ML193UHE SERIES UNITS

ML193UHE series units are high-efficiency gas furnaces manufactured with Lennox DuralokPlus™ aluminized steel clamshell-type heat exchangers, with a stainless steel condensing coil. ML193UHE units are available in heating input capacities of 30,000 to 110,000 Btuh (8.8 to 32.2 kW) and cooling applications from 2 through 5 tons (7.0 through 17.6 kW). Refer to Engineering Handbook for proper sizing.

Units are factory equipped for use with natural gas. A kit is available for conversion to LPG operation. All ML193UHE units are equipped with a hot surface ignition system. The gas valve is redundant to assure safety shut-off as required by C.S.A.

The heat exchanger, burners and manifold assembly can be removed for inspection and service. The maintenance section gives a detailed description on how this is done.

The ML193UHE can be “twinned” with a second unit. See twinning kit 16W72 for information for two units to operate as one, in a shared duct system controlled by a single thermostat. All specifications are subject to change. Procedures outlined in this manual are presented as a recommendation only and do not supersede or replace local or state codes.

⚠ WARNING

Electric shock hazard. Can cause injury or death. Before attempting to perform any service or maintenance, turn the electrical power to unit OFF at disconnect switch(es). Unit may have multiple power supplies.

⚠ WARNING

Improper installation, adjustment, alteration, service or maintenance can cause property damage, personal injury or loss of life. Installation and service must be performed by a licensed professional HVAC instale (or equivalent), service agency or the gas supplier.

⚠ CAUTION

As with any mechanical equipment, contact with sharp sheet metal edges can result in personal injury. Take care while handling this equipment and wear gloves and protective clothing.

Table of Contents

Specifications 2
Optional Accessories 4
Blower Performance Data 5
I-Unit Components 8
II Placement and Installation 22
III-Start-Up 41
IV-Heating System Service Checks 42
V-Typical Operating Conditions 46
VI-Maintenance 47
VII-Sequence of Operation and Flow Charts 50

©2016 Lennox Industries, Inc.

SPECIFICATIONS

	Model No.	ML193UH030XE36B	ML193UH045XE36B	ML193UH070XE36B	ML193UH090XE36C
Gas Heating Performance	AHRI Reference No.	20256877	20256878	20256879	20256880
	[1] AFUE	93%	93%	93%	93%
	Input - Btuh	30,000	44,000	66,000	88,000
	Output - Btuh	29,000	42,000	63,000	84,000
	Temperature rise range - °F	25 - 55	30 - 60	40 - 70	50 - 80
	Gas Manifold Pressure (in. w.g.) Nat. Gas / LPG/Propane	3.5 / 10	3.5 / 10.0	3.5 / 10.0	3.5 / 10
	High static - in. w.g.	0.5	0.5	0.5	0.5
Connections in.	Intake / Exhaust Pipe (PVC)	2 / 2	2 / 2	2 / 2	2 / 2
	Gas pipe size IPS	1/2	1/2	1/2	1/2
	Condensate Drain Trap (PVC pipe) - i.d.	3/4	3/4	3/4	3/4
	with furnished 90° street elbow	3/4 slip x 3/4 Mipt	3/4 slip x 3/4 Mipt	3/4 slip x 3/4 Mipt	3/4 slip x 3/4 Mipt
	with field supplied (PVC coupling) - o.d.	3/4 slip x 3/4 MPT	3/4 slip x 3/4 MPT	3/4 slip x 3/4 MPT	3/4 slip x 3/4 MPT
Indoor Blower	Wheel nom. dia. x width - in.	10 x 8	10 x 8	10 x 8	10 x 8
	Motor Type	DC Brushless	DC Brushless	DC Brushless	DC Brushless
	Motor output - hp	1/2	1/2	1/2	1/2
	Tons of add-on cooling	1.5 - 3	1.5 - 3	1.5 - 3	1.5 - 3
	Air Volume Range - cfm	175 - 1435	355 - 1420	355 - 1430	405 - 1410
Electrical Data	Voltage	120 volts - 60 hertz - 1 phase			
	Blower motor full load amps	6.8	6.8	6.8	6.8
	Maximum overcurrent protection	15	15	15	15
Shipping Data	lbs. - 1 package	120	120	127	144

NOTE - Filters and provisions for mounting are not furnished and must be field provided.

[1] Annual Fuel Utilization Efficiency based on DOE test procedures and according to FTC labeling regulations. Isolated combustion system rating for non-weatherized furnaces.

SPECIFICATIONS

	Model No.	ML193UH090XE48C	ML193UH110XE48C	ML193UH110XE60C
Gas Heating Performance	AHRI Reference No.	20256881	20256882	20256883
	[1] AFUE	93%	93%	93%
	Input - Btuh	88,000	110,000	110,000
	Output - Btuh	84,000	104,000	105,000
	Temperature rise range - °F	45 - 75	50 - 80	45 - 75
	Gas Manifold Pressure (in. w.g.) Nat. Gas / LPG/Propane	3.5 / 10.0	3.5 / 10	3.5 / 10
	High static - in. w.g.	0.5	0.5	0.5
Connections in.	Intake / Exhaust Pipe (PVC)	2 / 2	2 / 2	2 / 2
	Gas pipe size IPS	1/2	1/2	1/2
	Condensate Drain Trap (PVC pipe) - i.d.	3/4	3/4	3/4
	with furnished 90° street elbow	3/4 slip x 3/4 Mipt	3/4 slip x 3/4 Mipt	3/4 slip x 3/4 Mipt
	with field supplied (PVC coupling) - o.d.	3/4 slip x 3/4 MPT	3/4 slip x 3/4 MPT	3/4 slip x 3/4 MPT
Indoor Blower	Wheel nom. dia. x width - in.	10 x 10	10 x 10	11-1/2 x 10
	Motor Type	DC Brushless	DC Brushless	DC Brushless
	Motor output - hp	3/4	3/4	1
	Tons of add-on cooling	2.5 - 4	2.5 - 4	3 - 5
	Air Volume Range - cfm	830 - 1710	850 - 1750	1085 - 2150
Electrical Data	Voltage	120 volts - 60 hertz - 1 phase		
	Blower motor full load amps	8.4	8.4	10.9
	Maximum overcurrent protection	15	15	15
Shipping Data	lbs. - 1 package	144	156	158

NOTE - Filters and provisions for mounting are not furnished and must be field provided.

[1] Annual Fuel Utilization Efficiency based on DOE test procedures and according to FTC labeling regulations. Isolated combustion system rating for non-weatherized furnaces.

OPTIONAL ACCESSORIES

			"B" Width Models	"C" Width Models
CABINET ACCESSORIES				
Horizontal Suspension Kit - Horizontal only			**51W10**	**51W10**
Return Air Base - Upflow only			**50W98**	**50W99**
High Performance Economizer (Commercial Only)			**10U53**	**10U53**
CONDENSATE DRAIN KITS				
Condensate Drain Heat Cable		6 ft.	**26K68**	**26K68**
		24 ft.	**26K69**	**26K69**
Crawl Space Vent Drain Kit		US	**51W18**	**51W18**
		Canada	**15Z70**	**15Z70**
CONTROLS				
Blower Relay Kit (for two-stage outdoor units)			**85W66**	**85W66**
iComfort® M30 Smart Wi-Fi Thermostat			**15Z69**	**15Z69**
Remote Outdoor Temperature Sensor			**X2658**	**X2658**
Furnace Twinning Panel			**Y3653**	**Y3653**
Furnace Twinning Kit			**16W72**	**16W72**
FILTER KITS				
[1] **Air Filter and Rack Kit**	Horizontal (end)	Size of filter - in.	**87L96** - 18 x 25 x 1	**87L97** - 20 x 25 x 1
	Side Return	Single	**44J22**	**44J22**
		Ten Pack	**66K63**	**66K63**
		Size of filter - in.	16 x 25 x 1	16 x 25 x 1
NIGHT SERVICE KIT				
Night Service Kit			**84W48**	**84W48**
TERMINATION KITS				
See Installation Instructions for specific venting information.				
Direct Vent	Concentric	US - 2 in.	**71M80**	**69M29**
		3 in.	**- - -**	**60L46**
		Canada - 2 in.	**44W92**	**44W92**
		3 in.	**- - -**	**44W93**
	Flush-Mount	US - 2, 2-1/2 or 3 in.	**51W11**	**51W11**
		Canada - 2, 2-1/2 or 3 in.	**51W12**	**51W12**
	Wall - Close Couple	US - 2 in.	**22G44**	**- - -**
		3 in.	**44J40**	**44J40**
	Wall - Close Couple WTK	Canada - 2 in.	**30G28**	**- - -**
		3 in.	**81J20**	**81J20**
	Roof Termination Flashing Kit (no vent pipe - 2 flashings)	2 in.	**15F75**	**15F75**
		3 in.	**44J41**	**44J41**
VENTING				
Flue Coupling		2 in.	**17H92**	**17H92**

[1] Cleanable polyurethane frame type filter.

NOTE - Termination Kits (**44W92**, **44W93**, **30G28**, **51W12**, **81J20**) and Crawl Space Vent Drain Kit (**15Z70**) are certified to ULC S636 standard for use in Canada only.

BLOWER DATA

ML193UH030XE36B PERFORMANCE (Less Filter)

External Static Pressure in. w.g.	Air Volume / Watts at Various Blower Speeds									
	High (Black)		Medium-High (Brown)		Medium (Blue)		Medium-Low (Yellow)		Low (Red)	
	cfm	Watts	cfm	Watts	cfm	Watts	cfm	Watts	cfm	Watts
0.00	- - -	- - -	- - -	- - -	- - -	- - -	- - -	- - -	- - -	- - -
0.10	1333	338	1159	211	943	127	725	74	661	63
0.20	1311	344	1120	214	903	133	681	78	512	52
0.30	1270	350	1093	225	860	139	631	82	458	57
0.40	1244	358	1053	231	827	145	586	87	385	61
0.50	1223	369	1028	239	784	150	535	93	310	65
0.60	1191	376	993	247	747	156	472	98	- - -	- - -
0.70	1165	387	966	254	709	163	410	102	- - -	- - -
0.80	1138	395	929	261	669	168	351	107	- - -	- - -
0.90	1064	376	904	270	619	175	- - -	- - -	- - -	- - -
1.00	858	314	869	276	574	180	- - -	- - -	- - -	- - -

ML193UH045XE36B PERFORMANCE (Less Filter)

External Static Pressure in. w.g.	Air Volume / Watts at Various Blower Speeds									
	High (Black)		Medium-High (Brown)		Medium (Blue)		Medium-Low (Yellow)		Low (Red)	
	cfm	Watts	cfm	Watts	cfm	Watts	cfm	Watts	cfm	Watts
0.00	1413	333	1301	263	1157	191	929	108	778	71
0.10	1385	341	1270	270	1126	199	891	114	734	76
0.20	1357	349	1238	278	1096	206	853	120	690	81
0.30	1331	359	1209	286	1064	214	814	127	642	86
0.40	1304	369	1182	295	1031	221	776	133	596	92
0.50	1277	379	1151	303	1001	230	736	140	550	97
0.60	1251	385	1123	312	969	237	698	145	504	101
0.70	1227	397	1095	321	936	244	657	151	459	106
0.80	1208	412	1066	329	903	252	619	156	414	111
0.90	1158	403	1037	337	871	259	581	161	359	116
1.00	983	329	990	337	837	266	543	166	322	120

ML193UH070XE36B PERFORMANCE (Less Filter)

External Static Pressure in. w.g.	Air Volume / Watts at Various Blower Speeds									
	High (Black)		Medium-High (Brown)		Medium (Blue)		Medium-Low (Yellow)		Low (Red)	
	cfm	Watts	cfm	Watts	cfm	Watts	cfm	Watts	cfm	Watts
0.00	1448	304	1311	235	1177	170	939	100	805	65
0.10	1411	313	1280	245	1139	180	899	105	748	70
0.20	1374	322	1249	255	1101	190	859	110	691	75
0.30	1334	329	1220	263	1061	196	817	117	638	81
0.40	1305	339	1179	268	1029	201	770	123	580	86
0.50	1273	348	1156	278	994	212	720	128	531	91
0.60	1244	355	1123	288	950	217	677	135	476	96
0.70	1214	367	1084	294	916	223	627	142	423	100
0.80	1189	375	1045	302	889	233	581	145	366	105
0.90	1157	384	1016	310	842	239	538	151	- - -	- - -
1.00	1124	392	978	318	807	247	489	155	- - -	- - -

BLOWER DATA

ML193UH090XE36C PERFORMANCE (Less Filter)

External Static Pressure in. w.g.	Air Volume / Watts at Various Blower Speeds									
	High (Black)		Medium-High (Brown)		Medium (Blue)		Medium-Low (Yellow)		Low (Red)	
	cfm	Watts	cfm	Watts	cfm	Watts	cfm	Watts	cfm	Watts
0.00	1478	303	1358	236	1211	173	977	98	863	72
0.10	1447	313	1326	246	1177	182	935	105	794	74
0.20	1416	324	1293	256	1143	191	893	113	725	76
0.30	1389	335	1263	266	1109	200	852	119	680	82
0.40	1359	344	1234	276	1077	208	812	126	628	88
0.50	1321	362	1202	285	1042	217	770	133	578	94
0.60	1332	355	1170	294	1012	225	725	139	531	99
0.70	1302	363	1140	303	978	233	683	146	483	103
0.80	1274	374	1109	312	942	240	642	153	434	108
0.90	1244	383	1079	320	906	248	602	158	383	113
1.00	1214	392	1047	329	869	256	562	163	345	117

ML193UH090XE48C PERFORMANCE (Less Filter)

External Static Pressure in. w.g.	Air Volume / Watts at Various Blower Speeds									
	High (Black)		Medium-High (Brown)		Medium (Blue)		Medium-Low (Yellow)		Low (Red)	
	cfm	Watts	cfm	Watts	cfm	Watts	cfm	Watts	cfm	Watts
0.00	1743	385	1534	267	1411	212	1328	181	1203	141
0.10	1705	394	1492	277	1369	222	1283	190	1155	149
0.20	1668	404	1451	287	1326	232	1239	199	1107	157
0.30	1633	415	1413	297	1285	241	1195	208	1062	166
0.40	1598	426	1372	306	1241	250	1150	216	1008	174
0.50	1561	437	1333	316	1198	258	1103	224	956	181
0.60	1526	447	1293	326	1152	268	1054	233	904	188
0.70	1491	458	1248	335	1107	276	1005	241	859	195
0.80	1454	469	1207	344	1061	285	966	249	820	202
0.90	1432	489	1166	353	1026	292	926	256	779	209
1.00	1335	469	1129	363	987	300	888	264	729	217

ML193UH110XE48C PERFORMANCE (Less Filter)

External Static Pressure in. w.g.	Air Volume / Watts at Various Blower Speeds									
	High (Black)		Medium-High (Brown)		Medium (Blue)		Medium-Low (Yellow)		Low (Red)	
	cfm	Watts	cfm	Watts	cfm	Watts	cfm	Watts	cfm	Watts
0.00	1783	351	1579	240	1445	196	1328	165	1232	126
0.10	1736	364	1519	249	1386	204	1287	174	1169	134
0.20	1689	377	1459	258	1327	212	1246	183	1106	142
0.30	1654	390	1429	273	1283	223	1198	191	1055	151
0.40	1607	401	1390	282	1252	232	1145	198	1003	159
0.50	1566	414	1344	290	1196	238	1088	206	944	165
0.60	1538	423	1291	298	1151	246	1045	217	889	174
0.70	1492	432	1248	307	1097	254	1000	224	843	182
0.80	1455	446	1210	316	1059	265	944	231	781	188
0.90	1415	455	1160	324	1010	273	894	239	717	197
1.00	1379	464	1124	336	953	281	841	247	655	204

ML193UH110XE60C PERFORMANCE (Less Filter)

External Static Pressure in. w.g.	Air Volume / Watts at Different Blower Speeds																			
	Bottom Return Air, Side Return Air with Return Air from Both Sides or Return Air from Bottom and One Side.										**Single Side Return Air** − Air volumes in **bold** (over 1800 cfm) require Optional Return Air Base and field fabricated transition to accommodate 20 x 25 x 1 in. air filter in order to maintain proper air velocity.									
	High (Black)		Medium-High (Brown)		Medium (Blue)		Medium-Low (Yellow)		Low (Red)		High (Black)		Medium-High (Brown)		Medium (Blue)		Medium-Low (Yellow)		Low (Red)	
	cfm	Watts	cfm	Watts	cfm	Watts	cfm	Watts	cfm	Watts	cfm	Watts	cfm	Watts	cfm	Watts	cfm	Watts	cfm	Watts
0.00	2142	574	1881	406	1740	313	1630	268	1455	196	2105	568	1874	404	1717	312	1599	262	1429	197
0.10	2095	585	1850	417	1691	326	1576	277	1405	206	2070	588	1838	418	1671	325	1563	276	1382	207
0.20	2048	597	1820	429	1642	340	1523	286	1355	216	2034	608	1802	432	1625	338	1527	289	1336	217
0.30	2019	617	1774	446	1600	352	1479	297	1299	225	1998	624	1760	448	1583	350	1473	302	1288	227
0.40	1991	631	1727	456	1566	364	1427	309	1250	235	1959	636	1711	459	1538	363	1434	312	1245	237
0.50	1942	647	1692	469	1518	376	1398	321	1200	245	1924	653	1675	471	1482	371	1386	323	1188	247
0.60	1903	658	1655	483	1473	387	1350	332	1151	255	1899	669	1639	484	1448	384	1343	334	1139	253
0.70	1868	673	1609	493	1431	398	1307	341	1106	264	1851	682	1592	493	1409	398	1302	345	1089	262
0.80	1840	687	1569	505	1386	407	1270	353	1055	275	1812	695	1557	509	1368	407	1262	355	1042	272
0.90	1796	703	1539	519	1335	419	1223	363	1006	283	1772	706	1519	521	1327	419	1217	365	996	283
1.00	1767	719	1491	528	1299	428	1182	372	938	291	1741	724	1472	529	1284	430	1166	375	945	292

PARTS IDENTIFICATION

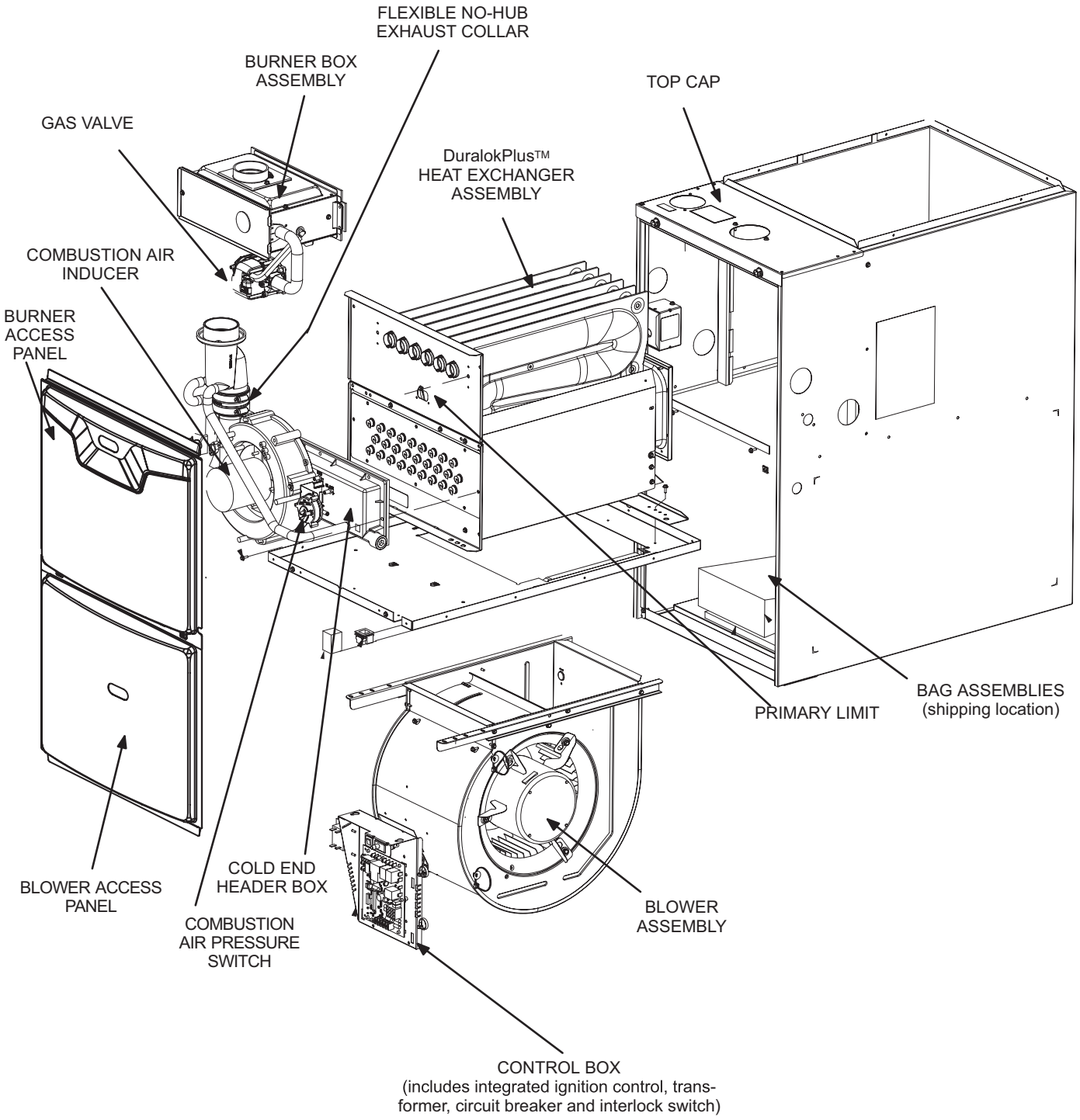

FIGURE 1

I-UNIT COMPONENTS

ELECTROSTATIC DISCHARGE (ESD)
Precautions and Procedures

⚠ CAUTION

Electrostatic discharge can affect electronic components. Take precautions to neutralize electrostatic charge by touching your hand and tools to metal prior to handling the control.

ML193UHE unit components are shown in FIGURE 1. The combustion air inducer, gas valve and burners can be accessed by removing the burner access panel. The blower and control box can be accessed by removing the blower access door.

A-Control Box Components (FIGURE 2)

Unit transformer (T1) and integrated ignition control (A92) are located in the control box. In addition, a door interlock switch (S51) is located in the control box.

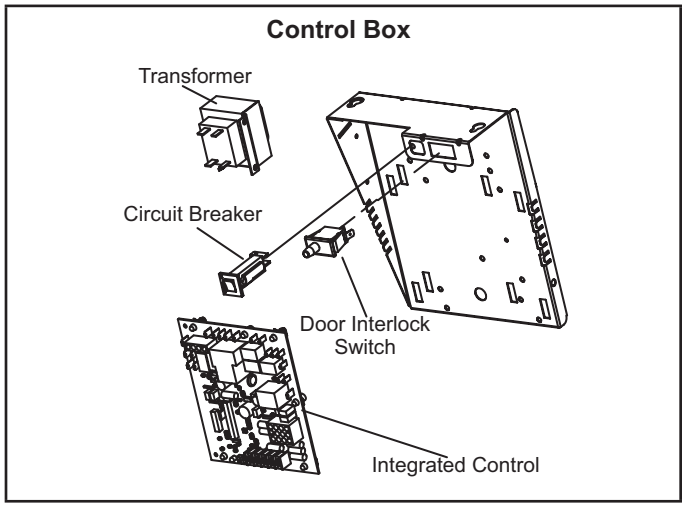

FIGURE 2

1. Transformer (T1)

A transformer located in the control box provides power to the low voltage section of the unit. The transformers on all models are rated at 40VA with a 120V primary and 24V secondary.

⚠ IMPORTANT

When matching this gas furnace with zoning, defrost tempering stat or other 24V accessories, It is recommended to replace the factory installed transformer with kit 27J32.

Kit 27J32 contains a 75VA transformer, so you do not overload the original 40VA transformer.

2. Door Interlock Switch (S51)

A door interlock switch rated 14A at 120VAC is located on the control box. The switch is wired in series with line voltage. When the blower door is removed the unit will shut down.

3. Circuit Breaker (CB8)

A 24V circuit breaker is also located in the control box. The switch provides overcurrent protection to the transformer (T1). The breaker is rated at 3A at 32V. If the current exceeds this limit the breaker will trip and all unit operation will shutdown. The breaker can be manually reset by pressing the button on the face.

4. Integrated Ignition Control (A92)

103217-03 & 107163-01

⚠ WARNING

Shock hazard.

Disconnect power before servicing. Control is not field repairable. If control is inoperable, simply replace entire control.

Can cause injury or death. Unsafe operation will result if repair is attempted.

The hot surface ignition control system consisting of an integrated control (FIGURE 3 or FIGURE 5) with control terminal designations in TABLE 1, TABLE 2, TABLE 3, sensor and ignitor (FIGURE 6). The integrated control and ignitor work in combination to ensure furnace ignition and ignitor durability. The integrated control, controls all major furnace operations. The integrated control also features a RED LED for troubleshooting and two accessory terminals rated at (1) one amp. The nitride ignitor is made from a non-porous, high strength proprietary ceramic material that provides long life and trouble free maintenance.

TABLE 1

4-Pin Terminal Designation	
PIN #	FUNCTION
1	Combustion Air Inducer Line
2	Ignitor Line
3	Combustion Air Inducer Neutral
4	Ignitor Neutral

TABLE 2

12-Pin Terminal Designations	
PIN #	FUNCTION
1	High Limit Output
2	IFC 103217-03 Not Used IFC 107163-01 Flame Sense
3	24V Line
4	Not Used
5	Rollout Switch Out
6	24V Neutral
7	High Limit Input
8	Ground
9	Gas Valve Common
10	Pressure Switch In
11	Rollout Switch In
12	Gas Valve Out

TABLE 3

1/4” Quick Connect Terminals	
120HUM	Humidifier 120VAC
LINE	120VAC
XFMR	Transformer 120VAC
CIRC	Indoor blower 120VAC
EAC	Indoor air quality accessory 120VAC
NEUTRALS	Common 120VAC
HUM24	Humidifier 24VAC
3/16” Quick Connect Terminals	
COOL	Cooling tap 24VAC
HEAT	Heating tap 24VAC
FAN	Continuous blower 24 VAC
PARK (no power)	Park terminal for speed taps
FS	Flame sense
24 COM	Common 24VAC

TABLE 4

Ignition Control 103217-03

RED LED Flash Code [2]	Diagnostic Codes / Status of Furnace
Off	No power to control or board fault detected
Heartbeat[1]	Normal Operation - Idle, Continuous Fan, Cool
Continuous Rapid Flash	Call For Heat / Burner Operation
1	Reverse Line Voltage Polarity
2	Improper Earth Ground
3	Burner failed to light, or lost flame during heat demand
4	Low Flame Signal - check flame sensor
5	Watchguard - burner failed to light, exceeded maximum number of retries or recycles.
6	Not Used
7	Primary or Secondary Limit Open or Watchguard Mode - Limit Switch Open longer than 3 minutes
8	Rollout Switch Open
9	Pressure Switch failed to close or opened during heat demand
10	Watchguard - Pressure Switch opened 5 times during one heat demand
11	Pressure Switch stuck closed prior to activation of combustion air inducer
12	Flame Sensed without gas valve energized
13	Low Line Voltage
Notes	
Note - 1	A ”Heartbeat” is indicated by a ”Slow Flash” - 1 sec on 1 sec off, repeating
Note - 2	Error codes are indicated by a “rapid flash” - the LED flashes X times at ½ second on ½ second off, remains off for 3 seconds then repeats.
Note - 3	Last 10 error codes are stored in memory including when power is shut off to the unit. - To recall, pressand release button, most recent will be displayed first, LED off for 3 sec, then next error code is displayed, etc. To clear error codes, depress and hold button longer than 5 seconds.

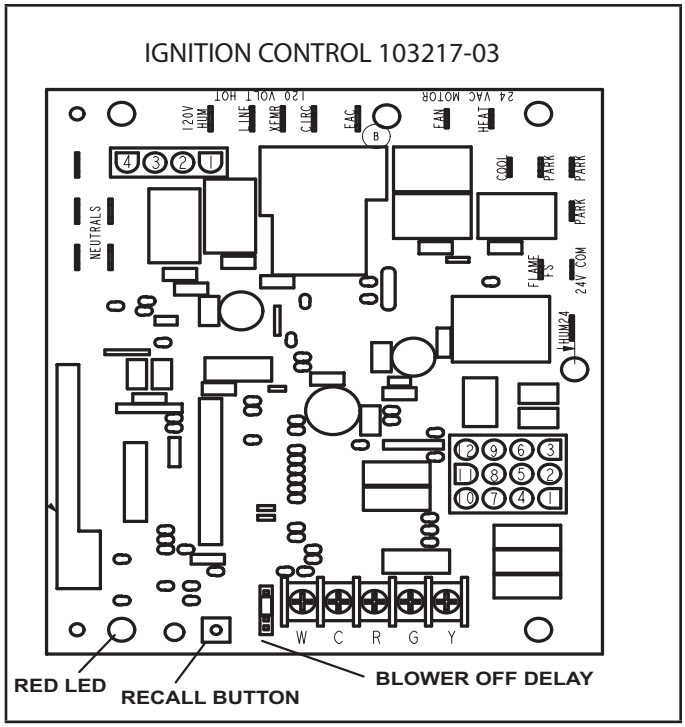

FIGURE 3

Electronic Ignition

On a call for heat the integrated control monitors the combustion air inducer pressure switch. The control board will not begin the heating cycle if the pressure switch is closed (by-passed). Once the pressure switch is determined to be open, the combustion air inducer is energized. When the differential in the pressure switch is great enough, the pressure switch closes and a 15-second pre-purge begins. If the pressure switch is not proven within 2-1/2 minutes, the integrated control goes into Watchguard-Pressure Switch mode for a 5-minute re-set period.

After the 15-second pre-purge period, the ignitor warms up for 20 seconds during which the gas valve opens at 19 seconds for a 4-second trial for ignition. The ignitor remains energized for the first 3 seconds during the 4 second trial. If ignition is not proved during the 4-second period, the integrated control will try four more times with an inter purge and warm-up time between trials of 35 seconds. After a total of five trials for ignition (including the initial trial), the integrated control goes into Watchguard-Flame Failure mode. After a 60-minute reset period, the integrated control will begin the ignition sequence again.

Fan Time Control - Ignition Control 103217-03

Heating Fan On Time

The fan on time of 30 seconds is not adjustable.

Heating Fan Off Time

Fan off time (time that the blower operates after the heat demand has been satisfied) can be adjusted by moving the jumper to a different setting. The unit is shipped with a factory fan off setting of 90 seconds. For customized comfort, monitor the supply air temperature once the heat demand is satisfied. Note the supply air temperature at the instant the blower is de-energized.

Adjust the fan-off delay to achieve a supply air temperature between 90° - 110° at the instant the blower is de-energized. (Longer delay times allow for lower air temperature, shorter delay times allow for higher air temperature). See FIGURE 4.

Cooling Fan On Time

The fan on time is 2 seconds and is not adjustable.

Cooling Fan Off Time

The control has a 45 second fan off delay after cooling demand has been met. This delay is factory set and not adjustable.

HEAT FAN-OFF TIME IN SECONDS

JUMPER POSITION		HEAT OFF DELAY
PIN1	PIN2	60
PIN2	PIN3	90
PIN3	PIN4	120
PIN4	PIN5	180
NO JUMPER		180

To adjust fan-off timing, reposition jumper across pins to achieve desired setting.

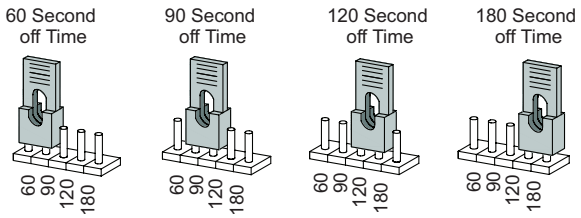

FIGURE 4

TABLE 5
Ignition Control 107163-01

RED LED Flash Code	Diagnostic Codes / Status of Furnace
Off	No Power to Control or Board Fault Detected
On	Board Fault Detected
Fast Heartbeat[3]	Call for Heat / Burner Operation
Slow Heartbeat[1]	Normal Operation – Idle, Continuous Fan, or Cool
1 Flash[2]	Reverse Line Voltage Polarity or Phasing of 120V power
2 Flashes[2]	Improper earth ground
3 Flashes[2]	Burner failed to light, or lost flame during heat demand
4 Flashes[2]	Low flame signal – check flame sensor
5 Flashes[2]	Watchguard – burner failed to light, exceeded maximum number of retries/recycles, 1 hour lockout
6 Flashes[2]	Not used
7 Flashes[2]	Primary or Secondary limit switch open or Watchguard mode – Limit Switch open longer than 3 minutes
8 Flashes[2]	Roll-out Switch Open
9 Flashes[2]	Pressure Switch failed to close or opened during heat demand, inducer on
10 Flashes[2]	Watchguard - Pressure switch opened 5 times during a single heating demand
11 Flashes[2]	Pressure switch stuck closed prior to activation of Combustion Air Inducer
12 Flashes[2]	Flame sensed without gas valve energized
13 Flashes[2]	Low line voltage
Notes	
Note - 1	A slow heartbeat is indicated by 1s on / 1s off. It is used for idle, continuous fan and cool modes.
Note - 2	Error codes are indicated by a “rapid flash” - the LED flashes X times at ½ second on ½ second off, remains off for 3 seconds then repeats.
Note - 3	A fast heartbeat is indicated by 0.5s on / 0.5s off. It is only used during a heat call.
Note - 4	Last 10 error codes are stored in memory including when power is shut off to the unit. - To recall, press, and release button, most recent will be displayed first, LED off for 3 sec, then next error code is displayed, etc. To clear error codes, depress and hold button longer than 5 seconds.

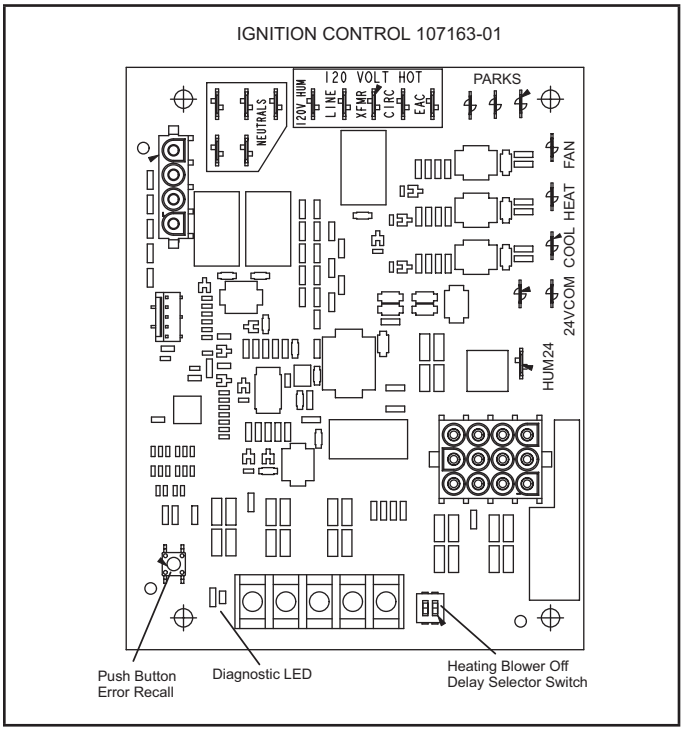

FIGURE 5

Ignition Control 107163-01

The heat fan-on time of 30 seconds is not adjustable. The cool fan-on time of 2 seconds is not adjustable. The heat fan-off delay (amount of time that the blower operates after the heat demand has been satisfied) may be adjusted by changing the two position dip switch on the integerated control, to one of four selections. Blower off delay is factory set at 90 seconds. For other blower off delay settings, please refer to the following chart:

Blower Delay Select		
	SW2-1	SW2-2
60	OFF	ON
90	OFF	OFF
120	ON	OFF
180	ON	ON
Factory Setting is 90		

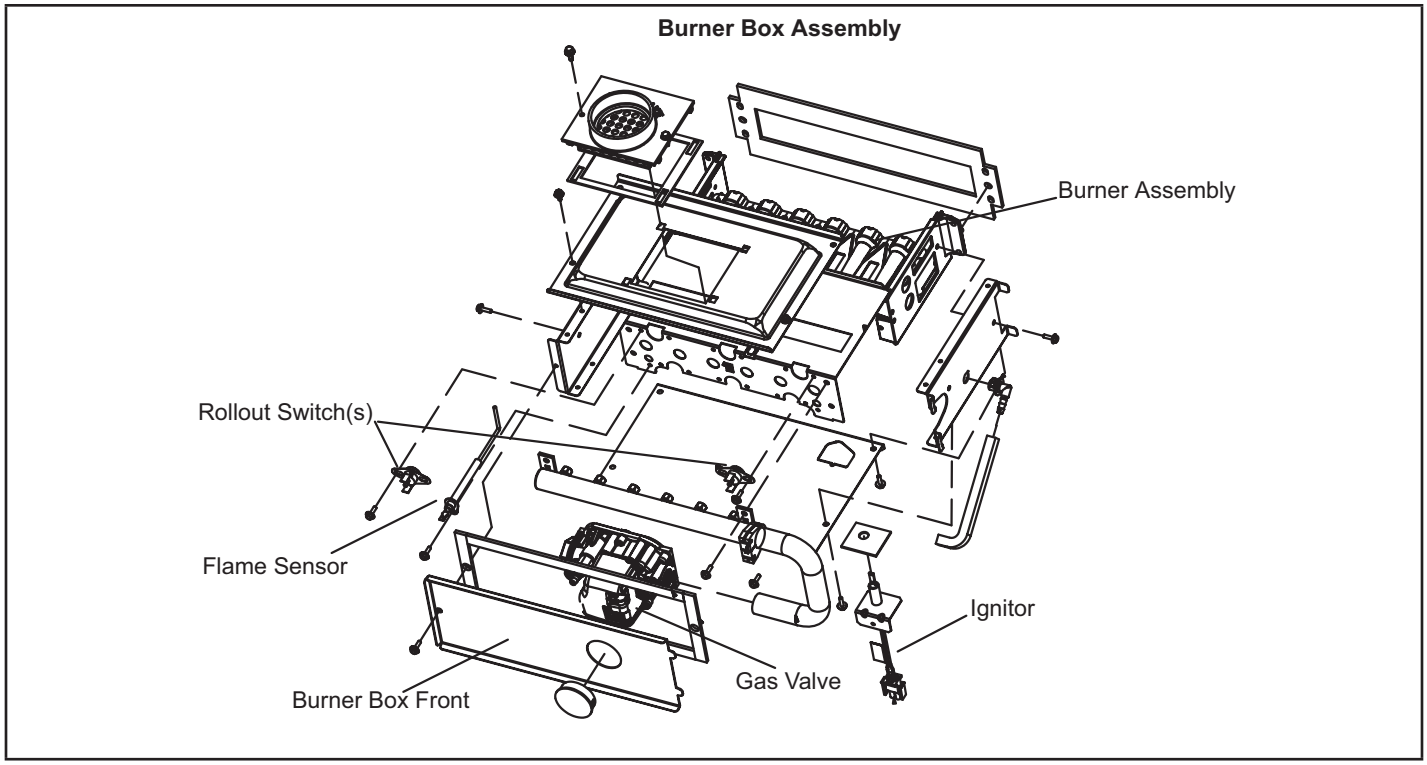

FIGURE 6

B-Heating Components

Combustion air inducer (B6), primary limit control (S10), ignitor, burners, flame rollout switch (S47), gas valve (GV1), combustion air pressure switch (S18), and heat exchangers are located in the heating compartment. The heating compartment can be accessed by removing the outer access panel.

1. Flame Rollout Switches (FIGURE 6)

Flame rollout switches S47 are SPST N.C. high temperature limits located on the left and right of the front buner box plate. S47 is wired to the burner ignition control A92. When either of the switches sense flame rollout (indicating a blockage in the combustion passages), the flame rollout switch trips, and the ignition control immediately closes the gas valve. Switch S47 in all ML196UHE units is factory preset to open at 210F + 12F (99C + 6.7C) on a temperature rise. All flame rollout switches are manual reset. See table 4 flash code 8 for troubleshooting.

2. Heat Exchanger (FIGURE 7)

ML193UHE units use an aluminized steel primary and stainless steel secondary heat exchanger assembly. Heat is transferred to the air stream from all surfaces of the heat exchanger. The shape of the heat exchanger ensures maximum efficiency.

The combustion air inducer pulls fresh air through the burner box. This air is mixed with gas in the burners. The gas / air mixture is then burned at the entrance of each clamshell. Combustion gases are then pulled through the primary and secondary heat exchangers and exhausted out the exhaust vent pipe.

3. Primary Limit Control (FIGURE 7)

Primary limit (S10) used on ML193UHE units is located in the heating vestibule panel. When excess heat is sensed in the heat exchanger, the limit will open. Once the limit opens, the furnace control energizes the supply air blower and de-energizes the gas valve. The limit automatically resets when unit temperature returns to normal. The switch is factory set and cannot be adjusted. For limit replacement remove wires from limit terminals, remove mounting screws, rotate limit switch 90 degrees and slowly remove from the vestibule panel. Install replacement limit with same care. See TABLE 4 or TABLE 5 flash code 7 for troubleshooting if limit switch opens during operation.

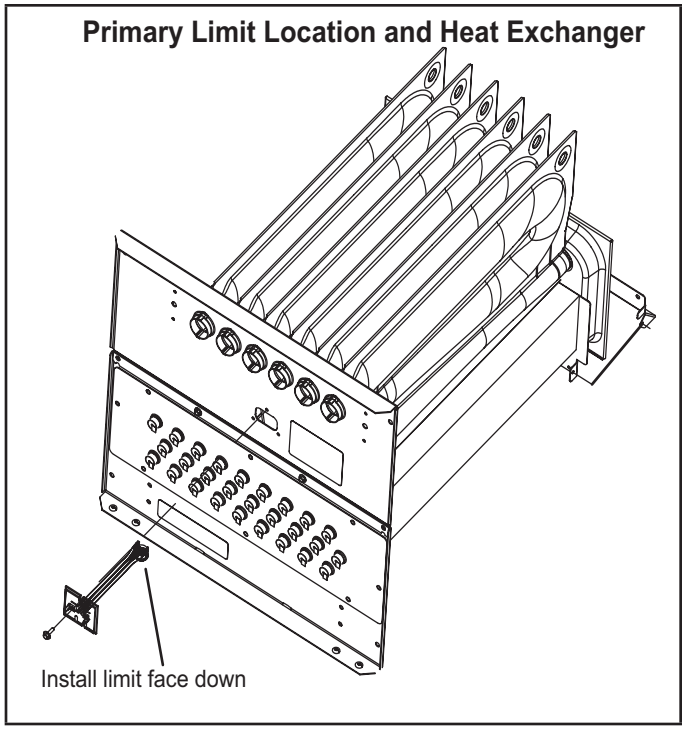

FIGURE 7

4. Gas Valve (FIGURE 8)

The ML193UHE uses an internally redundant valve to assure safety shut-off. If the gas valve must be replaced, the same type valve must be used.

24VAC terminals and gas control switch are located on top of the valve. All terminals on the gas valve are connected to wires from the ignition control. 24V applied to the terminals opens the valve.

Inlet and outlet pressure taps are located on the valve. A manifold adjustment screw is also located on the valve. An LP/Propane changeover kit is available.

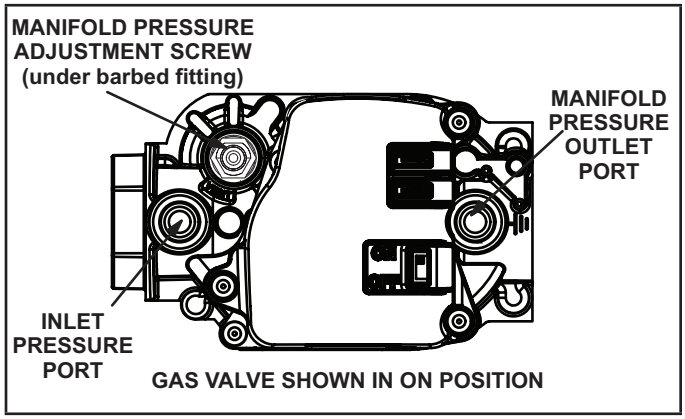

FIGURE 8

5. Flame Sensor (FIGURE 6)

A flame sensor is located on the left side of the burner support. The sensor is mounted on the front burner box plate and the tip protrudes into the flame envelope of the leftmost burner. The sensor can be removed for service (use steel wool only to clean) without removing any part of the burners. During operation, flame is sensed by current passed through the flame and sensing electrode. The ignition control allows the gas valve to remain open as long as flame signal is sensed.

NOTE - *The ML193UHE is polarity sensitive. Make sure that the furnace is wired correctly and is properly grounded.*

A microamp DC meter is needed to check the flame signal on the integrated control.

Flame (microamp) signal is an electrical current which passes from the integrated control to the sensor during unit operation.

Current passes from the sensor through the flame to ground to complete a safety circuit.

To Measure Flame Signal - Integrated Control:

Use a digital readout meter capable of reading DC microamps.

See FIGURE 9 for flame signal check.

1 - Set the meter to the DC amps scale.
2 - Turn off supply voltage to control.
3 - Remove sensor wire from integrated control.
4 - Connect (-) lead to flame sensor wire.
5 - Connect (+) lead to Terminal FS on integrated control.
6 - Turn supply voltage on and close thermostat contacts to cycle system.
7 - When main burners are in operation for two minutes, take reading.

6. Ignitor (FIGURE 6)

ML193UHE units use a nitride ignitor made from a proprietary ceramic material. To check ignitor, measure its resistance and voltage. A value of 39 to 70 ohms indicates a good ignitor. Voltage to the ignitor should be 102 - 132VAC. See FIGURE 10 for resistance and voltage checks.

Measuring Flame Signal

Flame Signal In Microamps

Normal	Low	Drop Out
$\geq$ 1.5	0.5 - 1.4	$\leq$ 0.4

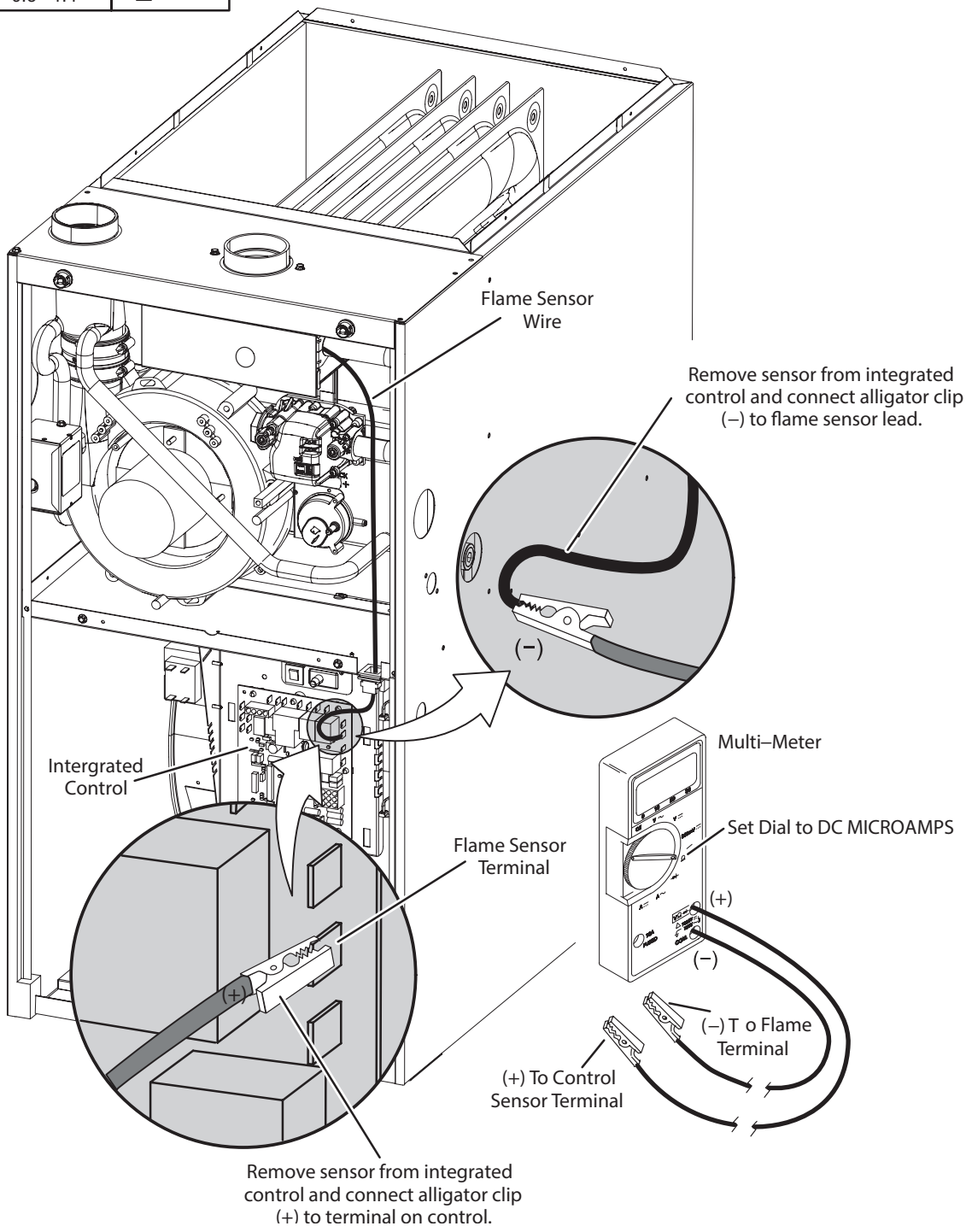

FIGURE 9

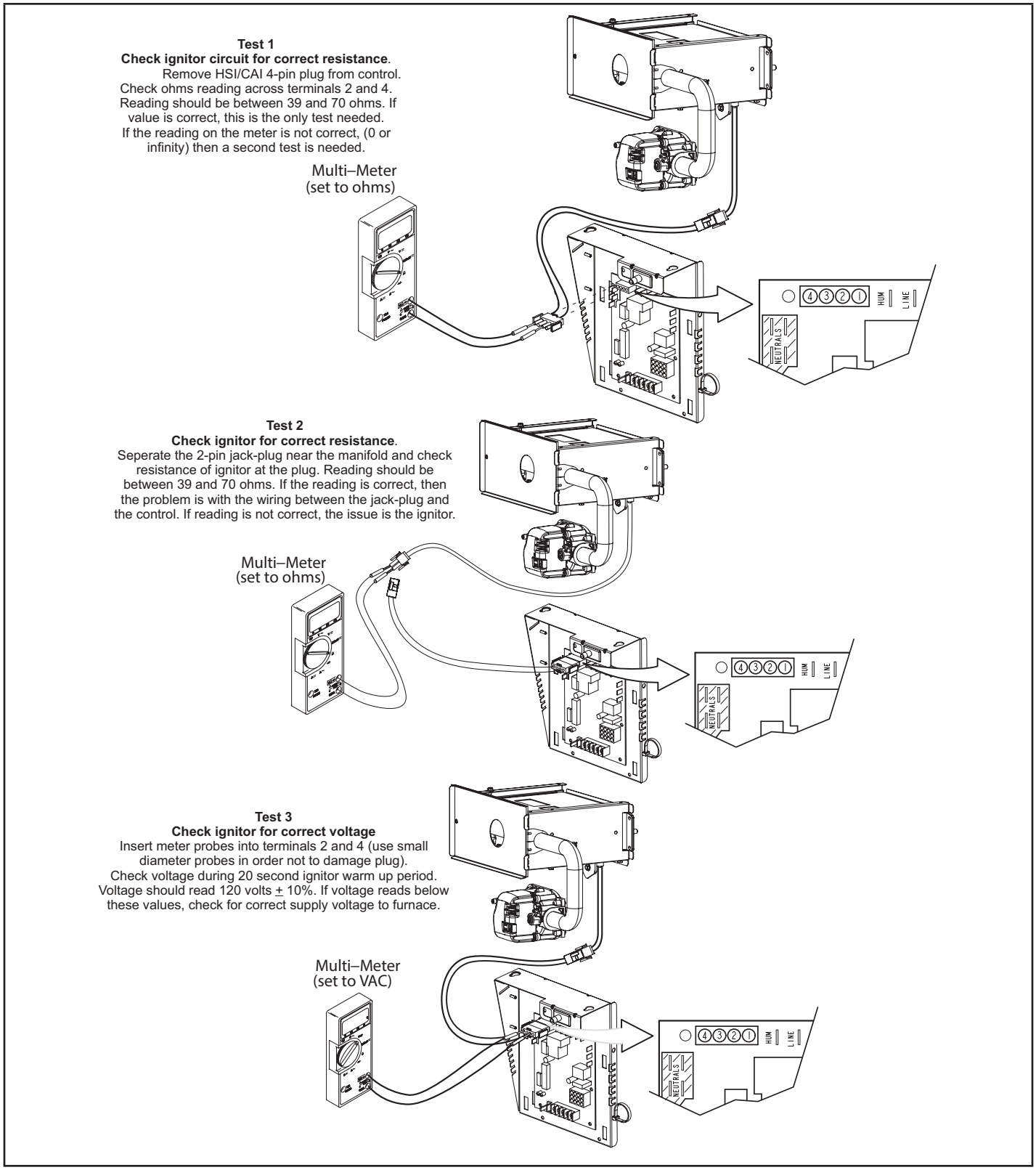
Test 1
Check ignitor circuit for correct resistance.
Remove HSI/CAI 4-pin plug from control.
Check ohms reading across terminals 2 and 4.
Reading should be between 39 and 70 ohms. If value is correct, this is the only test needed.
If the reading on the meter is not correct, (0 or infinity) then a second test is needed.
Multi–Meter (set to ohms)
4 3 2 1
HUM
LINE
NEUTRALS
Test 2
Check ignitor for correct resistance.
Seperate the 2-pin jack-plug near the manifold and check resistance of ignitor at the plug. Reading should be between 39 and 70 ohms. If the reading is correct, then the problem is with the wiring between the jack-plug and the control. If reading is not correct, the issue is the ignitor.
Multi–Meter (set to ohms)
4 3 2 1
HUM
LINE
NEUTRALS
Test 3
Check ignitor for correct voltage
Insert meter probes into terminals 2 and 4 (use small diameter probes in order not to damage plug).
Check voltage during 20 second ignitor warm up period.
Voltage should read 120 volts ± 10%. If voltage reads below these values, check for correct supply voltage to furnace.
Multi–Meter (set to VAC)
4 3 2 1
HUM
LINE
NEUTRALS

FIGURE 10

7. Combustion Air Inducer & Cold End Header Box

All ML193UHE units use a combustion air inducer (B6) to move air through the burners and heat exchanger during heating operation. The blower uses a shaded pole 120VAC motor. The motor operates during all heating operation and is controlled by integrated control A92. Blower operates continuously while there is a call for heat. The integrated control will not proceed with the ignition sequence until combustion air inducer operation is sensed by the proving switches.

The combustion air inducer is installed on the cold end header box. The cold end header box is a single piece made of hard plastic. The box has an internal channel where the combustion air inducer creates negative pressure at unit start up. The channel contains an orifice used to regulate flow created by the combustion air inducer.

The box has pressure taps for the combustion air inducer pressure switch hoses. The pressure switch measures the pressure across the combustion air inducer orifice or difference in the channel and the box. ***If replacement is necessary the gaskets used to seal the box to the vestibule panel and the combustion air inducer to the box, must also be replaced.***

TABLE 6

Unit	Combustion Air Inducer Orifice Size
-030	0.525”
-045	0.700”
-070	1.025”
-090	1.200”
-110	1.406”

8. Combustion Air Pressure Switch (FIGURE 11)

ML193UHE series units are equipped with a differential pressure switch located on the cold end header box. The switch monitors across the combustion air inducer orifice to insure proper flow through the heat exchanger.

The switch is a SPST N.O. pressure switch electrically connected to the integrated control. The purpose of the switch is to prevent burner operation if the combustion air inducer is not moving enough air for proper combustion.

On start-up, the switch monitors whether the combustion air inducer is operating. It closes a circuit to the integrated control when the difference in pressure across the combustion air inducer orifice exceeds a non-adjustable factory setting. If the switch does not successfully sense the required differential, the switch cannot close and the furnace cannot operate.

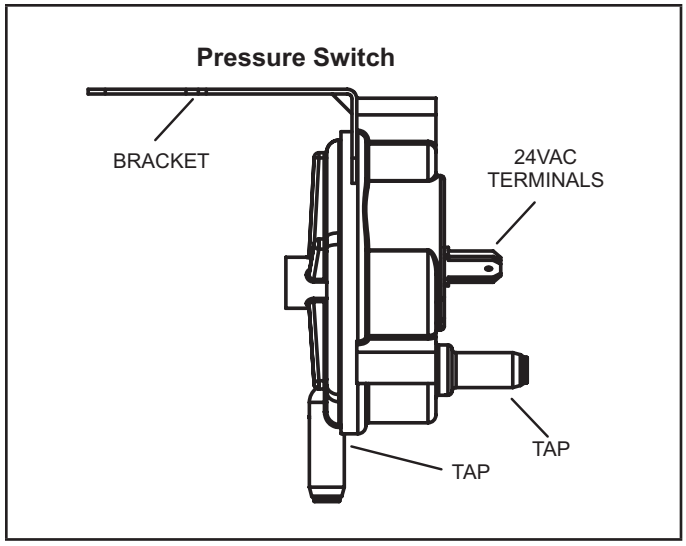

FIGURE 11

If the flue or air inlet become obstructed during operation, the switch senses a loss of pressure differential and opens the circuit to the integrated control. If the condensate line is blocked, water will back up into the header box and reduce the pressure differential across the switch. The pressure switch opens if the differential drops below the set point. See TABLE 7.

Checks of pressure differential can aid in troubleshooting. When measuring the pressure differential, readings should be taken at the pressure switch. See FIGURE 12 and TABLE 8. Lack of differential usually indicates problems in the intake or exhaust piping, but may indicate problems in the heat exchanger, condensing coil, header boxes, combustion inducer or other components.

TABLE 7

Unit	Altitude Ft		
	0-4500	4501-7500	7501-10000
	Set Point “w.c.	Set Point “w.c.	Set Point “w.c.
-030	-0.65	-0.60	-0.55
-045			
-070			
-090			
-110			

**Set point is factory set and non-adjustable.*

Measuring Pressure Differential

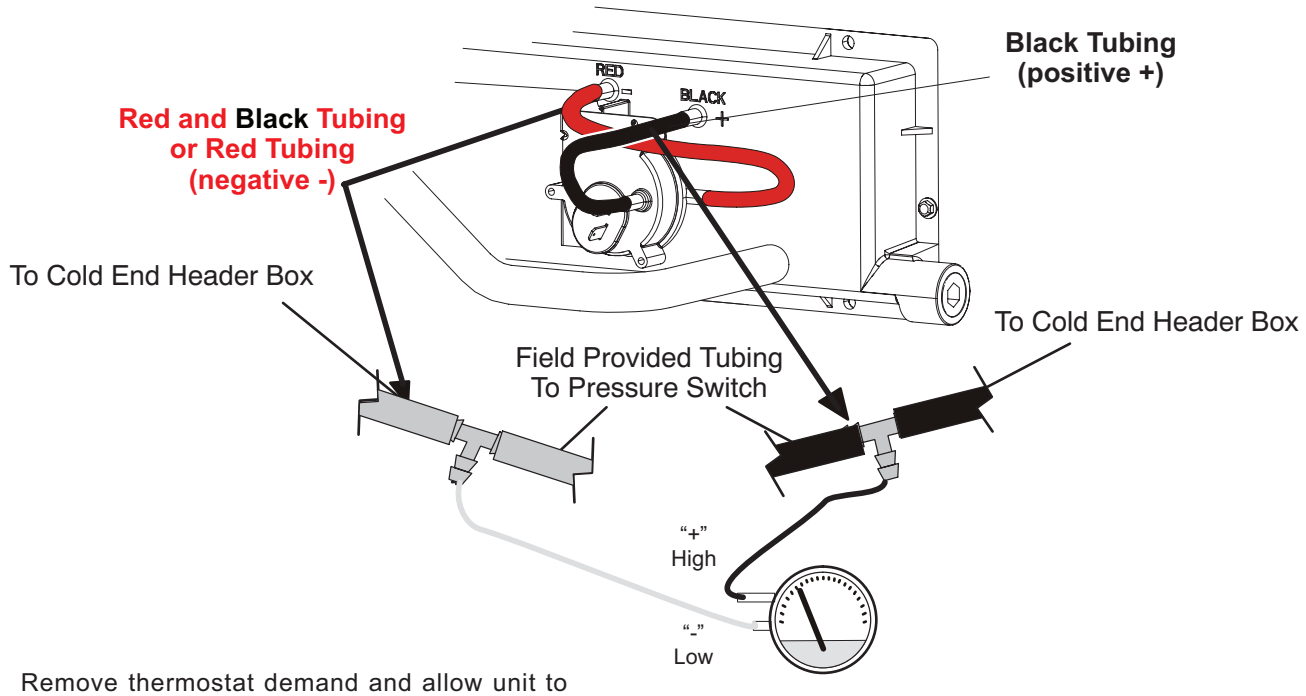

1 - Remove thermostat demand and allow unit to cycle off.

2 - Install a tee in the negative (-) line (red and black tubing or red tubing) and a tee in the positive (+) line (black tubing) running from the pressure switch to the cold end header box.

3 - Install a manometer with hose from the negative (-) side of the manometer to the tee installed in the negative (-) line and with hose from the positive (+) side of the manometer to the tee in the positive (+) line.

NOTE - Both sides of the cold end header box are negative. However the (+) port reads less negative pressure than the (-) port.

4 - Operate unit and observe manometer reading. *Readings will change as heat exchanger warms.*
a. Take one reading immediately after start-up.
b. Take a second reading after unit has reached steady state (approximately 5 minutes). This will be the pressure differential.

The pressure differential should be greater than those listed in table 7.

5 - Remove thermostat demand and allow to cycle off.

6 - Remove manometer and tee's. Reinstall combustion air sensing hoses to the pressure switch.

FIGURE 12

TABLE 8

Problem	Corrective Action
Pressure switch stuck closed	Check that the pressure switch is open without the combustion air inducer operating. Replace if defective.
Pressure switch does not close due to obstruction in vent pipe.	Check for restricted vent. Remove all blockage. Check for proper vent sizing. See table 13.
Pressure switch does not close due to incorrect routing of the pressure switch tubing.	Check that the pressure switch tubing is correctly routed. Correctly route pressure witch line.
Pressure switch does not close due to obstructions in the pressure switch line.	Remove any obstructions from the the pressure switch line and/or taps
Pressure switch tubing damaged.	Check pressure switch tubing for leaks. Replace damaged tubing if necessary.
Condensate in pressure switch tubing.	Check pressure switch tubing for condensate. Remove condensate from tubing.
Pressure switch does not close due to a low differential pressure across the pressure switch.	Check the differential pressure across the pressure switch. Check for restricted inlet vent. Remove all blockage. Check for proper vent sizing and run length.
Wrong pressure switch installed in the unit, or pressure switch is out of calibration	Check that the correct pressure switch is installed in the unit. Replace pressure switch if necessary.
Miswiring of furnace or improper connections at pressure switch.	Check for correct wiring and loose connections. Correct wiring and/or replace any loose connections.
Pressure switch failure.	If all the above modes of failure have been checked, the pressure switch may have failed. Replace pressure switch and determine if unit will operate.
Damaged condensate trap.	Check trap for any cracks or damage and replace if necessary.
Cold end header box does not drain properly.	Check that the furnace is set properly with a slight tilt (0 - 1/2”) towards the front if necessary. See furnace installation instruction.
Air leakage around the combustion air inducer gasket.	Check gasket and replace if necessary.
Air leakage around the cold end header box gasket.	Check gasket and replace if necessary.
Damaged cold end header box tubing.	Check tubing and replace if necessary.

C- Blower Compartment

⚠ IMPORTANT

Each blower is statically and dynamically balanced as an assembly before installation in the unit.

ML193UHE units are equipped with a constant torque ECM motor. It has a DC motor coupled to an electronic control module both contained in the same motor housing. The motor is programmed to provide constant torque at each of the five selectable speed taps. Each tap requires 24 volts to energize.

Input Voltage Requirements

The circuit is designed to be operated with AC voltage. To enable a tap requires 12 to 33VAC. Expected current draw will be less than 20mA.

Troubleshooting the Motor

Troubleshooting the motor is an easy process. Follow steps below.

1- Shut off power to unit.

2- Remove input connectors J48 and J49 from motor. See FIGURE 16 for troubleshooting procedure.

Note - *FIGURE 16 is a typical ignition control illustration.*

If correct voltage is present in tests 1 and 2 and motor is not operating properly, replace motor. The motor is not field repairable.

If replacing the indoor blower motor or blower wheel is necessary, placement is critical. The blower wheel must be centered in the blower housing as shown in FIGURE 13. When replacing the indoor blower motor the set screw must be aligned and tightened with the motor shaft as shown in FIGURE 14.

9. Secondary Limit Controls

The secondary limit is located in the blower compartment on the back side of the blower housing. See FIGURE 15. When excess heat is sensed in the blower compartment, the limit will open. If the limit is open, the furnace control energizes the supply air blower and closes the gas valve. The limit automatically resets when unit temperature returns to normal. The secondary limit cannot be adjusted.

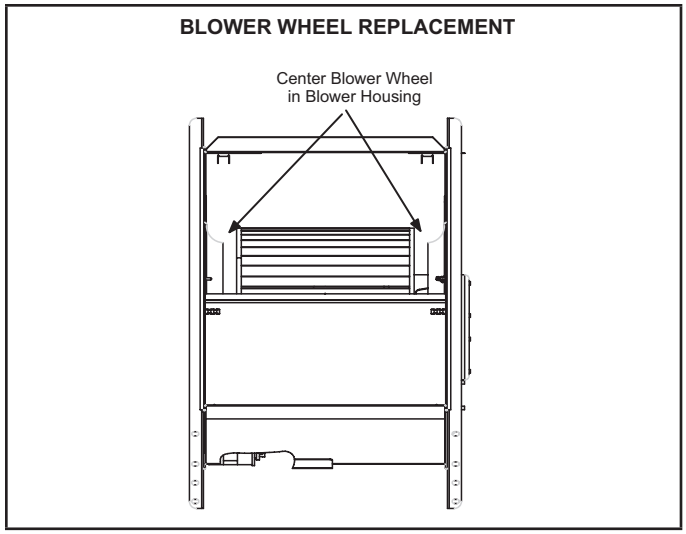

FIGURE 13

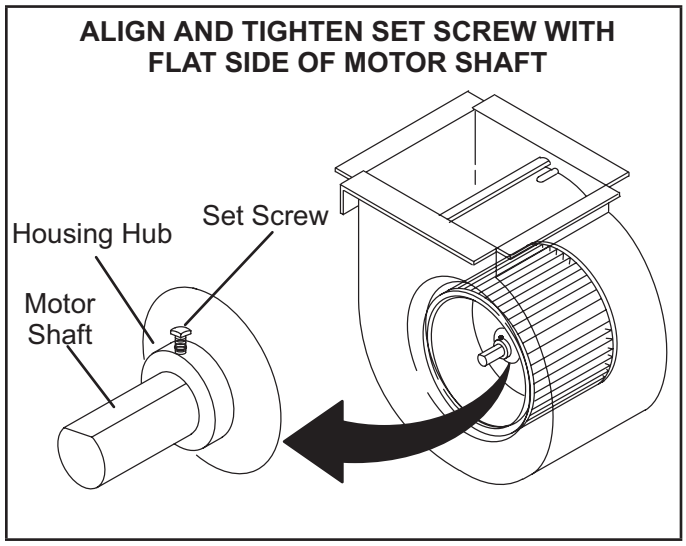

FIGURE 14

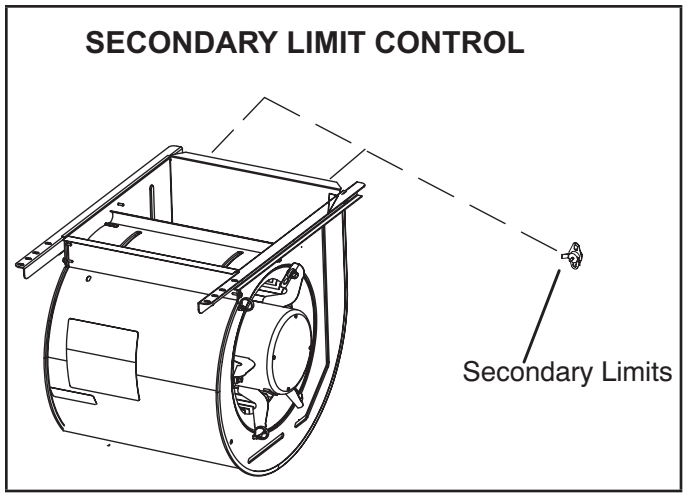

FIGURE 15

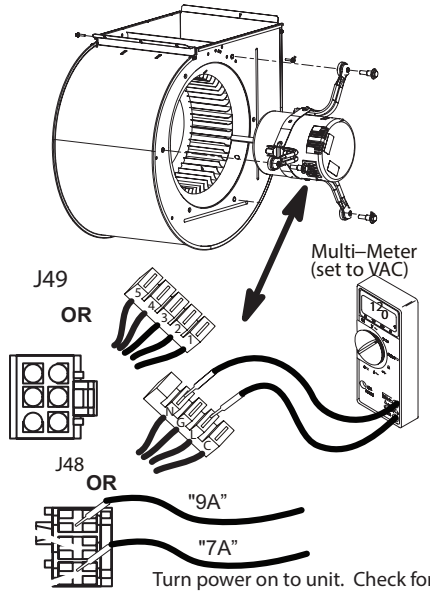

Test 1

Turn power on to unit. Check for 120 volts across terminals "L" and "N" or terminals "7A" and "9A" of connector J48. If voltage is present continue to test 2. If voltage is not present problem may be upstream of J48. Proceed to test3.

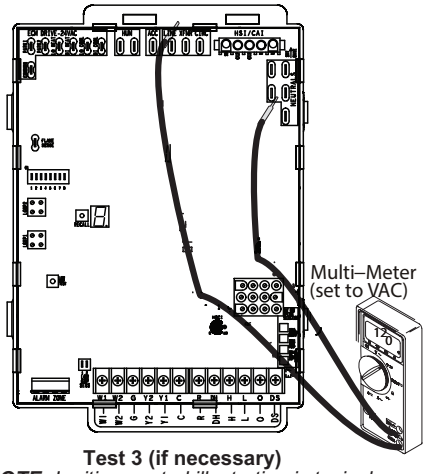

Test 3 (if necessary)

NOTE- *Ignition control illustration is typical*

Check for 120 volts across terminals "L1" and "Neutrals" on the integrated control. If voltage is present, problem is with the har ness. If voltage is not present problem may be may be with the integrated control.

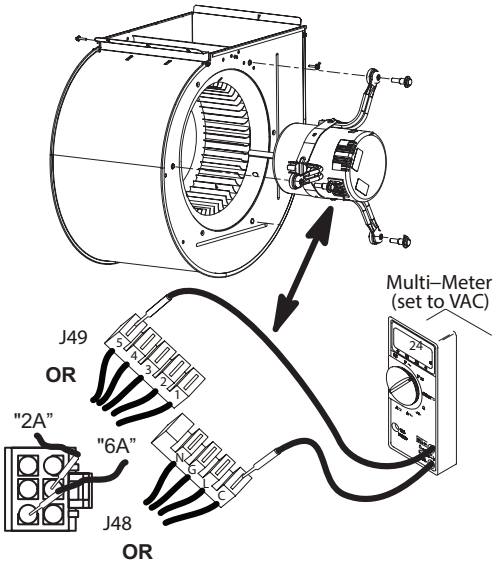

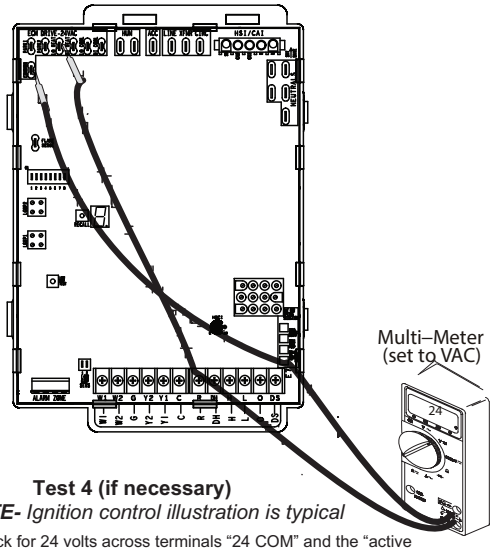

Test 4 (if necessary)

NOTE- *Ignition control illustration is typical*

Check for 24 volts across terminals "24 COM" and the "active speed tap" on the integrated control. If voltage is present, prob lem is with the harness. If voltage is not present problem may be may be with the integrated control

Test 2

Switch thermostat to CONTINUOUS FAN MODE.
For units using 4 and 5 position connector blocks, test for 24 volts terminal "C" of J48 and the tap used for continuous fan on J49 (1, 2, 3, 4 or 5). For units using 3 and 6 position connectors, test for 24 volts between pin "6A" and the pin used for continuous fan on connector J49 (1., 2, 3, 4 or 5).

FIGURE 16

Replacing the Motor Module

NOTE - *Not all motors have field replaceable control modules. Only motors that utilize a 4 pin power connector and 5 pin signal connector as shown below may have replaceable controls. Motors that use a 3 pin power connector and 6 pin signal connector do not have field replaceable control modules. In the event of failure, the entire motor must be replaced.*

1 - Disconnect electrical power to unit.

2 - Remove unit access panel.

3 - Unplug the **two** harnesses from the motor control module. See FIGURE 17.

4 - Remove the two hex head bolts securing the motor control module to the motor. See FIGURE 18.

5 - Slide the motor control module away from the motor to access and disconnect the internal three wire connector. It is not necessary to remove blower motor itself. Set both hex head bolts aside.

Unplug the Two Harness Connection

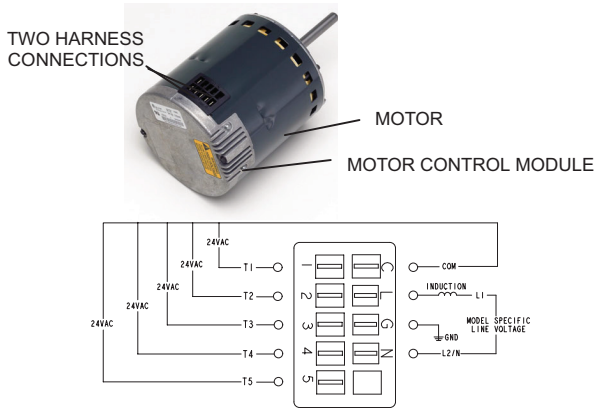

FIGURE 17

Remove the Hex Head Bolts

FIGURE 18

Testing the Motor (FIGURE 19)

If any motor fails the below tests, do not install the new control module. The motor is defective and it also must be replaced. The new control can fail if placed on a defective motor.

1 - Using an ohmmeter check the resistance from any one of the motor connector pins to the aluminum end plate of the motor. This resistance should be greater than 100k ohms.

2 - Check the resistances between each of the three motor connector pins. These should all read approximately the same resistance within an ohm.

3 - Check to see if the blower wheel spins freely.

Motor Test

FIGURE 19

TABLE 9

Scale	Measurement range in words	ohms
2 M	two megohm-two million ohms	0 - 2,000,000
200 K	two hundred kilo-ohm-two hundred thousand ohms	0 - 200,000
20 K	twenty kilo-ohm-twenty thousand ohms	0 - 20,000
2 K	two kilo-ohm two-thousand ohms	0 - 2,000
200	two hundred ohms	0 - 200

Motor Module Installation

All replacement motor control modules look similar; however, each module is designed for a specific motor size. It is very important to make sure that you are using the correct replacement motor control module. **USE OF THE WRONG MOTOR CONTROL MODULE MAY RESULT IN UNEXPECTED UNIT OPERATION.**

1 - Verify electrical power to unit is disconnected.

2 - Connect three-wire harness from motor to control module.

3 - Mount new motor control module to motor using two hex head bolts removed in FIGURE 18. Torque bolts to 22 inch pounds or 1/16th clock wise turn.

4 - Reconnect the two harnesses to the motor control module.

5 - The electrical connectors of the motor should be facing down to form a drip loop (FIGURE 20) This will directs moisture away from the motor and its electric connections on the motor.

Drip Loop

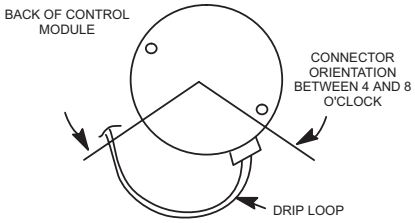

FIGURE 20

II-PLACEMENT AND INSTALLATION

Pipe & Fittings Specifications

All pipe, fittings, primer and solvent cement must conform with American National Standard Institute and the American Society for Testing and Materials (ANSI/ASTM) standards. The solvent shall be free flowing and contain no lumps, undissolved particles or any foreign matter that adversely affects the joint strength or chemical resistance of the cement. The cement shall show no gelation, stratification, or separation that cannot be removed by stirring. Refer to the TABLE 10 below for approved piping and fitting materials.

TABLE 10

PIPING AND FITTINGS SPECIFICATIONS

Schedule 40 PVC (Pipe)	D1785
Schedule 40 PVC (Cellular Core Pipe)*	F891
Schedule 40 PVC (Fittings)	D2466
Schedule 40 CPVC (Pipe)	F441
Schedule 40 CPVC (Fittings)	F438
SDR-21 PVC or SDR-26 PVC (Pipe)	D2241
SDR-21 CPVC or SDR-26 CPVC (Pipe)	F442
Schedule 40 ABS Cellular Core DWV (Pipe)*	F628
Schedule 40 ABS (Pipe)	D1527
Schedule 40 ABS (Fittings)	D2468
ABS-DWV (Drain Waste & Vent) (Pipe & Fittings)	D2661
PVC-DWV (Drain Waste & Vent) Pipe & Fittings)	D2665
PRIMER & SOLVENT CEMENT	**ASTM SPECIFICATION**
PVC & CPVC Primer	F656
PVC Solvent Cement	D2564
CPVC Solvent Cement	F493
ABS Solvent Cement	D2235
PVC/CPVC/ABS All Purpose Cement For Fittings & Pipe of the same material	D2564, D2235, F493
ABS to PVC or CPVC Transition Solvent Cement	D3138
CANADA PIPE & FITTING & SOLVENT CEMENT	**MARKING**
PVC & CPVC Pipe and Fittings	ULC-S636
PVC & CPVC Solvent Cement	
ABS to PVC or CPVC Transition Cement	
POLYPROPYLENE VENTING SYSTEM	
PolyPro® by Duravent	
InnoFlue® by Centrotherm	
UL 1738 CERTIFIED GAS VENTING SYSTEM	
IPEX System1738 Schedule 40 PVC Pipes and Fittings	UL 1738
IPEX System1738 PVC FGV Cement & Primer	
POLYPROPYLENE VENTING SYSTEM	
InnoFlue® by Centrotherm	

* Not approved as of 12-1-2022

⚠ IMPORTANT

Exhaust and intake connections are made of PVC. Use PVC primer and solvent cement when using PVC vent pipe. When using ABS vent pipe, use transitional solvent cement to make connections to the PVC fittings in the unit.

⚠ CAUTION

Solvent cements for plastic pipe are flammable liquids and should be kept away from all sources of ignition. Do not use excessive amounts of solvent cement when making joints. Good ventilation should be maintained to reduce fire hazard and to minimize breathing of solvent vapors. Avoid contact of cement with skin and eyes.

Use PVC primer and solvent cement or ABS solvent cement meeting ASTM specifications, refer to TABLE 10. As an alternate, use all purpose cement, to bond ABS, PVC, or CPVC pipe when using fittings and pipe made of the same materials. Use transition solvent cement when bonding ABS to either

PVC or CPVC.

Low temperature solvent cement is recommended during cooler weather. Metal or plastic strapping may be used for vent pipe hangers. Uniformly apply a liberal coat of PVC primer for PVC or use a clean dry cloth for ABS to clean inside socket surface of fitting and male end of pipe to depth of fitting socket.

Canadian Applications Only - *Pipe, fittings, primer and solvent cement used to vent (exhaust) this appliance must be certified to ULC S636 and supplied by a single manufacturer as part of an approved vent (exhaust) system. In addition, the first three feet of vent pipe from the furnace flue collar must be accessible for inspection.*

TABLE 11

OUTDOOR TERMINATION USAGE*								
Input Size	Vent Pipe Dia. in.	STANDARD				CONCENTRIC		
		Flush Mount Kit	Wall Kit		Field Fabricated	1-1.2 inch	2 inch	3 inch
			2 inch	3 inch				
		51W11 (US) 51W12 (CA)	22G44 (US) [4]30G28 (CA)	44J40 (US) [4]81J20 (CA)		71M80 (US) [4]44W92 (CA)	69M29 (US) [4]44W92 (CA)	60L46 (US) [4]44W93 (CA)
030, 045	[6]1-1.2	[3]YES	YES	[1]YES	[5]YES	[2]YES		
	2	[3]YES	YES	[1]YES	[5]YES	[2]YES		
	2-1/2	[3]YES	YES	[1]YES	[5]YES	[2]YES		
	3	[3]YES	YES	[1]YES	[5]YES	[2]YES		
070	[6]1-1/2	[3]YES	YES	[1]YES	[5]YES	[2]YES		
	2	[3]YES	YES	[1]YES	[5]YES	[2]YES		
	2-1/2	[3]YES	YES	[1]YES	[5]YES	[2]YES		
	3	[3]YES	YES	[1]YES	[5]YES	[2]YES		
090	2	[3]YES		YES	[5]YES		YES	YES
	2-1/2	[3]YES		YES	[5]YES		YES	YES
	3	[3]YES		YES	[5]YES		YES	YES
110	2	YES		YES	[5]YES		YES	YES
	2-1/2	YES		YES	[5]YES		YES	YES
	3	YES		YES	[5]YES		YES	YES

NOTE - Standard Terminations do not include any vent pipe or elbows external to the structure. Any vent pipe or elbows external to the structure must be included in total vent length calculations. See vent length tables.

* Kits must be properly installed according to kit instructions.

1Requires field-provided outdoor 1-1/2" exhaust accelerator.

2Concentric kits 71M80 and 44W92 include 1-1/2" outdoor accelerator, when uses with 030, 045 and 070 input models. When using 1-1/2 inch vent pipe, transistion to 2" pipe before installing concentric kit.

3 Flush mount kits 51W11 and 51W12 includes 1-1/2 in. outdoor exhaust accelerator, required when used with 030, 045, 070 and 090 input models. When using 1-1/2" vent pipe, transition to 2" pipe before installing flushmount kit.

4 Termination kits 30G28, 44W92, 4493 and 81J20 are certified to ULC S636 for use in Canada only.

5 See table 8 for vent accelerator requirements.

6 Requires field provided 2" to 1-1/2" reducer.

Joint Cementing Procedure

All cementing of joints should be done according to the specifications outlined in ASTM D 2855.

⚠ DANGER

DANGER OF EXPLOSION!

Fumes from PVC glue may ignite during system check. Allow fumes to dissipate for at least 5 minutes before placing unit into operation..

1 - Measure and cut vent pipe to desired length.

2 - Debur and chamfer end of pipe, removing any ridges or rough edges. If end is not chamfered, edge of pipe may remove cement from fitting socket and result in a leaking joint.

NOTE - *Check the inside of vent pipe thoroughly for any obstruction that may alter furnace operation.*

3 - Clean and dry surfaces to be joined.

4 - Test fit joint and mark depth of fitting on outside of pipe.

5 - Uniformly apply a liberal coat of PVC primer for PVC or use a clean dry cloth for ABS to clean inside socket surface of fitting and male end of pipe to depth of fitting socket.

NOTE - *Time is critical at this stage. Do not allow primer to dry before applying cement.*

6 - Promptly apply solvent cement to end of pipe and inside socket surface of fitting. Cement should be applied lightly but uniformly to inside of socket. Take care to keep excess cement out of socket. Apply second coat to end of pipe.

7 - Immediately after applying last coat of cement to pipe, and while both inside socket surface and end of pipe are wet with cement, forcefully insert end of pipe into socket until it bottoms out. Turn PVC pipe 1/4 turn during assembly (but not after pipe is fully inserted) to distribute cement evenly. DO NOT turn ABS or cellular core pipe

NOTE - *Assembly should be completed within 20 seconds after last application of cement. Hammer blows should not be used when inserting pipe.*

8 - After assembly, wipe excess cement from pipe at end of fitting socket. A properly made joint will show a bead around its entire perimeter. Any gaps may indicate an improper assembly due to insufficient solvent.

9 - Handle joints carefully until completely set.

Venting Practices

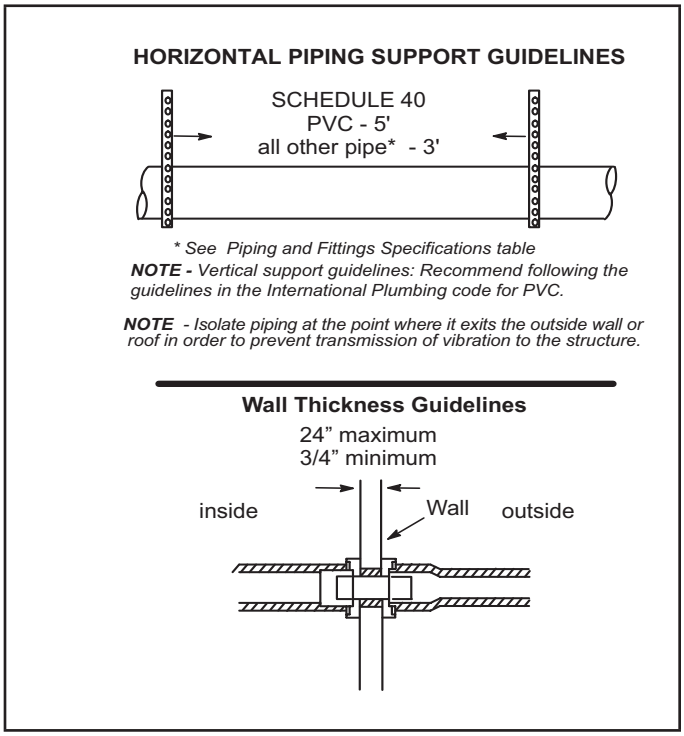

FIGURE 21

1 - In areas where piping penetrates joists or interior walls, hole must be large enough to allow clearance on all sides of pipe through center of hole using a hanger.

2 - When furnace is installed in a residence where unit is shut down for an extended period of time, such as a vacation home, make provisions for draining condensate collection trap and lines.

Exhaust Piping (FIGURE 23, FIGURE 25 & FIGURE 26)

Route piping to outside of structure. Continue with installation following instructions given in piping termination section.

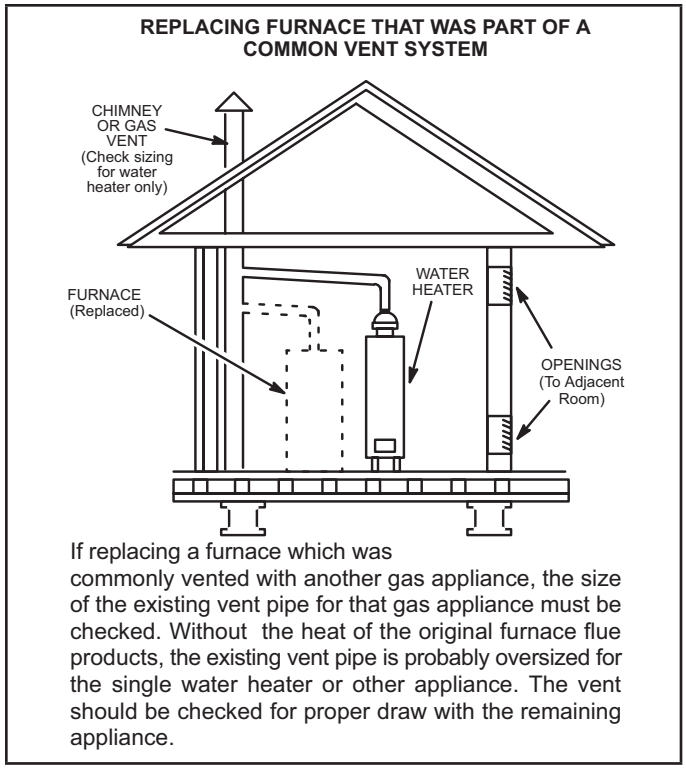

FIGURE 22

⚠ CAUTION

Do not discharge exhaust into an existing stack or stack that also serves another gas appliance. If vertical discharge through an existing unused stack is required, insert PVC pipe inside the stack until the end is even with the top or outlet end of the metal stack.

⚠ CAUTION

The exhaust vent pipe operates under positive pressure and must be completely sealed to prevent leakage of combustion products into the living space.

Vent Piping Guidelines

NOTE - *Lennox has approved the use of DuraVent® and Centrotherm manufactured vent pipe and terminations as an option to PVC. When using the PolyPro® by DuraVent or InnoFlue® by Centrotherm venting system the vent pipe requirements stated in the unit installation instruction – minimum & maximum vent lengths, termination clearances, etc. – apply and must be followed. Follow the instructions provided with PoyPro by DuraVent and InnoFlue by Centrotherm venting system for assembly or if requirements are more restrictive. The PolyPro by Duravent and InnoFlue by Centrotherm venting system must also follow the uninsulated and unconditioned space criteria listed in TABLE 15.*

The ML193UHE can be installed as either a Non-Direct Vent or a Direct Vent gas central furnace.

NOTE - *In Non-Direct Vent installations, combustion air is taken from indoors and flue gases are discharged outdoors. In Direct Vent installations, combustion air is taken from outdoors and flue gases are discharged outdoors.*

Intake and exhaust pipe sizing -- Size pipe according to TABLE 12 (minimum pipe lengths) and TABLE 13 (maximum pipe lengths. Count all elbows inside and outside the home. TABLE 14 lists maximum pipe lengths for furnaces installed in a closet or basement using ventilated attic or crawl space for intake air.

Regardless of the diameter of pipe used, the standard roof and wall terminations described in section Exhaust Piping Terminations should be used. Exhaust vent termination pipe is sized to optimize the velocity of the exhaust gas as it exits the termination. Refer to TABLE 16.

In some applications which permit the use of several different sizes of vent pipe, a combination vent pipe may be used. Contact Lennox' Application Department for assistance in sizing vent pipe in these applications.

NOTE - *The exhaust collar on all models is sized to accommodate 2" Schedule 40 vent pipe. In horizontal applications, any transition to exhaust pipe larger than 2" must be made in vertical runs of the pipe. Therefore a 2" elbow must be added before the pipe is transitioned to any size larger than 2". This elbow must be added to the elbow count used to determine acceptable vent lengths. Contact the Application Department for more information concerning sizing of vent systems which include multiple pipe sizes.*

Horizontal Installation Offset Requirements

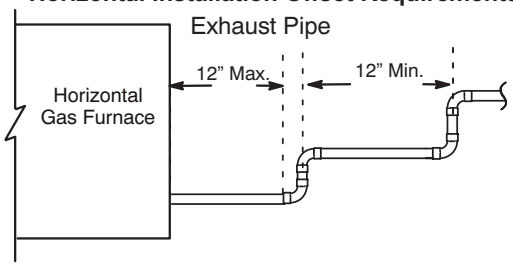

NOTE - *All horizontal runs of exhaust pipe must slope back toward unit. A minimum of 1/4" (6mm) drop for each 12" (305mm) of horizontal run is mandatory for drainage.*
NOTE *- Exhaust pipe MUST be glued to furnace exhaust fitting, unless the optional glueless vent adapter kit 17H92 is used..*
NOTE *- Exhaust piping should be checked carefully to make sure there are no sags or low spots.*

FIGURE 23

TABLE 12

MINIMUM VENT PIPE LENGTHS

ML193UHE Model	MIN. VENT LENGTH*
030, 045, -070, -090, 110	15 ft. or 5 ft. plus 2 elbows or 10 ft. plus 1 elbow

*Any approved termination may be added to the minimum length listed. Two 45 degree elbows are the equivalent of one 90 degree elbow.

Use the following steps to correctly size vent pipe diameter.

Piping Size Process

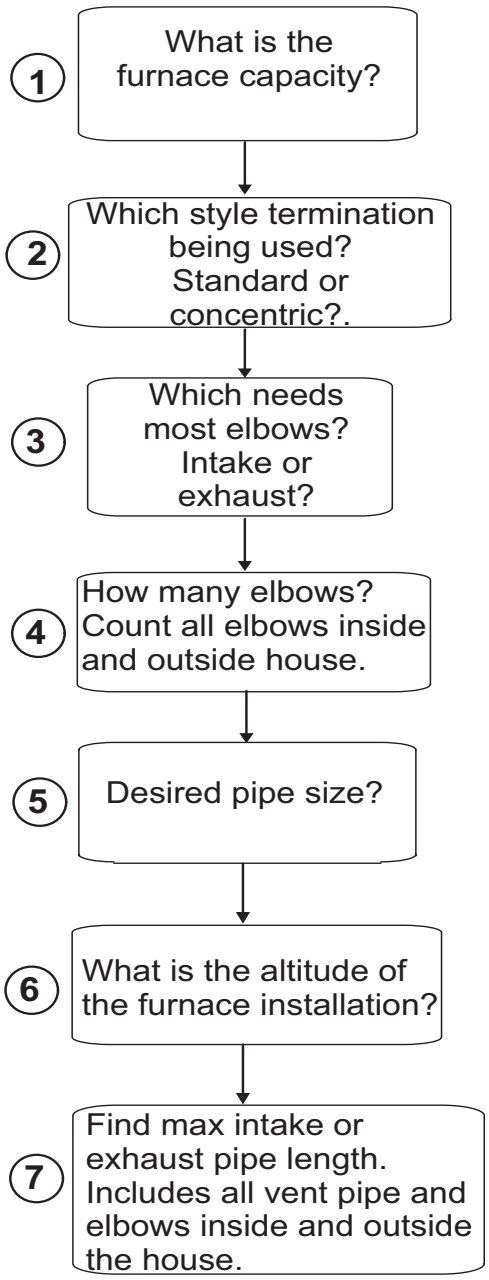

FIGURE 24

⚠ IMPORTANT

Do not use screens or perforated metal in exhaust or intake terminations. Doing so will cause freeze-ups and may block the terminations.

TABLE 13

Maximum Allowable Intake or Exhaust Vent Length in Feet

NOTE - Size intake and exhaust pipe length separately. Values in table are for Intake OR Exhaust, not combined total. Both Intake and Exhaust must be same pipe size.

NOTE - Additional vent pipe and elbows used to terminate the vent pipe outside the structure must be included in the total vent length calculation.

Standard Termination at Elevation 0 - 10,000																
Number Of 90° Elbows Used	1-1/2" Pipe				2" Pipe				2-1/2" Pipe				3" Pipe			
	Model				Model				Model				Model			
	030/045	070	090	110	030/045	070	090	110	030/045	070	090	110	030/045	070	090	110
1	25	20	n/a	n/a	81	66	44	24	115	100	68	43	137	137	118	118
2	20	15			76	61	39	19	110	95	63	38	132	132	113	113
3	15	10			71	56	34	14	105	90	58	33	127	127	108	108
4	10				66	51	29	n/a	100	85	53	28	122	122	103	103
5	n/a				61	46	24		95	80	48	23	117	117	98	98
6					56	41	19		90	75	43	18	112	112	93	93
7					51	36	14		85	70	38	13	107	107	88	88
8					46	31	n/a		80	65	33	n/a	102	102	83	83
9					41	26			75	60	28		97	97	78	78
10					36	21			70	55	23		92	92	73	73
Concentric Termination Elevation 0 - 10,000																
Number Of 90° Elbows Usedl	1-1/2" Pipe				2" Pipe				2-1/2" Pipe				3" Pipe			
	Model				Model				Model				Model			
	030/045	070	090	110	030/045	070	090	110	030/045	070	090	110	030/045	070	090	110
1	20	15	n/a	n/a	73	58	42	22	105	90	64	39	121	121	114	114
2	15	10			68	53	37	17	100	85	59	34	116	116	109	109
3	10	n/a			63	48	32	12	95	80	54	29	111	111	104	104
4	n/a				58	43	27	n/a	90	75	49	24	106	106	99	99
5					53	38	22		85	70	44	19	101	101	94	94
6					48	33	17		80	65	39	14	96	96	89	89
7					43	28	12		75	60	34	n/a	91	91	84	84
8					38	23	n/a		70	55	29		86	86	79	79
9					33	18			65	50	24		81	81	74	74
10					28	13			60	45	19		76	76	69	69

TABLE 14

VENT LENGTHS (EXHAUST) - VENTILATED ATTIC OR CRAWLSPACE INTAKE AIR - FEET

STANDARD TERMINATION AT ELEVATION 0 - 10,000 ft.

	Pipe Size	1-1/2 in.				2 in.				2-1/2 in.				3 in.			
	Input	030/045	070	090	110	030/045	070	090	110	030/045	070	090	110	030/045	070	090	110
No. of 90 ELL	1	20	15	N/A	N/A	71	56	34	14	100	100	78	43	118	117	98	98
	2	15	10	N/A	N/A	66	51	29	9	95	95	73	38	113	112	93	93
	3	10	N/A	N/A	N/A	61	46	24	4	90	90	68	33	108	107	88	88
	4	N/A	N/A	N/A	N/A	56	41	19	N/A	85	85	63	28	103	102	83	83
	5	N/A	N/A	N/A	N/A	51	36	14	N/A	80	80	58	23	98	97	78	78
	6	N/A	N/A	N/A	N/A	46	31	9	N/A	85	75	63	18	93	92	73	73
	7	N/A	N/A	N/A	N/A	41	26	4	N/A	70	70	48	13	88	87	68	68
	8	N/A	N/A	N/A	N/A	36	21	N/A	N/A	65	65	43	8	83	82	63	63
	9	N/A	N/A	N/A	N/A	31	16	N/A	N/A	60	60	38	3	78	77	58	58
	10	N/A	N/A	N/A	N/A	26	11	N/A	N/A	55	55	33	N/A	73	72	53	53

NOTES - Additional vent pipe and elbows used to terminate vent pipe outside the structure must be included in the total vent length calculation.

TYPICAL *EXHAUST AND INTAKE* PIPE CONNECTIONS IN UPFLOW DIRECT OR NON-DIRECT VENT APPLICATIONS

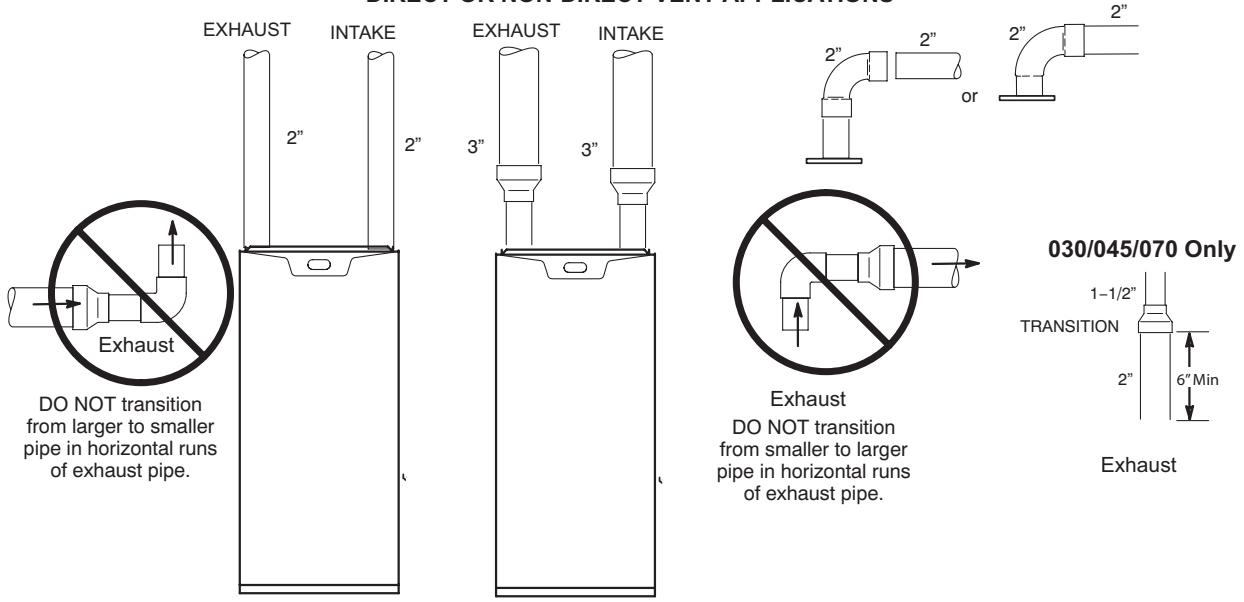

* When transitioning up in pipe size, use the shortest length of 2” PVC pipe possible.
NOTE – Exhaust pipe and intake pipe must be the same diameter.

FIGURE 25

TYPICAL *EXHAUST AND INTAKE* PIPE CONNECTIONS IN HORIZONTAL DIRECT OR NON-DIRECT VENT APPLICATIONS (RIGHT HAND DISCHARGE SHOWN)

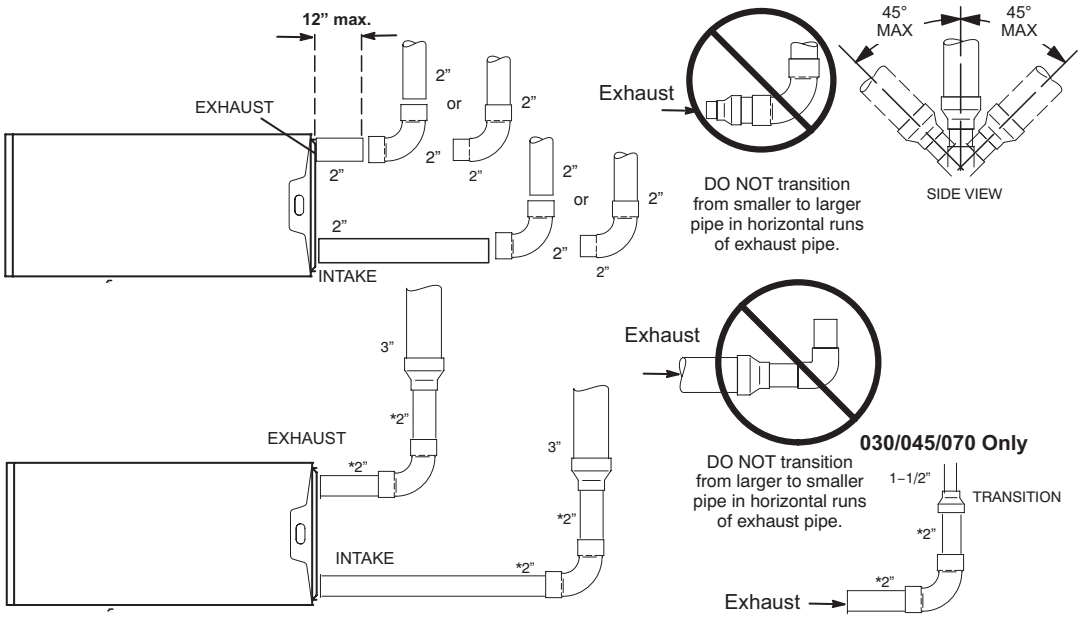

* When transitioning up in pipe size, use the shortest length of 2” PVC pipe possible.
NOTE – Exhaust pipe and intake pipe must be the same diameter.

FIGURE 26

Intake Piping

The ML193UHE furnace may be installed in either direct vent or non-direct vent applications. In non-direct vent applications, when intake air will be drawn into the furnace from the surrounding space, the indoor air quality must be considered and guidelines listed in Combustion, Dilution and Ventilation Air section must be followed.

Follow the next two steps when installing the unit in **Direct Vent applications**, where combustion air is taken from outdoors and flue gases are discharged outdoors. **The provided air intake screen must not be used in direct vent applications (outdoors)**.

1 - Use transition solvent cement or a sheet metal screw to secure the intake pipe to the inlet air connector.

2 - Route piping to outside of structure. Continue with installation following instructions given in general guide lines for piping terminations and intake and exhaust piping terminations for direct vent sections. Refer to TABLE 13 for pipe sizes.

TYPICAL AIR INTAKE PIPE CONNECTIONS
UPFLOW NON–DIRECT
VENT APPLICATIONS

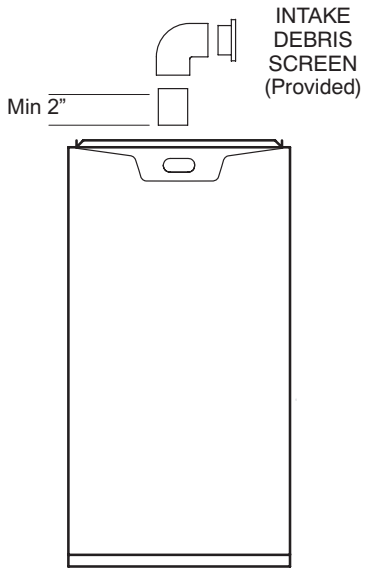

NOTE *- Debris screen and elbow may be rotated, so that screen may be positioned to face forward or to either side.*

FIGURE 27

TYPICAL AIR INTAKE PIPE CONNECTIONS
HORIZONTAL NON–DIRECT VENT APPLICATIONS
(Horizontal Right–Hand Air Discharge Application Shown)

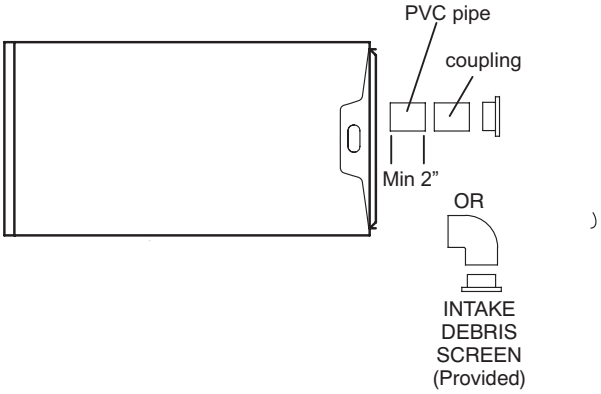

NOTE *- Debris screen may be positioned straight out (preferred) or with an elbow rotated to face down.*

FIGURE 28

Follow the next two steps when installing the unit in **Non-Direct Vent applications** where combustion air is taken from indoors and flue gases are discharged outdoors.

1 - Use field-provided materials and the factory-provided air intake screen to route the intake piping as shown in FIGURE 27 or FIGURE 28. Maintain a minimum clearance of 3” (76mm) around the air intake opening. The air intake opening (with the protective screen) should always be directed forward or to either side in the upflow position, and either straight out or downward in the horizontal position.

The air intake piping must not terminate too close to the flooring or a platform. Ensure that the intake air inlet will not be obstructed by loose insulation or other items that may clog the debris screen.

2 - If intake air is drawn from a ventilated attic (FIGURE 29) or ventilated crawlspace (FIGURE 30) the exhaust vent length must not exceed those listed in TABLE 15. If 3” diameter pipe is used, reduce to 2” diameter pipe at the termination point to accommodate the debris screen.

3 - Use a sheet metal screw to secure the intake pipe to the connector, if desired.

⚠ CAUTION

If this unit is being installed in an application with combustion air coming in from a space serviced by an exhaust fan, power exhaust fan, or other device which may create a negative pressure in the space, take care when sizing the inlet air opening. The inlet air opening must be sized to accommodate the maximum volume of exhausted air as well as the maximum volume of combustion air required for all gas appliances serviced by this space.

EQUIPMENT IN CONFINED SPACE
(Inlet Air from Ventilated Attic and Outlet Air to Outside)

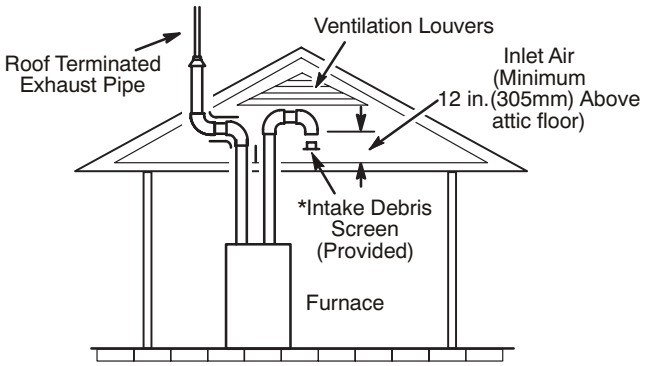

***NOTE**-The inlet and outlet air openings shall each have a free area of at least one square inch per 4,000 Btu (645mm^2 per 1.17kW) per hour of the total input rating of all equipment in the enclosure.*

FIGURE 29

EQUIPMENT IN CONFINED SPACE
(Inlet Air from Ventilated Crawlspace and Outlet Air to Outside)

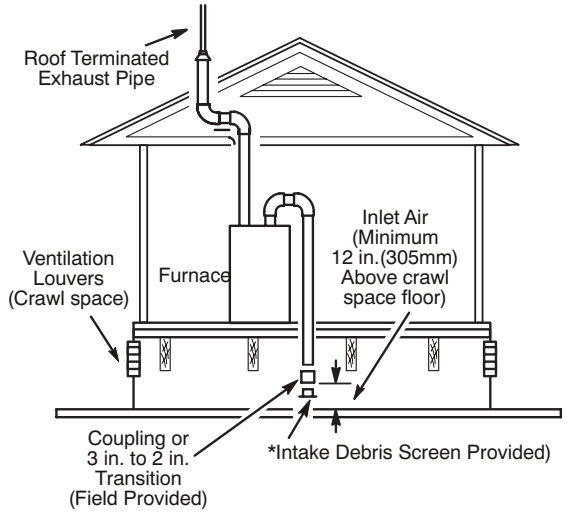

***NOTE**-The inlet and outlet air openings shall each have a free area of at least one square inch per 4,000 Btu (645mm^2 per 1.17kW) per hour of the total input rating of all equipment in the enclosure.*

FIGURE 30

General Guidelines for Vent Terminations

In Non-Direct Vent applications, combustion air is taken from indoors and the flue gases are discharged to the outdoors. The ML193UHE is then classified as a non-direct vent, Category IV gas furnace.

In Direct Vent applications, combustion air is taken fromoutdoors and the flue gases are discharged to the outdoors. The ML193UHE is then classified as a direct vent, Category IV gas furnace.

In both Non-Direct Vent and Direct Vent applications, the vent termination is limited by local building codes. In the absence of local codes, refer to the current National Fuel as Code ANSI Z223-1/NFPA 54 in U.S.A., and current CSA-B149 Natural Gas and Propane Installation Codes in Canada for details.

Position termination according to location given in FIGURE 32 or FIGURE 33. In addition, position termination so it is free from any obstructions and 12” above the average snow accumulation.

At vent termination, care must be taken to maintain protective coatings over building materials (prolonged exposure to exhaust condensate can destroy protective coatings). It is recommended that the exhaust outlet not be located within 6 feet (1.8m) of an outdoor AC unit because the condensate can damage the painted coating.

***NOTE -** See TABLE 15 for maximum allowed exhaust pipe length without insulation in unconditioned space during winter design temperatures below 32°F (0°C). If required exhaust pipe should be insulated with 1/2” (13mm) Armaflex or equivalent. In extreme cold climate areas, 3/4” (19mm) Armaflex or equivalent may be necessary. Insulatio ust be protected from deterioration. Armaflex with UV protection is permissable. Basements or other enclosed areas that are not exposed to the outdoor ambient temperature and are above 32 degrees F (0°C) are to be considered conditioned spaces.*

⚠ IMPORTANT

Do not use screens or perforated metal in exhaust terminations. Doing so will cause freeze-ups and may block the terminations.

⚠ IMPORTANT

For Canadian Installations Only:

In accordance to CSA International B149 installation codes, the minimum allowed distance between the combustion air intake inlet and the exhaust outlet of other appliances shall not be less than 12 inches (305mm).

TABLE 15

Maximum Allowable Exhaust Vent Pipe Length (in ft.) Without Insulation In Unconditioned Space For Winter Design Temperatures Single - Stage High Efficiency Furnace

Winter Design Temperatures1 °F (°C)	Vent Pipe Diameter	Unit Input Size									
		030		045		070		090		110	
		PVC	[2]PP	PVC	[2]PP	PVC	[2]PP	PVC	[2]PP	PVC	[2]PP
32 to 21 (0 to -6)	1-1/2”	N/A	N/A	25	N/A	20	N/A	N/A	N/A	N/A	N/A
	2 in			18	16	31	28	50	48	30	30
	2-1/2 in			13	N/A	24	N/A	42	N/A	56	N/A
	3 in			9	9	18	18	35	35	47	47
20 to 1 (-7 to -17)	1-1/2”			15	N/A	20	N/A	N/A	N/A	N/A	N/A
	2 in			9	8	18	16	32	29	30	30
	2-1/2 in			5	N/A	13	N/A	24	N/A	34	N/A
	3 in			1	1	8	8	19	19	26	26
0 to -20 (-18 to -29)	1-1/2”			10	N/A	15	N/A	N/A	N/A	N/A	N/A
	2 in			5	3	12	10	22	19	30	27
	2-1/2 in			1	N/A	7	N/A	15	N/A	22	N/A
	3 in			N/A	N/A	2	2	10	10	16	16

[1]Refer to 99% Minimum Design Temperature table provided in the current edition of the ASHRAE Fundamentals Handbook.

[2] Poly-Propylene vent pipe (PP) by Duravent and Centrotherm.

NOTE - Concentric terminations are the equivalent of 5’ and should be considered when measuring pipe length.

NOTE - Maximum unisulated vent lengths listed may include the termination(vent pipe exterior to the structure) and cannot exceed 5 linear feet or the maximum allowable intake or exhaust vent length listed in TABLE 13 or TABLE 14 which ever is less.

NOTE - If insulation is required in an unconditioned space, it must be located on the pipe closest to the furnace. See FIGURE 31.

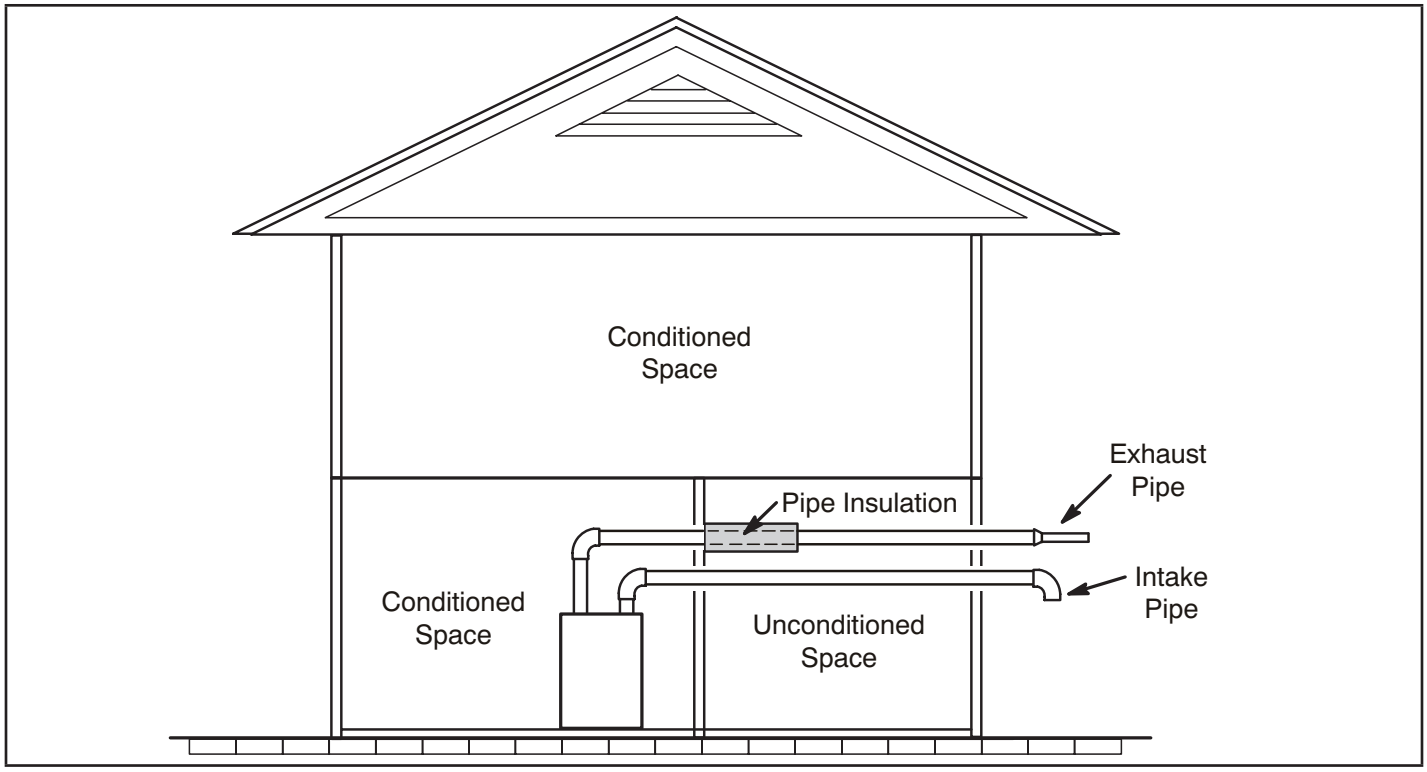

FIGURE 31

VENT TERMINATION CLEARANCES
FOR NON-DIRECT VENT INSTALLATIONS IN THE USA AND CANADA

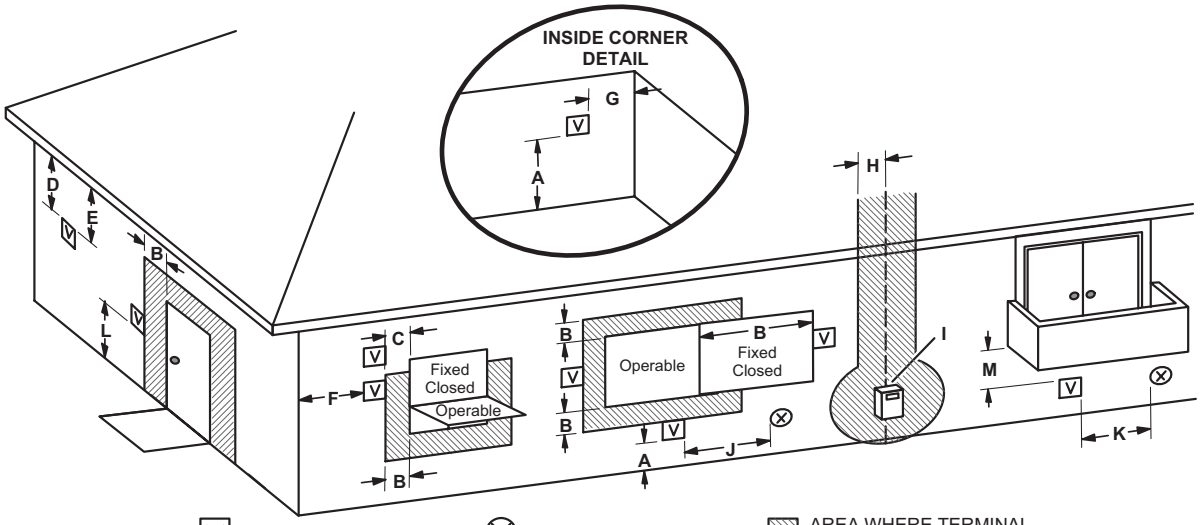

		US Installations[1]	Canadian Installations[2]
A =	Clearance above grade, veranda, porch, deck or balcony	12 inches (305mm) or 12 in. (305mm) above average snow accumulation.	12 inches (305mm) or 12 in. (305mm) above average snow accumulation.
B =	Clearance to window or door that may be opened	4 feet (1.2 m) below or to side of opening; 1 foot (30cm) above opening	6 inches (152mm) for appliances <10,000 Btuh (3kw), 12 inches (305mm) for appliances > 10,000 Btuh (3kw) and <100,000 Btuh (30kw), 36 inches (.9m) for appliances > 100,000 Btuh (30kw)
C =	Clearance to permanently closed window	* 12”	* 12”
D =	Vertical clearance to ventilated soffit located above the terminal within a horizontal distance of 2 feet (610 mm) from the center line of the terminal	* Equal to or greater than soffit depth.	* Equal to or greater than soffit depth.
E =	Clearance to unventilated soffit	* Equal to or greater than soffit depth.	* Equal to or greater than soffit depth.
F =	Clearance to outside corner	* No minimum to outside corner	* No minimum to outside corner
G =	Clearance to inside corner	*	*
H =	Clearance to each side of center line extended above meter / regulator assembly	* 3 feet (.9m) within a height 15 feet (4.5m) above the meter / regulator assembly	3 feet (.9m) within a height 15 feet (4.5m) above the meter / regulator assembly
I =	Clearance to service regulator vent outlet	* 3 feet (.9m)	3 feet (.9m)
J =	Clearance to non-mechanical air supply inlet to building or the combustion air inlet to any other appliance	4 feet (1.2 m) below or to side of opening; 1 foot (30 cm) above opening	6 inches (152mm) for appliances <10,000 Btuh (3kw), 12 inches (305mm) for appliances > 10,000 Btuh (3kw) and <100,000 Btuh (30kw), 36 inches (.9m) for appliances > 100,000 Btuh (30kw)
K =	Clearance to mechanical air supply inlet	3 feet (.9m) above if within 10 feet (3m) horizontally	6 feet (1.8m)
L =	Clearance above paved sidewalk or paved driveway located on public property	7 feet (2.1m)†	7 feet (2.1m)†
M =	Clearance under veranda, porch, deck or balcony	*12 inches (305mm)‡	12 inches (305mm)‡

[1] In accordance with the current ANSI Z223.1/NFPA 54 Natural Fuel Gas Code
[2] In accordance with the current CSA B149.1, Natural Gas and Propane Installation Code
† A vent shall not terminate directly above a sidewalk or paved driveway that is located between two single family dwellings and serves both dwellings.

‡ Permitted only if veranda, porch, deck or balcony is fully open on a minimum of two sides beneath the floor. Lennox recommends avoiding this location if possible.

*For clearances not specified in ANSI Z223.1/NFPA 54 or CSA B149.1, clearance will be in accordance with local installation codes and the requirements of the gas supplier and these installation instructions.”

NOTE - *This figure is intended to illustrate clearance requirement and does not serve as a substitute for locally adopted installation codes.*

FIGURE 32

VENT TERMINATION CLEARANCES FOR DIRECT VENT INSTALLATIONS IN THE US AND CANADA

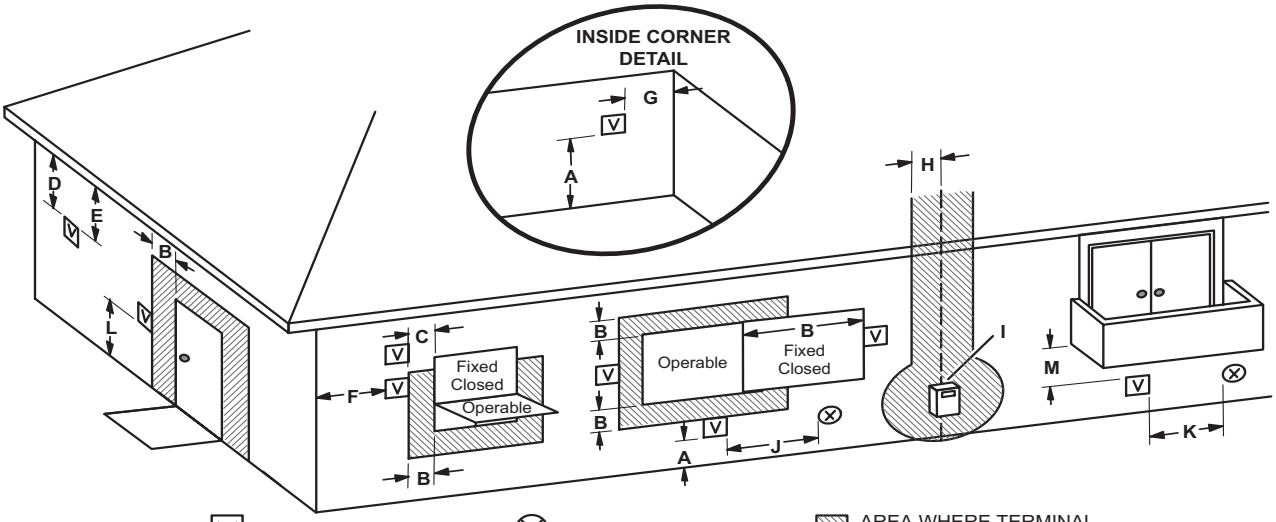

		US Installations[1]	Canadian Installations[2]
A =	Clearance above grade, veranda, porch, deck or balcony	12 inches (305mm) or 12 in. (305mm) above average snow accumulation.	12 inches (305mm) or 12 in. (305mm) above average snow accumulation.
B =	Clearance to window or door that may be opened	6 inches (152mm) for appliances <10,000 Btuh (3kw), 9 inches (228mm) for appliances > 10,000 Btuh (3kw) and <50,000 Btuh (15 kw), 12 inches (305mm) for appliances > 50,000 Btuh (15kw)	6 inches (152mm) for appliances <10,000 Btuh (3kw), 12 inches (305mm) for appliances > 10,000 Btuh (3kw) and <100,000 Btuh (30kw), 36 inches (.9m) for appliances > 100,000 Btuh (30kw)
C =	Clearance to permanently closed window	* 12”	* 12”
D =	Vertical clearance to ventilated soffit located above the terminal within a horizontal distance of 2 feet (610mm) from the center line of the terminal	* Equal to or greater than soffit depth	* Equal to or greater than soffit depth
E =	Clearance to unventilated soffit	* Equal to or greater than soffit depth	* Equal to or greater than soffit depth
F =	Clearance to outside corner	* No minimum to outside corner	* No minimum to outside corner
G =	Clearance to inside corner	*	*
H =	Clearance to each side of center line extended above meter / regulator assembly	3 feet (.9m) within a height 15 feet (4.5m) above the meter / regulator assembly	3 feet (.9m) within a height 15 feet (4.5m) above the meter / regulator assembly
I =	Clearance to service regulator vent outlet	* 3 feet (.9m)	3 feet (.9m)
J =	Clearance to non-mechanical air supply inlet to building or the combustion air inlet to any other appliance	6 inches (152mm) for appliances <10,000 Btuh (3kw), 9 inches (228mm) for appliances > 10,000 Btuh (3kw) and <50,000 Btuh (15 kw), 12 inches (305mm) for appliances > 50,000 Btuh (15kw)	6 inches (152mm) for appliances <10,000 Btuh (3kw), 12 inches (305mm) for appliances > 10,000 Btuh (3kw) and <100,000 Btuh (30kw), 36 inches (.9m) for appliances > 100,000 Btuh (30kw)
K =	Clearance to mechanical air supply inlet	3 feet (.9m) above if within 10 feet (3m) horizontally	6 feet (1.8m)
L =	Clearance above paved sidewalk or paved driveway located on public property	* 7 feet (2.1m)	7 feet (2.1m)†
M =	Clearance under veranda, porch, deck or balcony	*12 inches (305mm)‡	12 inches (305mm)‡

[1] In accordance with the current ANSI Z223.1/NFPA 54 Natural Fuel Gas Code

[2] In accordance with the current CSA B149.1, Natural Gas and Propane Installation Code

† A vent shall not terminate directly above a sidewalk or paved driveway that is located between two single family dwellings and serves both dwellings.

‡ Permitted only if veranda, porch, deck or balcony is fully open on a minimum of two sides beneath the floor. Lennox recommends avoiding this location if possible.

*For clearances not specified in ANSI Z223.1/NFPA 54 or CSA B149.1, clearance will be in accordance with local installation codes and the requirements of the gas supplier and these installation instructions.”

NOTE - *This figure is intended to illustrate clearance requirements and does not serve as a substitute for locally adopted installation codes.*

FIGURE 33

Details of Intake and Exhaust Piping Terminations for Direct Vent Installations

NOTE - In Direct Vent installations, combustion air is taken from outdoors and flue gases are discharged to outdoors.

NOTE - *Flue gas may be slightly acidic and may adversely affect some building materials. If any vent termination is used and the flue gasses may impinge on the building material, a corrosion-resistant shield (minimum 24 inches square) should be used to protect the wall surface. If the optional tee is used, the protective shield is recommended. The shield should be constructed using wood, plastic, sheet metal or other suitable material. All seams, joints, cracks, etc. in the affected area should be sealed using an appropriate sealant. See FIGURE 42.*

Intake and exhaust pipes may be routed either horizontally through an outside wall or vertically through the roof. In attic or closet installations, vertical termination through the roof is preferred. FIGURE 34 through FIGURE 42 shows typical terminations.

1 - Intake and exhaust terminations are not required to be in the same pressure zone. You may exit the intake on one side of the structure and the exhaust on another side (FIGURE 35). You may exit the exhaust out the roof and the intake out the side of the structure (FIGURE 36).

NOTE - *When venting in different pressure zones, maximum separation of intake and exhaust pipe DO NOT apply.*

2 - Intake and exhaust pipes should be placed as close together as possible at termination end (refer to illustrations). Maximum separation is 3” (76mm) on roof terminations and 6” (152mm) on side wall terminations.

NOTE - *When venting in different pressure zones, the maximum separation requirement of intake and exhaust pipe DOES NOT apply.*

3 - On roof terminations, the intake piping should terminate straight down using two 90° elbows (See FIGURE 34).

4 - Exhaust piping must terminate straight out or up as shown. A reducer may be required on the exhaust piping at the point where it exits the structure to improve the velocity of exhaust away from the intake piping. See TABLE 16.

5 - On field supplied terminations for side wall exit, exhaust piping may extend a maximum of 12 inches (305mm) for 2” PVC and 20 inches (508mm) for 3” (76mm) PVC beyond the outside wall. Intake piping should be as short as possible.

6 - On field supplied terminations, a minimum distance between the end of the exhaust pipe and the end of the intake pipe without a termination elbow is 8” and a minimum distance of 6” with a termination elbow.

NOTE - *Care must be taken to avoid recirculation of exhaust back into intake pipe.*

TABLE 16

Exhaust Pipe Termination Size Reduction

ML193UHE Model	Termination Pipe Size
*030, *045, *070	1-1/2” (38mm)
*090	2” (51mm)
110	
*Use the provided 1-1/2” accelerator if matched with the flushmount termination.	

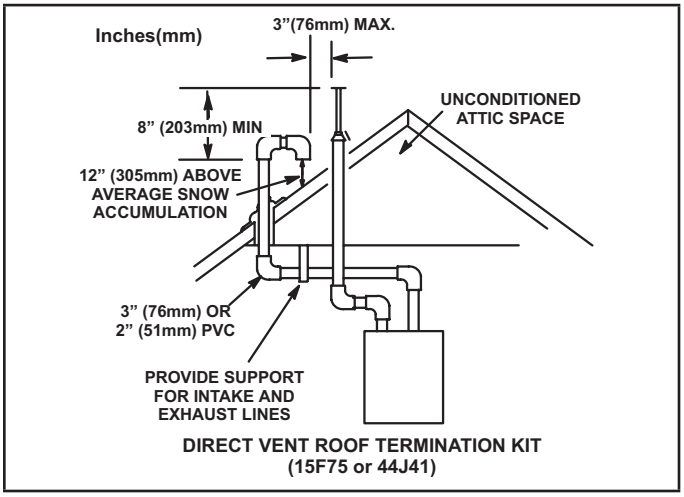

FIGURE 34

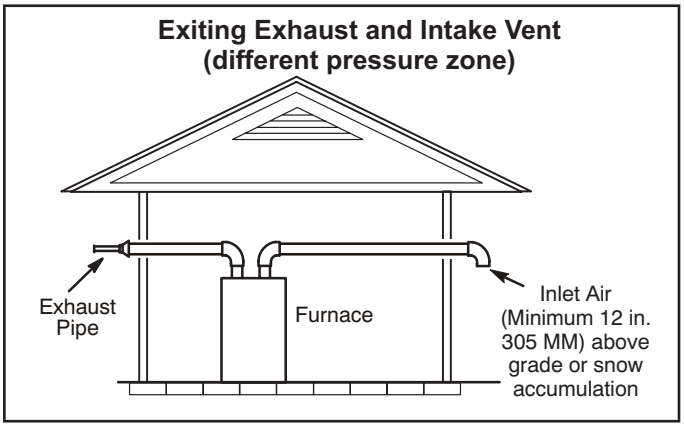

FIGURE 35

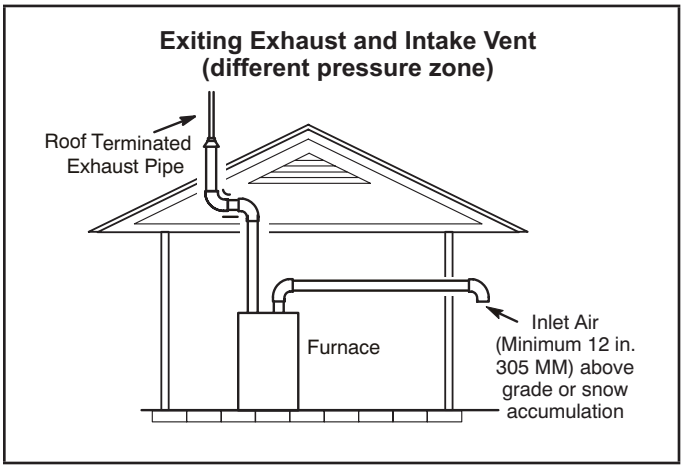

FIGURE 36

7 - If intake and exhaust piping must be run up a side wall to position above snow accumulation or other obstructions, piping must be supported. At least one bracket must be used within 6” from the top of the elbow and then every 24” (610mm) as shown in FIGURE 42, to prevent any movement in any direction. When exhaust and intake piping must be run up an outside wall, the exhaust piping must be terminated with pipe sized per table 16.The intake piping may be equipped with a 90° elbow turndown. Using turndown will add 5 feet (1.5m) to the equivalent length of the pipe.

8 - A multiple furnace installation may use a group of up to four terminations assembled together horizontally, as shown in FIGURE 39.

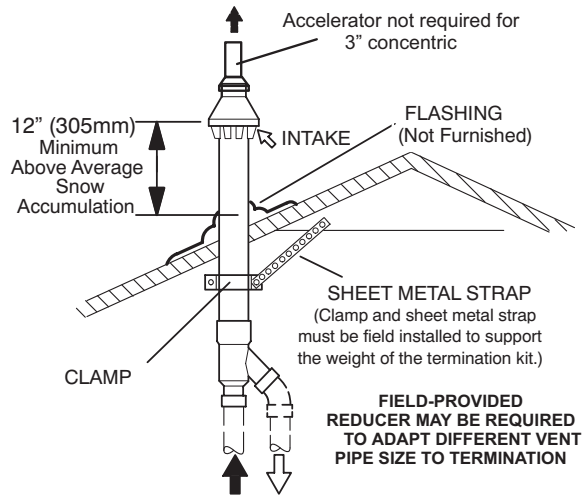

DIRECT VENT CONCENTRIC ROOFTOP TERMINATION
71M80, 69M29 or 60L46 (US)
44W92 or 44W93 (Canada)

FIGURE 37

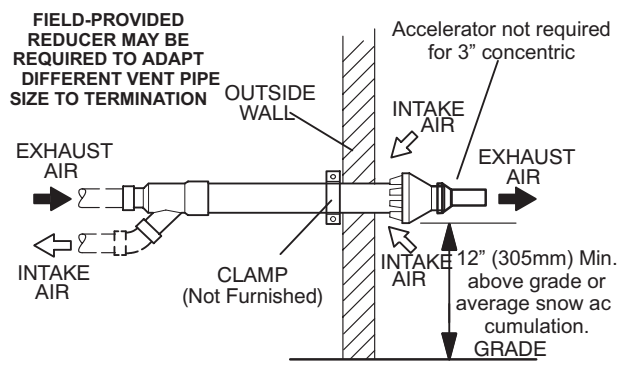

DIRECT VENT CONCENTRIC WALL TERMINATION
71M80, 69M29 or 60L46 (US)
44W92 or 44W93 (Canada)

FIGURE 38

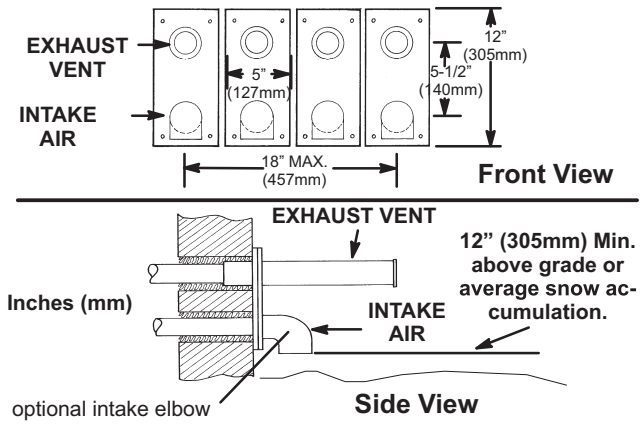

OPTIONAL VENT TERMINATION FOR MULTIPLE UNIT INSTALLATION OF DIRECT VENT WALL TERMINATION KIT (30G28 or 81J20)

FIGURE 39

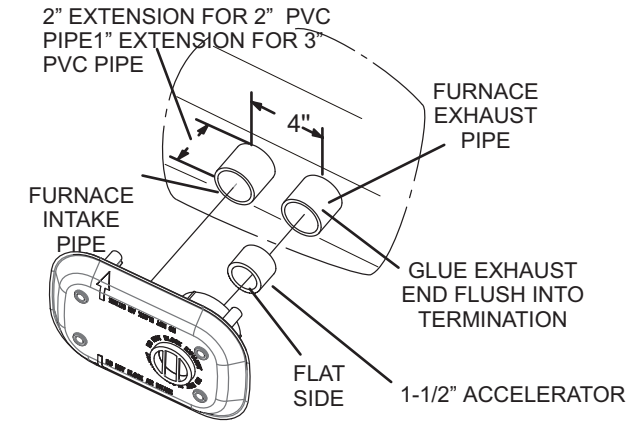

FLUSH-MOUNT SIDE WALL TERMINATION KIT
51W11 (US) or 51W12 (Canada)

FIGURE 40

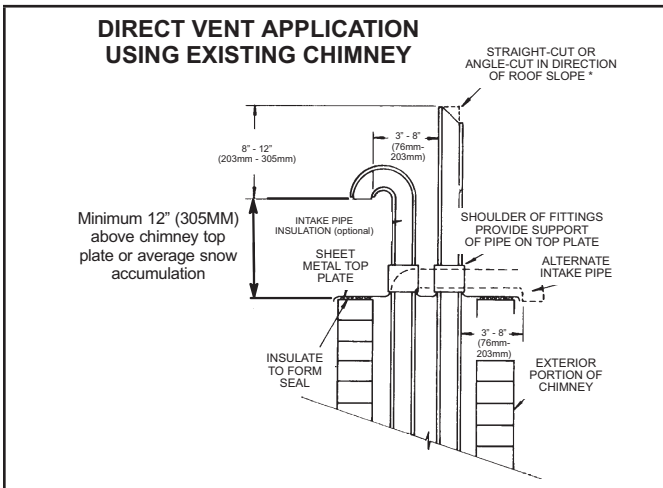

NOTE - Do not discharge exhaust gases directly into any chimney or vent stack. If vertical discharge through an existing unused chimney or stack is required, insert piping inside chimney until the pipe open end is above top of chimney and terminate as illustrated. In any exterior portion of chimney, the exhaust vent must be insulated.

FIGURE 41

FIELD FABRICATED WALL TERMINATION

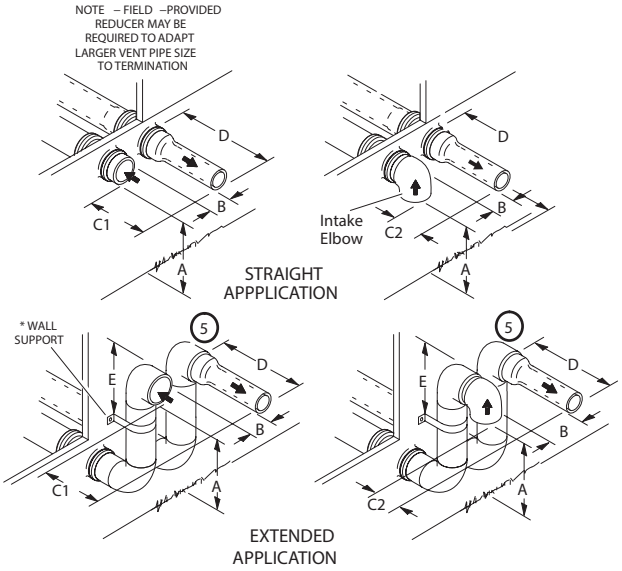

	2" (51mm) Vent Pipe	3" (76mm) Vent Pipe
A– Minimum clearance above grade or average snow accumulation	12" (305 mm)	12" (305 mm)
B– Maximum horizontal separation between intake and exhaust	6" (152 mm)	6" (152 mm)
C1 -Minimum from end of exhaust to inlet of intake	8" (203 mm)	8" (203 mm)
C2 -Minimum from end of exhaust to inlet of intake	6" (152 mm)	6" (152 mm)
D– Maximum exhaust pipe length	12" (305 mm)	20" (508 mm)
E– Maximum wall support distance from top of each pipe (intake/exhaust)	6" (152 mm)	6" (152 mm)

See maximum allowable venting tables for venting lengths with this arrangement.

* Use wall support every 24" (610 mm). Use two wall supports if extension is greater than 24" (610 mm) but less than 48" (1219 mm).

NOTE – One wall support must be within 6" (152 mm) from top of each pipe (intake and exhaust) to prevent movement in any direction.

ALTERNATE TERMINATIONS (TEE & FORTYFIVE DEGREE ELBOWS ONLY)

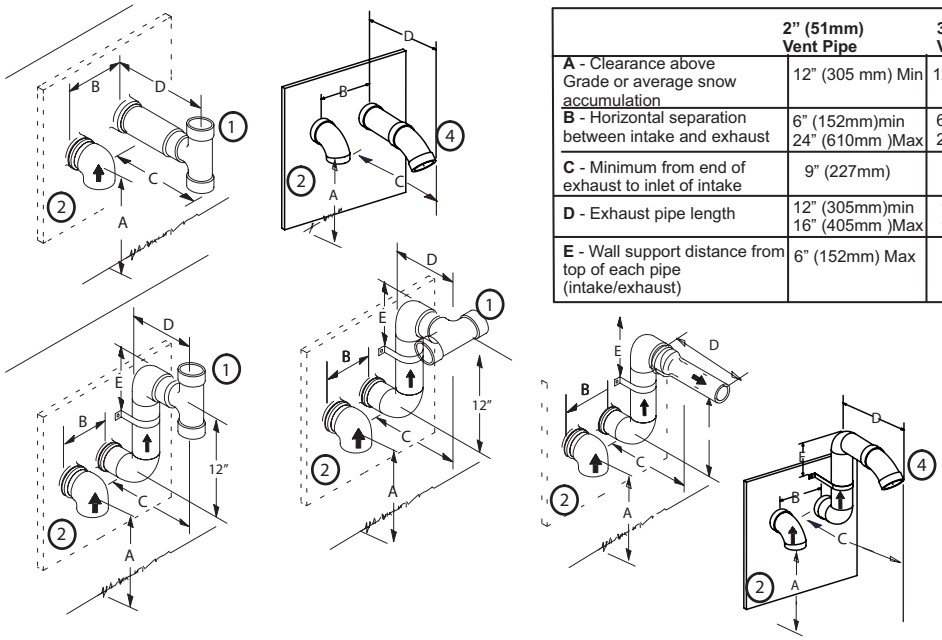

	2" (51mm) Vent Pipe	3" (76mm) Vent Pipe
A - Clearance above Grade or average snow accumulation	12" (305 mm) Min	12" (305 mm) Min
B - Horizontal separation between intake and exhaust	6" (152mm)min 24" (610mm)Max	6" (152mm)min 24" (610mm)Max
C - Minimum from end of exhaust to inlet of intake	9" (227mm)	9" (227mm)
D - Exhaust pipe length	12" (305mm)min 16" (405mm)Max	12" (305mm)min 16" (405mm)Max
E - Wall support distance from top of each pipe (intake/exhaust)	6" (152mm) Max	6" (152mm) Max

[1] The exhaust termination tee should be connected to the 2" or 3" PVC flue pipe as shown in the illustration. In horizontal tee applications there must be be a minimum of 3 ft away from covered patios or any living ares and cannot be within 3 ft of a window. Do not use an accelerator in applications that include an exhaust termination tee. The accelerator is not required.

[2] As required. Flue gas may be acidic and may adversely affect some building materials. If a side wall vent termination is used and flue gases will impinge on the building materials, a corrosion –resistant shield (24 inches square) should be used to protect the wall surface. If optional tee is used, the protective shield is recommended. The shield should be constructed using wood, sheet metal or other suitable material. All seams, joints, cracks, etc. in affected area, should be sealed using an appropriate sealant.

[3] Exhaust pipe 45 ° elbow can be rotated to the side away from the combustion air inlet to direct exhaust away from adjacent property. The exhaust must never be directed toward the combustion air inlet.

[4] Exhaust pipe can be rotated from the 12 o'clock position down to the 4 o' clock position

[5] Exhaust pipe in double snorkel applications can use a 45 as an option to the accelerator tip.

FIGURE 42

Details of Exhaust Piping Terminations for Non-Direct Vent Applications

Exhaust pipes may be routed either horizontally through an outside wall or vertically through the roof. In attic or closet installations, vertical termination through the roof is preferred.

FIGURE 43 and FIGURE 44 shows typical terminations.

1 - Exhaust piping must terminate straight out or up as shown. The termination pipe must be sized as listed in table 16.The specified pipe size ensures proper velocity required to move the exhaust gases away from the building.

2 - On field supplied terminations for side wall exit, exhaust piping may extend a maximum of 12 inches (305mm) for 2” PVC and 20 inches (508mm)

3 - If exhaust piping must be run up a side wall to position above snow accumulation or other obstructions, piping must be supported every 24 inches (610mm). When exhaust piping must be run up an outside wall, any reduction in exhaust pipe size must be done after the final elbow.

4 - Distance between exhaust pipe terminations on multiple furnaces must meet local codes.

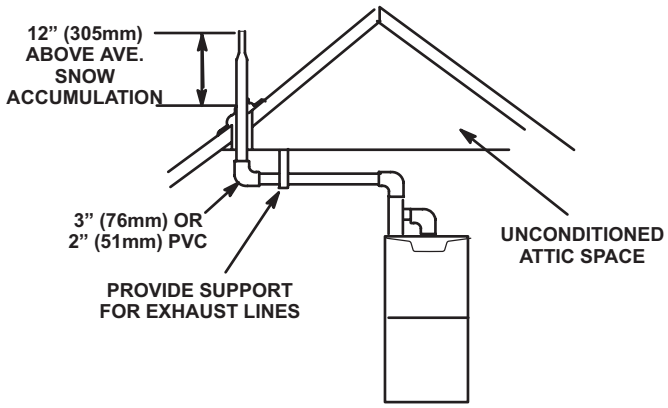

NON-DIRECT VENT ROOF TERMINATION KIT (15F75 or 44J41)

FIGURE 43

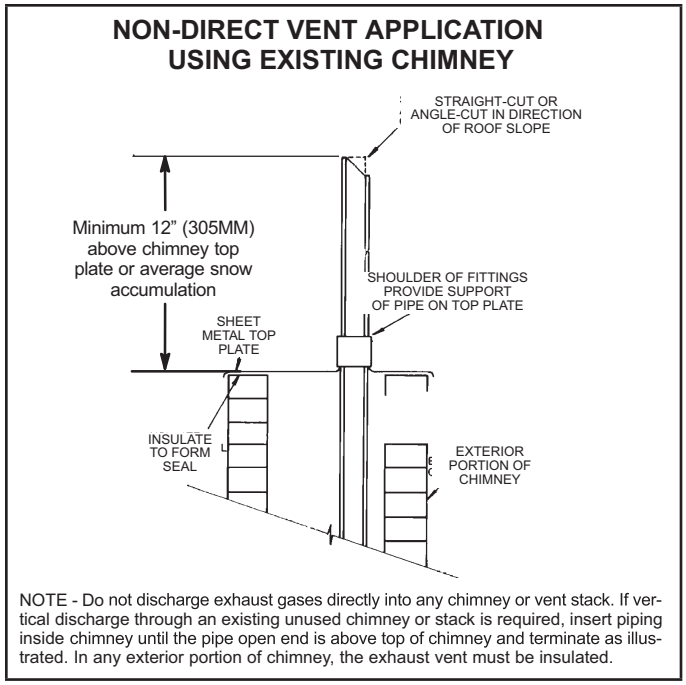

FIGURE 44

Crawl Space and Extended Horizontal Venting

Lennox provides kit 51W18 (USA) kit 15Z70 (Canada) to install 2” or 3” PVC exhaust piping through the floor joists and into the crawl space. See figure below.

This kit can also be used as a supplemental drain for installations with condensate run back in the vent pipe (ie. long horizontal runs, unconditioned spaces, etc.).

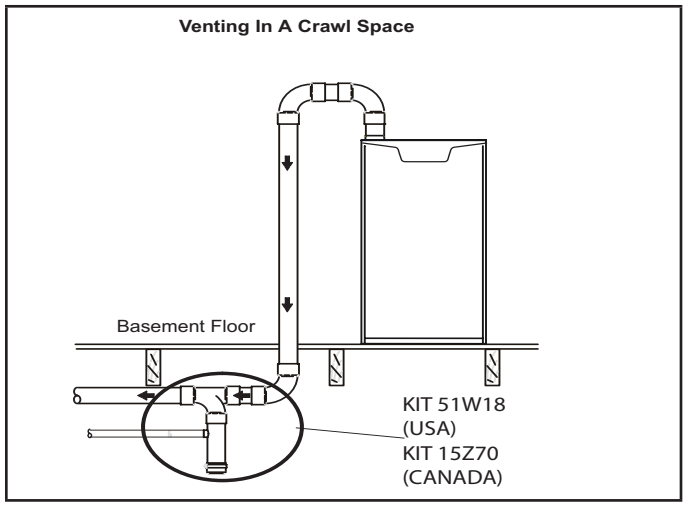

Condensate Piping

This unit is designed for either right- or left-side exit of condensate piping in up flow applications. In horizontal applications, the condensate trap must extend below the unit. An 8” service clearance is required for the condensate trap. Refer to FIGURE 45 and FIGURE 47 for condensate trap locations. FIGURE 53 shows trap assembly using 1/2” PVC or 3/4” PVC.

NOTE - *If necessary the condensate trap may be installed up to 5’ away from the furnace. Use PVC pipe to connect trap to furnace condensate outlet. Piping from furnace must slope down a minimum of 1/4” per ft. toward trap.*

1 - Determine which side condensate piping will exit the unit, location of trap, field-provided fittings and length of PVC pipe required to reach available drain.

NOTE - *Do not remove the rubber grommet used to seal the cabinet on the side not used when installing the condensate trap.*

2 - Use a large flat head screw driver or a 1/2” drive socket extension and remove plug (figure 45) from the cold end header box at the appropriate location on the side of the unit. Install provided 3/4 NPT street elbow fitting into cold end header box. Use Teflon tape or appropriate pipe dope.

NOTE - *Cold end header box drain plugs are factory installed. Check the unused plug for tightness to prevent leakage.*

3 - Install the cap over the clean out opening at the base of the trap. Secure with clamp. See FIGURE 53.

4 - Install drain trap using appropriate PVC fittings, glue all joints. Glue the provided drain trap as shown in FIGURE 53. Route the condensate line to an open drain. Condensate line must maintain a 1/4” downward slope from the furnace to the drain.

5 - Figures 48 and 50 show the furnace and evaporator coil using a separate drain. If necessary the condensate line from the furnace and evaporator coil can drain together. See FIGURE 49, FIGURE 51 and FIGURE 52.

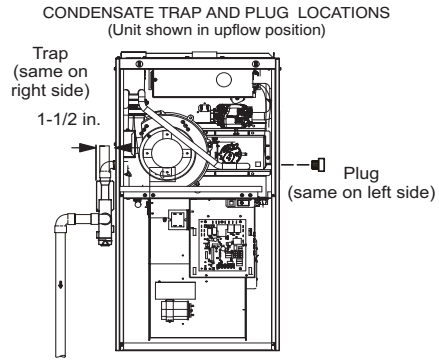

NOTE - In upflow applications where side return air filter is installed on same side as the condensate trap, filter rack must be installed beyond condensate trap or trap must be re-located to avoid interference.

FIGURE 45

Upflow furnace (FIGURE 51) - In upflow furnace applications the field provided vent must be a minimum 1” to a maximum 2” length above the condensate drain outlet connection. Any length above 2” may result in a flooded heat exchanger if the combined primary drain line were to become restricted.

Horizontal furnace (FIGURE 52) - In horizontal furnace applications the field provided vent must be a minimum 4” to a maximum 5” length above the condensate drain outlet connection. Any length above 5” may result in a flooded heat exchanger if the combined primary drain line were to become restricted.

NOTE - *In horizontal applications it is recommended to install a secondary drain pan underneath the unit and trap assembly.*

NOTE - *Appropriately sized tubing and barbed fitting may be used for condensate drain. Attach to the drain on the trap using a hose clamp. See FIGURE 46.*

6 - If unit will be started immediately upon completion of installation,prime trap per procedure outlined in Unit Start- Up section.

Field Provided Drain Components

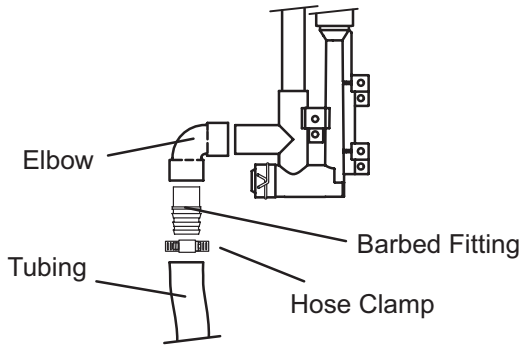

FIGURE 46

⚠ CAUTION

Do not use copper tubing or existing copper condensate lines for drain line.

Condensate line must slope downward away from the trap to drain. If drain level is above condensate trap, condensate pump must be used. Condensate drain line should be routed within the conditioned space to avoid freezing of condensate and blockage of drain line. If this is not possible, a heat cable kit may be used on the condensate trap and line. Heating cable kit is available from Lennox in various lengths; 6 ft. (1.8m) - kit no. 26K68 and 24 ft. (7.3m) - kit no. 26K69.

CONDENSATE TRAP LOCATIONS

(Unit shown in upflow position with remote trap)

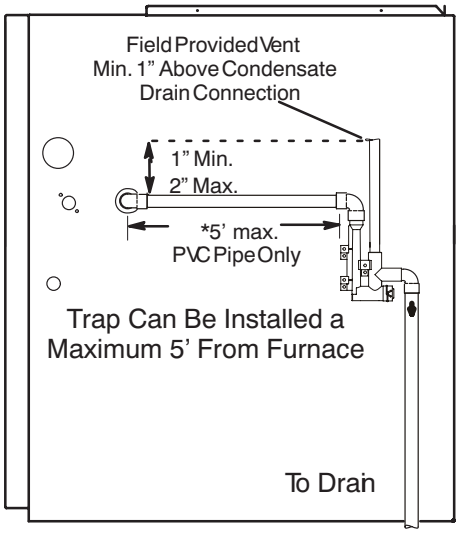

*Piping from furnace must slope down a minimum 1/4" per ft. toward trap

FIGURE 47

Furnace With Evaporator Coil Using A Separate Drain

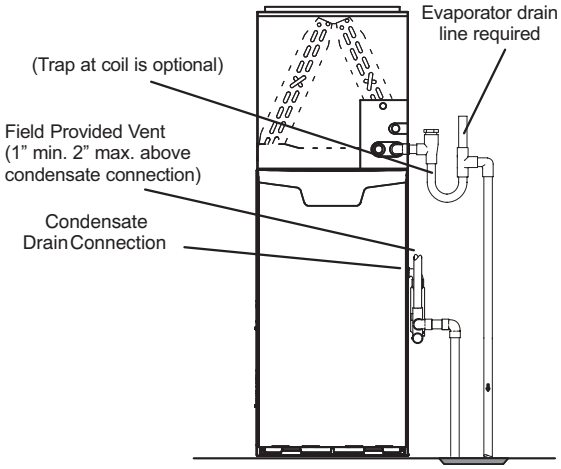

FIGURE 48

Condensate Trap With Optional Overflow Switch

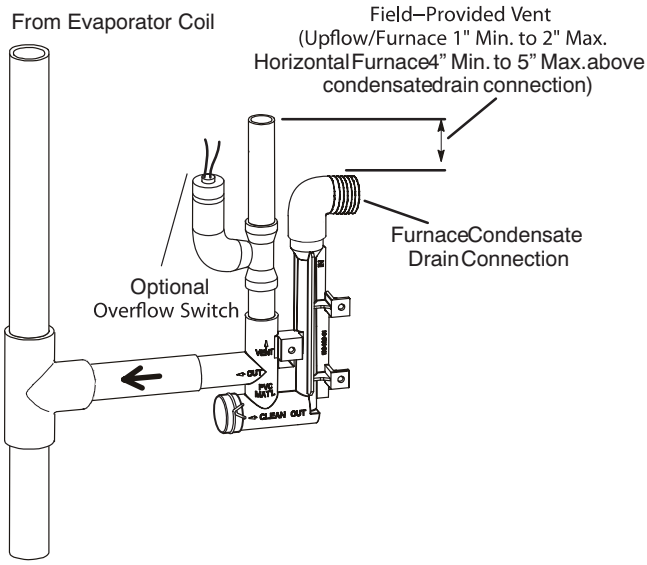

FIGURE 49

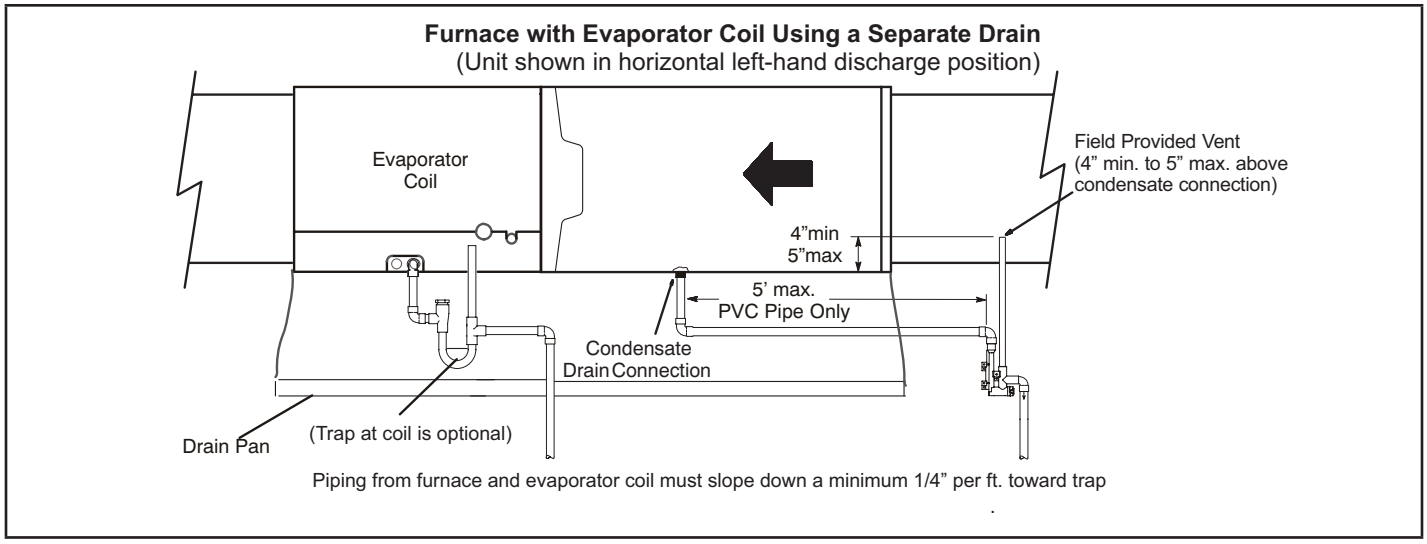

FIGURE 50

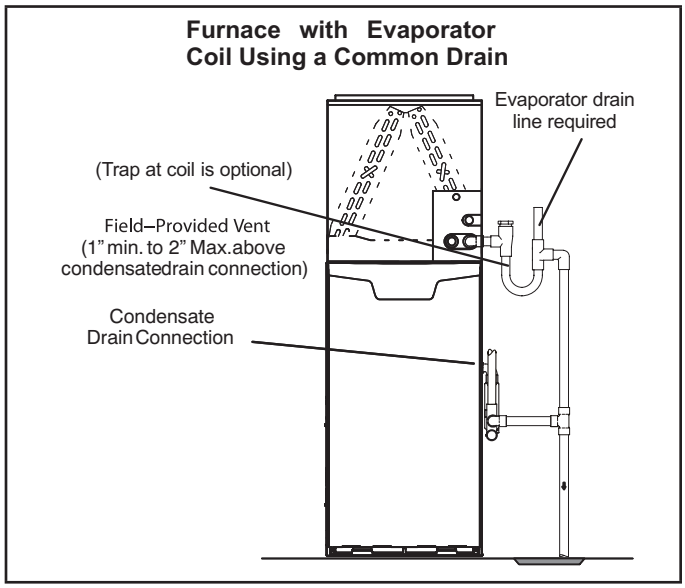

FIGURE 51

⚠ IMPORTANT

When combining the furnace and evaporator coil drains together, the A/C condensate drain outlet must be vented to relieve pressure in order for the furnace pressure switch to operate properly.

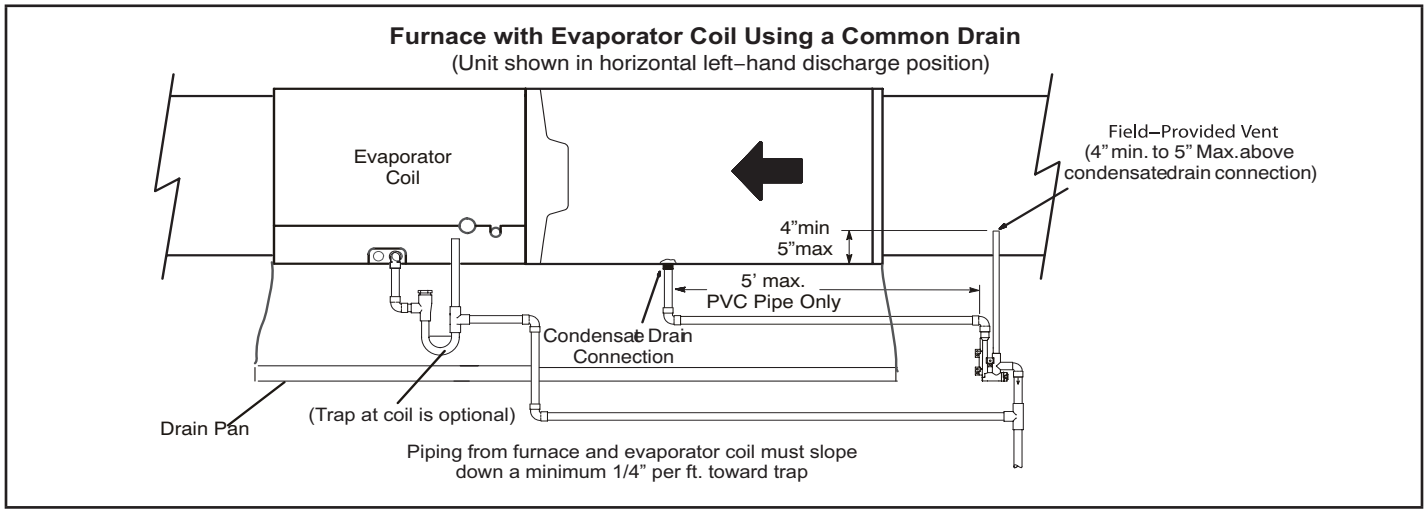

FIGURE 52

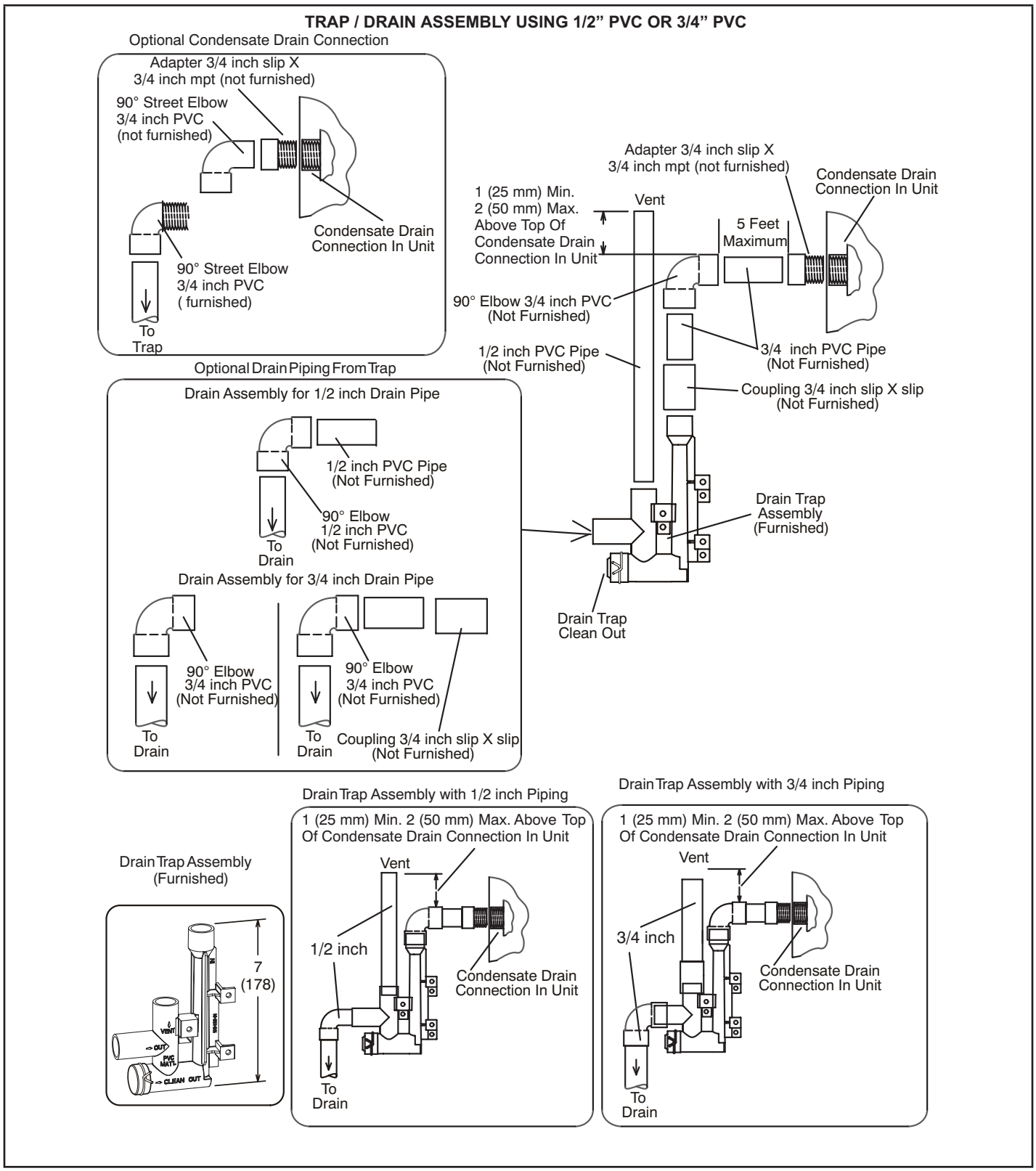
TRAP / DRAIN ASSEMBLY USING 1/2" PVC OR 3/4" PVC
Optional Condensate Drain Connection
Adapter 3/4 inch slip X
3/4 inch mpt (not furnished)
90° Street Elbow
3/4 inch PVC
(not furnished)
Condensate Drain
Connection In Unit
90° Street Elbow
3/4 inch PVC
(furnished)
To
Trap
Adapter 3/4 inch slip X
3/4 inch mpt (not furnished)
Condensate Drain
Connection In Unit
1 (25 mm) Min.
2 (50 mm) Max.
Above Top Of
Condensate Drain
Connection In Unit
Vent
5 Feet
Maximum
90° Elbow 3/4 inch PVC
(Not Furnished)
1/2 inch PVC Pipe
(Not Furnished)
3/4 inch PVC Pipe
(Not Furnished)
Coupling 3/4 inch slip X slip
(Not Furnished)
Optional Drain Piping From Trap
Drain Assembly for 1/2 inch Drain Pipe
1/2 inch PVC Pipe
(Not Furnished)
90° Elbow
1/2 inch PVC
(Not Furnished)
To
Drain
Drain Assembly for 3/4 inch Drain Pipe
90° Elbow
3/4 inch PVC
(Not Furnished)
To
Drain
90° Elbow
3/4 inch PVC
(Not Furnished)
To
Drain
Coupling 3/4 inch slip X slip
(Not Furnished)
Drain Trap
Assembly
(Furnished)
Drain Trap
Clean Out
Drain Trap Assembly
(Furnished)
7
(178)
Drain Trap Assembly with 1/2 inch Piping
1 (25 mm) Min. 2 (50 mm) Max. Above Top
Of Condensate Drain Connection In Unit
Vent
1/2 inch
Condensate Drain
Connection In Unit
To
Drain
Drain Trap Assembly with 3/4 inch Piping
1 (25 mm) Min. 2 (50 mm) Max. Above Top
Of Condensate Drain Connection In Unit
Vent
3/4 inch
Condensate Drain
Connection In Unit
To
Drain

FIGURE 53

III-START-UP

A-Preliminary and Seasonal Checks

1 - Inspect electrical wiring, both field and factory installed for loose connections. Tighten as required.

2 - Check voltage at disconnect switch. Voltage must be within range listed on the nameplate. If not, consult the power company and have voltage condition corrected before starting unit.

3 - Inspect condition of condensate traps and drain assembly. Disassemble and clean seasonally.

B-Heating Start-Up

BEFORE LIGHTING the unit, smell all around the furnace area for gas. Be sure to smell next to the floor because some gas is heavier than air and will settle on the floor.

The gas valve on the ML193UHE is equipped with a gas control switch. Use only your hand to move the switch. Never use tools. If the the switch will not move by hand, replace the valve. Do not try to repair it. Force or attempted repair may result in a fire or explosion.

Placing the furnace into operation:

ML193UHE units are equipped with a SureLight ignition system. Do not attempt to manually light burners on this furnace. Each time the thermostat calls for heat, the burners will automatically light The ignitor does not get hot when there is no call for heat on units with SureLight ignition system.

Priming Condensate Trap

The condensate trap should be primed with water prior to start-up to ensure proper condensate drainage. Either pour 10 fl. oz. (300 ml) of water into the trap, or follow these steps to prime the trap:

1 - Follow the lighting instructions to place the unit into operation.

2 - Set the thermostat to initiate a heating demand.

3 - Allow the burners to fire for approximately 3 minutes.

4 - Adjust the thermostat to deactivate the heating demand.

5 - Wait for the combustion air inducer to stop. Set the thermostat to initiate a heating demand and again allow the burners to fire for approximately 3 minutes.

6 - Adjust the thermostat to deactivate the heating demand and again wait for the combustion air inducer to stop. At this point, the trap should be primed with sufficien water to ensure proper condensate drain operation.

⚠ WARNING

If you do not follow these instructions exactly, a fire or explosion may result causing property damage, personal injury or death.

Gas Valve Operation (FIGURE 54)

1 - **STOP!** Read the safety information at the beginning of this section.

2 - Set the thermostat to the lowest setting.

3 - Turn off all electrical power to the unit.

4 - This furnace is equipped with an ignition device which automatically lights the burners. Do **not** try to light the burners by hand.

5 - Remove the upper access panel.

6 - Move gas valve switch to **OFF.** See FIGURE 54.

7 - Wait five minutes to clear out any gas. If you then smell gas, **STOP!** Immediately call your gas supplier from a neighbor's phone. Follow the gas supplier's instructions. If you do not smell gas go to next step.

8 - Move gas valve switch to ON. See FIGURE 54.

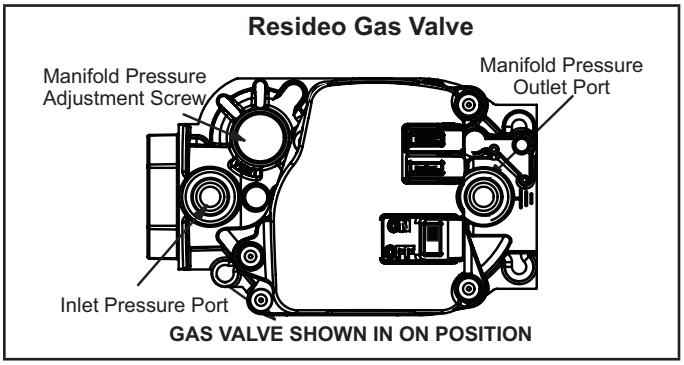

FIGURE 54

9 - Replace the upper access panel.

10 - Turn on all electrical power to to the unit.

11 - Set the thermostat to desired setting.

NOTE - *When unit is initially started, steps 1 through 11 may need to be repeated to purge air from gas line.*

12 - If the appliance will not operate, follow the instructions "Turning Off Gas to Unit" and call your service technician or gas supplier.

Turning Off Gas to Unit

1 - Set the thermostat to the lowest setting.

2 - Turn off all electrical power to the unit if service is to be performed.

3 - Remove the upper access panel.

4 - Move gas valve switch to OFF.

5 - Replace the upper access panel.

Failure To Operate

If the unit fails to operate, check the following:

1 - Is the thermostat calling for heat?

2 - Are access panels securely in place?

3 - Is the main disconnect switch closed?

4 - Is there a blown fuse or tripped breaker?

5 - Is the filter dirty or plugged? Dirty or plugged filters will cause the limit control to shut the unit off.

6 - Is gas turned on at the meter?

7 - Is the manual main shut-off valve open?

8 - Is the internal manual shut-off valve open?

9 - Is the unit ignition system in lockout? If the unit locks out again, inspect the unit for blockages.

IV-HEATING SYSTEM SERVICE CHECKS

A-C.S.A. Certification

All units are C.S.A. design certified without modifications. Refer to the ML193UHE Operation and Installation Instruction Manual Information.

B-Gas Piping

⚠ IMPORTANT

If a flexible gas connector is required or allowed by the authority that has jurisdiction, black iron pipe shall be installed at the gas valve and extend outside the furnace cabinet. The flexible connector can then be added between the black iron pipe and the gas supply line.

⚠ CAUTION

Do not over torque (800 in-lbs) or under torque (350 in-lbs) when attaching the gas piping to the gas valve.

Gas supply piping should not allow more than 0.5”W.C. drop in pressure between gas meter and unit. Supply gas pipe must not be smaller than unit gas connection. Compounds used on gas piping threaded joints should be resistant to action of liquefied petroleum gases.

C-Testing Gas Piping

⚠ IMPORTANT

In case emergency shutdown is required, turn off the main shut-off valve and disconnect the main power to unit. These controls should be properly labeled by the installer.

When pressure testing gas lines, the gas valve must be disconnected and isolated. Gas valves can be damaged if subjected to more than 0.5psig (14” W.C.). See FIGURE 55.

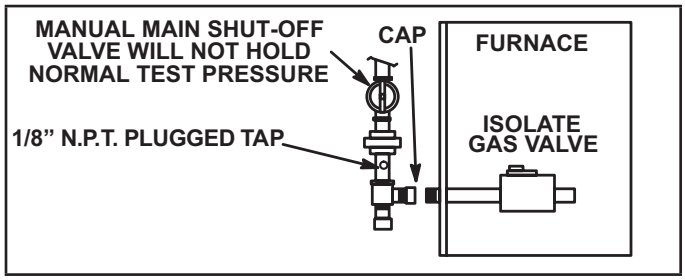

FIGURE 55

When checking piping connections for gas leaks, use preferred means. Kitchen detergents can cause harmful corrosion on various metals used in gas piping. Use of a specialty Gas Leak Detector is strongly recommended. It is available through Lennox under part number 31B2001. See Corp. 8411-L10, for further details.

⚠ WARNING

Do not use matches, candles, flame or any other source of ignition to check for gas leaks.

D-Testing Gas Supply Pressure Gas Flow (Approximate)

TABLE 17

GAS METER CLOCKING CHART				
ML193 Unit	Seconds for One Revolution			
	Natural		LP	
	1 cu ft Dial	2 cu ft Dial	1 cu ft Dial	2 cu ft Dial
-030	120	240	300	600
-045	80	160	200	400
-070	55	110	136	272
-090	41	82	102	204
-110	33	66	82	164
Natural-1000 btu/cu ft LP-2500 btu/cu ft				

Furnace should operate at least 5 minutes before checking gas flow. Determine time in seconds for two revolutions of gas through the meter. (Two revolutions assures a more accurate time.) Divide by two and compare to time in TABLE 17. If manifold pressure matches TABLE 19 and rate is incorrect, check gas orifices for proper size and restriction. Remove temporary gas meter if installed.

NOTE - *To obtain accurate reading, shut off all other gas appliances connected to meter.*

Supply Pressure Measurement

When testing supply gas pressure, use the 1/8” N.P.T. plugged tap or pressure post located on the gas valve to facilitate test gauge connection. See FIGURE 54. Check gas line pressure with unit firing at maximum rate. Low pressure may result in erratic operation or underfire. High pressure can result in permanent damage to gas valve or overfire.

On multiple unit installations, each unit should be checked separately, with and without units operating. Supply pressure must fall within range listed in TABLE 19.

Manifold Pressure Measurement

Follow the steps below and use FIGURE 56 as a reference. Gas manifold Kit 10L34 provides additional components if needed.

1 - Connect the test gauge positive side “+“ to manifold pressure tap on gas valve.
2 - Tee into the gas valve regulator vent hose and connect to test gauge negative “-”.
3 - Start unit and let run for 5 minutes to allow for steady state conditions.
4 - After allowing unit to stabilize for 5 minutes, record manifold pressure and compare to value given in table 19.
5 - Shut unit off and remove manometer as soon as an accurate reading has been obtained. Take care to replace pressure tap plug.
6 - Start unit and perform leak check. Seal leaks if found.

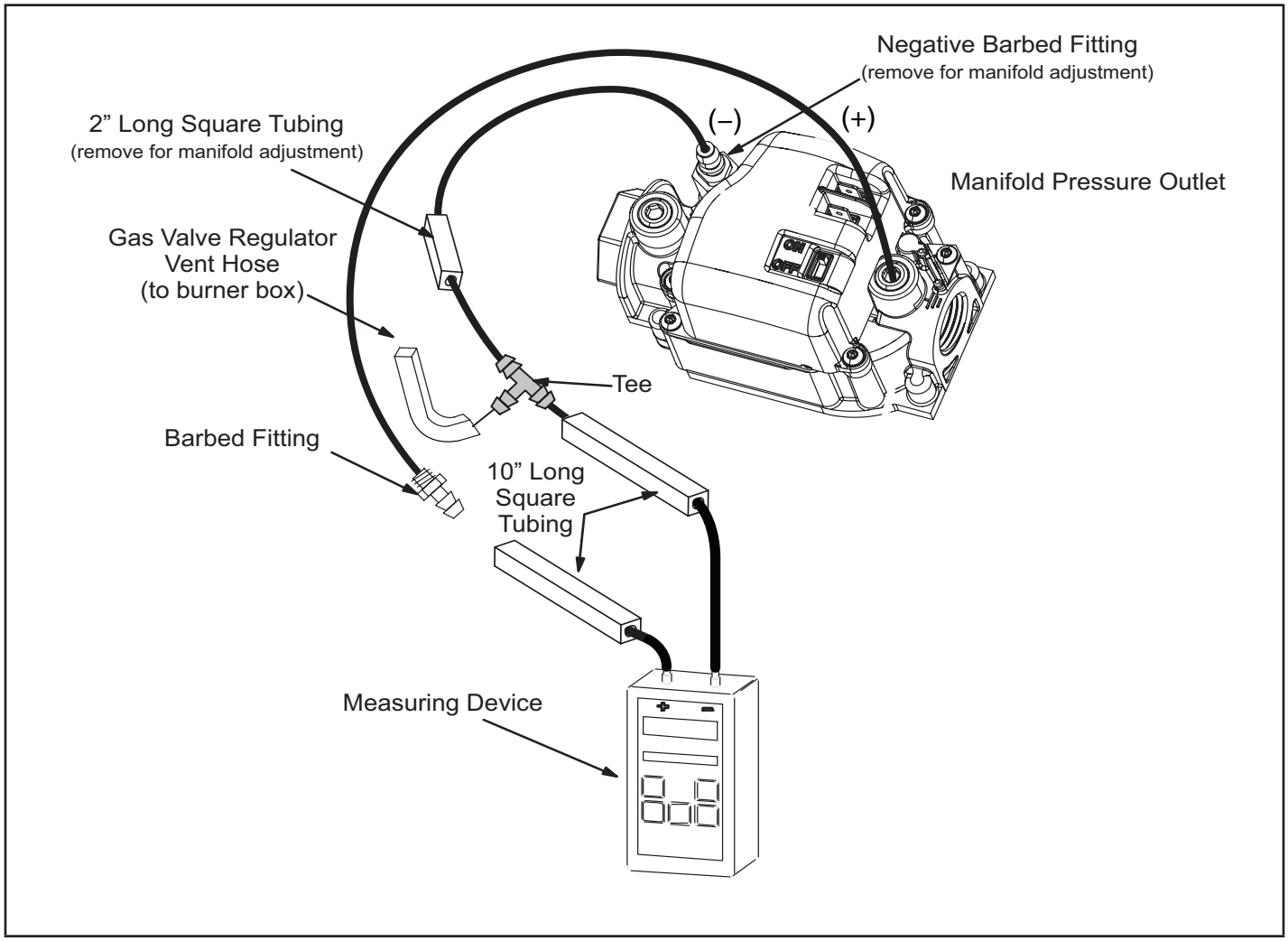

FIGURE 56

E-Proper Combustion

Furnace should operate minimum 15 minutes with correct manifold pressure and gas flow rate before checking combustion. Take combustion sample beyond the flue outlet and compare to TABLE 18.

TABLE 18

ML193 Unit	CO_2 Nat	CO_2 LP
030	6.5 - 7.5	7.5 - 8.5
045	7.0 - 9.0	8.0 - 10.0
070		
090		
110		
The maximum carbon monoxide reading should not exceed 100 pm.		

F-High Altitude

NOTE - *In Canada, certification for installations at elevations over 4500 feet (1372 m) is the jurisdiction of local authorities.*

Units may be installed at altitudes up to 10,000 ft. above sea level. See TABLE 19 for de-rate manifold values. Units installed at altitude of 7501 - 10,000 feet require an orifice change. Units installed at altitude of 4501 - 10,000 feet require a pressure switch change which can be ordered separately.

TABLE 20 lists conversion kit and pressure switch requirements at varying altitudes.

The combustion air pressure switch is factory-set and requires no adjustment.

NOTE - *A natural to LP/propane gas changeover kit is necessary to convert this unit. Refer to the changeover kit installation instruction for the conversion procedure.*

TABLE 19

Manifold and Supply Line Pressure 0-10,000ft.

ML193 Unit	Gas	Manifold Pressure in. wg.					Supply Line Pressure in. w.g. 0 - 10000 ft.	
		0 - 4500 ft	4501 - 5500 ft	5501 - 6500 ft	6501 - 7500 ft	7501 - 10,000 ft		
All Models	Natural	3.5	3.3	3.2	3.1	3.5	4.5	13.0
	L.P. Propane	10.0	9.4	9.1	8.9	10.0	11.0	13.0

NOTE - A natural to L.P. propane gas changeover kit is necessary to convert this unit. Refer to the changeover kit installation instruction for the conversion procedure.

TABLE 20

Conversion Kit and Pressure Switch Requirements at Varying Altitudes

ML193 Model	Natural to LP/ Propane	High Altitude Natural Burner Orifice Kit	LP/Propane to Natural	High Altitude LP/ Propane Burner Orifice Kit	High Altitude Pressure Switch	
	0 - 7500 ft (0 - 2286m)	7501 - 10,000 ft (2286 - 3038m)	0 - 7500 ft (0 - 2286m)	7501 - 10,000 ft (2286 - 3038m)	4501 - 7500 ft (1373 - 2286m)	7501 -10,000 ft (2286 - 3048m)
-030	17H63	14C90	N/A	17H66	11U65	11U66
-045	*11K49	73W37	*73W81	*11K44		
-070						
-090						
-110						
* Conversion requires installation of a gas valve manifold spring which is provided with the gas conversion kit. Pressure switch is factory set. No adjustment necessary. All models use the factory-installed pressure switch from 0-4500 feet (0-1370 m).						

G- Proper Ground and Voltage

⚠ WARNING

Electric Shock Hazard. Can cause injury or death. Unit must be properly grounded in accordance with national and local codes.

A poorly grounded furnace can contribute to premature ignitor failure. Use the following procedure to check for ground and voltage to the integrated control.

1 - Measure the AC voltage between Line Neutral (spade terminals) and “C” terminal (low voltage terminal block) on the integrated control. See FIGURE 57. A wide variation in the voltage between Line Neutral and “C” as a function of load indicates a poor or partial ground. Compare the readings to the table below. If the readings exceed the maximum shown in TABLE 21, make repairs before operating the furnace.

2 - In addition, measure the AC voltage from Line Hot to Line Neutral (spade terminals) on the integrated control. See figure 57. This voltage should be in the range of 97 to 132 Vac

Note - *FIGURE 57 is a typical ignition control illustration.*

TABLE 21

Furnace Status	Measurement VAC	
	Expected	Maximum
Power On Furnace Idle	0.3	2
CAI / Ignitor Energized	0.75	5
Indoor Blower Energized	Less than 2	10

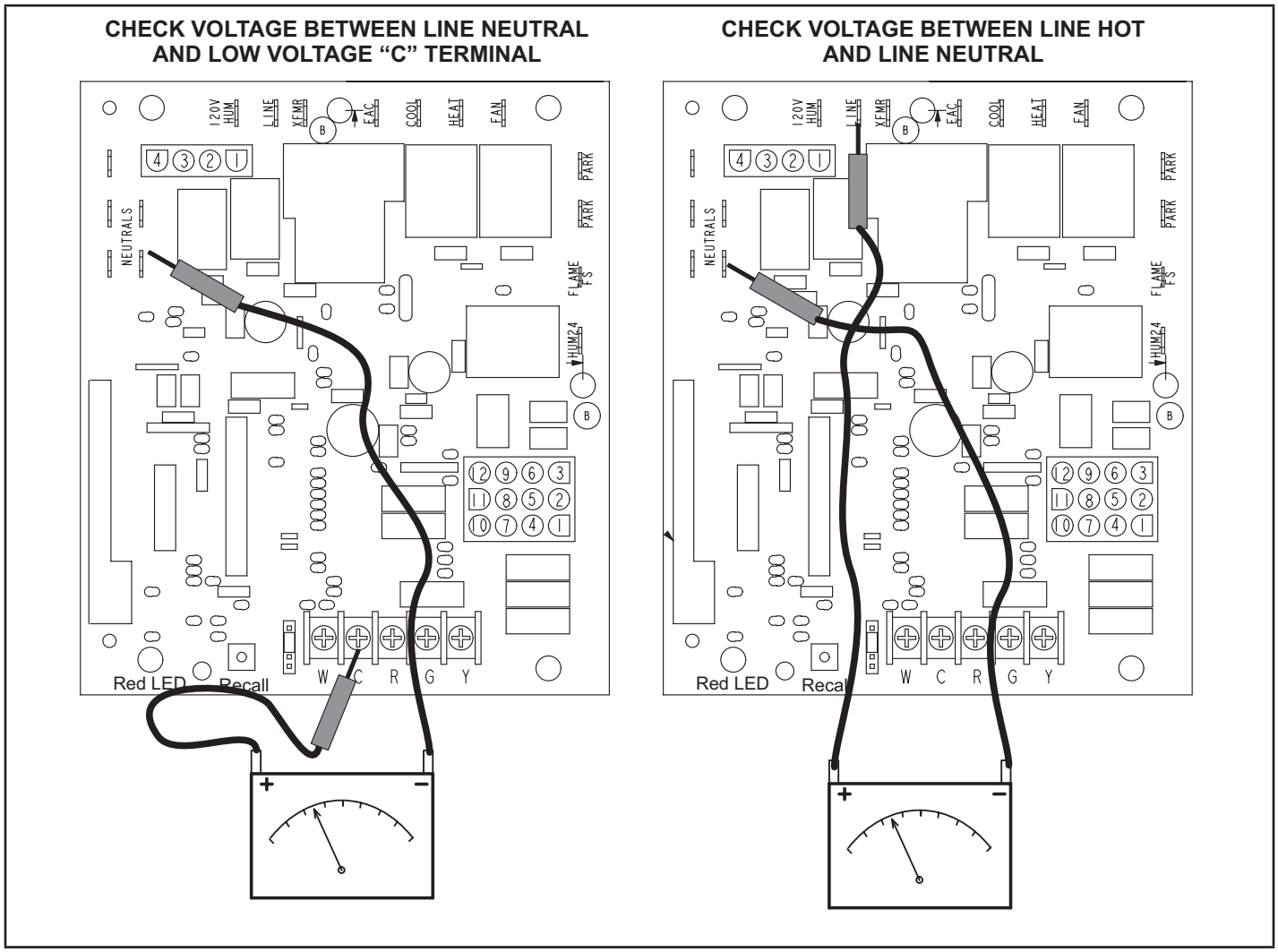

FIGURE 57

V-TYPICAL OPERATING CHARACTERISTICS

A-Blower Operation and Adjustment1

***NOTE-** The following is a generalized procedure and does not apply to all thermostat controls.*

1 - Blower operation is dependent on thermosta control system

2 - Generally, blower operation is set at thermostat subbase fan switch. With fan switch in **ON** position, blower operates continuously. With fan switch in AUTO position, blower cycles with demand or runs continuously while heating or cooling circuit cycles.

3 - Depending on the type of indoor thermostat, blower and entire unit will be off when the system switch is in **OFF** position.

B-Temperature Rise (FIGURE 58)

Temperature rise for ML193UH units depends on unit input, blower speed, blower horsepower and static pressure as marked on the unit rating plate. The blower speed must be set for unit operation within the range of “TEMP. RISE °F” listed on the unit rating plate.

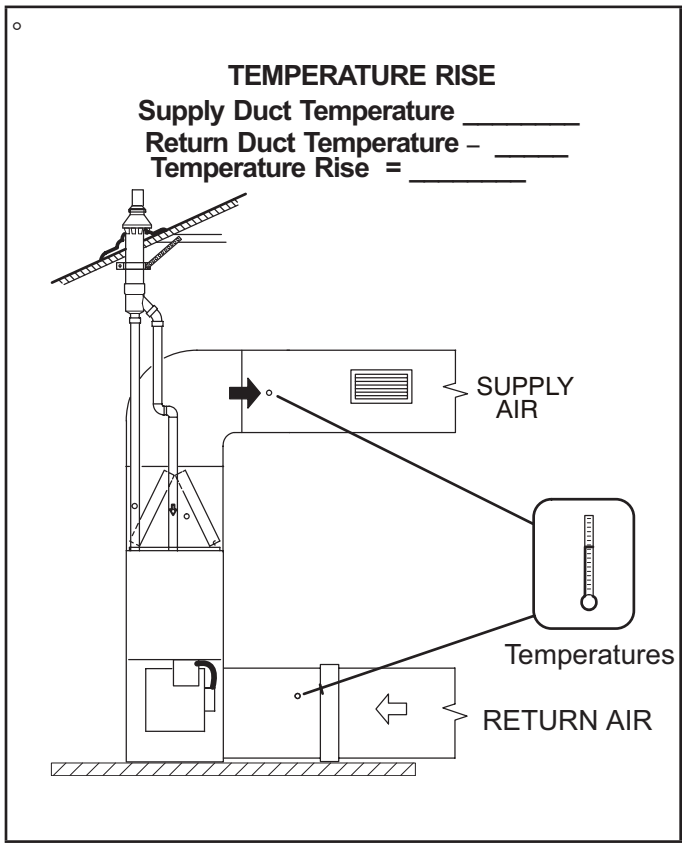

FIGURE 58

C-External Static Pressure

1 - Tap locations shown in FIGURE 59.

2 - Punch a 1/4” diameter hole in supply and return air plenums. Insert manometer hose flush with inside edge of hole or insulation. Seal around the hose with permagum. Connect the zero end of the manometer to the discharge (supply) side of the system. On ducted systems, connect the other end of manometer to the return duct as above.

3 - With only the blower motor running and the evaporator coil dry, observe the manometer reading. Adjust blower motor speed to deliver the air desired according to the job requirements. For heating speed external static pressure drop must not be more than 0.5” W.C. For cooling speed external static pressure drop must not be more than 0.8” W.C.

4 - Seal the hole when the check is complete.

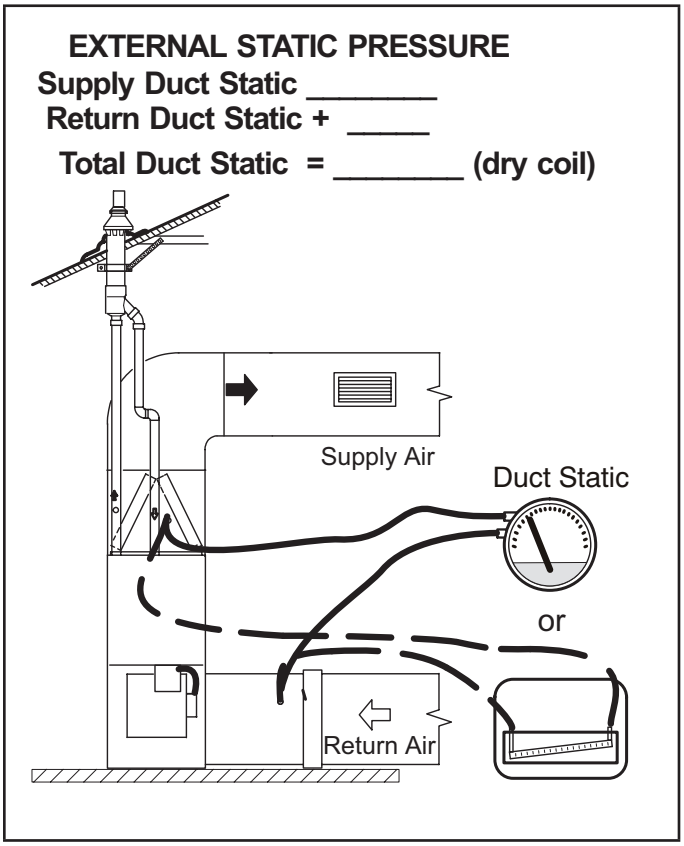

FIGURE 59

D-Blower Speed Taps

Blower speed tap changes are made on the integrated control. See FIGURE 3 or FIGURE 5. The heating tap is connected to the “HEAT” terminal and the cooling tap is connected to the “COOL” terminal. On all units the continuous blower tap is connected to the “FAN” terminal. Unused taps must be secured on two dummy terminals labeled ”PARK. To change out existing speed tap, turn off power and switch out speed tap with tap connected to “PARK”. See blower speed tap table on unit diagram for motor tap colors for each speed.

⚠ WARNING

ELECTRICAL SHOCK, FIRE, OR EXPLOSION HAZARD.

Failure to follow safety warnings exactly could result in dangerous operation, serious injury, death or property damage.

Improper servicing could result in dangerous operation, serious injury, death, or property damage. Before servicing, disconnect all electrical power to the furnace.

At the beginning of each heating season, system should be checked as follows by a qualified service technician:

Blower

Check the blower wheel for debris and clean if necessary. The blower motors are prelubricated for extended bearing life. No further lubrication is needed.

⚠ WARNING

The blower access panel must be securely in place when the blower and burners are operating. Gas fumes, which could contain carbon monoxide, can be drawn into living space resulting in personal injury or death.

Filters

All air filters are installed external to the unit. Filters should be inspected monthly. Clean or replace the filters when necessary to ensure proper furnace operation. lists recommended filter sizes.

⚠ WARNING

If a highefficiency filter is being installed as part of this system to ensure better indoor air quality, the filter must be properly sized. Highefficiency filters have a higher static pressure drop than standardefficiency glass/foam filters.

If the pressure drop is too great, system capacity and performance may be reduced. The pressure drop may also cause the limit to trip more frequently during the winter and the indoor coil to freeze in the summer, resulting in an increase in the number of service calls.

Before using any filter with this system, check the specifications provided by the filter manufacturer against the data given in the appropriate Lennox Product Specifications bulletin. Additional information is provided in Service and Application Note ACC002 (August 2000).

TABLE 22

Furnace Cabinet Width	Filter Size	
	Side Return	Bottom Return
17-1/2”	16 X 25 X 1 (1)	16 X 25 X 1 (1)
21”	16 X 25 X 1 (1)	20 X 25 X 1 (1)

Check the exhaust and air intake pipes and all connections for tightness and to make sure there is no blockage.

NOTE - *After any heavy snow, ice or frozen fog event the furnace vent pipes may become restricted. Always check the vent system and remove any snow or ice that may be obstructing the plastic intake or exhaust pipes.*

Electrical

⚠ WARNING

Fire Hazard. Use of aluminum wire with this product may result in a fire, causing property damage, severe injury or death. Use copper wire only with this product.

⚠ WARNING

Failure to use properly sized wiring and circuit breaker may result in property damage. Size wiring and circuit breaker(s) per Product Specifications bulletin (EHB) and unit rating plate.

⚠ WARNING

Electric Shock Hazard. Can cause injury or death. Unit must be properly grounded in accordance with national and local codes.

1 - Check all wiring for loose connections.
2 - Check for the correct voltage at the furnace (furnace operating). Correct voltage is 120VAC + 10%
3 - Check amp-draw using a true RMS meter on the blower motor with blower access panel in place.

Winterizing and Condensate Trap Care

1 - Turn off power to the furnace.
2 - Have a shallow pan ready to empty condensate water.
3 - Remove the clean out cap from the condensate trap and empty water. Inspect the trap then reinstall the clean out cap.

Condensate Hose Screens (FIGURE 60)

Check the condensate hose screens for blockage and clean if necessary.

1 - Turn off power to the unit.
2 - Remove hoses from cold end header box. Twist and pull screens to remove.
3 - Inspect screens and rinse with tap water if needed.
4 - Reinstall screens, reconnect hoses and turn on power to unit.

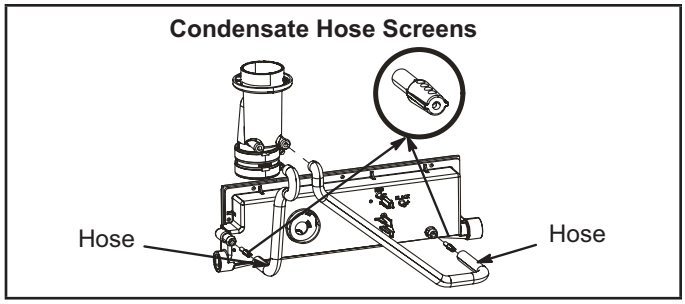

FIGURE 60

Cleaning Heat Exchanger

If cleaning the heat exchanger becomes necessary, follow the below procedures and refer to figure 1 when disassembling unit. Use papers or protective covering in front of furnace while removing heat exchanger assembly.

1 - Turn off electrical and gas supplies to the furnace.
2 - Remove the burner access panel.
3 - Mark all gas valve wires and disconnect them from valve.
4 - Remove gas supply line connected to gas valve.
5 - Remove sensor wire from flame sensor. Disconnect 2-pin plug from the ignitor.
6 - Disconnect wires from flame roll-out switches.
7 - Remove four burner assembly screws at the vestibule panel and remove gas valve /manifold and burner box as a single unit.

NOTE - *If necessary, clean burners at this time. Follow procedures outlined in Burner Cleaning section.*

8 - Remove the clean-out cap on trap and drain. Replace cap.
9 - Disconnect condensate drain line from the condensate trap. Remove condensate trap (it may be necessary to cut drain pipe). Remove the 1/2" NPT fitting from the cold end header box. Disconnect drain tubes from cold end header collector box.
10 - Disconnect condensate drain tubes from flue collar. Remove screws that secures flue collar in place. Remove flue collar. It may be necessary to cut the exiting exhaust pipe for removal of the fitting.
11 - Loosen two clamps from flexible no-hub exhaust collar.
12 - Disconnect the 2-pin plug from the combustion air inducer. Remove screws which secure combustion air inducer to collector box. Remove combustion air inducer assembly. Remove ground wire.
13 - Mark and disconnect all combustion air pressure tubing from cold end header collector box.
14 - Mark and remove wires from pressure switch. Remove pressure switch. Keep tubing attached to pressure switch.
15 - Remove electrical junction box from the side of the furnace.
16 - Remove blower access panel.
17 - Mark and disconnect any remaining wiring to heating compartment components. Disengage strain relief bushing and pull wiring and bushing through the hole in the blower deck.
18 - Remove the primary limit from the vestibule panel.
19 - Remove top cap screws to allow top cap to be tilted upward to allow clearance for removing heat exchanger.
20 - Remove two screws from the front cabinet flange at the blower deck. Spread cabinet sides slightly to allow clearance for removal of heat exchanger.
21 - Remove screws along vestibule sides and bottom which secure vestibule panel and heat exchanger assembly to cabinet. Remove two screws from blower rails which secure bottom heat exchanger flange.
22 - Remove heat exchanger from furnace cabinet.
23 - Back wash heat exchanger with soapy water solution or steam. If steam is used it must be below 275°F (135°C) .
24 - Thoroughly rinse and drain the heat exchanger. Soap solutions can be corrosive. Take care to rinse entire assembly.
25 - Reinstall heat exchanger into cabinet making sure that the rear baffle of the heat exchanger assembly is nested under the support located at the rear of the cabinet.
26 - Remove the indoor blower to view this area through the blower opening.
27 - Re-secure the supporting screws along the vestibule sides.
28 - Reinstall blower assembly and reinstall two screws through rails.
29 - Reinstall cabinet screws on front flange at blower deck.
30 - Reinstall screws securing top cap.
31 - Reinstall the primary limit on the vestibule panel.
32 - Route heating component wiring through hole in blower deck and reinsert strain relief bushing.
33 - Reinstall pressure switch and reconnect pressure switch wiring.
34 - Carefully connect combustion air pressure switch hosing from pressure switch to proper stubs on cold end header collector box.
35 - Reinstall 1/2" NPT (if removed) in the cold end header box. Reconnect drain tubing to collector box.
36 - Reinstall condensate trap pipe. Reconnect condensate drain line to the condensate trap.
37 - Reinstall electrical junction box.
38 - Reinstall the combustion air inducer and flexible no hub connector. Reconnect the 2-pin plug to the wire harness.
39 - Reconnect drain tubes between flue collar and cold end header box.

40 - Secure burner assembly to vestibule panel using four existing screws. **Burners are self aligning to center of clam shells.**

41 - Reconnect gas supply line to gas valve.

42 - Reconnect flame roll-out switch wires.

43 - Reconnect sensor wire and reconnect 2-pin plug from ignitor.

44 - Reconnect wires to gas valve.

45 - Replace the blower compartment access panel.

46 - Refer to instruction on verifying gas and electrical connections when re-establishing supplies.

47 - Follow lighting instructions to light and operate furnace for 5 minutes to ensure that heat exchanger is clean and dry and that furnace is operating properly.

48 - Replace heating compartment access panel.

Cleaning the Burner Assembly

1 - Turn off gas and electrical power to the furnace. Remove heating compartment access panel.

2 - Disconnect the gas supply line from the gas valve.

3 - Disconnect and label wires from gas valve.

4 - Disconnect ignitor wiring at 2 circuit plug.

5 - Disconnect and label wires from rollout switch.

6 - Disconnect and label flame sensor wire.

7 - Disconnect and label ground wire from burner/manifold assembly.

8 - Remove four screws that secures burner/manifold assembly to vestibule. Remove the assembly and make note not to allow ignitor plate to dislodge from the assembly.

9 - Gently clean the face of the burners using the soft brush attachment on a vacuum cleaner. Visually inspect the inside of the burners and crossovers for any blockage caused by foreign matter. Remove any blockage

10 - Reinstall the burner/manifold assembly using the existing four screws. **Burners are self aligning to center of clam shells.**

11 - Reconnect ground wire.

12 - Reconnect flame sensor wire.

13 - Reconnect rollout switch wires.

14 - Reconnect ignitor wires.

15 - Reconnect gas valve wires.

16 - Reconnect gas supply line to gas valve.

17 - Refer to instructions on verifying gas and electrical connections when re-establishing supplies.

18 - Follow instructions to place furnace in operation. Run furnace 5 minutes to ensure burners are clean and operating correctly.

19 - Replace heating compartment access panel.

VII-WIRING DIAGRAM AND SEQUENCE OF OPERATION

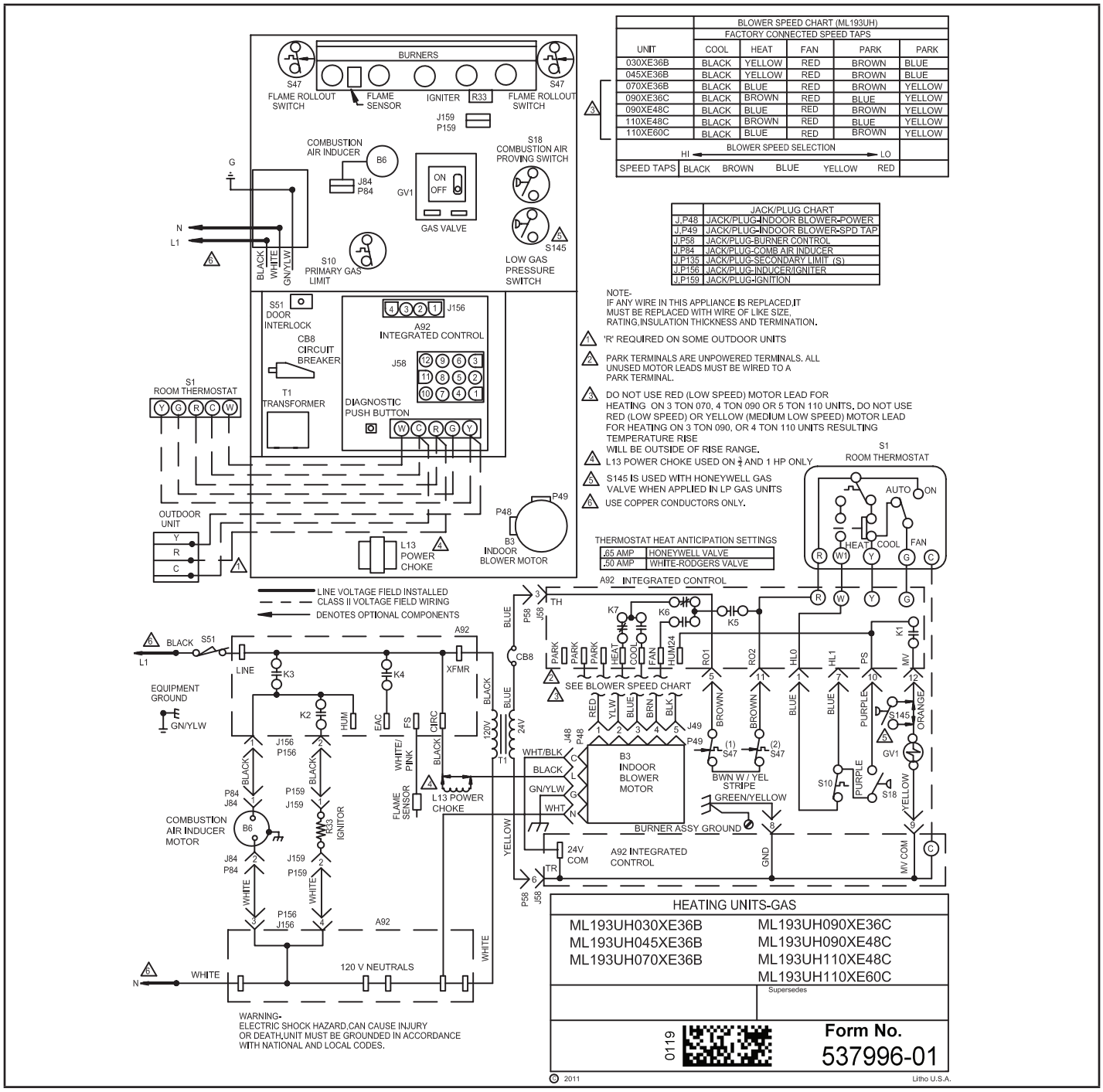

FIGURE 61

1 - When there is a call for heat, W1 of the thermostat energizes W of the furnace control with 24VAC.

2 - S10 primary limit switch and S47 rollout switch are closed. Call for heat can continue.

3 - The integrated control (A92) energizes combustion air inducer B6. Combustion air inducer runs until S18 combustion air prove switch closes (switch must close within 2-1/2 minutes or control goes into 5 minute Watchguard Pressure Switch delay). Once S18 closes, a 15-second pre-purge follows.

4 - The integrated control (A92) energizes ignitor. A 20-second warm-up period begins.

5 - Gas valve opens for a 4-second trial for ignition

6 - Flame is sensed, gas valve remains open for the heat call.

7 - After 30-second delay, the integrated control (A92) energizes indoor blower B3.

8 - When heat demand is satisfied, W1 of the indoor thermostat de-energizes W of the integrated control which de-energizes the gas valve. Combustion air inducer B6 continues a 5-second post-purge period, and indoor blower B3 completes a selected OFF time delay.

Heating Sequence of Operation

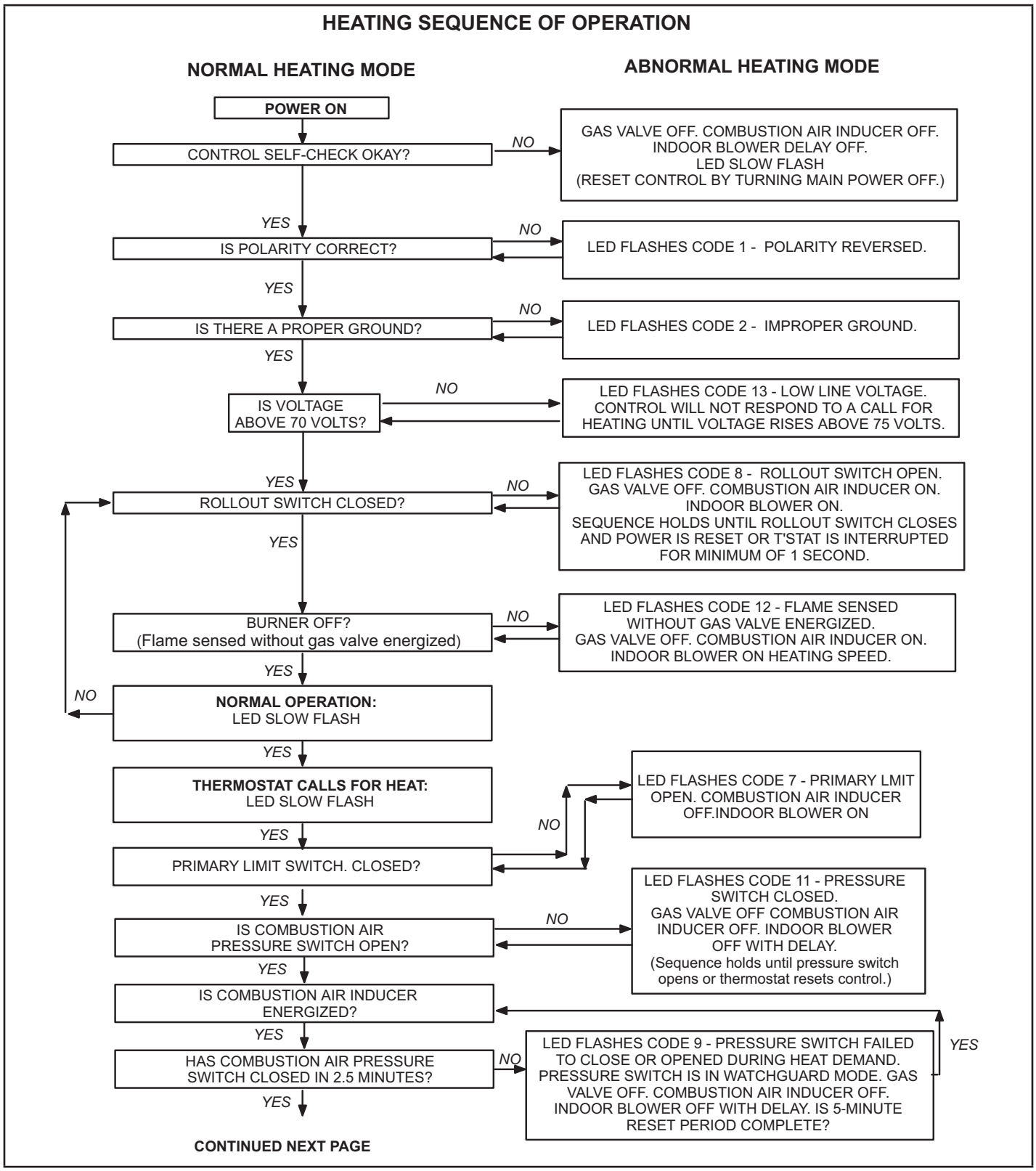

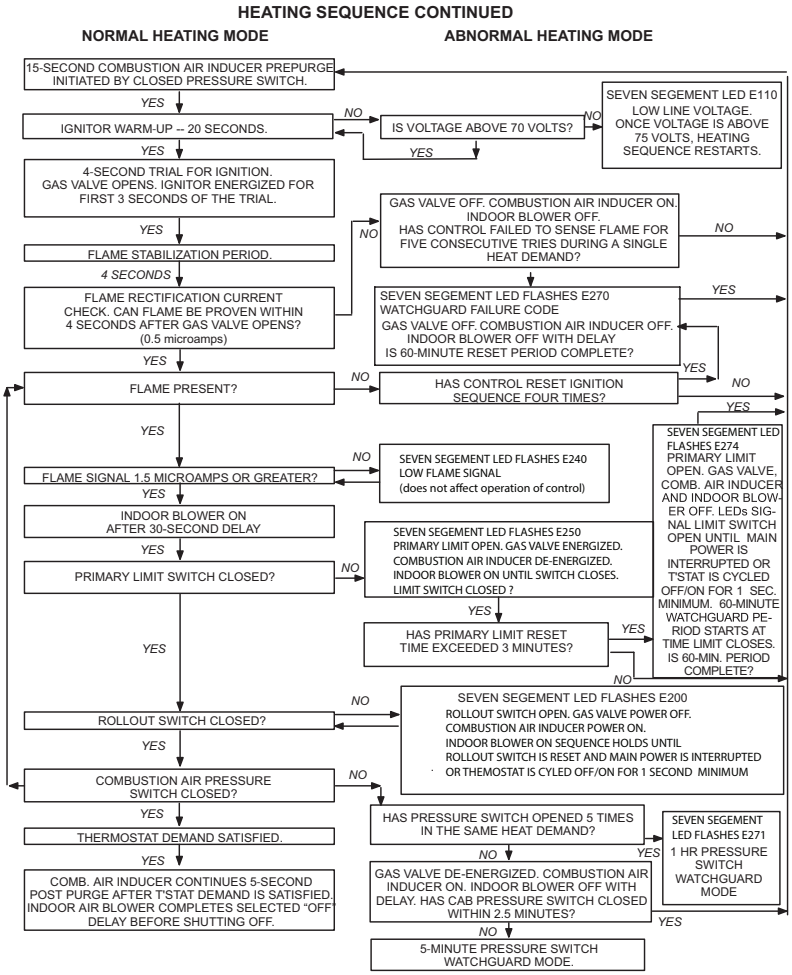
HEATING SEQUENCE CONTINUED
NORMAL HEATING MODE
ABNORMAL HEATING MODE
15-SECOND COMBUSTION AIR INDUCER PREPURGE INITIATED BY CLOSED PRESSURE SWITCH.
YES
IGNITOR WARM-UP -- 20 SECONDS.
NO
IS VOLTAGE ABOVE 70 VOLTS?
NO
SEVEN SEGEMENT LED E110 LOW LINE VOLTAGE. ONCE VOLTAGE IS ABOVE 75 VOLTS, HEATING SEQUENCE RESTARTS.
YES
YES
4-SECOND TRIAL FOR IGNITION. GAS VALVE OPENS. IGNITOR ENERGIZED FOR FIRST 3 SECONDS OF THE TRIAL.
YES
NO
GAS VALVE OFF. COMBUSTION AIR INDUCER ON. INDOOR BLOWER OFF. HAS CONTROL FAILED TO SENSE FLAME FOR FIVE CONSECUTIVE TRIES DURING A SINGLE HEAT DEMAND?
NO
FLAME STABILIZATION PERIOD.
4 SECONDS
FLAME RECTIFICATION CURRENT CHECK. CAN FLAME BE PROVEN WITHIN 4 SECONDS AFTER GAS VALVE OPENS? (0.5 microamps)
SEVEN SEGEMENT LED FLASHES E270 WATCHGUARD FAILURE CODE GAS VALVE OFF. COMBUSTION AIR INDUCER OFF. INDOOR BLOWER OFF WITH DELAY IS 60-MINUTE RESET PERIOD COMPLETE?
YES
YES
YES
FLAME PRESENT?
NO
HAS CONTROL RESET IGNITION SEQUENCE FOUR TIMES?
NO
YES
YES
SEVEN SEGEMENT LED FLASHES E274 PRIMARY LIMIT OPEN. GAS VALVE, COMB. AIR INDUCER AND INDOOR BLOWER OFF. LEDs SIGNAL LIMIT SWITCH OPEN UNTIL MAIN POWER IS INTERRUPTED OR T'STAT IS CYCLED OFF/ON FOR 1 SEC. MINIMUM. 60-MINUTE WATCHGUARD PERIOD STARTS AT TIME LIMIT CLOSES. IS 60-MIN. PERIOD COMPLETE?
NO
FLAME SIGNAL 1.5 MICROAMPS OR GREATER?
NO
SEVEN SEGEMENT LED FLASHES E240 LOW FLAME SIGNAL (does not affect operation of control)
YES
INDOOR BLOWER ON AFTER 30-SECOND DELAY
YES
PRIMARY LIMIT SWITCH CLOSED?
NO
SEVEN SEGEMENT LED FLASHES E250 PRIMARY LIMIT OPEN. GAS VALVE ENERGIZED. COMBUSTION AIR INDUCER DE-ENERGIZED. INDOOR BLOWER ON UNTIL SWITCH CLOSES. LIMIT SWITCH CLOSED ?
YES
HAS PRIMARY LIMIT RESET TIME EXCEEDED 3 MINUTES?
YES
YES
NO
NO
ROLLOUT SWITCH CLOSED?
NO
SEVEN SEGEMENT LED FLASHES E200 ROLLOUT SWITCH OPEN. GAS VALVE POWER OFF. COMBUSTION AIR INDUCER POWER ON. INDOOR BLOWER ON SEQUENCE HOLDS UNTIL ROLLOUT SWITCH IS RESET AND MAIN POWER IS INTERRUPTED OR THEMOSTAT IS CYLED OFF/ON FOR 1 SECOND MINIMUM
YES
COMBUSTION AIR PRESSURE SWITCH CLOSED?
NO
HAS PRESSURE SWITCH OPENED 5 TIMES IN THE SAME HEAT DEMAND?
YES
SEVEN SEGEMENT LED FLASHES E271 1 HR PRESSURE SWITCH WATCHGUARD MODE
YES
THERMOSTAT DEMAND SATISFIED.
NO
YES
GAS VALVE DE-ENERGIZED. COMBUSTION AIR INDUCER ON. INDOOR BLOWER OFF WITH DELAY. HAS CAB PRESSURE SWITCH CLOSED WITHIN 2.5 MINUTES?
YES
COMB. AIR INDUCER CONTINUES 5-SECOND POST PURGE AFTER T'STAT DEMAND IS SATISFIED. INDOOR AIR BLOWER COMPLETES SELECTED "OFF" DELAY BEFORE SHUTTING OFF.
NO
5-MINUTE PRESSURE SWITCH WATCHGUARD MODE.

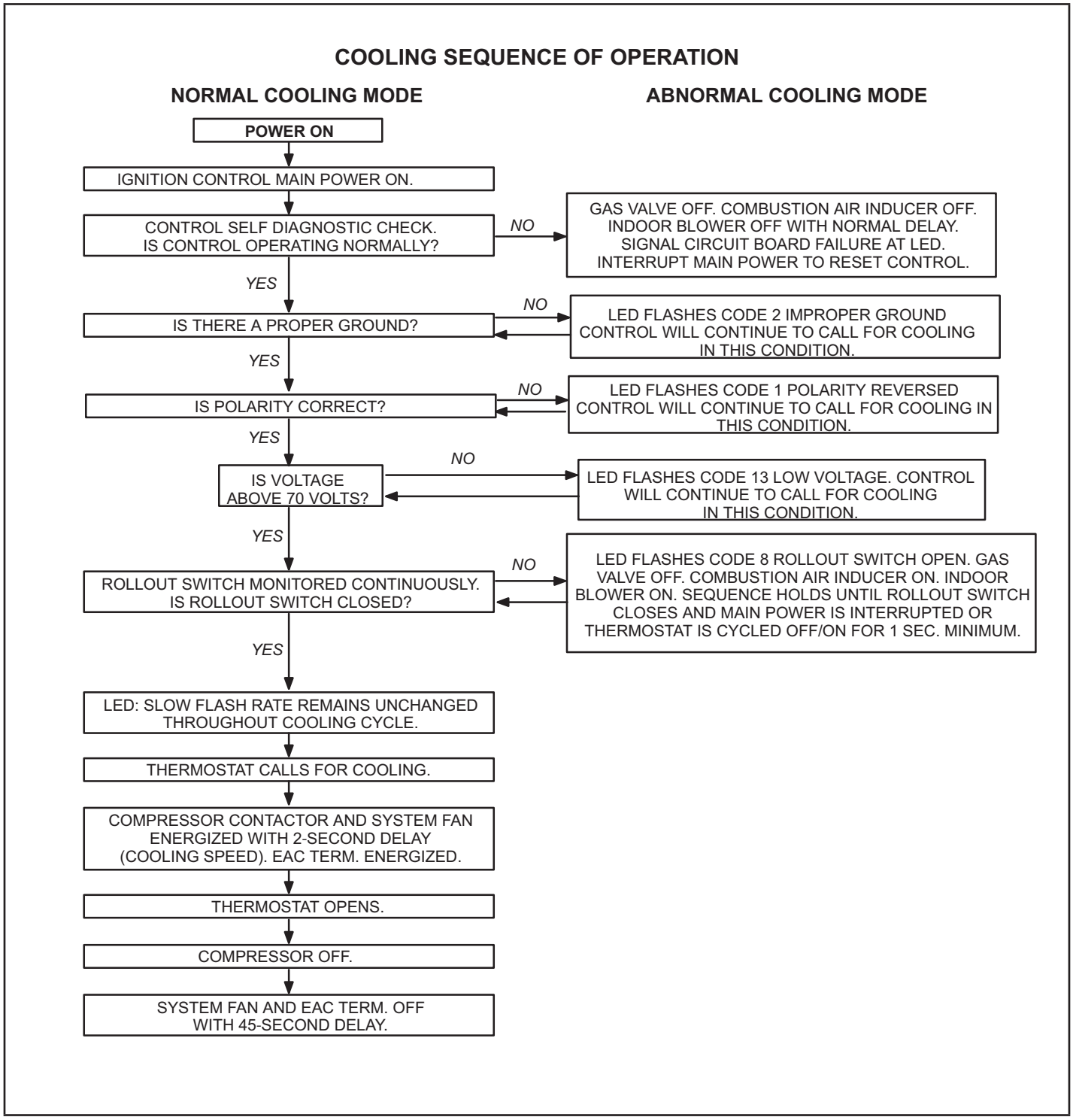
COOLING SEQUENCE OF OPERATION
NORMAL COOLING MODE
ABNORMAL COOLING MODE
POWER ON
IGNITION CONTROL MAIN POWER ON.
CONTROL SELF DIAGNOSTIC CHECK. IS CONTROL OPERATING NORMALLY?
NO
GAS VALVE OFF. COMBUSTION AIR INDUCER OFF. INDOOR BLOWER OFF WITH NORMAL DELAY. SIGNAL CIRCUIT BOARD FAILURE AT LED. INTERRUPT MAIN POWER TO RESET CONTROL.
YES
IS THERE A PROPER GROUND?
NO
LED FLASHES CODE 2 IMPROPER GROUND CONTROL WILL CONTINUE TO CALL FOR COOLING IN THIS CONDITION.
YES
IS POLARITY CORRECT?
NO
LED FLASHES CODE 1 POLARITY REVERSED CONTROL WILL CONTINUE TO CALL FOR COOLING IN THIS CONDITION.
YES
IS VOLTAGE ABOVE 70 VOLTS?
NO
LED FLASHES CODE 13 LOW VOLTAGE. CONTROL WILL CONTINUE TO CALL FOR COOLING IN THIS CONDITION.
YES
ROLLOUT SWITCH MONITORED CONTINUOUSLY. IS ROLLOUT SWITCH CLOSED?
NO
LED FLASHES CODE 8 ROLLOUT SWITCH OPEN. GAS VALVE OFF. COMBUSTION AIR INDUCER ON. INDOOR BLOWER ON. SEQUENCE HOLDS UNTIL ROLLOUT SWITCH CLOSES AND MAIN POWER IS INTERRUPTED OR THERMOSTAT IS CYCLED OFF/ON FOR 1 SEC. MINIMUM.
YES
LED: SLOW FLASH RATE REMAINS UNCHANGED THROUGHOUT COOLING CYCLE.
THERMOSTAT CALLS FOR COOLING.
COMPRESSOR CONTACTOR AND SYSTEM FAN ENERGIZED WITH 2-SECOND DELAY (COOLING SPEED). EAC TERM. ENERGIZED.
THERMOSTAT OPENS.
COMPRESSOR OFF.
SYSTEM FAN AND EAC TERM. OFF WITH 45-SECOND DELAY.
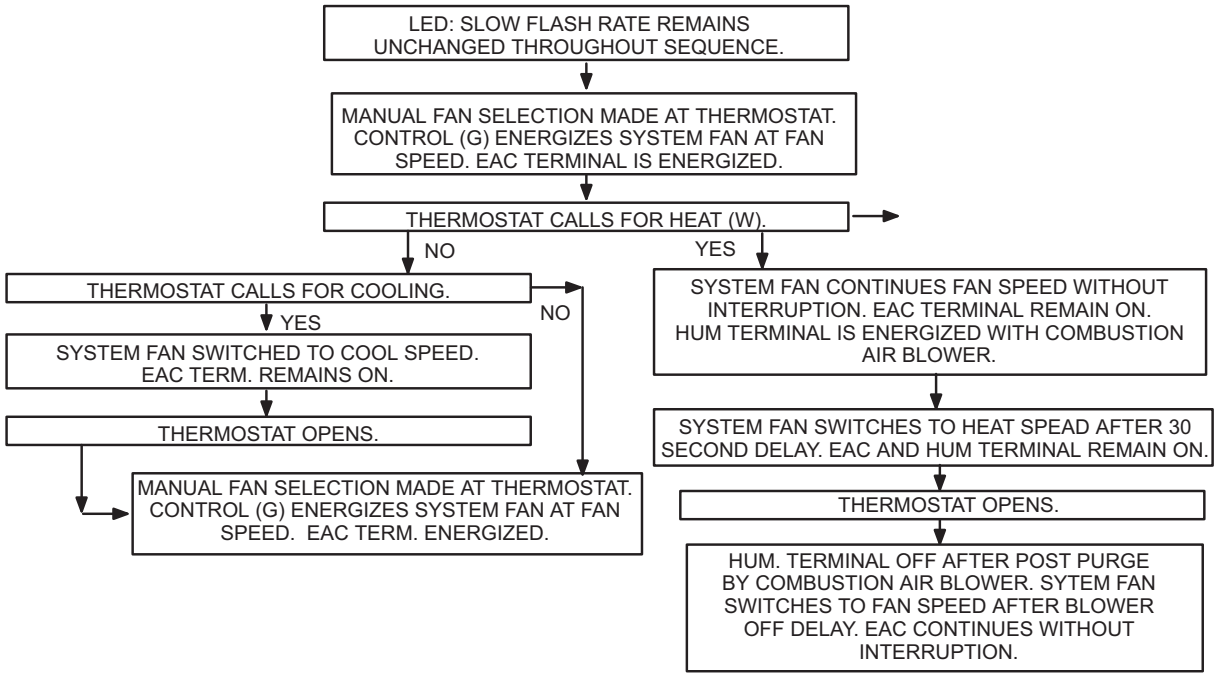
CONTINUOUS FAN SEQUENCE OF OPERATION