CUT SIZE: 6-1/4" WIDE x 10-3/8" TALL

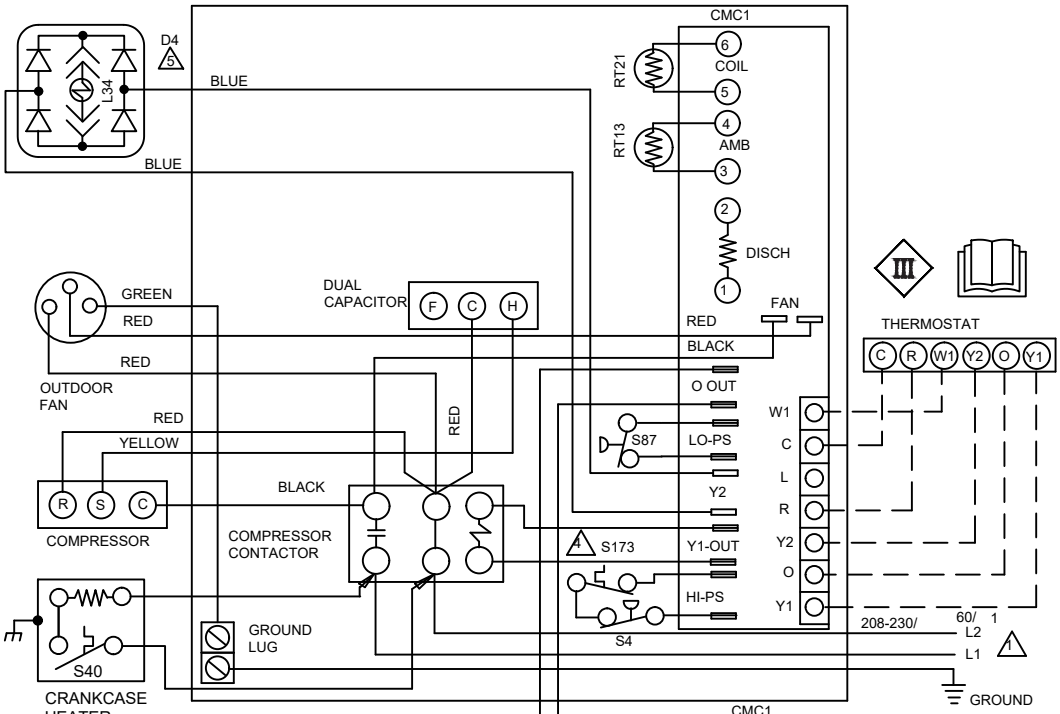

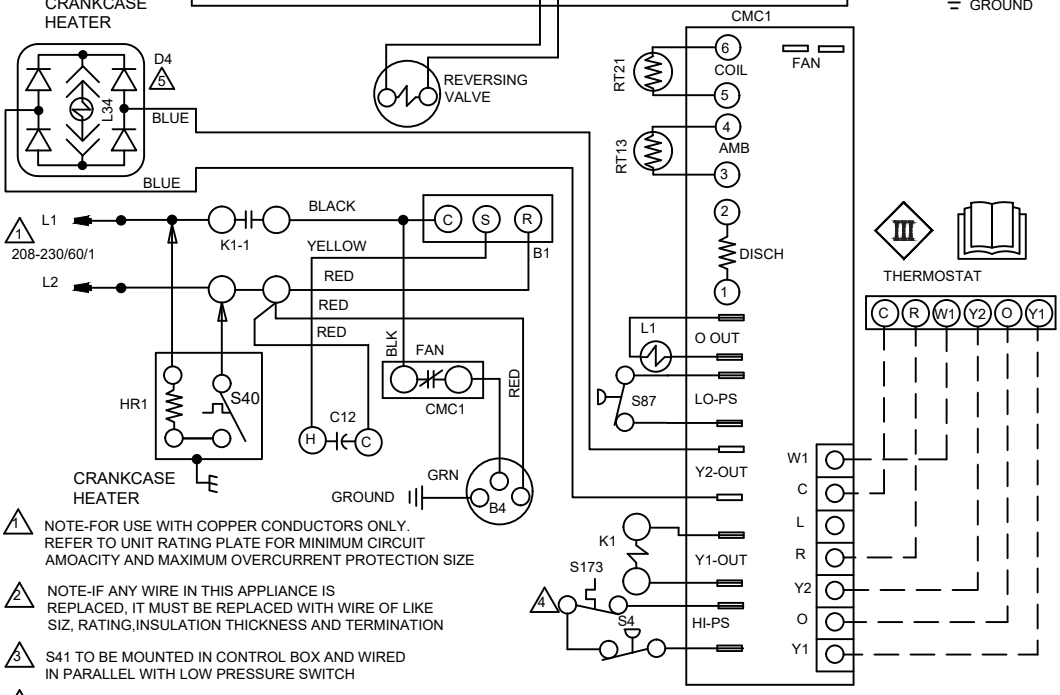

1. NOTE-FOR USE WITH COPPER CONDUCTORS ONLY. REFER TO UNIT RATING PLATE FOR MINIMUM CIRCUIT AMOACITY AND MAXIMUM OVERCURRENT PROTECTION SIZE
2. NOTE-IF ANY WIRE IN THIS APPLIANCE IS REPLACED, IT MUST BE REPLACED WITH WIRE OF LIKE SIZ, RATING,INSULATION THICKNESS AND TERMINATION
3. S41 TO BE MOUNTED IN CONTROL BOX AND WIRED IN PARALLEL WITH LOW PRESSURE SWITCH
4. S173 SWITCH USED ONLY IN UNITS EQUIPPED WITH COMPRESSORS WHICH DO NOT INCLUDE INTERNAL SWITCH
5. L34 SOLENOID IS LOCATED IN COMPRESSOR COIL IS 24VDC. DO NOT CONNECT 24VAC TO COIL TERMINALS.

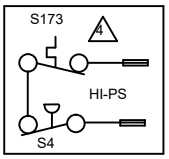

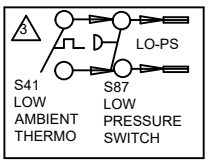

LINE VOLTAGE FIELD INSTALLED
CLASS II VOLTAGE FIELD WIRING
DENOTES OPTIONAL COMPONENTS

DESCRIPTION	
KEY	COMPONENT
B1	COMPRESSOR
B4	MOTOR-OUTDOOR FAN
C12	CAPACITOR-DUAL
CMC1	CONTROL-DEFROST
D4	DIODE BRIDGE
HR1	HEATER-COMPRESSOR
K1,-1	CONTACTOR-COMPRESSOR
L1	VALVE-REVERSING
S4	SWITCH-HIGH PRESSURE
S6	SWITCH-DEFROST
S40	TERMOSTAT-CRANKCASE
S41	THERMOSTAT-LOW AMBIENT
S87	SWITCH-LOW PRESS, COMP 1
S173	SWITCH-THERMAL PROTECTION

TWO SPEED HEAT PUMPS

Supersedes

09/25

Form No.
538640-01

© 2011

Litho U.S.A.