CUT SIZE: 5-3/4" WIDE x 10" TALL

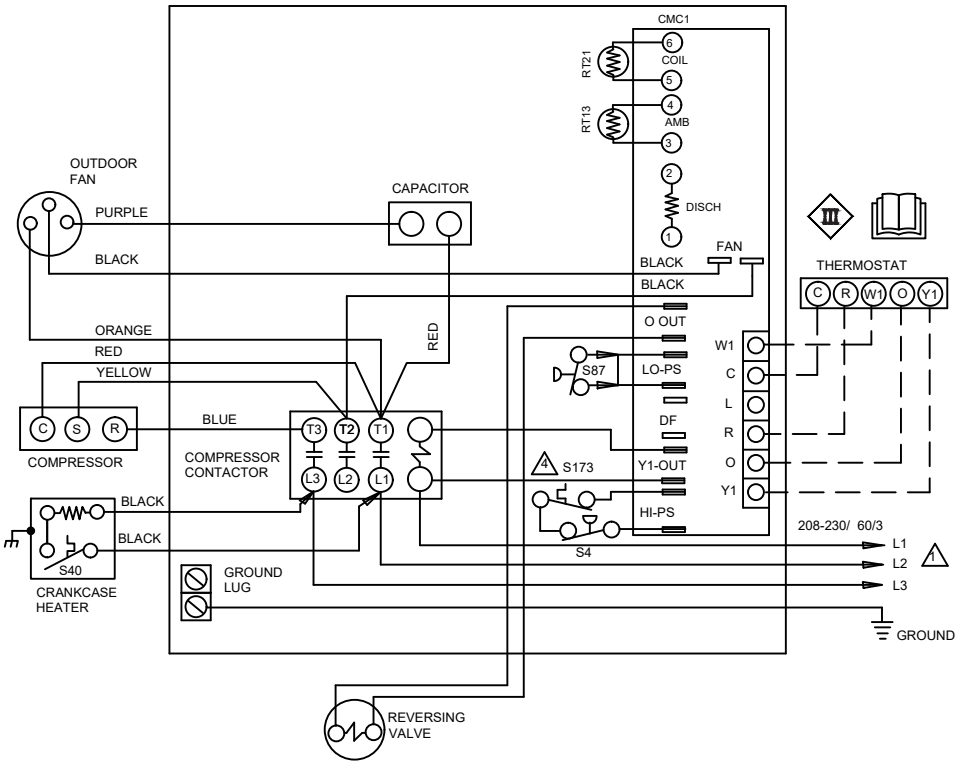

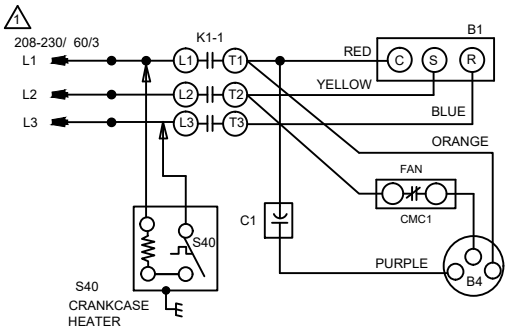

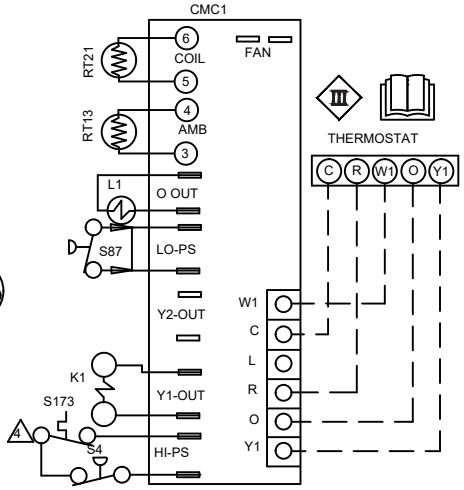

1. NOTE-FOR USE WITH COPPER CONDUCTORS ONLY. REFERTO UNIT RATING PLATE FOR MINIMUM CIRCUIT AMOACITY AND MAXIMUM OVERCURRENT PROTECTION SIZE
2. NOTE-IF ANY WIRE IN THIS APPLIANCE IS REPLACED,IT MUST BE REPLACED WITH WIRE OF LIKE SIZ,RATING,INSULATION THICKNESS AND TERMINATION
3. S41 TO BE MOUNTED IN CONTROL BOX AND WIRED IN PARALLEL WITH LOW PRESSURE SWITCH
4. S173 SWITCH USED ONLY IN UNITS EQUIPPED WITH COMPRESSORS WHICH DO NOT INCLUDE INTERNAL SWITCH

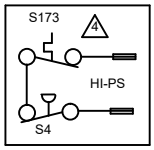

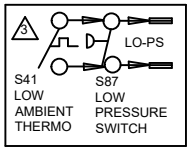

DESCRIPTION	
KEY	COMPONENT
B1	COMPRESSOR
B4	MOTOR-OUTDOOR FAN
C12	CAPACITOR-DUAL
CMC1	CONTROL-DEFROST
HR1	HEATER-COMPRESSOR
K1,-1	CONTACTOR-COMPRESSOR
K10	RELAY
L1	VALVE-REVERSING
S4	SWITCH-HIGH PRESSURE
S6	SWITCH-DEFROST
S40	TERMOSTAT-CRANKCASE
S41	THERMOSTAT-LOW AMBIENT
S87	SWITCH-LOW PRESS, COMP 1
S173	SWITCH-THERMAL PROTECTION

LINE VOLTAGE FIELD INSTALLED
CLASS II VOLTAGE FIELD WIRING
DENOTES OPTIONAL COMPONENTS

SINGLE SPEED HP

Supersedes

02/25

Form No.
538593-01

©2011

Litho U.S.A.