©2026 Lennox Industries Inc.
Dallas, Texas, USA

INSTALLATION INSTRUCTIONS

Merit® Series ML15KSPV Units

HEAT PUMP
508844-01
09/2026
Supersedes 06/2026

This manual must be left with the homeowner for future reference.

This is a safety alert symbol and should never be ignored. When you see this symbol on labels or in manuals, be alert to the potential for personal injury or death.

WARNING

Installation and servicing of air conditioning equipment can be hazardous due to internal refrigerant pressure and live electrical components. Only trained and qualified service personnel should install or service this equipment. Installation and service performed by unqualified persons can result in property damage, personal injury, or death.

WARNING

ELECTRICAL SHOCK HAZARD!

Risk of electrical shock. Disconnect all remote power supplies before installing or servicing any portion of the system. Failure to disconnect power supplies can result in property damage, personal injury, or death.

IMPORTANT

The Clean Air Act of 1990 bans the intentional venting of refrigerant (CFCs, HCFCs and HFCs) as of July 1, 1992. Approved methods of recovery, recycling or reclaiming must be followed. Fines and/or incarceration may be levied for noncompliance.

NOTICE!

Charging information is given on the charging procedure sticker on the unit access panel. For more in-depth information, consult the Installation and Service Procedures manual, available on LennoxPros.com or through the Technical Support department at 800-453-6669.

Table of Contents

Before You Begin....2
A2L Refrigerant Instructions....4
Application....8
General....9
Installation....10
Operating Range....10
Unit Dimensions....15
Refrigerant Piping....16
Electrical - Circuit Sizing and Wire Routing....27
Thermostat Control and Low Voltage Control Wiring....27
Certifications....30
Shipping and Packing List....30
Outdoor Unitary Control....31
Unit Operation....39
Start Up....39
Charging....40
Maintenance....42
Homeowner Information....43
Start-Up and Performance Checklist....45

WARNING

Sharp metal edges can cause injury. When installing the unit, use care to avoid sharp edges.

0926
508844-01

READ AND SAVE THESE INSTRUCTIONS

Before You Begin

Read these instructions carefully and completely.

- **IMPORTANT** – Save these instructions for local inspector's use.
- **IMPORTANT** – Observe all governing codes and ordinances.
- **Note to installer** – Be sure to leave these instructions with the Consumer.
- **Note to consumer** – Keep these instructions for future reference.
- **Skill level** – A licensed certified technician (to handle refrigerant R-454B, recovery, etc) and a qualified electrician are required for installation and service of this split heat pump system.
- Proper installation is the responsibility of the installer.
- Product failure due to improper installation is not covered under the limited warranty.
- For personal safety, this system must be properly grounded.
- Protective devices (fuses or circuit breakers) acceptable for installation are specified on the nameplate of each unit.
- Make sure to avoid wiring or plumbing inside the wall when installing.

⚠ CAUTION

- Use of aluminum conductors in Lennox products is forbidden.
- When the unit is in the STOP position, there is still voltage to the electrical controls.

⚠ WARNING

For your safety, the information in this manual must be followed to minimize the risk of fire, electric shock, or personal injury.

- Use this equipment only for its intended purpose as described in this manual.
- This heat pump must be properly installed in accordance with these instructions before it is used.
- All wiring should be rated for the amperage value listed on the rating plate. Use only copper wiring.
- All electrical work must be completed by a qualified electrician and completed in accordance with local and national building codes.
- Any servicing must be performed by a qualified individual.
- For any service which requires entry into the refrigerant sealed system, Federal regulations require that the work is performed by a technician having a Class II or Universal certification.
- All air conditioners contain refrigerants, which under federal law must be removed prior to product disposal. If you are getting rid of an old product with refrigerants, check with the company handling disposal.
- These R-454B heat pumps systems require that contractors and technicians use tools, equipment and safety standards approved for use with this refrigerant.

⚠ WARNING

RISK OF ELECTRIC SHOCK. Could cause injury or death.

- An adequate ground is essential before connecting the power supply.
- Disconnect all connected electric power supplies before servicing.
- Repair or replace immediately all electrical wiring that has become frayed or otherwise damaged. Do not use wiring that shows cracks or abrasion damage along its length or at either end.

0926
508844-01

READ AND SAVE THESE INSTRUCTIONS

⚠ WARNING

RISK OF FIRE. Could cause injury or death.

- Do not store or use combustible materials, gasoline or other flammable vapors or liquids in the vicinity of this or any other appliance.

⚠ WARNING

- This appliance is not intended for use by persons (including children) with reduced physical, sensory or mental capabilities, or lack of experience and knowledge, unless they have been given supervision or instruction concerning use of the appliance by a person responsible for their safety. Children should be supervised to ensure that they do not play with the appliance.
- To avoid danger of suffocation, keep the plastic bag or thin film used as the packaging material away from young children.
- Be sure not to allow foreign materials (oil, water, etc) entering the refrigerant piping. Seal the ends of refrigerant piping before storage.
- For installation purposes, be sure to use the parts supplied by the manufacturer or other prescribed parts. The use of non-prescribed parts can cause serious accidents such as the unit falling, water leakage, electric shock, or fire.
- The rated power supply of this product is 208/230 VAC/60hz/1PH. Verify the voltage is within 187~253 range before turning the equipment on.
- Supply power to the heat pump should be from a dedicated circuit that meets branch circuit ampacity requirements.
- The branch circuit protection device and conductors must conform with the current local codes and the current National Electric Code (NEC). In Canada, they must conform with the current local codes and the current Canadian Electrical Code (CEC).
- Perform wiring work in accordance with standards so that the air conditioner can be operated safely and positively.

0926
508844-01

Requirements for Operation, Service and Installation of Appliances Using A2L Refrigerants

- Do not use means to accelerate the defrosting process or to clean, other than those recommended by the manufacturer.
- The appliance shall be stored in a room without continuously operating ignition sources (for example: open flames, an operating gas appliance or an operating electric heater.
- Do not pierce or burn.
- Be aware that refrigerants may not contain an odor.

A2L

Warning; Flammable Materials, Refrigerant class per ISO 817

Owner's Manual; Operating Instructions

Read Owner's Manual

Service Indicator; Read Technical Manual

General

— **During installation, due to the extended refrigerant pipes, additional REFRIGERANT may be charged. Refer to the nameplate attached to the unit for details.**

— **Handling, installation, cleaning, servicing and disposal of refrigerant must comply with the local regulation and the instruction.**

— Servicing shall be performed only as recommended by the manufacturer.

— Spaces where refrigerant pipes are allowed shall comply with the below requirement:

- Piping material, pipe routing, and installation shall include protection from physical damage in operation and service, and be in compliance with national and local codes and standards, such as ASHRAE 15, IAPMO Uniform Mechanical Code, ICC International Mechanical Code, or CSA B52. All field joints shall be accessible for inspection prior to being covered or enclosed.
- Installation of pipe-work shall be kept to a minimum.
- Mechanical connections between parts created during installation are accessible for maintenance purposes.
- Protection devices, piping, and fittings shall be protected as far as possible against adverse environmental effects, for example, the danger of water collecting and freezing in relief pipes or the accumulation of dirt and debris.
- Piping in refrigeration systems shall be so designed and installed to minimize the likelihood of hydraulic shock damaging the system.

General (cont.)

- Precautions shall be taken to avoid excessive vibration or pulsation.
- After completion of field piping for split systems, the field pipework shall be pressure tested with an inert gas and then vacuum tested prior to refrigerant charging, according to the following requirements:
  - The minimum test pressure for the low side of the system shall be the low side design pressure and the minimum test pressure for the high side of the system shall be the high side design pressure, unless the high side of the system, cannot be isolated from the low side of the system in which case the entire system shall be pressure tested to the low side design pressure.
  - The test pressure after removal of pressure source shall be maintained for at least 1 hour with no decrease of pressure indicated by the test gauge, with test gauge resolution not exceeding 5% of the test pressure.
  - During the evacuation test, after achieving a vacuum level specified in the manual or less, the refrigeration system shall be isolated from the vacuum pump and the pressure shall not rise above 1500 microns within 10 min. The vacuum pressure level shall be specified in the manual, and shall be the lessor of 500 microns or the value required for compliance with national and local codes and standards, which may vary between residential, commercial, and industrial buildings.
- Field-made refrigerant joints indoors shall be tightness tested. The test method shall have a sensitivity of .2 oz (5 grams) per year of refrigerant or better, a pressure of at least 0.25 times the Maximum Allowable Pressure.
  - Pressure Test at 160 psig
  - Maximum Allowable Pressure at 640 psig
  - No leak shall be detected.

0926
508844-01

Requirements for Operation, Service and Installation of Appliances Using A2L Refrigerants

Qualification of Workers

Every working procedure that affects safety shall only be carried out by competent persons.

Examples for such working procedures are:

- Breaking into the refrigerating circuit;
- Opening of sealed components;
- Opening of ventilated enclosures.

The competent persons are trained by the national training organizations or manufacturers that are accredited to teach the relevant national competency standards that may be set in legislation. The achieved competence should be documented by a certificate.

Information on Servicing

Prior to beginning work on systems containing **FLAMMABLE REFRIGERANTS**, safety checks are necessary to ensure that the risk of ignition is minimized. For repair to the **REFRIGERATING SYSTEM**, the below requirement shall be completed prior to conducting work on the system:

- Work shall be undertaken under a controlled procedure so as to minimize the risk of a flammable gas or vapor being present while the work is being performed.
- All maintenance staff and others working in the local area shall be instructed on the nature of work being carried out. Work in confined spaces shall be avoided.
- The area shall be checked with an appropriate refrigerant detector prior to and during work, to ensure the technician is aware of potentially toxic or flammable atmospheres. Ensure that the leak detection equipment being used is suitable for use with all applicable refrigerants, i. e. non-sparking, adequately sealed or intrinsically safe.
- If any hot work is to be conducted on the refrigerating equipment or any associated parts, appropriate fire extinguishing equipment shall be available to hand. Have a dry powder or CO2 fire extinguisher adjacent to the charging area.
- No person carrying out work in relation to a **REFRIGERATING SYSTEM** which involves exposing any pipe work shall use any sources of ignition in such a manner that it may lead to the risk of fire or explosion. All possible ignition sources, including cigarette smoking, should be kept sufficiently far away from the site of installation, repairing, removing and disposal, during which refrigerant can possibly be released to the surrounding space. Prior to work taking place, the area around the equipment is to be surveyed to make sure that there are no flammable hazards or ignition risks. “No Smoking” signs shall be displayed.

Information on Servicing (cont.)

- Ensure that the area is in the open or that it is adequately ventilated before breaking into the system or conducting any hot work. A degree of ventilation shall continue during the period that the work is carried out. The ventilation should safely disperse any released refrigerant and preferably expel it externally into the atmosphere.
- Where electrical components are being changed, they shall be fit for the purpose and to the correct specification. At all times the manufacturer’s maintenance and service guidelines shall be followed. If in doubt, consult the manufacturer’s technical department for assistance.
- The following checks shall be applied to installations using **FLAMMABLE REFRIGERANTS**:
  - Marking to the equipment continues to be visible and legible. Markings and signs that are illegible shall be corrected;
  - Refrigerating pipe or components are installed in a position where they are unlikely to be exposed to any substance which may corrode refrigerant containing components, unless the components are constructed of materials which are inherently resistant to being corroded or are suitably protected against severe corrosion.
- Repair and maintenance to electrical components shall include initial safety checks and component inspection procedures. If a fault exists that could compromise safety, then no electrical supply shall be connected to the circuit until it is satisfactorily dealt with. If the fault cannot be corrected immediately but it is necessary to continue operation, an adequate temporary solution shall be used. This shall be reported to the owner of the equipment so all parties are advised.
- Initial safety checks shall include:
  - Capacitors are discharged: this shall be done in a safe manner to avoid possibility of sparking;
  - No live electrical components and wiring are exposed while charging, recovering or purging the system;
  - There is continuity of grounding.

Repairs to Sealed Components, Intrinsically Safe Components

- Sealed electrical components shall be replaced.
- Intrinsically safe components must be replaced.
- Replace components only with parts specified by the manufacturer. Other parts may result in the ignition of refrigerant in the atmosphere from a leak.

Requirements for Operation, Service and Installation of Appliances Using A2L Refrigerants

Cabling

- Check that cabling will not be subject to wear, corrosion, excessive pressure, vibration, sharp edges or any other adverse environmental effects. The check shall also take into account the effects of aging or continual vibration from sources such as compressors or fans. Wire routing is designed to keep electrical wiring away from refrigerant containing components. Ensure wire is returned to original routing if any are moved during inspection or repair.

Detection of Flammable Refrigerants

- Under no circumstances shall potential sources of ignition be used in the searching for or detection of refrigerant leaks. A halide torch (or any other detector using a naked flame) shall not be used.
- The following leak detection methods are deemed acceptable for all refrigerant systems:
  - Electronic leak detectors may be used to detect refrigerant leaks but, in the case of **FLAMMABLE REFRIGERANTS**, the sensitivity may not be adequate, or may need re-calibration. (Detection equipment shall be calibrated in a refrigerant-free area.) Ensure that the detector is not a potential source of ignition and is suitable for the refrigerant used. Leak detection equipment shall be set at a percentage of the LFL of the refrigerant and shall be calibrated to the refrigerant employed, and the appropriate percentage of gas (25% maximum) is confirmed.
  - Leak detection fluids are also suitable for use with most refrigerants but the use of detergents containing chlorine shall be avoided as the chlorine may react with the refrigerant and corrode the copper pipe-work.

NOTE: Examples of leak detection fluids are:

- Bubble method,
- If a leak is suspected, all naked flames shall be removed/extinguished.
- If a leakage of refrigerant is found which requires brazing, all of the refrigerant shall be recovered from the system, or isolated (by means of shut off valves) in a part of the system remote from the leak. Removal of refrigerant shall be according to the manual.

Removal and Evacuation

- When breaking into the refrigerant circuit to make repairs – or for any other purpose – conventional procedures shall be used. However, for flammable refrigerants it is important that best practice be followed, since flammability is a consideration. The following procedure shall be adhered to:
  1. Safely remove refrigerant following local and national regulations;
  2. Purge the circuit with inert gas;
  3. Open the circuit by cutting or brazing.
- The refrigerant charge shall be recovered into the correct recovery cylinders if venting is not allowed by local and national codes. For appliances containing flammable refrigerants, the system shall be purged with oxygen-free nitrogen to render the appliance safe for flammable refrigerants. This process might need to be repeated several times.
- Compressed air or oxygen shall not be used for purging refrigerant systems.
- The outlet for the vacuum pump shall not be close to any potential ignition sources, and ventilation shall be available.

Charging Procedures

- In addition to conventional charging procedures, the following requirements shall be followed.
  - Ensure that contamination of different refrigerants does not occur when using charging equipment. Hoses or lines shall be as short as possible to minimize the amount of refrigerant contained in them.
  - Cylinders shall be kept in an appropriate position according to the instructions.
  - Ensure that the **REFRIGERATING SYSTEM** is grounded prior to charging the system with refrigerant.
  - Label the system when charging is complete (if not already).
  - Extreme care shall be taken not to overfill the **REFRIGERATING SYSTEM**.
- Prior to recharging the system, it shall be pressure-tested with the appropriate purging gas. The system shall be leak-tested on completion of charging but prior to commissioning. A follow up leak test shall be carried out prior to leaving the site.

Requirements for Operation, Service and Installation of Appliances Using A2L Refrigerants

Decommissioning

- Before carrying out this procedure, it is essential that the technician is completely familiar with the equipment and all its detail. It is recommended good practice that all refrigerants are recovered safely. Prior to the task being carried out, an oil and refrigerant sample shall be taken in case analysis is required prior to re-use of recovered refrigerant. It is essential that electrical power is available before the task is commenced.

1. Become familiar with the equipment and its operation.
2. Isolate system electrically.
3. Before attempting the procedure, ensure that:
   - Mechanical handling equipment is available, if required, for handling refrigerant cylinders;
   - All personal protective equipment is available and being used correctly;
   - The recovery process is supervised at all times by a competent person;
   - Recovery equipment and cylinders conform to the appropriate standards.
4. Pump down refrigerant system, if possible.
5. If a vacuum is not possible, make a manifold so that refrigerant can be removed from various parts of the system.
6. Make sure that cylinder is situated on the scales before recovery takes place.
7. Start the recovery machine and operate in accordance with instructions.
8. Do not overfill cylinders (no more than 80% volume liquid charge).
9. Do not exceed the maximum working pressure of the cylinder, even temporarily.
10. When the cylinders have been filled correctly and the process completed, make sure that the cylinders and the equipment are removed from site promptly and all isolation valves on the equipment are closed off.
11. Recovered refrigerant shall not be charged into another **REFRIGERATING SYSTEM** unless it has been cleaned and checked.

Labeling

- Equipment shall be labeled stating that it has been decommissioned and emptied of refrigerant. The label shall be dated and signed. For appliances containing **A2L REFRIGERANTS**, ensure that there are labels on the equipment stating the equipment contains **A2L REFRIGERANT**.

Recovery

- When removing refrigerant from a system, either for servicing or decommissioning, it is recommended good practice that all refrigerants are removed safely.
- When transferring refrigerant into cylinders, ensure that only appropriate refrigerant recovery cylinders are employed. Ensure that the correct number of cylinders for holding the total system charge is available. All cylinders to be used are designated for the recovered refrigerant and labeled for that refrigerant (i. e. special cylinders for the recovery of refrigerant). Cylinders shall be complete with pressure-relief valve and associated shut-off valves in good working order. Empty recovery cylinders are evacuated and, if possible, cooled before recovery occurs.
- The recovery equipment shall be in good working order with a set of instructions concerning the equipment that is at hand and shall be suitable for the recovery of all appropriate refrigerants including, when applicable, **A2L REFRIGERANTS**. In addition, a set of calibrated weighing scales shall be available and in good working order. Hoses shall be complete with leak-free disconnect couplings and in good condition. Before using the recovery machine, check that it is in satisfactory working order, has been properly maintained and that any associated electrical components are sealed to prevent ignition in the event of a refrigerant release. Consult manufacturer if in doubt.
- The recovered refrigerant shall be returned to the refrigerant supplier in the correct recovery cylinder, and the relevant waste transfer note arranged. Do not mix refrigerants in recovery units and especially not in cylinders.
- If compressors or compressor oils are to be removed, ensure that they have been evacuated to an acceptable level to make certain that **A2L REFRIGERANT** does not remain within the lubricant. The evacuation process shall be carried out prior to returning the compressor to the suppliers. Only electric heating to the compressor body shall be employed to accelerate this process. When oil is drained from a system, it shall be carried out safely.

0926
508844-01

Application

These units are designed for use in residential and light commercial type buildings. Units should be installed with approved indoor matches listed in the Air-Conditioning, Heating and Refrigeration Institute (AHRI) Directory of Certified Products. Refer to **AHRIDirectory.org**.

NOTE: This unit is a PARTIAL UNIT HEAT PUMP, complying with PARTIAL UNIT requirements of this Standard, and must only be connected to other units that have been confirmed as complying to corresponding PARTIAL UNIT requirements of this Standard, UL 60335-2-40/CSA C22.2 No. 60335-2-40, or UL 1995/CSA C22.2 No 236.

⚠ WARNING

Assure that PARTIAL UNITS shall only be connected to an appliance suitable for the same refrigerant.

⚠ IMPORTANT

Assure the maximum operating pressure is considered when connecting to any indoor units.

⚠ IMPORTANT

According to ASHRAE 15, these units can stop compressor working in 10s when receiving the signal from the Refrigerant detection systems in indoor units. Please verify and assure the validity during installation.

NOTE: R-454B is a A2L refrigerant. The system installation must meet the following parameters based upon total refrigerant charge (line set included). TAmin (Total minimum conditioned area)is the minimum allowable conditioned area based upon the total system charge at sea level. Values must be multiplied by altitude adjustment factor at installed altitude.

Qmin table refers to minimum airflow requirements during refrigerant leak mitigation by the refrigerant detection system, based upon total system charge.

See tables on this page.

TAmin Table

Charge (lbs)	4	4.5	5	5.5	6	6.5	7	7.5	8	8.5	9	9.5	10	10.5	11
Charge (kg)	1.8	2.0	2.2	2.5	2.7	2.9	3.1	3.4	3.6	3.8	4.0	4.3	4.5	4.7	5.0
Minimum Conditioned Area (ft²)	59	67	74	82	89	97	104	112	119	127	134	142	149	157	164
Minimum Conditioned Area (m²)	5.4	6.2	6.8	7.6	8.2	9.0	9.6	10.4	11.0	11.7	12.4	13.1	13.8	14.5	15.2

NOTE – Table is based on the configuration where the discharge port and air return port in the room is higher than 2.2m.
NOTE – Multiply values in TAmin table by the Altitude Adjustment Factors to correct TAmin based on installed altitude.

Altitude Adjustment Factor

Altitude (m)	0	200	400	600	800	1000	1200	1400	1600
Altitude (ft)	0	660	1310	1970	2620	3280	3940	4590	5250
Adj. Factor	1	1	1	1	1.02	1.05	1.04	1.1	1.12
Altitude (m)	1600	1800	2000	2200	2400	2600	2800	3000	3200
Altitude (ft)	5250	5910	6560	7220	7870	8530	9190	9840	10500
Adj. Factor	1.12	1.15	1.18	1.21	1.25	1.28	1.32	1.36	1.4

Qmin Table

Refrigerant Charge lb (kg)	CFM Required	Refrigerant Charge lb (kg)	CFM Required
5 (2.268)	135	18 (8.165)	487
6 (2.722)	162	19 (8.618)	514
7 (3.175)	189	20 (9.072)	541
8 (3.629)	216	21 (9.525)	568
9 (4.082)	244	22 (9.979)	595
10 (4.536)	271	23 (10.433)	622
11 (4.990)	298	24 (10.886)	649
12 (5.443)	325	25 (11.340)	676
13 (5.897)	352	26 (11.793)	704
14 (6.350)	379	27 (12.247)	731
15 (6.804)	406	28 (12.701)	758
16 (7.257)	433	29 (13.154)	785
17 (7.711)	460	30 (13.608)	812

NOTE – Qmin minimum airfow requirement for refrigerant leak mitigation.

General

Read this entire instruction manual, as well as the instructions supplied in separate equipment, before starting the installation. Observe and follow all warnings, cautions, instructional labels, and tags. Failure to comply with these instructions could result in an unsafe condition and/or premature component failure.

These instructions are intended as a general guide only for use by qualified personnel and do not supersede any national or local codes in any way. The installation must comply with all provincial, state, and local codes as well as the National Electrical Code (U.S.) or Canadian Electrical Code (Canada). Compliance should be determined prior to installation.

This unit uses R-454B, which is an ozone-friendly HFC-HFO refrigerant. The unit must be installed with a matching indoor coil and line set. A filter drier approved for use with R-454B is installed in the unit.

Inspection of Shipment

Upon receipt of equipment, carefully inspect it for possible shipping damage. If damage is found, it should be noted on the carrier's freight bill. Take special care to examine the unit inside the carton if the carton is damaged. Any concealed damage discovered should be reported to the last carrier immediately, preferably in writing, and should include a request for inspection by the carrier's agent.

If any damages are discovered and reported to the carrier **DO NOT INSTALL THE UNIT**, as claim may be denied.

Check the unit rating plate to confirm specifications are as ordered.

Safety Precautions

Follow all safety codes. Wear safety glasses and work gloves. Use quenching cloth for brazing operations. Have fire extinguisher available. Read these instructions thoroughly and follow all warning or cautions attached to the unit.

1. Always wear proper personal protection equipment.
2. Always disconnect electrical power before removing panel or servicing equipment.
3. Keep hands and clothing away from moving parts.
4. Handle refrigerant with caution; refer to proper MSDS from refrigerant supplier.
5. Use care when lifting, avoid contact with sharp edges.

Installation

NOTE: In some cases, noise in the living area has been traced to gas pulsations from improper installation of equipment.

- Locate unit away from windows, patios, decks, etc. where unit operation sounds may disturb customer.
- Leave some slack between structure and unit to absorb vibration.
- Place a sound-absorbing material, such as Isomode, under the unit if it will be installed in a location or position that will transmit sound or vibration to the living area or adjacent buildings.
- Install the unit high enough above the ground or roof to allow adequate drainage of defrost water and prevent ice buildup.
- In heavy snow areas, do not locate the unit where drifting snow will occur. The unit base should be elevated above the depth of average snows.
- Elevation of the unit may be accomplished by constructing a frame using suitable materials. If a support frame is constructed, it must not block drain holes in unit base.
- When installed in areas where low ambient temperatures exist, locate unit so winter prevailing winds do not blow directly into outdoor coil.
- Locate unit away from overhanging roof lines which would allow water or ice to drop on, or in front of, coil or into unit.

⚠ WARNING

To prevent personal injury, as well as damage to panels, unit or structure, observe the following:

While installing or servicing this unit, carefully stow all removed panels so that the panels will not cause injury to personnel, objects or nearby structures. Also, take care to store panels where they will not be subject to damage (e.g., being bent or scratched).

While handling or stowing the panels, consider any weather conditions (especially wind) that may cause panels to be blown around and damaged.

Operating Range

The following information lists the operating range specific:

- Cooling: 40°F - 125°F (4.44 °C - 51.67 °C)
- Heating: 0°F - 75°F (-17.78 °C - 23.89 °C)

NOTES:

- When the outdoor temperature drops below -22°F (-30°C), the unit will stop running. The unit will turn back on automatically when the temperature rises above the lowest limit and the pressure returns to the closing pressure of the low-pressure switch.
- It is recommended to have a secondary heating source(s) available in case the temperature drops below the operating range.

⚠ CAUTION

- It is highly recommended that you do not open or close the stop valves when the outdoor temperature is below -5°F (-21°C) as this may cause refrigerant leakage.
- Make sure power is turned on for at least 12 hours after periods of being powered down in an 32 °F (0° C) environment or lower.
- Do not touch the fins of the coil. Touching the coil fins could result in damage to the fins or personal injury such as skin rupture.
- Ensure the power circuit capacity is adequate for all loads connected to the electrical service panel. Increase the conductor and panel capacity if the total electrical loads exceed the power source capacity.
- Contact the power utility if the power provided is below equipment rating plate requirements.
- Refer to the unit nameplate when selecting the branch circuit protection device
- Refer to the local code, the National Electric Code (NEC) and the Canadian Electrical Code (CEC) in Canada, when selecting the branch circuit conductors and protection device.
- Use refrigerant tubing that is clean and free of any contamination which may cause damage to the system including sulfur, copper oxide, dust, metal chips, powder, oil or water.
- To prevent copper oxides from forming inside the copper, flow dry nitrogen through the tubing during the brazing process.
- Do not use copper pipes that have a collapsed, deformed, or discolored portion (especially on the interior surface). Otherwise, the expansion valve or capillary tube may become blocked with contaminants.
- Improper line sizing will degrade performance. Peak pressure of R454B is much higher than R22. Use copper tubing with adequate wall thickness.
- To prevent breaking of the pipe, avoid sharp bends. Bend the pipe with a radius of curvature of 4 in. (100 mm) or more.
- If the pipe is bent repeatedly at the same place, it will break.

Required Tools for Installation

- 5/8”(16mm), 7/8”(22mm), 1”(25mm) or adjustable wrench
- R-454B refrigerant*
- Adhesive tape
- Conduit connector or clamp, 1/2in (13 mm)*
- Copper line set (for size, see **Table 3** on page 18)
- #2 Phillips screwdriver
- Drill
- Flaring tool
- Hex wrench
- Hole saw 2-1/4”
- Insulation*
- Digital Refrigerant charging scale
- Level
- Manifold gauge set
- Measuring tape
- Micron gauge
- Dry nitrogen (oxygen-free)*
- Pipe cutter (self-tightening is recommended)
- PVC pipe (optional, for condensate routing where applicable)
- Razor knife
- Reamer
- Schrader core removal tools
- Saddle clamp (L.S.) w/ screws
- Sealant, non-expanding (for lineset hole)
- Soap/water solution* or gas leakage detector
- Stud finder
- Torque wrench
- Vacuum pump
- Wire strippers
- Personal protective equipment (safety glasses, gloves)
- All usual and customary HVAC hand and power tools, meters, and testing devices
- 5/16” Female Flare to 1/4” Male Flare Adapter
- 1/4” Female Flare LH to 1/4” Male Flare Adapter for the R-454B cylinder

* consumable

Included Accessories

Outdoor Unit Included Accessories		
Name	Appearance	Quantity
Rubber Damping Pad		4
Suction Extension Pipe	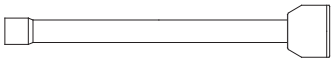	1
Liquid Extension Pipe	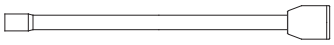	1
Installation Manual		1

⚠ IMPORTANT

Exhaust vents from dryers, water heaters and furnaces should be directed away from the outdoor unit. Prolonged exposure to exhaust gases and the chemicals contained within them may cause condensation to form on the steel cabinet and other metal components of the outdoor unit. This will diminish unit performance and longevity.

When outdoor unit is connected to factory-approved indoor unit, outdoor unit contains system refrigerant charge for operation with matching indoor unit when connected by 15 ft. (4.6 m) of field-supplied tubing. For proper unit operation, check refrigerant charge using charging information located on control box cover.

Indoor Coil TXV Selection

The outdoor section must be matched to a factory approved indoor section. It is mandatory that the installer ensure that the correct TXV is installed in the indoor section. Reference Refrigerant Piping - Typical Existing Fixed Orifice Removal Procedure. If necessary, remove the existing piston and replace it with the correct TXV. See Refrigerant Piping - Typical Existing Expansion Valve Removal Procedure for details of changing the piston or TXV. The ML15KSPV models are only rated with TXV on the indoor coil.

0926
508844-01

Outdoor Section

Zoning ordinances may govern the minimum distance the condensing unit can be installed from the property line.

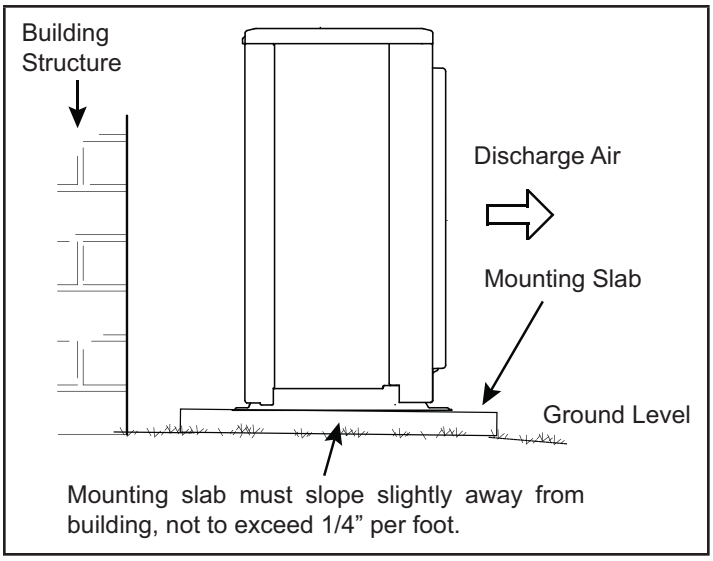

Figure 1. Slab Mounting

Install on a Solid, Level Mounting Pad

The outdoor section is to be installed on a solid foundation. This foundation should extend a minimum of 2” (inches) or 50 mm beyond the sides of the outdoor section. To reduce the possibility of noise transmission, the foundation slab should NOT be in contact with or be an integral part of the building foundation. See **Figure 1**.

If conditions or local codes require the unit be attached to pad or mounting frame, tie down bolts should be used and secured to unit base pan.

Elevate Unit

⚠ CAUTION

Accumulation of water and ice in base pan may cause equipment damage.

Elevate unit per local climate and code requirements to provide clearance above estimated snowfall level and ensure adequate drainage of unit. Use snow stand in areas where prolonged freezing temperatures are encountered.

If conditions or local codes require the unit be attached to pad or mounting frame, tie down bolts should be used and fastened through knockouts provided in unit base pan.

DO LOCATE THE UNIT:

- With required clearances on all sides and above the unit, in accordance with the applicable clearance tables and figures.
- On a solid, stable, and level mounting pad or foundation (Unit must be level within ± 1/4 in. per ft. (± 20 mm per m), per compressor manufacturer specifications).
- Where refrigerant line lengths can be kept as short as practical, but still meeting the minimum requirements.
- Where service access and electrical working clearances can be maintained.

DO NOT LOCATE THE UNIT:

- On unstable surfaces, stacked masonry, loose brick, or unbonded concrete blocks.
- Near clothes dryer exhaust vents, where lint discharge may accumulate on the outdoor coil.
- Near flue exhaust vents of any type.
- Near sleeping areas, windows, or other locations where operating sound may be objectionable.
- Under unguttered roof eaves, decks, or overhangs where water, snow, or ice can fall directly onto the unit.
- In locations that do not meet the minimum clearance requirements shown in the applicable clearance tables and figures.

Rooftop Installations

When installing the outdoor unit on a roof, comply with all applicable local codes, building codes, and roofing manufacturer requirements.

- Install the unit on a structurally sound, load-bearing portion of the roof, preferably above a load-bearing wall or structural support capable of supporting the unit weight and dynamic operating loads.
- Mount the unit on a level, load-rated mounting frame or curb, and elevate the unit a minimum of 6 in. (152 mm) above the roof surface to allow proper drainage, prevent ice or snow accumulation, and reduce the risk of water intrusion.
- Maintain all required airflow, service, and electrical clearances as specified in the applicable clearance tables and figures.
- Locate the unit to minimize exposure to prevailing winter winds. If the unit cannot be installed away from prevailing winds, a wind barrier may be installed, provided it does not restrict airflow or service access. The size and location of any wind barrier shall be determined by the installer based on site conditions and manufacturer clearance requirements.
- Ensure that roof penetrations are properly sealed and flashed in accordance with roofing manufacturer recommendations and local codes.

0926
508844-01

Clearance Requirements

When installing, allow sufficient space for airflow clearance, wiring, refrigerant piping, and service. For proper airflow, quiet operation and maximum efficiency. Position so water, snow, or ice from roof or eaves cannot fall directly on unit. Refer to **Table 1** below for installation clearances.

Table 1. Single-Unit Clearances

	Minimum Clearance					
Location	**A**	**B**	**C**	**D**	**E**	**F**
Service	24” (610 mm)					
Front	14" (360 mm)	Open	14" (360 mm)	Open	20” (510 mm)	Open
Back	Open	4" (110 mm)	Open	4" (110 mm)	4" (110 mm)	4" (110 mm)
Side	Open	Open	Open	12" (310 mm)	Open	Open
Top	Open	Open	40" (1020 mm)	20" (510 mm)	Open	20" (510 mm)

NOTE: At least one side should be unobstructed by a wall or other barrier. Barriers on at least one side of the front and back shall be lower than the outdoor unit.

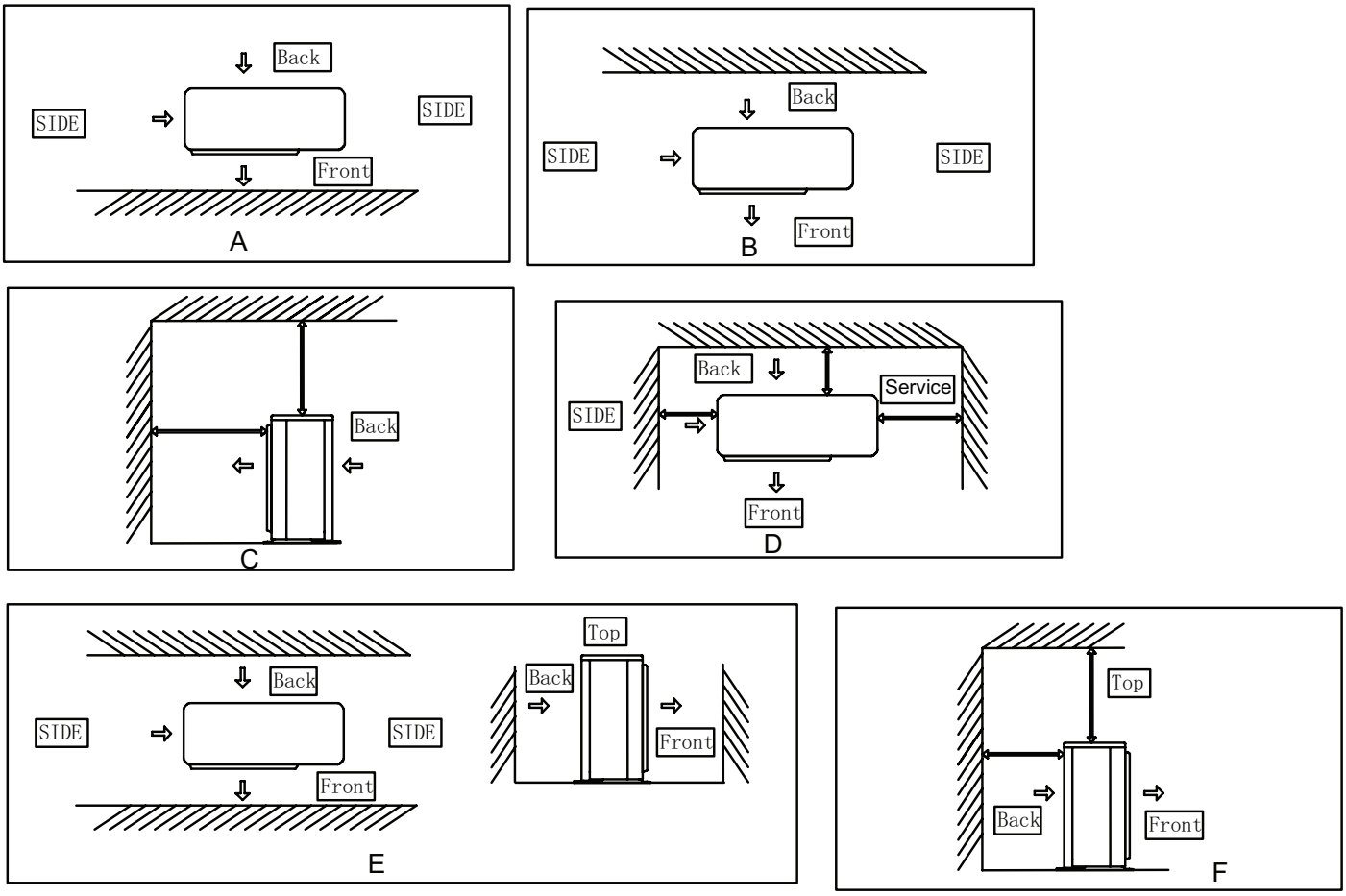

Figure 2. Single-Unit Clearance Configurations

0926
508844-01

Table 2. Multiple-Unit Clearances

Location	G	H	I	J
Service	24” (610 mm)			
Front	Open	Open	20” (510 mm)	as shown in the figure
Back	4” (110 mm)	8” (200 mm)	8” (200 mm)	as shown in the figure
Side	as shown in the figure	12” (310 mm)	Open	12” (310 mm)
Top	Open	Open	Open	Open

NOTE: At least one side should be unobstructed by a wall or other barrier. Barriers on at least one side of the front and back shall be lower than the outdoor unit.

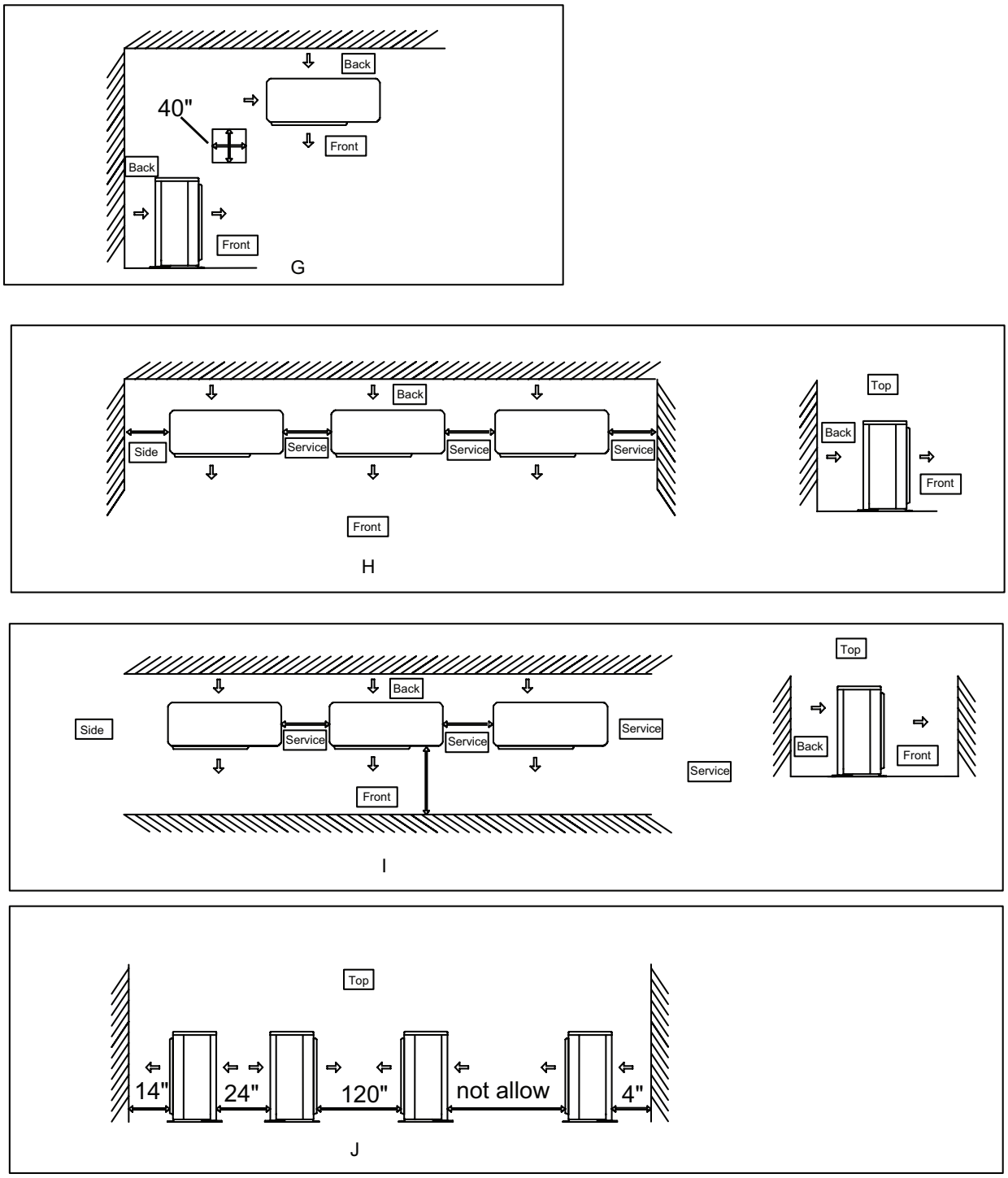

Figure 3. Multiple-Unit Clearance Configurations

0926
508844-01

Unit Dimensions

Model	18k	24k	30k	36k	42k	48k	60k
L1	39" (990 mm)	39" (990 mm)	40-3/16" (1020 mm)	40-3/16" (1020 mm)	43-1/8" (1100 mm)	43-1/8" (1100 mm)	43-1/8" (1100 mm)
L2	35-1/16" (890 mm)	35-1/16" (890 mm)	36 1/ 4" (920 mm)	36 1/ 4" (920 mm)	41-3/8" (1050 mm)	41-3/8" (1050 mm)	41-3/8" (1050 mm)
D2	13-3/8" (340 mm)	13-3/8" (340 mm)	14-5/8" (370 mm)	14-5/8" (370 mm)	15-3/4" (400 mm)	15-3/4" (400 mm)	15-3/4" (400 mm)
D1	16-1/8" (410 mm)	16-1/8" (410 mm)	17-1/8" (440 mm)	17-1/8" (440 mm)	19-7/8" (510 mm)	19-7/8" (510 mm)	19-7/8" (510 mm)
H	27-9/16" (700 mm)	27-9/16" (700 mm)	30-1/8" (770 mm)	30-1/8" (770 mm)	33-1/16" (840 mm)	33-1/16" (840 mm)	33-1/16" (840 mm)
X1	24-7/8" (630 mm)	24-7/8" (630 mm)	26" (660 mm)	26" (660 mm)	26-9/16" (680 mm)	26-9/16" (680 mm)	26-9/16" (680 mm)
X2	14-1/2" (370 mm)	14-1/2" (370 mm)	15-13/16" (400 mm)	15-13/16" (400 mm)	18-1/8" (460 mm)	18-1/8" (460 mm)	18-1/8" (460 mm)
Weight (Ship)	145.5 lbs (66 kg)	145.5 lbs (66 kg)	176.4 lbs (80 kg)	176.4 lbs (80 kg)	224.9 lbs (102 kg)	224.9 lbs (102 kg)	255.7 lbs (116 kg)
Weight (Net)	112.4 lbs (51 kg)	112.4 lbs (51 kg)	136.7 lbs (62 kg)	136.7 lbs (62 kg)	178.6 lbs (81 kg)	178.6 lbs (81 kg)	209.4 lbs (95 kg)

18K/24K/30K/36K Units

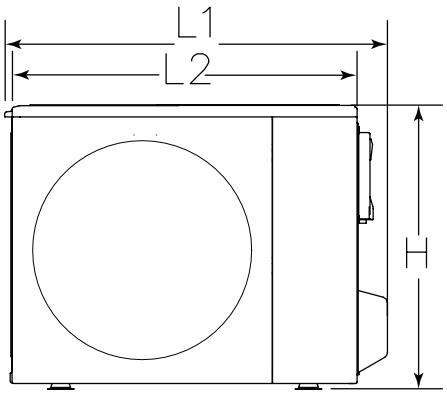

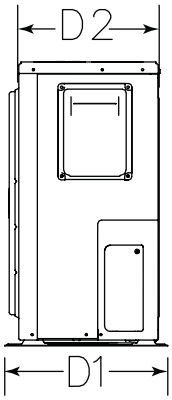

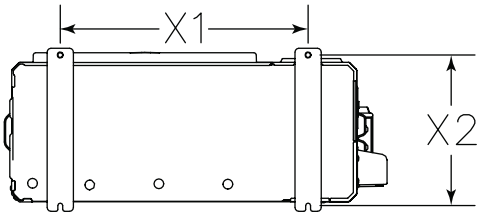

42K/48K/60K Units

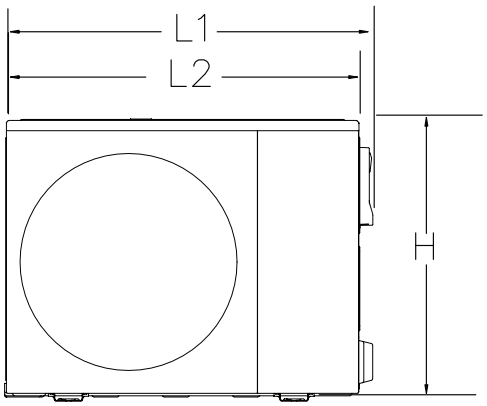

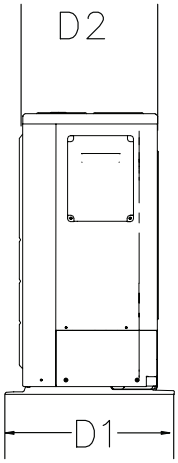

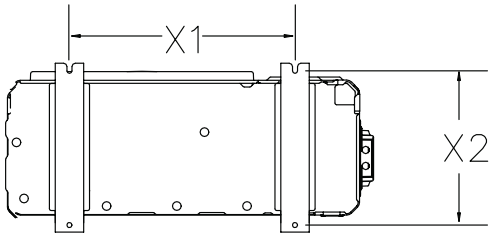

0926
508844-01

Refrigerant Piping

- Use only refrigerant grade copper tubes.
- **Table 3** shows the pipe installation restrictions for split systems
- Ensure that vapor and liquid tube diameters are appropriate to capacity of unit.
- Run refrigerant tubes as directly as possible by avoiding unnecessary turns and bends.
- When passing refrigerant tubes through the wall, seal opening with RTV or other silicon-based caulk.
- Avoid direct tubing contact with water pipes, duct work, floor joists, wall studs, floors, walls, and any structure.
- Do not suspend refrigerant tubing from joists and studs with a rigid wire or strap that comes in direct contact with tubing.
- Ensure that tubing insulation is pliable and completely surrounds vapor tube.

It is important that no tubing be cut or seals broken until you are ready to actually make connections to the evaporator and to the condenser section. DO NOT remove rubber plugs or copper caps from the tube ends until ready to make connections at evaporator and condenser. Under no circumstances leave the lines open to the atmosphere for any period of time, if so unit requires additional evacuation to remove moisture.

Be extra careful with sharp bends. Tubing can “kink” very easily, and if this occurs, the entire tube length will have to be replaced. Extra care at this time will eliminate future service problems.

It is recommended that vertical suction risers not be up-sized. Proper oil return to the compressor should be maintained with suction gas velocity.

Filter Drier

The factory-installed filter dryer is very important for system reliability. The filter dryer should be replaced before re-charging the unit with refrigerant if the unit needs to have refrigerant evacuated for repair. The specification of the filter dryer can be found in the table below.

ODF	Temperature Range	MWP	Compatible Refrigerant
3/8 in.	−40°F to + 248°F	650 psig	R-454B
9.52 mm	−40°C to + 120°C	4.5 MPa	R-454B

Installation of Line Sets

DO NOT fasten liquid or suction lines in direct contact with the floor or ceiling joist. Use an insulated or suspension type of hanger. Keep both lines separate, and always insulate the suction line. Liquid line runs (30 feet (9.14 m) or more) in an attic will require insulation. Route refrigeration line sets to minimize length.

DO NOT let refrigerant lines come in direct contact with foundation. When running refrigerant lines through the foundation or wall, openings should allow for a sound and vibration absorbing material to be placed or installed between tubing and foundation. Any gap between foundation or wall and refrigerant lines should be filled with a vibration damping material.

⚠ CAUTION

If ANY refrigerant tubing is required to be buried by state or local codes, provide a 6 inch vertical rise at service valve.

⚠ WARNING

Polyolester (POE) oils used with HFC-454B refrigerant absorb moisture very quickly. It is very important that the refrigerant system be kept closed as much as possible. DO NOT remove line set caps or service valve stub caps until you are ready to make connections.

⚠ IMPORTANT

If this unit is being matched with an approved line set or indoor unit coil that was previously charged with mineral oil, or if it is being matched with a coil which was manufactured before January of 1999, the coil and line set must be flushed prior to installation. Take care to empty all existing traps. Polyolester (POE) oils are used in these variable-capacity units charged with HFC-454B refrigerant. Residual mineral oil can act as an insulator, preventing proper heat transfer. It can also clog the expansion device and reduce system performance and capacity. Failure to properly flush the system per this instruction and the detailed Installation and Service Procedures manual will void the warranty.

NOTICE!

"Clean refrigerant" is any refrigerant in a system that has not had compressor burnout. If the system has experienced burnout, it is recommended that the existing line set and indoor coil be replaced.

Line Set Joints – Furnace Application

Evaporator primary line set joints in all applications shall have a line set joint sleeve.

Evaporator primary line sets should not have additional joints not covered by line set joint sleeve.

If additional joints are present, the system installation shall comply with one of the options below:

Option 1 - Furnace is installed as a direct vent appliance;

Option 2 - Furnace/Evaporator installation is in a space greater than the minimum conditioned area (Amin);

Option 3 - Furnace/Evaporator installation is connected to a space greater than the minimum conditioned area (Amin) through an opening of at least 15 in² (4-inch diameter hole equivalent) located below the level of the furnace burners;

Option 4 - Have a second refrigerant detection sensor installed below the level of the burners (see Secondary Sensor Installation section).

Multiple Systems Installed in Same Space

For any A2L refrigerant system with additional joints not covered by line set joint sleeves, each system in the same space must have refrigerant detection sensor installed below the level of the burners (see Secondary Sensor Installation section). If all the systems in the same space are installed with direct vent application, then additional refrigerant detection sensor is not needed

Secondary Sensor Installation

If secondary refrigerant sensor is required, it shall be mounted as follows:

Upflow Applications: Mounted on an unused side furnace return air connection at least 9 inches above the floor and within 9 inches from front of furnace.

Downflow Applications: Mounted on one side of the evaporator coil 9 inches above the floor and within 9 inches from front of coil.

Horizontal Applications: Mounted on the bottom side return furnace air connection within 9 inches of both the blower deck and front of furnace.

Connect the refrigerant sensor to the second sensor input on the RDS Control. Refer to the instructions provided with the sensor or the RDS controller to enable the second sensor.

Heat Pump System (HFC454B)

- See Table 3 and Table 4 for refrigerant line length limitations.

Flush Line Sets

Flush the existing line set per the following instructions. For more information, refer to the Installation and Service Procedures manual.

⚠ CAUTION

Do NOT attempt to flush and re-use existing line sets or indoor coil when the system contains contaminants (i.e., compressor burn out).

Suction Traps

For systems with the outdoor unit 5 - 60 feet (1.52 - 18.29 m) above the indoor unit, one trap must be installed at the bottom of the suction riser.

NOTE: Special consideration must be taken for line sets over 50 feet (15.24 m). See Refrigerant Piping Guidelines.

Table 3. Refrigerant Charge and Pipe Length Information

Model	Refrig. Charge*	For Liquid Line Length	System Max Pipe Length	Max Vertical Length	Service Valve Connection Sizes		Refrigerant Line Sizes	
					Suction Line Connection (in)	Liquid Line Connection (in)	Suction Line (in)	Liquid Line (in)
18K	3 lbs. 4 oz. (1 kg 470 g)	0.55 oz /ft (0.051 g/mm)	150 ft (45.72 m)	50 ft 15.24 m	5/8”	3/8”	3/4"	3/8”
24K	3 lbs. 11.6 oz. (1 kg 690 g)							
30K	4 lbs. 8.3 oz. (2 kg 50 g)							
36K	4 lbs. 8.3 oz. (2 kg 50 g)							
42K	6 lbs. 11.4 oz. (3 kg 40 g)		100 ft (30.48m)		3/4”		7/8"	
48K	7 lbs. 5.5 oz. (3 kg 330 g)							
60K	8 lbs. 1.1 oz. (3 kg 660 g)							

*Factory charged for 15 feet of line set; adjust per installation instructions.

Table 4. Line Set Guidelines

Model	Maximum Total Equivalent Length	Maximum Linear (actual) Length	Maximum Vapor Riser	Maximum Linear Liquid Lift	Preferred Vapor Line Sizes for Horizontal Runs	Required Vapor Riser Size
18K / 24K	180 ft (54.86 m)	150 ft (45.72 m)	50 ft (15.24 m)	50 ft (15.24 m)	3/4"	5/8"
30K						
36K						
42K / 48K	120 ft (36.57 m)	100 ft (30.48 m)	50 ft (15.24 m)		7/8"	3/4"
60K						7/8"

Table 5. Liquid Line Diameter Selection

Tonnage	Line SIze	Total Linear Length						Max Elevation (ft)
		25 ft (7.62 m)	50 ft (15.24 m)	75 ft (22.86 m)	100 ft (30.48 m)	125 ft (38.1 m)	150 ft (45.72 m)	
18K / 24K	3/8”	25 ft (7.62 m)	50 ft (15.24 m)	50 ft (15.24 m)	50 ft (15.24 m)	50 ft (15.24 m)	50 ft (15.24 m)	
30K / 36K								
42K / 48K / 60K						- - -	- - -	

A. Find your tonnage on the left side of the table.

B. Select the actual Total Linear Length of your system shown at the top of the table.

C. The elevation listed in the table is the maximum allowed for the liquid line listed.

NOTE: Total linear length refers to actual tubing length and does not include fitting equivalent length.

0926
508844-01

Conventional Line Set Installation: Pipe Bending

1. Use a tubing bender to change pipe direction.
2. If tubing is coiled, extend it by unwinding it from one end.
3. DO NOT bend the pipe excessively.

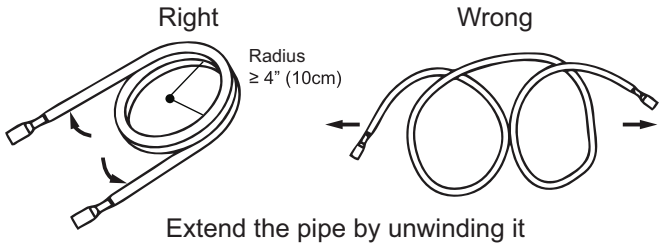

Figure 4. Minimum Bend Radius

4. Use a sharp cutter to cut the pipe insulation as shown, and bend the pipe after it is exposed. After bending, place the insulation back on the pipe and secure it with adhesive tape.

NOTE: Tubing extension is included with the unit.

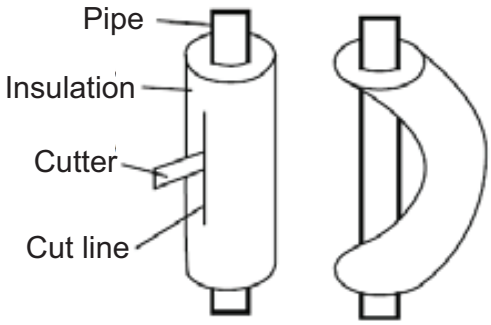

Figure 5. Pipe Insulation

Step 1: Cutting

1. When preparing refrigerant pipes, take your time to cut and flare them properly. This will ensure efficient operation and minimize the need for future repairs and loss of comfort.
2. Measure and record the distance between the indoor and outdoor units.
3. Make sure that the pipe is cut at a perfect 90° angle. Refer to the image below for guidance.

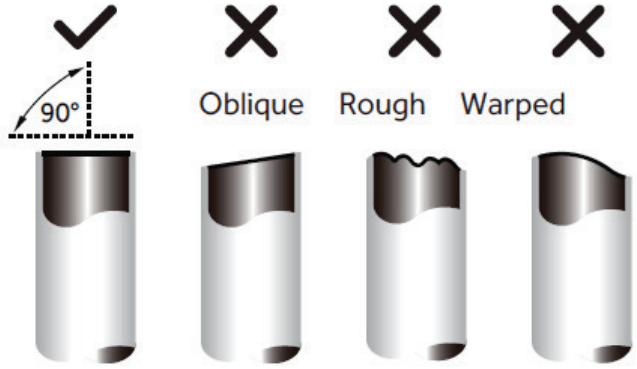

Figure 6. Appropriate Cutting Angle

NOTE: Be extra careful not to damage, dent, or deform the pipe while cutting. This will drastically reduce the operating efficiency of the unit.

Step 2: Deburring

Burrs will affect the air-tight seal of the refrigerant piping connection. They must be completely removed.

1. Hold the pipe at a downward angle to prevent burrs from falling into the pipe.
2. Using a reamer or deburring tool, remove all inside and outside burrs from the cut section of the pipe.
3. After cutting and deburring, never allow tubing to be exposed to the atmosphere. Tightly seal cut ends with PVC tape.

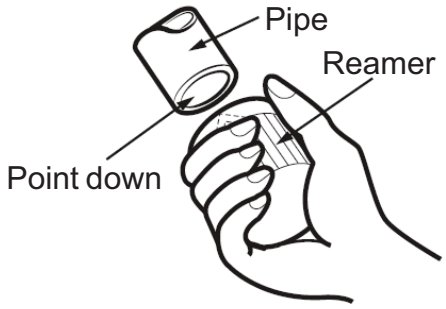

Figure 7. Appropriate Reamer Positioning

0926
508844-01

Conventional Line Set Installation: Pipe Cutting / Pipe Flaring

NOTE: Flaring step is only necessary if the piping extensions included with the heat pump cannot be used.

Step 3: Flaring

Proper flaring is essential to achieve an airtight seal.

1. Ensure there is enough insulation to protect the entire line set from end to end.
2. Use the flare nuts from the accessories pouch, located in the indoor unit packaging. Fit the nut on the tubing to be flared.

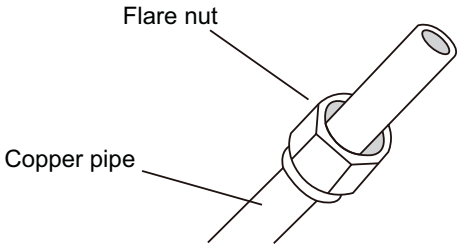

Figure 8. Flare Nut Placement

3. Remove the seal over the exposed end, and place the tube into the R-454B flaring tool.

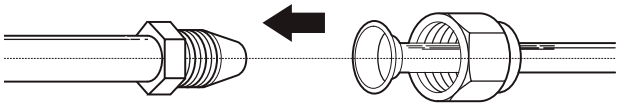

Figure 9. Flaring Tool

4. Run the tube against the flaring tool pipe stop, and clamp the form on the tube.

Step 3: Flaring (cont.)

5. Rotate the handle of the die clockwise until the clutch releases, then remove the flared tubing from the form.

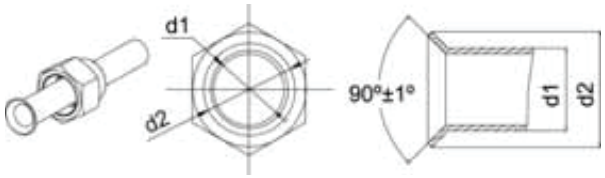

Figure 10. Flare Nut Diameter

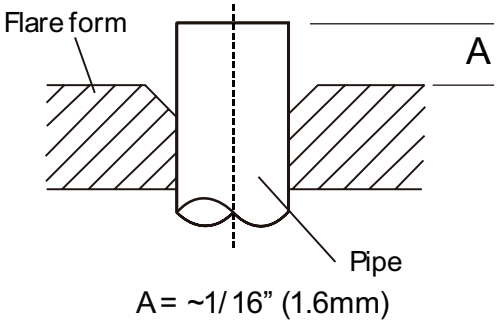

Figure 11. Flare Form

6. Examine the flare to make sure there are no imperfections on the lip of the flare, and that the back of the flare exactly fits the seat of the flare nut.

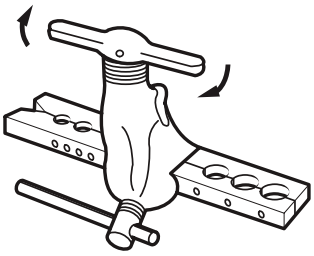

Figure 12. Flare Rotation

0926
508844-01

Conventional Line Set Installation: Pipe Connection

- Attach the flare nuts to the outdoor Service Valve, Torque the fittings according to the specifications shown in the torque chart below.

NOTE: Forced fastening without careful centering may damage the threads and cause a refrigerant leak.

Pipe Diameter(ø)	Fastening torque
Liquid side 6.35mm (1/4”)	18N.m / 13.3Ft.lbs
Liquid side 9.52mm (3/8”)	42 N.m / 30.1Ft.lbs
Gas side 12.7mm (1/2”)	55N.m / 40.6Ft.lbs
Gas side 15.88mm (5/8”)	60 N.m / 44.3Ft.lbs
Gas side 19.05mm (3/4”)	100N.m / 73.8Ft.lbs

- Add additional refrigerant charge if needed before you open outdoor service valves
- Record the amount of refrigerant added in permanent ink at the line set length location entered earlier.
- Two wrenches are required to join the flare connection; one standard wrench and one torque wrench adjusted to the proper settings.
- Repeat the process for attaching the other end of the line set.

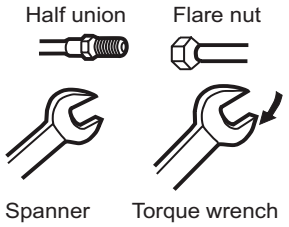

Figure 13. Appropriate Tool Usage

Pipe Matching Capabilities of Pipe Extensions

Model	Extension	Extension Type	Extension Length (in)	Line Set Receiving End Pipe Diameter (in)	Flared End Pipe Diameter (in)	Line Set Connection Type
18K/24K	Suction Extension	Rigid	7-3/4”	3/4”	5/8”	Braze and Mechanical
	Liquid Extension			3/8”	3/8”	Braze and Mechanical
30K/36K	Suction Extension	Rigid		3/4”	5/8”	Braze and Mechanical
					3/4”	Braze
	Liquid Extension			3/8”	3/8”	Braze and Mechanical
42K/48K/60K	Suction Extension	Rigid		3/4”	3/4”	Braze and Mechanical
				7/8”	3/4”	Braze
	Liquid Extension			3/8”	3/8”	Braze and Mechanical

IMPORTANT: A 5/16” female by 1/4” male adapter will be required to connect conventional gauge hoses to the service valves.

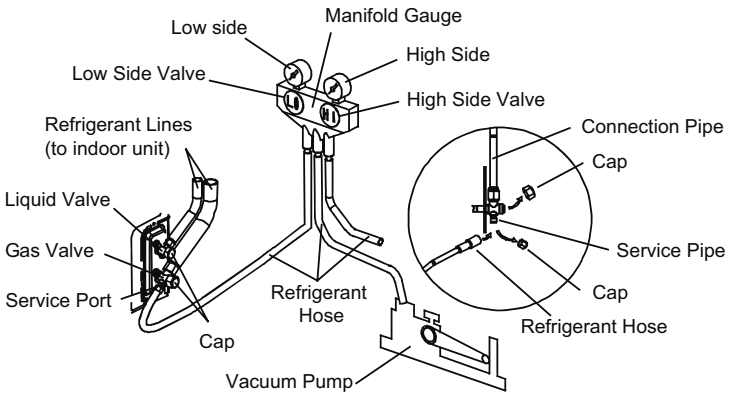

Figure 14. Gauge Connections

NOTE: It shows the gauge connection will need to have the high side gauge hose connected to the high side liquid valve so both lines can be evacuated and leak checked.

0926
508844-01

Connect Gauges and Equipment for Flushing Procedure

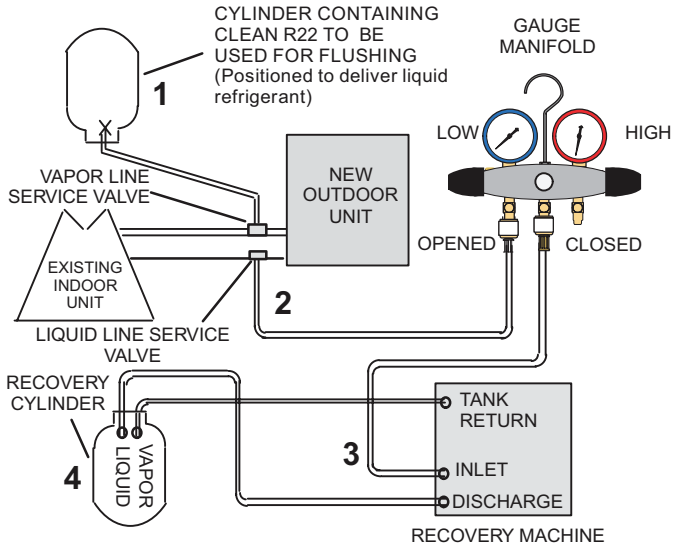

Figure 15. Connecting Gauges

1. Cylinder with clean R22 (positioned to deliver liquid refrigerant) to the vapor service valve.
2. Refrigerant gauge set (low side) to the liquid line valve.
3. Refrigerant gauge set center port to inlet on the recovery machine with an empty recovery tank connected to the gauge set.
4. Connect recovery tank to recovery machine per machine instructions.

Flushing Line Sets

If the unit will be installed in an existing system that uses an indoor unit or line sets charged with R-22 refrigerant, installer must perform the following flushing procedure.

NOTE: Existing system components (including line set and indoor coil) must be an AHRI match with the unit in order to fulfill unit warranty requirements.

⚠ WARNING

Fire, Explosion and Personal Safety hazard. Failure to follow this warning could result in damage, personal injury or death.

Never use oxygen to pressurize or purge refrigeration lines. Oxygen, when exposed to a spark or open flame, can cause fire and/or an explosion, that could result in property damage, personal injury or death.

⚠ WARNING

When using a high pressure gas such as nitrogen to pressurize a refrigeration or air conditioning system, use a regulator that can control the pressure down to 1 or 2 psig (6.9 to 13.8 kPa).

⚠ WARNING

Refrigerant must be reclaimed in accordance with national and local codes.

1. Set the recovery machine for liquid recovery and start the recovery machine. Open the gauge set valves to allow the recovery machine to pull a vacuum on the existing system line set and indoor unit coil.
2. Position the cylinder of clean R22 for delivery of liquid refrigerant and open its valve to allow liquid refrigerant to flow into the system through the vapor line valve. Allow the refrigerant to pass from the cylinder and through the line set and the indoor unit coil before it enters the recovery machine.
3. After all of the liquid refrigerant has been recovered, switch the recovery machine to vapor recovery so that all of the R22 vapor is recovered. Allow the recovery machine to pull the system down to 0.
4. Close the valve on the inverted R22 drum and the gauge set valves. Pump the remaining refrigerant out of the recovery machine and turn the machine off.

0926
508844-01

Refrigerant Piping - Brazing Procedures

1. CUT AND DEBURR

Cut ends of the refrigerant lines square (free from nicks or dents) and deburr the ends. The pipe must remain round. Do not crimp end of the line.

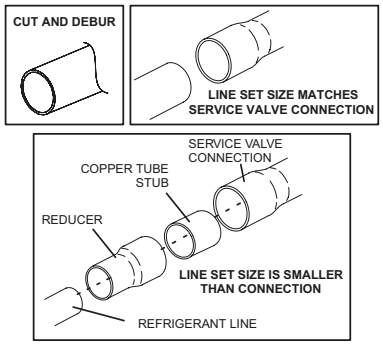

DO NOT CRIMP SERVICE VALVE CONNECTOR WHEN PIPE IS SMALLER THAN CONNECTION

2. CAP AND CORE REMOVAL

Remove service cap and core from both the vapor and liquid line service ports.

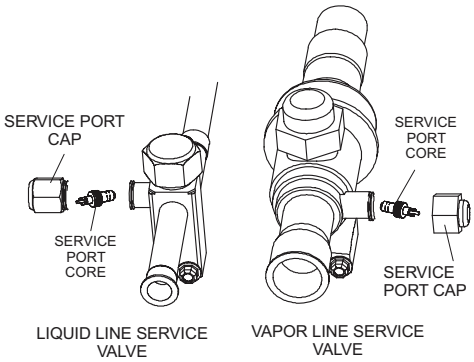

3. ATTACH THE MANIFOLD GAUGE SET FOR BRAZING LIQUID AND VAPOR LINE SERVICE VALVES

Flow regulated nitrogen (at 1 - 2 psig or 6.9 - 13.8 kpa) through the low-side refrigeration gauge set into the liquid line service port valve, and out of the vapor line service port valve.

A. Connect gauge set low pressure side to liquid line service valve (service port).

B. Connect gauge set center port to bottle of nitrogen with regulator.

C. Remove core from valve in vapor line service port to allow nitrogen to escape.

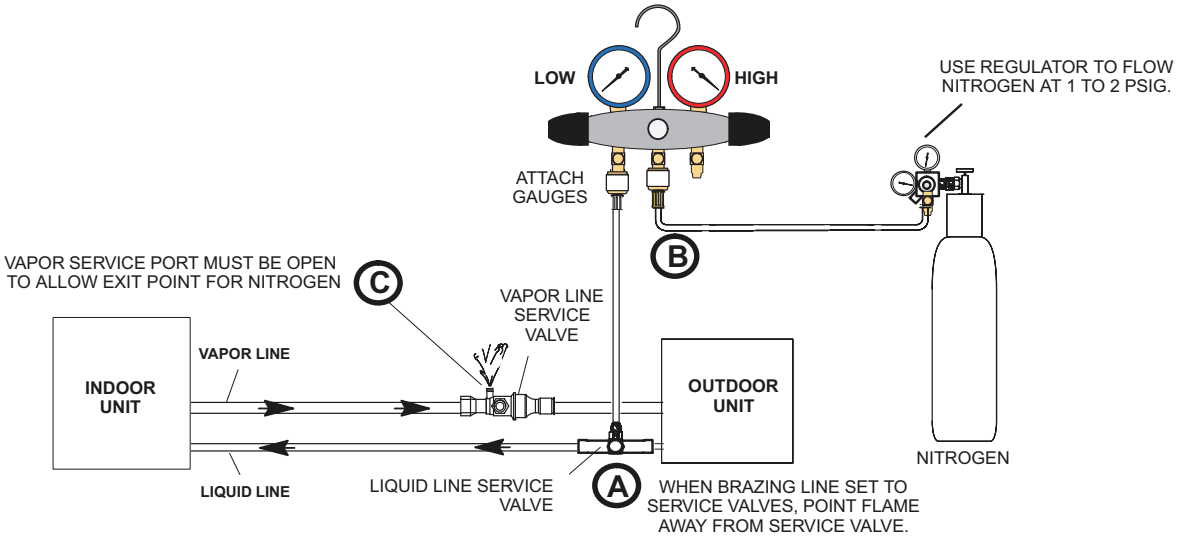

NOTICE!

Use a manifold gauge set designed for use on R-454B refrigerant systems.

⚠ WARNING

Before brazing, ensure the system is fully recovered of all refrigerant. Application of a brazing torch to a pressurized system may result in ignition of the refrigerant and oil mixture. Check the high and low pressures before applying heat.

⚠ WARNING

Brazing alloys and flux contain materials which are hazardous to your health.

Avoid breathing vapors or fumes from brazing operations. Perform operations only in well-ventilated areas.

Wear gloves and protective goggles or face shield to protect against burns.

Wash hands with soap and water after handling brazing alloys and flux.

0926
508844-01

Refrigerant Piping - Brazing Procedures (cont.)

4. WRAP SERVICE VALVES

To help protect service valve seals during brazing, wrap water-saturated cloths around service valve bodies and copper tube stubs. Use additional water-saturated cloths underneath the valve body to protect the base paint.

5. TEST FOR LEAKS

Flow regulated nitrogen (at 1 - 2 psig or 6.9 - 13.8 kpa) through the refrigeration gauge set into the valve stem port connection on the liquid service valve and out of the vapor valve stem port. See steps 3A, 3B and 3C on manifold gauge set connections.

6. BRAZE LINE SET

Wrap both service valves with water-saturated cloths as illustrated here and as mentioned in step 4, before brazing to line set. Cloths must remain water-saturated throughout the brazing and cool-down process.

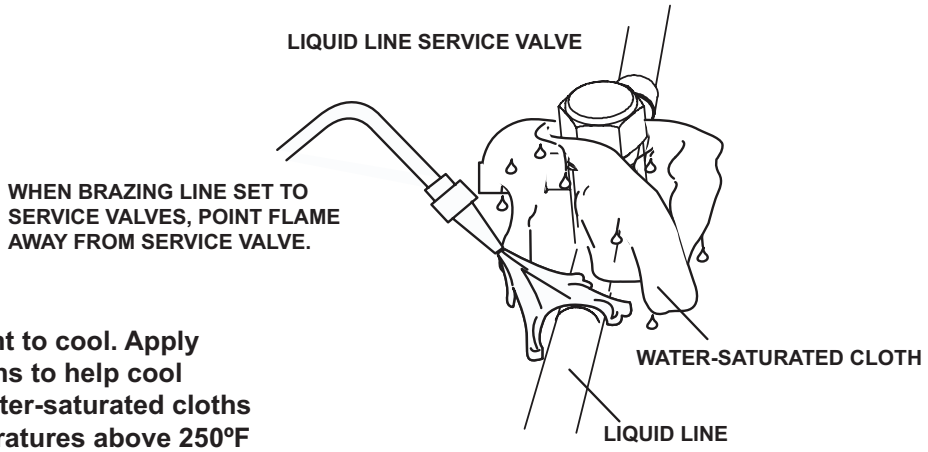

IMPORTANT — Allow braze joint to cool. Apply additional water-saturated cloths to help cool brazed joint. Do not remove water-saturated cloths until piping has cooled. Temperatures above 250ºF will damage valve seals.

⚠WARNING

FIRE, PERSONAL INJURY, OR PROPERTY DAMAGE may result if you do not wrap a water-saturated cloth around both liquid and suction line service valve bodies and copper tube stub while brazing the line set! The braze, when complete, must be quenched with water to absorb any residual heat.

Do not open service valves until refrigerant lines and indoor coil have been leak-tested and evacuated. Refer to the Leak Test and Evacuation section of this manual.

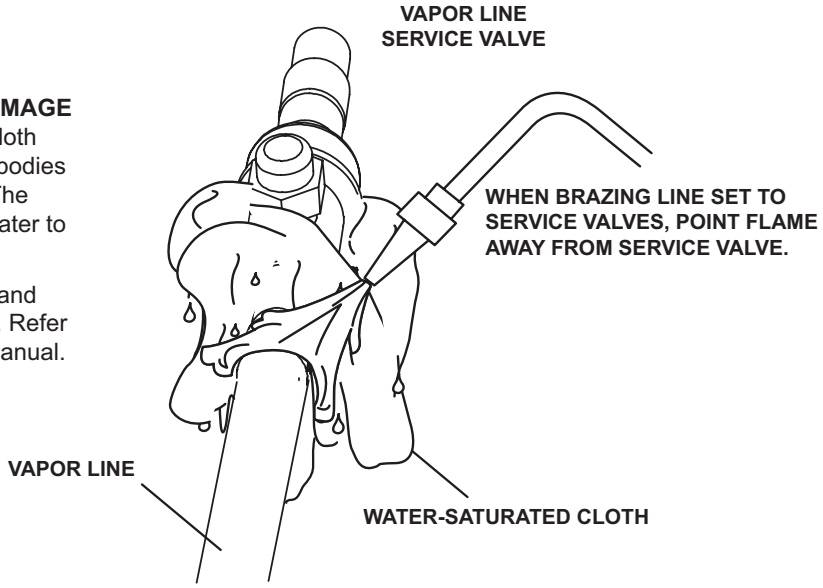

7. PREPARATION FOR NEXT STEP

After all connections have been brazed, disconnect manifold gauge set from service ports. Apply additional water-saturated cloths to both services valves to cool piping. Once piping is cool, remove all water-saturated cloths.

0926
508844-01

Leak Test and Evacuation

LEAK TEST

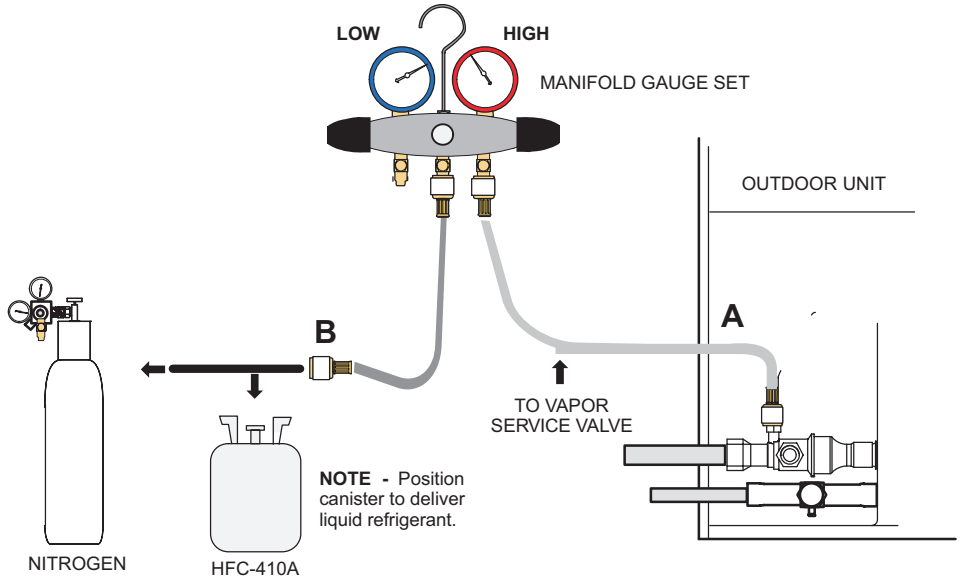

1 CONNECT GAUGE SET

A - Connect the high pressure hose of an HFC-410A manifold gauge set to the vapor valve service port.

NOTE *- Normally, the high pressure hose is connected to the liquid line port. However, connecting it to the vapor port better protects the manifold gauge set from high pressure damage.*

B - With both manifold valves closed, connect the cylinder of HFC-410A refrigerant to the center port of the manifold gauge set.

NOTE *- Later in the procedure, the HFC-410A container will be replaced by the nitrogen container.*

2 TEST FOR LEAKS

After the line set has been connected to the indoor and outdoor units, check the line set connections and indoor unit for leaks. Use the following procedure to test for leaks:

A - With both manifold valves closed, connect the cylinder of HFC-410A refrigerant to the center port of the manifold gauge set. Open the valve on the HFC-410A cylinder (vapor only).

B - Open the high pressure side of the manifold to allow HFC-410A into the line set and indoor unit. Weigh in a trace amount of HFC-410A. *[A trace amount is a maximum of two ounces (57 g) refrigerant or three pounds (31 kPa) pressure.]* Close the valve on the HFC-410A cylinder and the valve on the high pressure side of the manifold gauge set. Disconnect the HFC-410A cylinder.

C - Connect a cylinder of nitrogen with a pressure regulating valve to the center port of the manifold gauge set.

D - Adjust nitrogen pressure to 150 psig (1034 kPa). Open the valve on the high side of the manifold gauge set in order to pressurize the line set and the indoor unit.

E - After a few minutes, open one of the service valve ports and verify that the refrigerant added to the system earlier is measurable with a leak detector.

F - After leak testing, disconnect gauges from service ports.

0926
508844-01

EVACUATION

3 CONNECT GAUGE SET

NOTE *- Remove cores from service valves (if not already done).*

A - Connect low side of manifold gauge set with 1/4 SAE in-line tee to *vapor* line service valve

B - Connect high side of manifold gauge set to *liquid* line service valve

C - Connect available micron gauge connector on the 1/4 SAE in-line tee.

D - Connect the vacuum pump (with vacuum gauge) to the center port of the manifold gauge set. The center port line will be used later for both the R454B and nitrogen containers.

NOTE - *Position canister to deliver liquid refrigerant.*

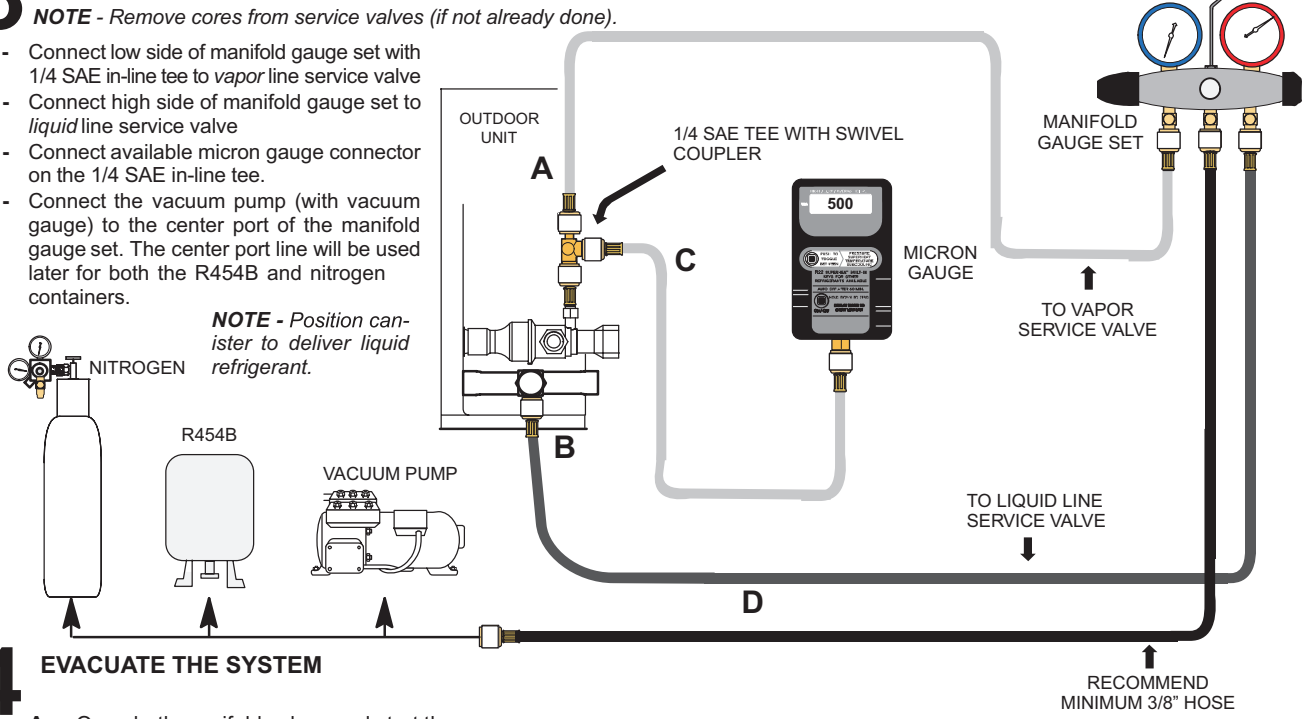

4 EVACUATE THE SYSTEM

A - Open both manifold valves and start the vacuum pump.

B - Evacuate the line set and indoor unit to an **absolute pressure** of 23,000 microns (29.01 inches of mercury).

NOTE *- During the early stages of evacuation, it is desirable to close the manifold gauge valve at least once. A rapid rise in pressure indicates a relatively large leak. If this occurs,* ***repeat the leak testing procedure****.*

NOTE *- The term* ***absolute pressure*** *means the total actual pressure above absolute zero within a given volume or system. Absolute pressure in a vacuum is equal to atmospheric pressure minus vacuum pressure.*

C - When the absolute pressure reaches 23,000 microns (29.01 inches of mercury), perform the following:

- Close manifold gauge valves.
- Close valve on vacuum pump.
- Turn off vacuum pump.
- Disconnect manifold gauge center port hose from vacuum pump.
- Attach manifold center port hose to a nitrogen cylinder with pressure regulator set to 160 psig (1103 kPa) and purge the hose.
- Open manifold gauge valves to break the vacuum in the line set and indoor unit.
- Close manifold gauge valves.

WARNING !

Possible equipment damage.

Avoid deep vacuum operation. Do not use compressors to evacuate a system. Extremely low vacuum can cause internal arcing and compressor failure. Damage caused by deep vacuum operation will void warranty.

D - Shut off the nitrogen cylinder and remove the manifold gauge hose from the cylinder. Open the manifold gauge valves to release the nitrogen from the line set and indoor unit.

E - Reconnect the manifold gauge to the vacuum pump, turn the pump on, and continue to evacuate the line set and indoor unit until the absolute pressure does not rise above 500 microns (29.9 inches of mercury) within a 20-minute period after shutting off the vacuum pump and closing the manifold gauge valves.

F - When the absolute pressure requirement above has been met, disconnect the manifold hose from the vacuum pump and connect it to a cylinder of R454B positioned to deliver liquid refrigerant. Open the manifold gauge valve 1 to 2 psig in order to release the vacuum in the line set and indoor unit.

G - Perform the following:

- Close manifold gauge valves.
- Shut off R454B cylinder.
- Reinstall service valve cores by removing manifold hose from service valve. Quickly install cores with core tool while maintaining a positive system pressure.
- Replace stem caps and finger tighten them, then tighten an additional one-sixth (1/6) of a turn as illustrated.

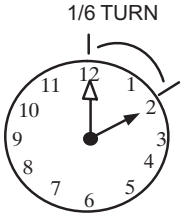

Electrical - Circuit Sizing and Wire Routing

In the U.S.A., wiring must conform with current local codes and the current National Electric Code (NEC). In Canada, wiring must conform with current local codes and the current Canadian Electrical Code (CEC).

Refer to the furnace or air handler installation instructions for additional wiring application diagrams and refer to "outdoor unit" nameplate for minimum circuit ampacity and maximum overcurrent protection size.

24VAC Transformer

Use the transformer provided with the furnace or air handler for low-voltage control power (24VAC - 40 VA minimum).

Thermostat Control and Low Voltage Control Wiring

Conventional 24VAC Thermostat Control

The **ML15KSPV** variable capacity unit may be installed using a conventional 24VAC two-stage cooling or heat pump thermostat.

The **ML15KSPV** unit will provide full variable capacity operation when installed with a conventional 24VAC two stage heat pump thermostat. The **ML15KSPV** outdoor control has advanced control algorithms, which provide true variable speed capacity operation by modulating the compressor speed to achieve the target suction set point in cooling mode, and liquid set point in heating mode.

When utilizing a two-stage conventional heat pump 24VAC thermostat, six wires are required to control the outdoor unit (R, C, W1, O, Y1 and Y2). Refer to the **ML15KSPV** field wiring diagram for a conventional 24VAC two-stage heat pump thermostat.

⚠ WARNING

ELECTRICAL SHOCK HAZARD!

Can cause injury or death. Unit must be properly grounded in accordance with national and local codes.

Line voltage is present at all components when unit is not in operation on units with single-pole contactors. Disconnect all remote electric power supplies before opening access panel. Unit may have multiple power supplies.

⚠ WARNING

Fire Hazard. Use of aluminum wire with this product may result in a fire, causing property damage, severe injury or death. Use copper wire only with this product.

⚠ WARNING

Failure to use properly sized wiring and circuit breaker may result in property damage. Size wiring and circuit breaker(s) per Technical Specifications and unit rating plate.

⚠ WARNING

ELECTROSTATIC DISCHARGE (ESD)

Precautions and Procedures

Electrostatic discharge can affect electronic components. Take care during unit installation and service to protect the unit's electronic controls. Precautions will help to avoid control exposure to electrostatic discharge by putting the unit, the control and the technician at the same electrostatic potential. Touch hand and all tools on an unpainted unit surface before performing any service procedure to neutralize electrostatic charge.

Table 6. ML15KSPV Thermostat Control Options

Thermostat Type	Indoor Unit Type	Qty. of Wires to	ML15KSPV Terminal Strip Connections	Unit Operation	Field Wiring Diagram
Conventional 24VAC 2-Stage Cooling Thermostat	Any Furnace or Air Handler	6	R, C, W1, O/B, Y1, Y2	Full Variable Capacity Operation Controlled by **ML15KSPV** Control Using Suction Temperature	page 30

Install Thermostat

Install room thermostat (ordered separately) on an inside wall approximately in the center of the conditioned area and 5 feet (1.5m) from the floor. It should not be installed on an outside wall or where it can be affected by sunlight or drafts.

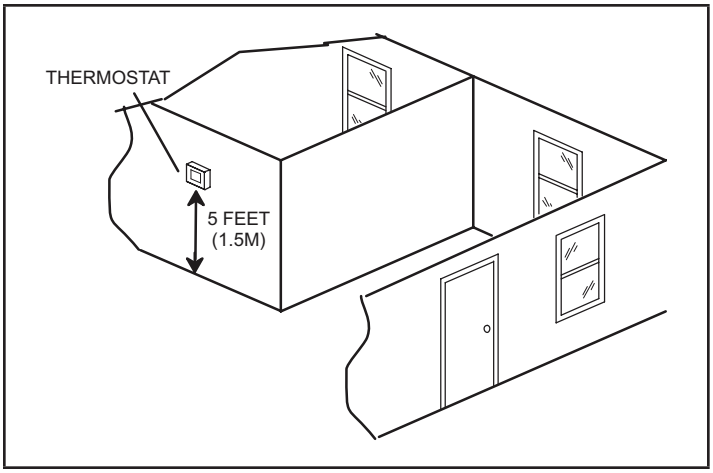

Figure 16. Optimal Thermostat Placement

NOTE: 24VAC, Class II circuit connections are made in the control panel.

Size Circuit and Install Service Disconnect Switch

Refer to the unit nameplate for minimum circuit ampacity, and maximum fuse or circuit breaker (HACR per NEC). Install power wiring and properly sized disconnect switch

NOTE: Units are approved for use only with copper conductors. Ground unit at disconnect switch or connect to an earth ground.

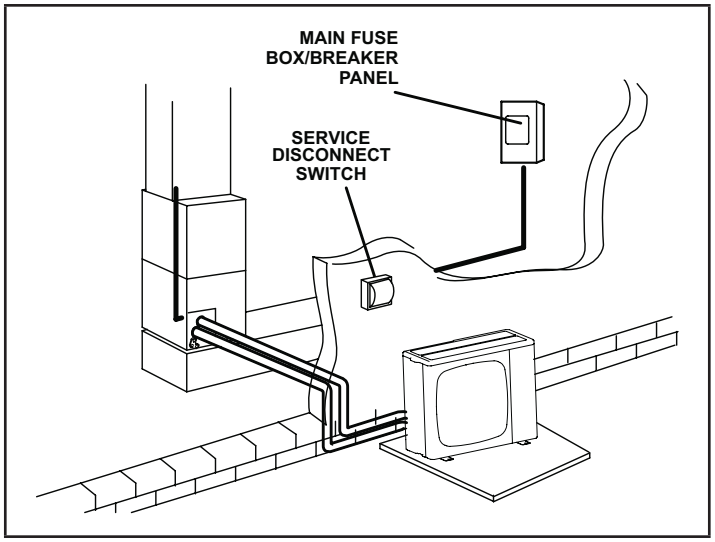

Figure 17. Circuit Installation

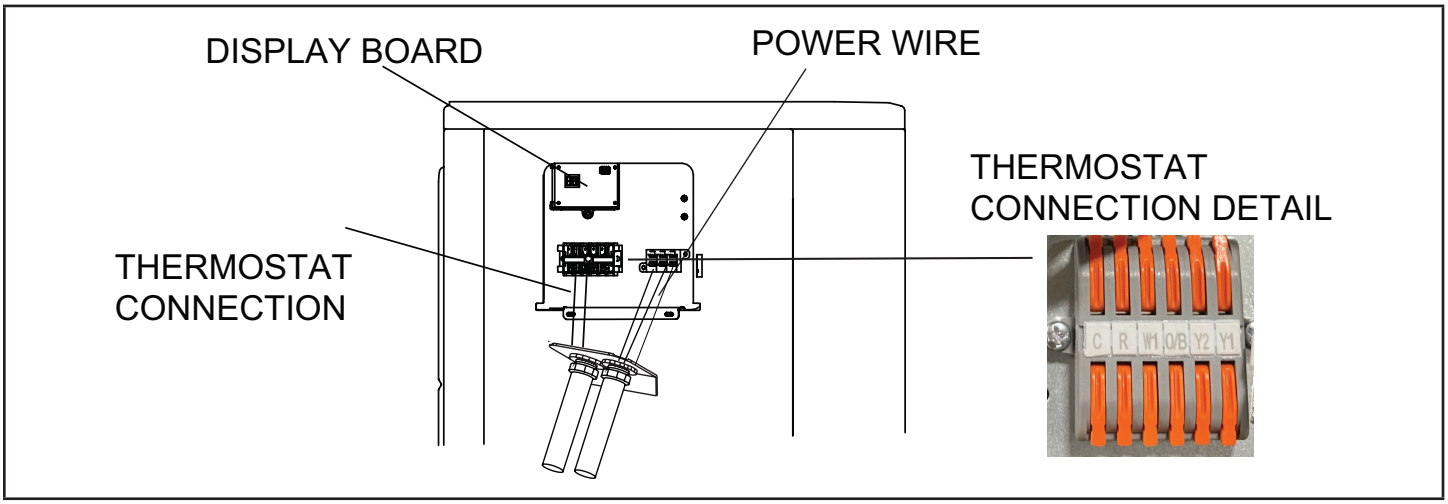

Figure 18. Thermostat Connection

NOTE: Select the appropriate conduit opening for the wire size used.

0926
508844-01

Route Control Wires

Table 7. Conventional 24VAC Thermostat Wiring

Wire Run Length	AWG#	Insulation Type
Less than 100’ (30m)	18	Temperature Rating 35°C (95°F) Minimum
More than 100’ (30m)	16	

⚠ WARNING

Improper installation, adjustment, alteration, service or maintenance can cause property damage, personal injury or loss of life.

Installation and service must be performed by a licensed professional HVAC installer (or equivalent) or a service agency.

⚠ WARNING

All systems equipped with at least 4 lbs of low-GWP A2L-classified refrigerant are required to have a refrigerant leak detection system installed to prevent the build up of low-flammable refrigerant in enclosed spaces of the HVAC equipment. A refrigerant detection system may be required for systems that have less than 4 lbs of low-GWP refrigerant. For more information on this, contact Technical Support.

Installing OEM low GWP residential HVAC equipment without a refrigerant detection system may lead to a fire hazard within the home in the event of a refrigerant leak.

⚠ WARNING

This unit uses an A2L (mildly flammable) refrigerant. All electrical work shall be performed in a manner that minimizes the risk of ignition in the unlikely event of a refrigerant leak.

- Ensure all equipment grounding and bonding is completed in accordance with NEC / CEC and local code requirements.
- Electrical connections shall be tight, secure, and free of arcing, sparking, or overheating conditions.
- Do not install or route electrical components where they may be exposed to refrigerant discharge, pooling, or accumulation.
- Do not energize the unit if electrical wiring is damaged, loose, or improperly terminated.
- Only use factory-approved or listed electrical components when servicing or replacing parts.

Failure to follow proper grounding, bonding, and wiring practices may increase the risk of ignition and can result in equipment damage, personal injury, or death.

Route High Voltage and Ground Wires

Any excess high voltage field wiring should be trimmed and secured away from any low voltage field wiring. To facilitate a conduit, a cutout is located on the bottom of the control box. Connect conduit to the control box using a proper conduit fitting.

Connect the 208/230 high voltage power supply from the disconnect to the **ML15KSPV** contactor as shown. Connect the ground wire from the power supply to the unit ground lug connection.

⚠ WARNING

The RDS Non-Communicating Blower Control Board has been tested with OEM matched coils only. Do not use a non-OEM refrigerant detection system controller or non-OEM leak sensor with OEM coils. Do not use the RDS Non-Communicating Blower Control Board with other manufacturer’s coils or air handlers.

⚠ WARNING

Improper installation of the RDS Non-Communicating Blower Control Board may lead to unreliable equipment operation and possible fire hazard from refrigerant leaks.

In addition to installing the RDS Non-Communicating Blower Control Board, considerations must be made regarding sensor mounting location. Please refer to respective OEM air handler, coil, and/or sensor kit installation guides for further details.

⚠ CAUTION

Any service personnel installing, decommissioning, or performing maintenance on the unit must be properly trained and certified with low GWP refrigerants.

Unit must remain powered except for service.

Certifications

- CSA C22.2 No. 60335-2-40:22; Fourth ed.
- UL 60335-2-40; Fourth ed.

Shipping and Packing List

Qty	Description	Cat. No.
1	Lennox Low GWP Refrigerant Detection System	27A02
2	Mounting Hardware - #6-18 1” Phillips Drive pan head with dry wall anchor	N/A

NOTE: Refer to the two stage RDS wiring diagrams for proper set up of the refrigerant detection system.

RDS Wiring Diagrams for Two Stage Heat Pump with Two Stage Furnace/Air Handler

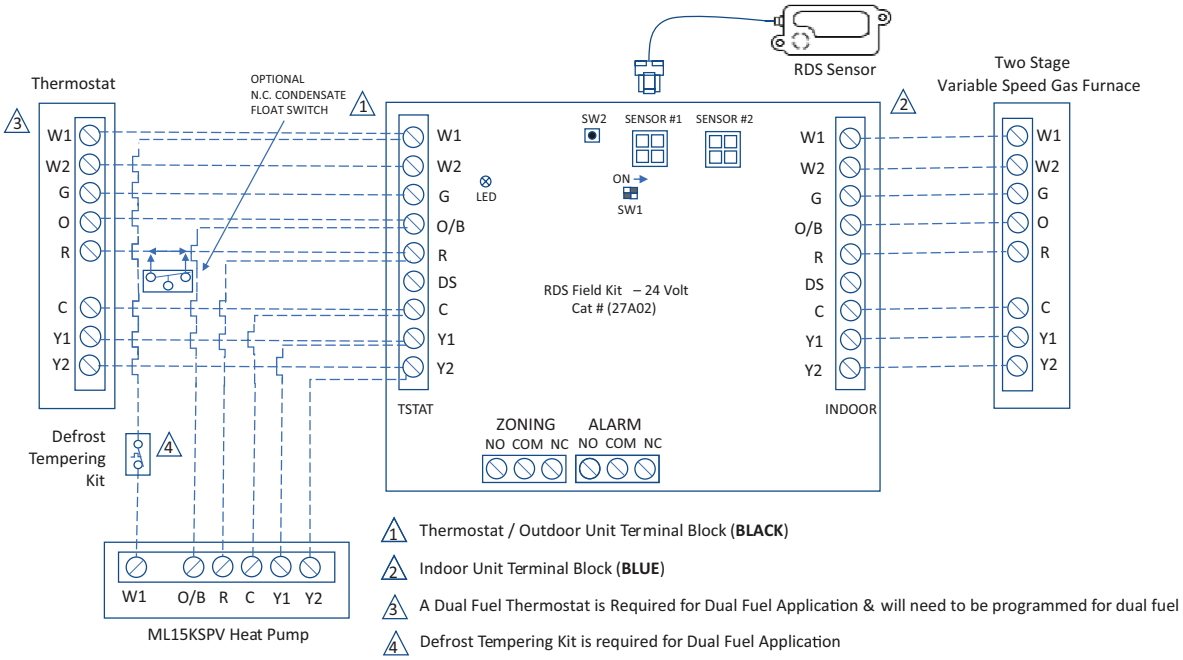

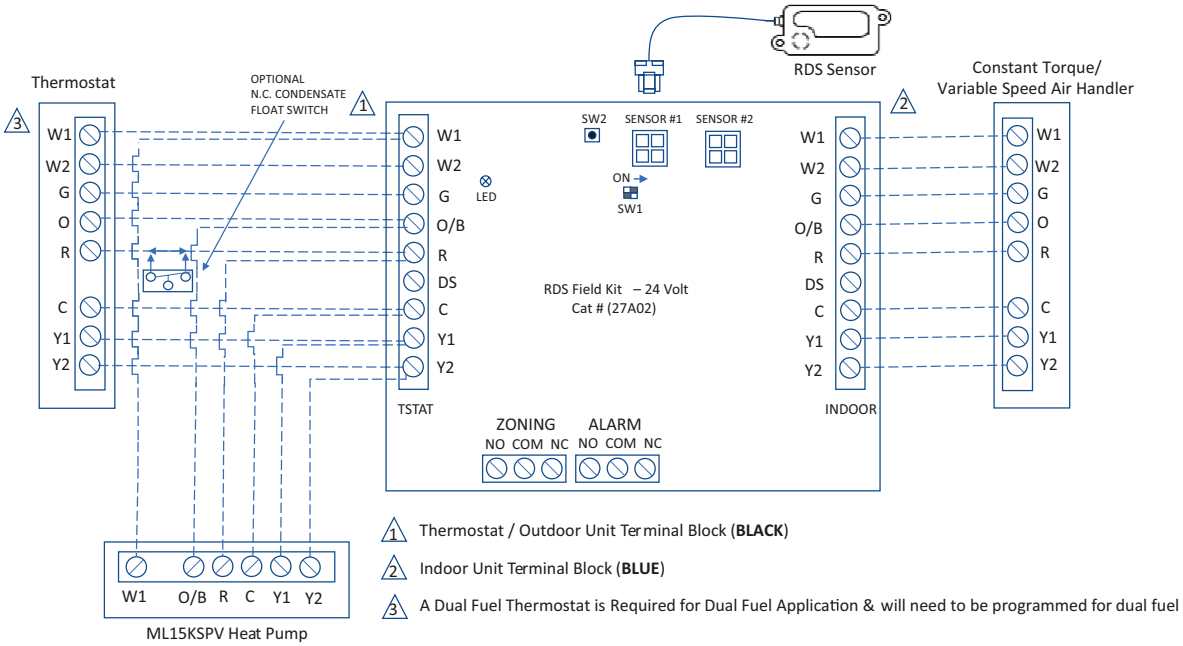

NOTE: Refer to the RDS installation instruction booklet for further information.

0926
508844-01

Outdoor Unitary Control

DIP and Terminals

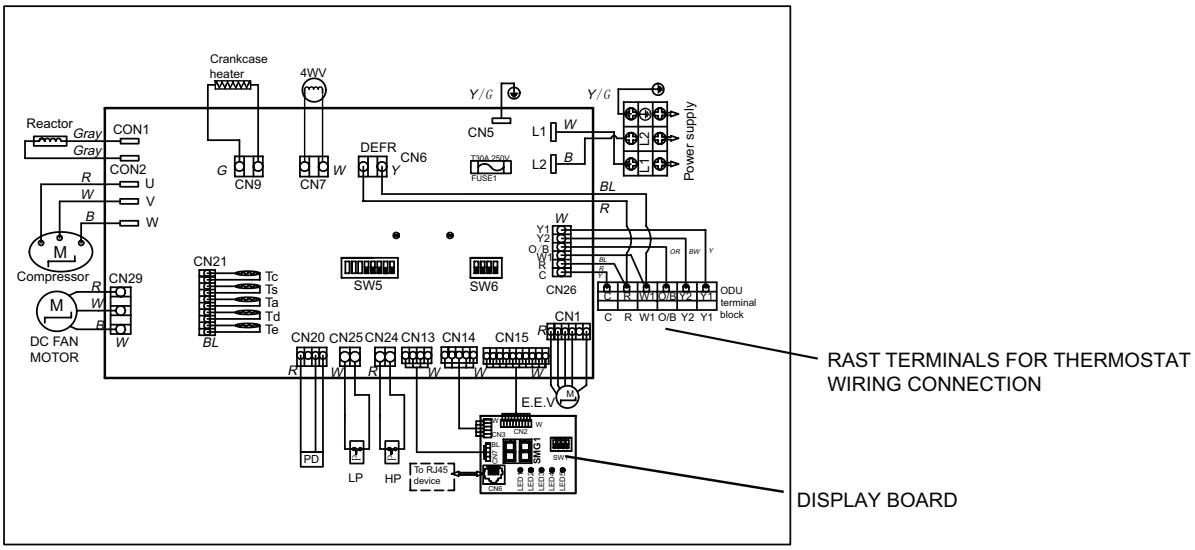

Figure 19. 18K/24K/30K/36K/42K/48K Wiring Diagram

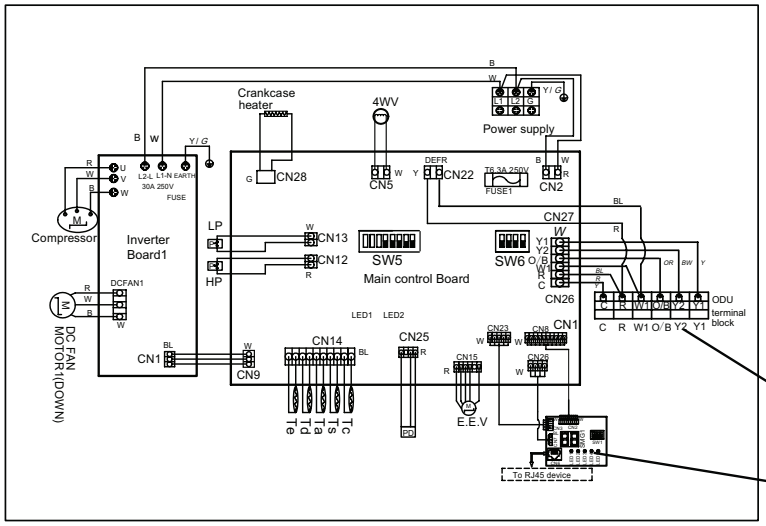

LP/HP: Low/High Pressure Switch
Tc: Condensing Temp.Sensor
Ts: Condensing Suction Temp.Sensor
Ta: Ambient Temp.Sensor
Td: Compressor Discharge Temp.Sensor
Te: Condensing Out Temp.Sensor
PD: Low Pressure Sensor for Cooling
High Pressure Sensor for Heating

4WV: 4 Way Valve
SW5 function is shown in **Table 8**
SW6 test dip (do not move unless tested)

TERMINALS FOR THERMOSTAT WIRING CONNECTION

DISPLAY BOARD

Figure 20. 60K Wiring Diagram

Display Board

Information labels concerning the outdoor control 2-segment display and DIP operations are available on the unit control panel cover.

Alarms

Alarm information is provided on the unit control panel cover.

Charge Mode DIP

To initiate the **ML15KSPV** Charge Mode function, install the charge mode of cooling and heating can be adjusted through the dip switch of the display board.

Charge Mode Operation with a Conventional 24VAC Heat Pump Thermostat.

Charge Mode Display String

When unit is in the cooling charge mode, 2-segment display displays the current Subcooling.

0926
508844-01

Charge Mode DIP Operation in the Cooling Mode

The operation mode of DIP switch SW1 on the display board is shown in **Table 9**. After the system is started, the system needs to be stabilized for 10 minutes. Compare the subcooling value that is displayed after 10 minutes with the target subcooling value in **Table 10**.

Charge Mode DIP Operation in the Heat Pump Heating Mode

To test the subcooling degree in heating mode, an external pressure gauge and thermometer need to be connected, and the pressure and measurement temperature are connected as shown in the **Figure 21.** The saturation temperature of the refrigerant is checked through **Table 11**, and the current subcooling degree is obtained by using the temperature measured by the saturation temperature minus the thermometer, and the target subcooling degree is compared with that in **Table 10**.

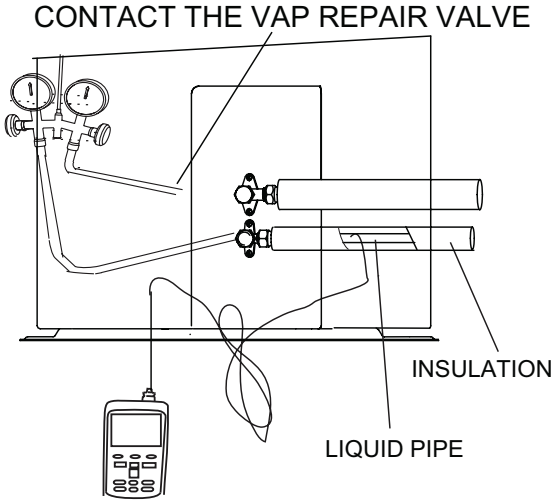

Figure 21. VAP Repair Valve

Table 8. Control Board DIP SW5

SW5							
			[1]	[2]	[3]	Outdoor Unit Size	
SW5_1_2_3*	ODU	ON	▮			18K	
		OFF		▮	▮		
		ON		▮		24K	
		OFF	▮		▮		
		ON	▮	▮		30K	
		OFF			▮		
		ON			▮	36K	
		OFF	▮	▮			
		ON	▮		▮	42K	
		OFF		▮			
		ON		▮	▮	48K	
		OFF	▮				
		ON	▮	▮	▮	60K	
		OFF					
SW5_4*	Communication Mode	ON				Reserved	
		OFF				24V Control	
SW5_5_6*	24V Control Energy Efficiency Testing and Actual Use of Internal Machine Selection	[5]		[6]		24V control indoor unit set	
		OFF		OFF		IDU 1	For AHU Test & Use
		OFF		ON		IDU 2	For Coil+Furnace Test & Use
		ON		OFF		IDU 3	For A-coil Test
		ON		ON		IDU 4	Reserved
SW5_7*	24V Control Heat Pump Changeover Valve	ON				Heating Changeover Valve: Use this setting if your thermostat heating is “B”	
		OFF				Cooling Changeover Valve: Use this setting if your thermostat cooling is “O”.	
SW5_8*	Reserved	ON				Reserved	
		OFF				Reserved	

* **LEAVE AS FACTORY DEFAULT**

Table 9. Service Board DIP SW1

SW1		1	2	3	4		
		Dehum. 1	Dehum. 2	Heating	Defrost	Cooling	Heating
MODE	ON					Default Cooling	Default Heating + Default Defrost
	OFF	▮	▮	▮	▮		
	ON				▮	Default Cooling	Default Heating + Strong Defrost
	OFF	▮	▮	▮			
	ON			▮		Default Cooling	Comfort Heating or Full-Load Airflow Rate <300 Scfm/Ton + Default Defrost
	OFF	▮	▮		▮		
	ON			▮	▮	Default Cooling	Comfort Heating or Full-Load Airflow Rate <300 Scfm/Ton + Strong Defrost
	OFF	▮	▮				
	ON	▮				Dehum. 1 or Full-Load Airflow Rate <300 Scfm/Ton	Default Heating + Default Defrost
	OFF		▮	▮	▮		
	ON	▮			▮	Dehum. 1 or Full-Load Airflow Rate <300 Scfm/Ton	Default Heating + Strong Defrost
	OFF		▮	▮			
	ON	▮		▮		Dehum. 1 or Full-Load Airflow Rate <300 Scfm/Ton	Comfort Heating or Full-Load Airflow Rate <300 Scfm/Ton + Default Defrost
	OFF		▮		▮		
	ON	▮		▮	▮	Dehum. 1 or Full-Load Airflow Rate <300 Scfm/Ton	Comfort Heating or Full-Load Airflow Rate <300 Scfm/Ton + Strong Defrost
	OFF		▮				
	ON		▮			Dehum. 2 or Full-Load Airflow Rate <300 Scfm/Ton	Default Heating + Default Defrost
	OFF	▮		▮	▮		
	ON		▮		▮	Dehum. 2 or Full-Load Airflow Rate <300 Scfm/Ton	Default Heating + Strong Defrost
	OFF	▮		▮			
	ON		▮	▮		Dehum. 2 or Full-Load Airflow Rate <300 Scfm/Ton	Comfort Heating or Full-Load Airflow Rate <300 Scfm/Ton + Default Defrost
	OFF	▮			▮		
	ON		▮	▮	▮	Dehum. 2 or Full-Load Airflow Rate <300 Scfm/Ton	Comfort Heating or Full-Load Airflow Rate <300 Scfm/Ton + Strong Defrost
	OFF	▮					
FORCED & CHARGE MODE	ON	▮	▮			TEST MODE	
	OFF			▮	▮		
	ON	▮	▮		▮	DIAGNOSTIC MODE	
	OFF			▮			
	ON	▮	▮	▮		CHARGE MODE FOR HEATING	
	OFF				▮		
	ON	▮	▮	▮	▮	CHARGE MODE FOR COOLING	
	OFF						
FUNCTION DESCRIPTION	1. When dehum. mode 1 is effective, it will immediately reduce the unit's target evaporation temperature by 2~5°F (1.1 ~ 2.8°C); When dehum. mode 2 is effective, it will immediately reduce the unit's target evaporation temperature by 5~7°F (2.8 ~ 3.9°C) and reduce the target evaporation temperature by 1.8°F (1.0°C) every 30 minutes until the frequency reaches its maximum or the target evaporation temperature reaches its minimum.						
	2. When the comfortable heating mode is effective, it will immediately increase the unit's target condensation temperature by 2~5°F (1.1 ~ 2.8°C)and increase the target condensation temperature by 1.8°F (1.0°C) every 30 minutes until the frequency reaches its maximum or the target condensation temperature reaches its maximum value.						
	3. SW1-4 performs manual defrosting from OFF to ON (only the heating mode is valid; the exit conditions refer to normal defrosting; each dip switch from OFF to ON only enters once the next time you enter must meet the dip switch from OFF to ON; after manual defrosting, if the dip switch is still ON\, enter strong defrosting mode).						
	4. When strong defrosting is effective, the unit defrosting interval will be shorter; defrosting time will be increased. Suitable for areas with high humidity.						

Table 10. Indoor Unit Matches and Sub-cooling Charge Levels (TXV System) and Additional Charge (15 ft. Line set)

Indoor Matchup	Subcool		Additional Charge
	Heat (±3ºF)	Cool (±1ºF)	lbs/oz
18K HP			
CBK43UHE-018	5	6	0 lb 6 oz
CBK43UHE-024	4	6	0 lb 9 oz
CBK45UHVT-018	5	4	0 lb 6 oz
CBK45UHET-024	4	4	0 lb 9 oz
CBK45UHVT-024	4	4	0 lb 9 oz
CBK47UHET-024	4	4	0 lb 11 oz
CBK48MVT-018/024	4	4	0 lb 11 oz
CK40[C,U]T-24A	4	4	0 lb 9 oz
CK40[C,U]T-24B	4	4	0 lb 9 oz
CK40[C,U]T-30A	3	5	0 lb 13 oz
CK40[C,U]T-30B	3	5	0 lb 13 oz
CK40HT-24A	5	3	0 lb 3 oz
CK40HT-24B	6	3	0 lb 0 oz
CK40HT-30A	5	3	0 lb 3 oz
CK40HT-30B	3	5	0 lb 13 oz
CK40DT-24A	5	4	0 lb 8 oz
CK40DT-24B	5	4	0 lb 8 oz
24K HP			
CBK43UHE-024	6	7	1 lb 0 oz
CBK43UHE-030	5	8	1 lb 4 oz
CBK45UHET-024	6	7	1 lb 0 oz
CBK45UHVT-024	6	7	1 lb 0 oz
CBK45UHET-030	5	8	1 lb 4 oz
CBK45UHVT-030	5	8	1 lb 4 oz
CBK47UHET-024	6	7	1 lb 1 oz
CBK47UHET-030	5	9	1 lb 6 oz
CBK48MVT-018/024	6	7	1 lb 1 oz
CBK48MVT-030	5	9	1 lb 6 oz
CK40[C,U]T-24A	6	7	1 lb 0 oz
CK40[C,U]T-24B	6	7	1 lb 0 oz
CK40[C,U]T-30A	5	8	1 lb 4 oz
CK40[C,U]T-30B	5	8	1 lb 4 oz
CK40[C,U]T-36A	4	9	1 lb 7 oz
CK40[C,U]T-36B	4	9	1 lb 7 oz
CK40HT-18A	7	6	0 lb 0 oz
CK40HT-24A	6	7	0 lb 10 oz
CK40HT-24B	7	7	0 lb 7 oz
CK40HT-30A	6	7	0 lb 10 oz
CK40HT-30B	7	9	1 lb 6 oz
CK40DT-24A	6	7	0 lb 14 oz
CK40DT-24B	6	7	0 lb 14 oz

Indoor Matchup	Subcool		Additional Charge
	Heat (±3ºF)	Cool (±1ºF)	lbs/oz
30K HP			
CBK43UHE-030	4	7	1 lb 5 oz
CBK43UHE-036	5	5	1 lb 5 oz
CBK45UHET-030	4	7	1 lb 5 oz
CBK45UHVT-030	4	7	1 lb 5 oz
CBK45UHET-036	5	5	1 lb 5 oz
CBK45UHVT-036	5	5	1 lb 5 oz
CBK47UHET-030	7	7	1 lb 2 oz
CBK47UHET-036	7	7	1 lb 2 oz
CBK48MVT-030	7	7	1 lb 2 oz
CBK48MVT-036	7	7	1 lb 2 oz
CK40[C,U]T-30A	4	5	0 lb 14 oz
CK40[C,U]T-30B	4	5	0 lb 14 oz
CK40[C,U]T-36A	5	5	1 lb 5 oz
CK40[C,U]T-36B	5	5	1 lb 5 oz
CK40HT-30A	4	3	0 lb 3 oz
CK40HT-30B	5	5	1 lb 5 oz
CK40HT-36A	4	3	0 lb 5 oz
CK40HT-36B	4	3	0 lb 0 oz
CK40HT-36C	8	4	0 lb 8 oz
CK40DT-24A	10	4	0 lb 8 oz
CK40DT-30/36B	10	5	0 lb 13 oz
CK40DT-42B	7	7	1 lb 6 oz

NOTE: For AHRI Certified system match-ups and expanded ratings, visit www.LennoxPros.com.

Indoor Matchup	Subcool		Additional Charge
	Heat (±3ºF)	Cool (±1ºF)	lbs/oz
36K HP			
CBK43UHE-036	4	5	1 lb 5 oz
CBK43UHE-042	4	5	1 lb 5 oz
CBK45UHET-036	4	5	1 lb 5 oz
CBK45UHVT-036	4	5	1 lb 5 oz
CBK45UHET-042	4	5	1 lb 5 oz
CBK45UHVT-042	4	5	1 lb 5 oz
CBK47UHET-036	5	5	1 lb 2 oz
CBK47UHET-042	3	5	2 lb 0 oz
CBK48MVT-036	5	4	1 lb 2 oz
CBK48MVT-042	3	5	2 lb 0 oz
CK40[C,U]T-30A	5	4	0 lb 14 oz
CK40[C,U]T-30B	5	4	0 lb 14 oz
CK40[C,U]T-36A	4	6	1 lb 5 oz
CK40[C,U]T-36B	4	6	1 lb 5 oz
CK40[C,U]T-36C	4	6	1 lb 5 oz
CK40HT-36A	6	4	0 lb 5 oz
CK40HT-36B	6	3	0 lb 0 oz
CK40HT-36C	6	4	0 lb 8 oz
CK40DT-30/36B	4	4	0 lb 13 oz
CK40DT-30/36C	4	4	0 lb 13 oz
CK40DT-42B	3	6	1 lb 6 oz
CK40DT-48C	3	7	1 lb 11 oz
42K HP			
CBK43UHE-042	4	4	0 lb 0 oz
CBK43UHE-048	4	5	0 lb 6 oz
CBK45UHET-042	4	4	0 lb 0 oz
CBK45UHVT-042	4	4	0 lb 0 oz
CBK45UHET-048	5	5	0 lb 6 oz
CBK45UHVT-048	5	5	0 lb 6 oz
CBK47UHET-042	5	4	1 lb 6 oz
CBK47UHET-048	5	4	1 lb 6 oz
CBK48MVT-042	5	4	1 lb 6 oz
CBK48MVT-048	5	4	1 lb 6 oz
CK40[C,U]T-48B	6	5	0 lb 6 oz
CK40[C,U]T-48C	6	5	0 lb 6 oz
CK40[C,U]T-49C	5	5	0 lb 11 oz
CK40HT-42B	4	5	1 lb 8 oz
CK40HT-42C	3	3	0 lb 2 oz
CK40HT-48B	3	3	0 lb 1 oz
CK40HT-48C	4	3	0 lb 2 oz
CK40DT-42B	3	3	0 lb 2 oz
CK40DT-48C	3	5	0 lb 7 oz

Indoor Matchup	Subcool		Additional Charge
	Heat (±3ºF)	Cool (±1ºF)	lbs/oz
48K HP			
CBK43UHE-048	4	11	0 lb 4 oz
CBK43UHE-060	4	11	0 lb 13 oz
CBK45UHET-048	5	11	0 lb 4 oz
CBK45UHET-060	5	11	0 lb 13 oz
CBK45UHVT-048	5	11	0 lb 4 oz
CBK45UHVT-060	5	11	0 lb 13 oz
CBK47UHET-048	5	11	0 lb 14 oz
CBK47UHET-060	5	11	1 lb 8 oz
CBK48MVT-048	5	11	0 lb 14 oz
CBK48MVT-060	5	11	1 lb 8 oz
CK40[C,U]T-48B	6	9	0 lb 4 oz
CK40[C,U]T-48C	6	9	0 lb 4 oz
CK40[C,U]T-49C	5	9	0 lb 8 oz
CK40[C,U]T-50/60C	5	9	0 lb 4 oz
CK40HT-42B	6	8	1 lb 2 oz
CK40HT-42C	6	11	0 lb 0 oz
CK40HT-48B	6	11	0 lb 0 oz
CK40HT-48C	6	11	0 lb 0 oz
CK40HT-51/61C	9	11	0 lb 14 oz
CK40HT-60D	4	9	1 lb 5 oz
CK40DT-42B	6	9	0 lb 0 oz
CK40DT-48C	7	9	0 lb 6 oz
CK40DT-50/60C	7	9	0 lb 11 oz
60K HP			
CBK43UHE-060	5	8	0 lb 10 oz
CBK45UHET-060	5	10	0 lb 10 oz
CBK45UHVT-060	5	10	0 lb 10 oz
CBK47UHET-060	5	9	1 lb 7 oz
CBK48MVT-060	5	9	1 lb 7 oz
CK40[C,U]T-50/60C	5	9	0 lb 0 oz
CK40[C,U]T-60C	5	9	0 lb 10 oz
CK40[C,U]T-60D	5	10	0 lb 5 oz
CK40HT-51/61C	5	10	1 lb 3 oz
CK40HT-60D	5	8	1 lb 3 oz
CK40DT-50/60C	5	10	0 lb 8 oz
CK40DT-60D	5	10	0 lb 8 oz

NOTE: For AHRI Certified system match-ups and expanded ratings, visit www.LennoxPros.com.

Diagnostic Mode Check Table

1. When the diagnostic mode is activated, the inspection sequence number and the inspection content will be displayed in sequence, such as 00 24 02 Co ... 15 13 18 --. The content will be displayed in the sequence described in the table below. The display will show the sequence number for 1 second. Then it will display the content value for 1 second. Then it will display the content value for 1 second.
2. After the unit has cycled through all content and content values, it will return to normal display.

No.	Point Check Content	Example	Remark
0	Outdoor unit capacity	24	Model
1	Outdoor unit mode	Co	Cooling: Co, Heating: He, Holding state: oF, Return oil mode: ol, Defrost: dE
2	Compressor Speed	56	Units: Hz
3	Outdoor fan speed step	6	The current fan speed step is at 6
4	Opening of EXV	26	Actual value / 10 (round)
5	Target refrigerant temperature	48	Cooling: ETS, Heating: CTS, Units: ºF
6	Current refrigerant temperature	48	Cooling: ETS, Heating: CTS, Units: ºF
7	Tao	95	Units: ºF
8	TC	115	Units: ºF
9	Te	109	Units: ºF
10	Ts	65	Units: ºF
11	Td	156	Units: ºF
12	Compressor input current	10	Units: A
13	Module Temp	65	Units: ºF
14	Soft Ver.	30	Mean: software version is 3.0
15	E2 Ver.	12	Mean: E2 parameter version is 1.2
16	ER	ER	If the ER is displayed, it indicates a malfunction. If there is no malfunction, it will not be displayed and will be skipped directly.
17	The current fault code	12	If 16 indicates “ER”, display the current fault code: otherwise, skip without showing anything.
18	--	--	End mark

1. When the number exceeds 100, it is represented by letters. A1 stands for 101, B1 represents 111, and C1 indicates 121.
2. Add a dot after the negative value. For example: 01. represents -1ºF

0926
508844-01

Table 11. HFC-454B Temperature (°F) Pressure (Psig)

Pressure (psig)	Saturated Liquid Temp (ºF)	Saturated Vapor Temp (ºF)	Pressure (psig)	Saturated Liquid Temp (ºF)	Saturated Vapor Temp (ºF)	Pressure (psig)	Saturated Liquid Temp (ºF)	Saturated Vapor Temp (ºF)	Pressure (psig)	Saturated Liquid Temp (ºF)	Saturated Vapor Temp (ºF)
0	-58.9	-57.1	158	58.9	61.3	272	93.0	95.4	362	113.3	115.6
25	-19.2	-17.2	160	59.6	62.0	274	93.5	95.9	364	113.8	116.0
30	-13.9	-11.8	165	61.4	63.8	276	94.0	96.4	366	114.2	116.4
35	-9.0	-6.9	170	63.1	65.5	278	94.5	96.9	368	114.6	116.8
40	-4.4	-2.3	175	64.9	67.3	280	95.0	97.4	370	115.0	117.2
45	-0.2	1.9	180	66.6	69.0	282	95.5	97.9	372	115.4	117.6
50	3.7	5.9	185	68.2	70.6	284	96.0	98.4	374	115.8	118.0
55	7.5	9.7	190	69.8	72.2	286	96.5	98.8	376	116.2	118.4
60	11.0	13.2	195	71.4	73.8	288	97.0	99.3	378	116.6	118.8
65	14.4	16.6	200	73.0	75.4	290	97.5	99.8	380	117.0	119.2
70	17.6	19.8	202	73.6	76.0	292	97.9	100.3	382	117.4	119.5
75	20.6	22.9	204	74.2	76.6	294	98.4	100.7	384	117.7	119.9
80	23.6	25.9	206	74.9	77.3	296	98.9	101.2	386	118.1	120.3
85	26.4	28.7	208	75.5	77.9	298	99.4	101.7	388	118.5	120.7
90	29.1	31.4	210	76.1	78.5	300	99.8	102.1	390	118.9	121.1
95	31.7	34.0	212	76.7	79.1	302	100.3	102.6	392	119.3	121.5
100	34.3	36.6	214	77.3	79.7	304	100.7	103.1	394	119.7	121.9
102	35.3	37.6	216	77.9	80.2	306	101.2	103.5	396	120.1	122.2
104	36.2	38.6	218	78.4	80.8	308	101.7	104.0	398	120.4	122.6
106	37.2	39.5	220	79.0	81.4	310	102.1	104.4	400	120.8	123.0
108	38.1	40.5	222	79.6	82.0	312	102.6	104.9	405	121.8	123.9
110	39.1	41.4	224	80.2	82.6	314	103.0	105.3	410	122.7	124.8
112	40.0	42.4	226	80.8	83.1	316	103.5	105.8	415	123.6	125.8
114	40.9	43.3	228	81.3	83.7	318	103.9	106.2	420	124.6	126.7
116	41.8	44.2	230	81.9	84.3	320	104.4	106.7	425	125.5	127.6
118	42.7	45.1	232	82.5	84.8	322	104.8	107.1	430	126.4	128.5
120	43.6	46.0	234	83.0	85.4	324	105.3	107.6	435	127.3	129.3
122	44.5	46.9	236	83.6	86.0	326	105.7	108.0	440	128.2	130.2
124	45.4	47.7	238	84.1	86.5	328	106.2	108.4	445	129.0	131.1
126	46.2	48.6	240	84.7	87.1	330	106.6	108.9	450	129.9	132.0
128	47.1	49.4	242	85.2	87.6	332	107.0	109.3	460	131.6	133.7
130	47.9	50.3	244	85.8	88.1	334	107.5	109.7	470	133.3	135.3
132	48.8	51.1	246	86.3	88.7	336	107.9	110.2	480	135.0	137.0
134	49.6	51.9	248	86.8	89.2	338	108.3	110.6	490	136.7	138.6
136	50.4	52.8	250	87.4	89.7	340	108.8	111.0	500	138.3	140.2
138	51.2	53.6	252	87.9	90.3	342	109.2	111.4	510	139.9	141.7
140	52.0	54.4	254	88.4	90.8	344	109.6	111.9	520	141.5	143.3
142	52.8	55.2	256	88.9	91.3	346	110.0	112.3	530	143.0	144.8
144	53.6	56.0	258	89.5	91.8	348	110.4	112.7	540	144.5	146.3
146	54.3	56.7	260	90.0	92.4	350	110.9	113.1	550	146.1	147.8
148	55.1	57.5	262	90.5	92.9	352	111.3	113.5	560	147.5	149.2
150	55.9	58.3	264	91.0	93.4	354	111.7	113.9	570	149.0	150.7
152	56.6	59.0	266	91.5	93.9	356	112.1	114.4	580	150.5	152.1
154	57.4	59.8	268	92.0	94.4	358	112.5	114.8	590	151.9	153.5
156	58.1	60.5	270	92.5	94.9	360	112.9	115.2	600	153.3	154.8

NOTE

1. R454B is a zeotropic blend and must be charged with liquid refrigerant only.
2. Saturated liquid temperature is used to calculate liquid subcooling.
3. Saturated suction temperature is used to calculate suction superheat.
4. See unit charging label for subcooling values and additional charging information.

Operating and Temperature Pressures (All Builds)

Minor variations in these pressures may be expected due to differences in installations. Significant differences could mean that the system is not properly charged or that a problem exists with some component in the system.

Table 12. Charge Mode Operating Pressure - Liquid 10 and Vapor 5 psig.

ºF (ºC)	18K			24K			30K			36K		
	Liq. (PSI)	Vap. (PSI)	IDU SCFM	Liq. (PSI)	Vap. (PSI)	IDU SCFM	Liq. (PSI)	Vap. (PSI)	IDU SCFM	Liq. (PSI)	Vap. (PSI)	IDU SCFM
Heating Operation												
20(-7)	270	59	600	270	59	800	240	53	940	243	63	1080
30(-1)	289	71		289	71		250	70		261	76	
35(2)	299	77		299	77		256	77		365	82	
40(4)	306	82		306	82		261	80		271	91	
50(10)	323	94		323	94		269	89		286	110	
60(16)	335	102		335	102		261	92		300	124	
Cooling Operation												
65(18)	253	124	600	253	124	800	202	137	940	224	133	1080
70(21)	272	124		272	124		221	137		244	133	
75(24)	293	126		293	126		240	138		265	134	
80(27)	316	127		316	127		261	139		286	135	
85(29)	332	128		332	128		275	138		306	134	
90(32)	358	130		358	130		298	140		324	136	
95(35)	383	132		383	132		322	142		351	138	
100(38)	409	134		409	134		349	144		375	140	
105(41)	438	136		438	136		374	145		402	141	
110(43)	456	137		456	137		394	146		420	142	
115(46)	491	133		491	133		420	147		449	143	

ºF (ºC)	42K			48K			60K		
	Liq. (PSI)	Vap. (PSI)	IDU SCFM	Liq. (PSI)	Vap. (PSI)	IDU SCFM	Liq. (PSI)	Vap. (PSI)	IDU SCFM
Heating Operation									
20(-7)	247	59	1200	248	61	1600	241	59	1900
30(-1)	259	74		259	74		258	73	
35(2)	273	86		268	83		260	79	
40(4)	275	94		274	86		261	85	
50(10)	285	106		290	105		273	98	
60(16)	298	118		308	120		285	107	
Cooling Operation									
65(18)	228	137	1200	228	137	1600	239	137	1900
70(21)	249	137		249	137		248	137	
75(24)	270	138		270	138		265	137	
80(27)	292	139		292	139		287	138	
85(29)	312	138		312	138		301	138	
90(32)	330	140		330	140		324	138	
95(35)	358	142		358	142		347	140	
100(38)	383	144		383	144		390	145	
105(41)	410	145		410	145		396	148	
110(43)	428	146		428	146		412	148	
115(46)	458	147		458	147		438	148	

0926
508844-01

Unit Operation

ML15KSPV Unit Cooling Mode Operation with a Conventional 24VAC 2-Stage Heat Pump Thermostat

When the **ML15KSPV** unit is installed with a conventional 24VAC 2-stage heat pump thermostat, a Y1 first stage cooling demand will initiate cooling operation and first stage indoor blower operation. The compressor will be controlled in the variable capacity mode by varying the compressor capacity to obtain the target Evaporator Suction Temperature (ETS) set point. The Y2 second stage cooling demand will initiate second stage blower operation. Increased air volume will increase the load on the indoor coil and increase the suction temperature. The **ML15KSPV** compressor capacity will continue to be controlled based upon the Evaporator Suction Temperature (ETS). The unit capacity will be controlled in the variable capacity mode throughout the range of capacity from minimum capacity to maximum capacity. If the Y2 demand remains after 30 minutes, the **ML15KSPV** control will begin to adjust the target refrigerant temperature (evaporating for cooling and condensing for heating) to enable the compressor to reach its maximum speed. The minimum value for ETS can be as low as 36°F (2.22°C), and the maximum value for CTS can reach up to 131°F (55°C).

The **ML15KSPV** unit will cycle off once the thermostat demand is satisfied.

NOTE: The unit will time the first 30 minutes when power is cycled and this 30 minutes will not be included in the 30 minute timer for Y2 active.

ML15KSPV Unit Heating Mode Operation with a Conventional 24VAC 2-Stage Heat Pump Thermostat

When the **ML15KSPV** unit is installed with a conventional 24VAC 2-stage heat pump thermostat, a Y1 first stage heating demand will initiate heating operation and first stage indoor blower operation. The compressor will be controlled in the variable capacity mode by varying the compressor capacity to obtain the target Condensing Temperature (CTS) set point. The Y2 second stage heating demand will initiate second stage blower operation. Increased air volume will increase the heat transfer on the indoor coil and decrease the condensing temperature. The **ML15KSPV** compressor capacity will continue to be controlled based upon the Condensing Temperature (CTS). The unit capacity will be controlled in the variable capacity mode throughout the range of capacity from minimum capacity to maximum capacity. If the Y2 demand remains after 30 minutes, the **ML15KSPV** control will begin to adjust the target refrigerant temperature (condensing for heating) to enable the compressor to reach its maximum speed. The maximum value for CTS can reach up to 131°F (55°C).

The **ML15KSPV** unit will cycle off once the thermostat demand is satisfied.

NOTE: The unit will time the first 30 minutes when power is cycled and this 30 minutes will not be included in the 30 minute timer for Y2 active.

Start Up

⚠ CAUTION

If unit is equipped with a crankcase heater, it should be energized 24 hours before unit start-up to prevent compressor damage as a result of slugging.

1. Rotate fan to check for frozen bearings or binding.
2. Inspect all factory and field-installed wiring for loose connections.
3. After evacuation is complete, open liquid line and suction line service valves to release refrigerant charge (contained in outdoor unit) into system.
4. Replace the stem caps and secure finger tight, then tighten an additional 1/6 of a turn.
5. Check voltage supply at the disconnect switch. The voltage must be within the range listed on the unit nameplate. If not, do not start equipment until the power company has been consulted and the voltage condition corrected.
6. Set thermostat for cooling demand, turn on power to indoor blower, and close the outdoor unit disconnect switch to start the unit.
7. Recheck unit voltage with unit running. Power must be within range shown on unit nameplate.

Charging

⚠ CAUTION

Excessive amounts of liquid refrigerant entering the suction line can damage the compressor. When adding refrigerant, precautions must be taken to control the flow of liquid into the system. This can be done by using a liquid vaporizing adapter or manual control using a sight glass as indicator.

Verify the unit is electrically grounded before charging the system. Extreme care shall be taken not to overfill the refrigerating system.

Charge should be checked and adjusted using information outlined in this section and in the tables provided on the charging label on the unit's control access panel.

R454B is a zeotropic blend of two refrigerants. At any given refrigerant pressure, R454B will have two saturation temperatures, a saturated liquid temperature and a saturated vapor temperature. See R454B Refrigerant Pressure Temperature Chart for saturation temperatures.

R454B Units must be charged with liquid refrigerant. Follow conventional charging procedures when charging the system. The technician is required to mark the total charge of the installed system on the unit nameplate, which includes the nameplate charge (factory charge) and additional charge that is added to the system at the time of installation.

The R454B refrigerant cylinders are provided with a ¼" LH flare connection, therefore a ¼" LH female flare adapter will be required. Connect manifold gauges and hoses following conventional charging procedures. Position the R454B refrigerant cylinder to deliver liquid refrigerant.

ML15KSPV unit is factory-charged with enough R454B refrigerant to accommodate a 15-foot length of refrigerant piping. For line lengths over 15 feet, add 2.75 oz of refrigerant for every 5 feet of piping beyond 15 feet. Add the required additional charge for the specific ML15KSPV and indoor unit match shown on the Unit Charging Label on page 34-35.

Initiate a call for cooling using the charge mode (DIP SW1 1, 2, 3, 4 shown on page 33). Allow the refrigerant pressures and temperatures to stabilize. Adjust the charge to using the subcooling method. The unit charging label provides the target Subcooling Values. Record the liquid line temperature. Measure the liquid line pressure and use the value to determine the Saturated Liquid Temperature. Calculate subcooling by subtracting the liquid line temperature from the Saturated liquid temperature.

Subcooling = Saturated Liquid Temperature – Liquid Line Temperature

Compare the results with the unit charging label.

Once system charging has been completed, the additional charge and total charge must be marked on the unit nameplate. Total Charge = Factory Charge + Additional charge. The total charge is marked on the space adjacent to "Total Charge". See nameplate below.

Detailed information is given in the ML15KSPV Installation and Service Procedures manual, which is available on LennoxPros.com.

Refrigerant

Refrigerant (refrigerant)/ Factory Charge (Charge d'usine) Charge Added (Charge accrue) Total Charge (Charge total)	R454B/ 1950g(69oz) ( )g( )oz ( )g( )oz
Design Pressure (Hi-Lo) / Pression de calcul (Haute-Bassee)	3.50-1.20MPa (508-174psig)

⚠ IMPORTANT!

System charging should be performed with the unit in charge mode. The unit can be operated in charge mode by using the SW1 switch 1, 2, 3, 4 charge mode DIP switch shown on page 33.

Table 13. Refrigerant Charge per Line Set Length

LIQUID LINE DIA.	OUNCES PER 5 FEET (G PER 1.5 M) ADJUST FROM 15 FEET (4.6 M) LINE SET*
3/8" (9.5 MM)	2.75 OUNCES PER 5' (85 G PER 1.5 M)

*If line length is greater than 15 ft. (4.6 m), add this amount. If line length is less than 15 ft. (4.6 m), subtract this amount.

NOTE – Insulate liquid line when it is routed through areas where the surrounding ambient temperature could become higher than the temperature of the liquid line or when pressure drop is equal to or greater than 20 psig.

⚠ IMPORTANT

Mineral oils are not compatible with R-454B. If oil must be added, it must be a Polyolester oil (POE).

NOTE: Both airflow and refrigerant charge must be monitored for proper system set-up. It may be necessary to alternately check and adjust the airflow and the refrigerant charge.

If the system is void of refrigerant, or if the outdoor ambient temperature is cool, use the weigh-in method to charge the unit. Do this after any leaks have been repaired.

1. Recover the refrigerant from the unit.
2. Conduct a leak check, then evacuate as previously outlined.
3. Weigh in the charge according to the total amount shown on the unit nameplate.

If weighing facilities are not available or if unit is being charged during warm weather, use one of the following procedures.

- **For systems using a TXV on the indoor evaporator and outdoor temperature above 60°F (15.5°C)** – charge in cooling mode using the subcooling method and table provided on the unit access panel.
- **For systems below 60°F (15.5°C)** – charge in heating mode using the subcooling method and table provided on the unit access panel. Attach low pressure gauge hose to auxiliary service port to access suction side in heating mode.

  NOTE: All unit table values are based on 70 to 80°F (21.1 to 26.7°C) indoor return air temperature for cooling mode, and 65°F to 75°F (18.3 to 23.9°C) return air temperature for heat mode.

High Pressure Switch

This unit is equipped with a high pressure switch which is located on the liquid line. The SPST, normally closed pressure switch opens when liquid line pressure rises above the factory setting of 590 +/- 15 psig (4068 +/- 103 kpa) and automatically resets at 418 +/- 15 psig (2882 +/- 103 kpa)

Torque Requirements

When servicing or repairing HVAC components, ensure the fasteners are appropriately tightened. **Table 14** shows torque values for fasteners.

Table 14. Torque Table

Fastener	Torque
Valve Stems	4 in. lbs. (0.45 N.m)
Stem Caps	8 ft. lbs. (10.85 N.m)
Service Port Caps (Plastic)	Finger tighten Plastic Caps with O-Rings
Sheet Metal Screws	16 in. lbs. (1.81 N.m)
#8 Machine Screws	16 in. lbs. (1.81 N.m)
#10 Machine Screws	28 in. lbs. (3.16 N.m)
Compressor Bolts	90 in. lbs. (10.17 Nm)

Liquid and Suction Line Service Valves

The liquid line and suction line service valves (see **Figure 22**) and service ports are used for leak testing, evacuation, charging, and checking charge.

Each valve is equipped with a service port which has a factory-installed Schrader valve. A service port cap protects the Schrader valve from contamination and serves as the primary leak seal.

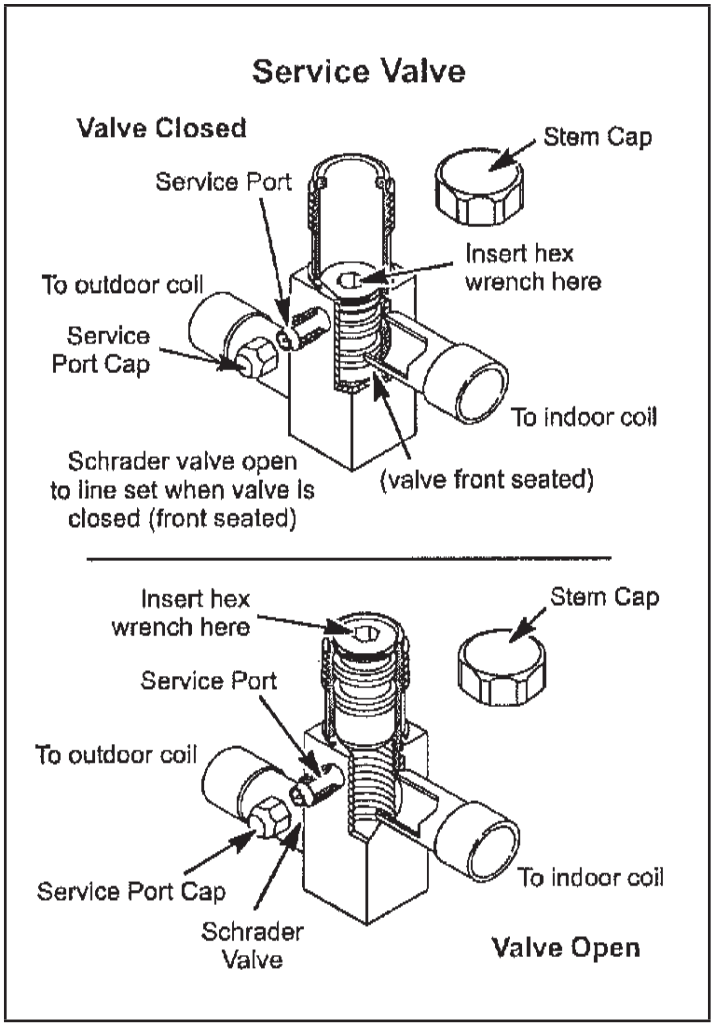

Figure 22. Service Valve

To Access the Schrader Port:

1. Remove the service port cap with an adjustable wrench.
2. Connect gauge to the service port.
3. When testing is completed, replace service port cap. Tighten finger tight, then an additional 1/6 turn.

0926
508844-01

To Open Liquid or Suction Line Service Valve:

1. Remove stem cap with an adjustable wrench.
2. Use service wrench with a hex-head extension to back the stem out counterclockwise as far as it will go. Use a 3/16” hex head extension for liquid line service valves and a 5/16” extension for suction line service valves.
3. Replace the stem cap. Tighten finger tight, then tighten an additional 1/6 turn.

To Close Liquid or Suction Line Service Valve:

1. Remove the stem cap with an adjustable wrench.
2. Use a service wrench with a hex-head extension to turn the stem clockwise to seat the valve. Tighten firmly.
3. Replace the stem cap. Tighten finger tight, then tighten an additional 1/6 turn.

Suction Line (Ball Type) Service Valve

Suction line (ball type) service valves function the same way as the other valves; the difference is in the construction (see **Figure 23**).

The ball valve is equipped with a service port with a factory-installed Schrader valve. A service port cap protects the Schrader valve from contamination and serves as the primary seal.

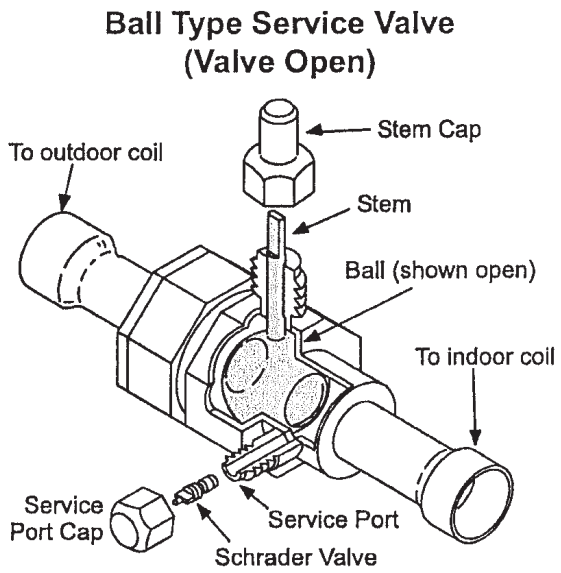

Use adjustable wrench. To open, rotate stem counterclockwise 1/4 turn (90°). To close, rotate stem clockwise 1/4 turn (90°).

Figure 23. Ball Type Service Valve

Maintenance

Regular Maintenance Requirements

Your system should be regularly inspected by a qualified service technician. These regular visits may include (among other things) checks for:

- Motor operation
- Ductwork air leaks
- Coil & drain pan cleanliness (indoor & outdoor)
- Electrical component operation & wiring check
- Proper refrigerant level & refrigerant leaks
- Proper airflow
- Drainage of condensate
- Air filter(s) performance
- Blower wheel alignment, balance & cleaning
- Primary & secondary drain line cleanliness
- Proper defrost operation (heat pumps)

Air Filter

Inspect air filters at least monthly and replace or clean as required. Disposable filters should be replaced. Washable filters may be cleaned by soaking in mild detergent and rinsing with cold water. Allow filter to dry before reinstalling. Replace filters with the arrows pointing in the direction of airflow. Dirty filters are the most common cause of poor heating / cooling performance and compressor failures.

Indoor Coil

If the system has been operated with a clean filter in place, it should require minimal cleaning. If cleaning is needed, call your dealer for service.

Condensate Drain

During cooling season check at least monthly for free flow of drainage and clean if necessary.

Condenser Coils

Grass cuttings, leaves, dirt, dust, lint from clothes dryers, and foliage from trees can be drawn into coils by movement of the air. Clogged condenser coils will lower the efficiency of your unit and could cause damage to the condenser.

Periodically, debris should be brushed from the condenser coils. Use a soft bristle brush with light pressure only. DO NOT damage or bend condenser coil fins. Damaged or bent fins may affect unit operation.

⚠ WARNING

SHARP OBJECT HAZARD!

Condenser coils have sharp edges. Wear adequate body protection on body extremities (e.g. gloves).

FAILURE TO FOLLOW THIS WARNING COULD RESULT IN BODILY INJURY.

0926
508844-01

Painted Surfaces

For maximum protection of the unit's finish, a good grade of automobile wax should be applied every year. In geographical areas where water has a high concentration of minerals (calcium, iron, sulfur, etc.), it is recommended that lawn sprinklers not be allowed to spray the unit. In such applications, the sprinklers should be directed away from the unit. Failure to follow this precaution may result in premature deterioration of the unit finish and metal components.

In sea coast areas, special maintenance is required due to the corrosive atmosphere provided by the high salt concentration in ocean mists and the air. Periodic washing of all exposed surfaces and coil will add life to your unit. Please consult your installing dealer for proper procedures in your geographic area.

Homeowner Information

⚠ WARNING

ELECTRICAL SHOCK HAZARD!

Turn OFF electric power to unit before performing any maintenance or removing panels or doors.

FAILURE TO DO SO COULD RESULT IN BODILY INJURY OR DEATH.

Heat Pump Operation

Your new heat pump has several characteristics that you should be aware of:

- Heat pumps satisfy heating demand by delivering large amounts of warm air into the living space. This is quite different from gas-or oil-fired furnaces or an electric furnace which deliver lower volumes of considerably hotter air to heat the space.
- Do not be alarmed if you notice frost on the outdoor coil in the winter months. Frost may develop on the outdoor coil during the heating cycle when temperatures are below 45°F (7.22°C). An electronic control activates a defrost cycle lasting 5 to 15 minutes at preset intervals to clear the outdoor coil of the frost.
- During the defrost cycle, you may notice steam rising from the outdoor unit. This is a normal occurrence. The thermostat may engage auxiliary heat during the defrost cycle to satisfy a heating demand; however, the unit will run to normal operation at the conclusion of the defrost cycle.

In case of extended power outage...

If the outdoor temperature is below 50°F (10°C) and power to your outdoor unit has been interrupted for one hour or longer, observe the following when restoring power to your heat pump system.

- Set the room thermostat selector to the "Emergency Heat" setting to obtain temporary heat for a minimum of 6 hours. This will allow system refrigerant pressures and temperatures enough time to return to a stabilized condition.
- In Emergency Heat mode, all heating demand is satisfied by auxiliary heat; heat pump operation is locked out. After a 6 hour "warm-up" period, the thermostat can then be switched to the "Heat" setting and normal heat pump operation may resume.

Thermostat Operation

The wall-mounted thermostat controls your heat pump. The thermostat is available in various configurations from different manufacturers. The information below is typical for most thermostats. Ask your dealer for specific information regarding the model of thermostat installed.

Fan Switch

In AUTO or INT (intermittent) mode, the blower operates only when the thermostat calls for heating or cooling. This mode is generally preferred when humidity control is a priority.

The ON or CONT mode provides continuous indoor blower operation, regardless of whether the compressor or auxiliary heat are operating. This mode is required when constant air circulation or filtering is desired.

On models without a fan selection switch, the fan will cycle with the outdoor unit.

System Switch

Set the system switch for heating, cooling or auto operation. The auto mode allows the heat pump to automatically switch from heating mode to cooling mode to maintain predetermined comfort settings. Many heat pump thermostats are also equipped with an emergency heat mode which locks out heat pump operation and provides temporary heat supplied by the auxiliary heat.

Emergency Heat Indication

Most heat pump thermostats indicate when the heat pump system is operating in the emergency heat mode.

Temperature Indicator

The temperature indicator displays the actual room temperature.

Programmable Thermostats

Your system may be controlled by a programmable thermostat. These thermostats provide the added feature of programmable time-of-day set points for both heating and cooling. Refer to the user's information manual provided with your particular thermostat for operation details.

Important System Information

- Your system should never be operated without a clean air filter properly installed.
- Return air and supply air registers should be free from restrictions or obstructions to allow full flow of air.

IF YOUR SYSTEM DOES NOT WORK, BEFORE REQUESTING A SERVICE CALL:

1. Ensure thermostat is set below (cooling) or above (heating) room temperature and that the system lever is in the “COOL”, “HEAT” or “AUTO” position.
2. Inspect your return air filter: If it is dirty, your heat pump may not function properly.
3. Check indoor and outdoor disconnect switches. Confirm circuit breakers are ON or that fuses have not blown. Reset breakers/replace fuses as necessary.
4. Inspect the outdoor unit for clogged condenser coils, (grass cuttings, leaves, dirt, dust or lint). Ensure that branches, twigs or other debris are not obstructing the condenser fan.

IF YOUR SYSTEM STILL DOES NOT OPERATE, CONTACT YOUR SERVICING DEALER.

Be sure to describe the problem, and have the model and serial numbers of the equipment available.

If warranty replacement parts are required, the warranty must be processed through your servicing dealer.

0926
508844-01

Start-Up and Performance Checklist

Customer: _____ Address: _____

Indoor Unit Model: _____ Serial: _____

Outdoor Unit Model: _____ Serial: _____

Notes: _____

Start-Up Checks

Refrigerant Type: _____

Rated Load Amps: _____ Actual Amps: _____ Rated Volts: _____ Actual Volts: _____

Condenser Fan Full Load Amps: _____ Actual Amps: _____

Cooling Mode

Suction Pressure: _____ Liquid Pressure: _____

Supply Air Temperature: _____ Ambient Temperature: _____ Return Air Temperature: _____

System Refrigerant Charge (Refer to manufacturer's information on unit or installation instructions for required subcooling temperatures.)

Subcooling: A - B = Subcooling

Saturated Liquid Temperature (A)

minus Liquid Line Temperature (B)

Indoor Coil Temperature Drop (18 to 22°F): A - B = Coil Temp Drop

Return Air Temperature (A)

minus Supply Air Temperature (B)

PFAS

0926
508844-01