©2025 Lennox Industries Inc.
Dallas, Texas, USA

THIS MANUAL MUST BE LEFT WITH THE HOMEOWNER FOR FUTURE REFERENCE

⚠ WARNING

Improper installation, adjustment, alteration, service or maintenance can cause property damage, personal injury or loss of life. Installation and service must be performed by a licensed professional HVAC installer or equivalent, or service agency.

⚠ WARNING

To prevent serious injury or death:

1. Lock-out/tag-out before performing maintenance.
2. If system power is required (e.g., smoke detector maintenance), disable power to blower, remove fan belt where applicable, and ensure all controllers and thermostats are set to the "OFF" position before performing maintenance.
3. Always keep hands, hair, clothing, jewelry, tools, etc. away from moving parts.

IMPORTANT: Special procedures are required for cleaning the all-aluminum coil in this unit. See page 20 in this instruction for information.

INSTALLATION INSTRUCTIONS

Merit® Series ML16KP2 Units

HEAT PUMP
508818-01
03/2026

General

This ML16KP2 outdoor heat pump **with all-aluminum coil** is designed for use with R454B refrigerant only. This unit must be installed with an approved indoor air handler or coil. For AHRI Certified system match-ups and expanded ratings, visit www.LennoxPros.com. These instructions are intended as a general guide and do not supersede local codes in any way. Consult authorities having jurisdiction before installation.

NOTICE!

Charging information is given on the charging procedure sticker on the unit access panel. For more in-depth information, consult the Installation and Service Procedures manual, available on LennoxPros.com or through the Technical Support department at 800-453-6669.

⚠ CAUTION

As with any mechanical equipment, contact with sharp sheet metal edges can result in personal injury. Take care while handling this equipment and wear gloves and protective clothing.

***NOTE** – This unit ML16KP2 is a PARTIAL UNIT AIR CONDITIONER, complying with PARTIAL UNIT requirements of this Standard, and must only be connected to other units that have been confirmed as complying to corresponding PARTIAL UNIT requirements of this Standard, UL 60335-2-40/CSA C22.2 No. 60335-2-40, or UL 1995/CSA C22.2 No 236.*

0326
508818-01

STEP 1 – SETTING THE UNIT – Clearances

SINGLE-UNIT INSTALLATION

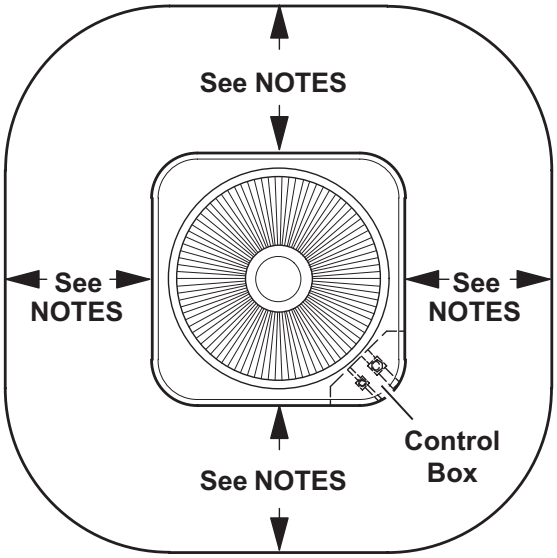

Single-Unit Installation Notes:

- Service Clearance - 24 in. (610 mm) on one of the sides adjacent to the Control Box.
- One of other three sides must be 36 in. (914 mm).
- One of the two remaining sides may be 12 in. (305 mm).
- The remaining side may be 6 in. (152 mm).
- 48 in. (1219 mm) clearance required on top of unit.

MULTI-UNIT INSTALLATIONS

Single Row

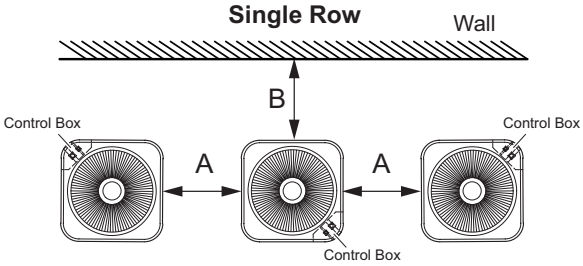

Required Minimum Clearances	A	B
	12 in. (305 mm) [18 in. (457 mm) recommended]	12 in. (305 mm)

Multiple Rows

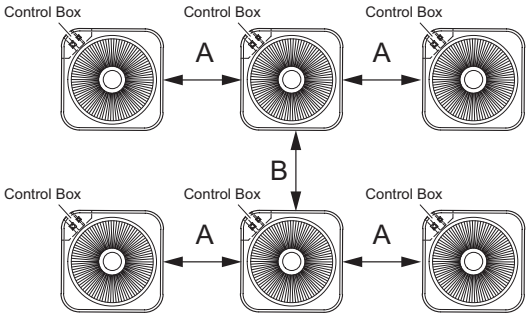

Required Minimum Clearances	A	B
	12 in. (305 mm) [18 in. (457 mm) recommended]	24 in. (610 mm)

Multi-Unit Installation Notes:

- Recommended service clearance of 24 in. (610 mm) on one side.
- 48 in. (1219 mm) clearance required on top of the unit.

⚠ WARNING

- Do not use means to accelerate the defrosting process or to clean, other than those recommended by the manufacturer.
- The appliance shall be stored in a room without continuously operating ignition sources (for example: open flames, an operating gas appliance, or an operating electric heater).
- Do not pierce or burn.
- Be aware that refrigerants may not contain an odor.

⚠ CAUTION

Servicing shall be performed only as recommended by the manufacturer.

⚠ WARNING

Ducts connected to an appliance shall not contain a potential ignition source

⚠ WARNING

Every working procedure that affects safety means shall only be carried out by competent persons. This appliance is not to be used by persons (including children) with reduced physical, sensory or mental capabilities, or lack of experience and knowledge, unless they have been given supervision or instruction concerning use of the appliance by a person responsible for their safety. Children should be supervised to ensure they do not play with the appliance.

⚠ IMPORTANT

Ensure that the area is in the open or that it is adequately ventilated before breaking into the system or conducting any hot work. A degree of ventilation shall continue during the period that the work is carried out.

⚠ IMPORTANT

Verify cabling will not be subject to wear, corrosion, excessive pressure, vibration, sharp edges or any other adverse environmental effects.

⚠ IMPORTANT

Pipe work, including piping material, pipe routing, and installation shall include protection from physical damage in operation and service, and be in compliance with national and local codes and standards, such as ASHRAE 15, ASHRAE 15.2, UL 207, IAPMO Uniform Mechanical Code, ICC International Mechanical Code, or CSA B52. All field joints shall be accessible for inspection prior to being covered or enclosed.

⚠ CAUTION

Under no circumstances shall potential sources of ignition be used in the searching for or detection of refrigerant leaks. A halide torch (or any other detector using a naked flame) shall not be used.

The following leak detection methods are deemed acceptable for all refrigerant systems.

Electronic leak detectors may be used to detect refrigerant leaks but, in the case of flammable refrigerants, the sensitivity may not be adequate, or may need re-calibration. (Detection equipment shall be calibrated in a refrigerant-free area.) Ensure that the detector is not a potential source of ignition and is suitable for the refrigerant used. Leak detection equipment shall be set at a percentage of the LFL of the refrigerant and shall be calibrated to the refrigerant employed, and the appropriate percentage of gas (25 % maximum) is confirmed. Leak detection fluids are also suitable for use with most refrigerants but the use of detergents containing chlorine shall be avoided as the chlorine may react with the refrigerant and corrode the copper pipe-work. If a leak is suspected, all naked flames shall be removed/extinguished. If a leakage of refrigerant is found which requires brazing, all of the refrigerant shall be recovered from the system, or isolated (by means of shut off valves) in a part of the system remote from the leak.

⚠ CAUTION

Some soaps used for leak detection are corrosive to certain metals. Carefully rinse piping thoroughly after leak test has been completed. Do not use matches, candles, flame or other sources of ignition to check for gas leaks.

⚠ WARNING

PARTIAL UNITS shall only be connected to an appliance suitable for the same refrigerant.

⚠ IMPORTANT

When breaking into the refrigerant circuit to make repairs – or for any other purpose – conventional procedures shall be used. However, for flammable refrigerants it is important that best practice be followed and, since flammability is a consideration, procedures such as safely remove refrigerant following local and national regulations, purging the circuit with inert gas, evacuating (optional for A2L), purging with inert gas (optional for A2L), or opening the circuit by cutting or brazing be adhered to. The refrigerant charge shall be recovered into the correct recovery cylinders if venting is not allowed by local and national codes. For appliances containing flammable refrigerants, the system shall be purged with oxygen-free nitrogen to render the appliance safe for flammable refrigerants.

This process might need to be repeated several times. Compressed air or oxygen shall not be used for purging refrigerant systems. For appliances containing flammable refrigerants, refrigerants purging shall be achieved by breaking the vacuum in the system with oxygen-free nitrogen and continuing to fill until the working pressure is achieved, then venting to atmosphere, and finally pulling down to a vacuum (optional for A2L). This process shall be repeated until no refrigerant is within the system (optional for A2L). When the final oxygen-free nitrogen charge is used, the system shall be vented down to atmospheric pressure to enable work to take place. Ensure that the outlet for the vacuum pump is not close to any potential ignition sources and that ventilation is available.

⚠ IMPORTANT

In addition to conventional charging procedures, the following requirements shall be followed.

- Ensure that contamination of different refrigerants does not occur when using charging equipment. Hoses or lines shall be as short as possible to minimize the amount of refrigerant contained in them.
- Cylinders shall be kept in an appropriate position according to the instructions.
- Ensure that the REFRIGERATING SYSTEM is earthed prior to charging the system with refrigerant.
- Label the system when charging is complete (if not already).
- Extreme care shall be taken not to overfill the REFRIGERATING SYSTEM.

Prior to recharging the system, it shall be pressure-tested with the appropriate purging gas. The system shall be leak tested on completion of charging, but prior to commissioning. A follow up leak test shall be carried out prior to leaving the site.

⚠ IMPORTANT

When removing refrigerant from a system, either for servicing or decommissioning, it is recommended good practice that all refrigerants are removed safely.

When transferring refrigerant into cylinders, ensure that only appropriate refrigerant recovery cylinders are employed. Ensure that the correct number of cylinders for holding the total system charge is available. All cylinders to be used are designated for the recovered refrigerant and labelled for that refrigerant (i. e. special cylinders for the recovery of refrigerant). Cylinders shall be complete with pressure-relief valve and associated shut-off valves in good working order. Empty recovery cylinders are evacuated and, if possible, cooled before recovery occurs.

The recovery equipment shall be in good working order with a set of instructions concerning the equipment that is at hand and shall be suitable for the recovery of all appropriate refrigerants including, when applicable, flammable refrigerants. In addition, a set of calibrated weighing scales shall be available and in good working order. Hoses shall be complete with leak-free disconnect couplings and in good condition. Before using the recovery machine, check that it is in satisfactory working order, has been properly maintained and that any associated electrical components are sealed to prevent ignition in the event of a refrigerant release. Consult manufacturer if in doubt.

The recovered refrigerant shall be returned to the refrigerant supplier in the correct recovery cylinder, and the relevant waste transfer note arranged. Do not mix refrigerants in recovery units and especially not in cylinders.

If compressors or compressor oils are to be removed, ensure that they have been evacuated to an acceptable level to make certain that flammable refrigerant does not remain within the lubricant. The evacuation process shall be carried out prior to returning the compressor to the suppliers. Only electric heating to the compressor body shall be employed to accelerate this process. When oil is drained from a system, it shall be carried out safely.

⚠ IMPORTANT

After completion of field piping for split systems, the field pipework shall be pressure tested with an inert gas and then vacuum tested prior to refrigerant charging, according to the following requirements;

– Field-made refrigerant joints indoors shall be tightness tested. The test method shall have a sensitivity of .2 oz. per year of refrigerant or better, under pressure.

No leak shall be detected.

NOTE *– R-454b is a A2L refrigerant. The system installation must meet the following parameters based upon total refrigerant charge (line set included). TAmin (Total minimum conditioned area)is the minimum allowable conditioned area based upon the total system charge at sea level. Values must be multiplied by altitude adjustment factor at installed altitude.*

Qmin table refers to minimum airflow requirements during refrigerant leak mitigation by the refrigerant detection system, based upon total system charge.

See tables below.

TAmin Table

Charge (lb)	10.0	15.0	20.0	25.0	30.0
Charge (kg)	4.5	6.8	9.1	11.3	13.6
Minimum Conditioned Area (ft2)	149.9	224.9	299.9	374.8	449.8
Minimum Conditioned Area (m2)	13.9	20.9	27.9	34.8	41.8

NOTE *– Multiply values in TAmin table by the Altitude Adjustment Factors to correct TAmin based on installed altitude.*

Altitude Adjustment Factor

Altitude (m)	0	200	400	600	800	1000	1200	1400	1600
Altitude (ft)	0	660	1310	1970	2620	3280	3940	4590	5250
Adj. Factor	1	1	1	1	1.02	1.05	1.04	1.1	1.12
Altitude (m)	1600	1800	2000	2200	2400	2600	2800	3000	3200
Altitude (ft)	5250	5910	6560	7220	7870	8530	9190	9840	10500
Adj. Factor	1.12	1.15	1.18	1.21	1.25	1.28	1.32	1.36	1.4

Qmin Table

Refrigerant Charge lb (kg)	CFM Required	Refrigerant Charge lb (kg)	CFM Required
5 (2.3)	135	18 (8.1)	487
6 (2.7)	162	19 (8.6)	514
7 (3.2)	189	20 (9.1)	541
8 (3.6)	216	21 (9.5)	568
9 (4.1)	244	22 (10)	595
10 (4.5)	271	23 (10.4)	622
11 (5)	298	24 (10.9)	649
12 (5.4)	325	25 (11.3)	676
13 (5.9)	352	26 (11.7)	704
14 (6.4)	379	27 (12.2)	731
15 (6.8)	406	28 (12.7)	758
16 (7.3)	433	29 (13.2)	785
17 (7.7)	460	30 (13.6)	812

NOTE *– Qmin minimum airfow requirement for refrigerant leak mitigation.*

UNIT DIMENSIONS - INCHES (MM)

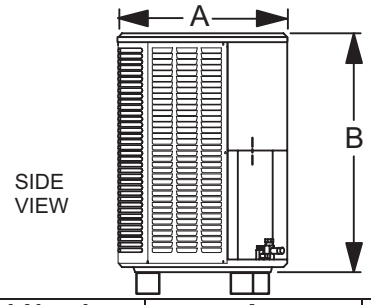

Model Number	A	B
ML16KP2-024-230	28-1/4 (718)	43-1/4 (1099)
ML16KP2-036-230	32-1/4 (819)	32-1/4 (819)
ML16KP2-048-230	32-1/4 (819)	37-1/4 (946)
ML16KP2-060-230	32-1/4 (819)	48-1/4 (1226)

FIGURE 1. Unit Dimensions

STEP 1 – SETTING THE UNIT (Continued) – Unit Placement

NOTICE!

Roof Damage!

This system contains both refrigerant and oil. Some rubber roofing material may absorb oil, causing the rubber to degrade. Failure to follow this notice could result in damage to roof surface.

⚠ IMPORTANT

This unit must be matched with an indoor coil as specified with AHRI. For AHRI Certified system match-ups and expanded ratings, visit www.LennoxPros.com.

⚠ WARNING

To prevent personal injury, as well as damage to panels, unit or structure, observe the following:

While installing or servicing this unit, carefully stow all removed panels so that the panels will not cause injury to personnel, objects or nearby structures. Also, take care to store panels where they will not be subject to damage (e.g., being bent or scratched).

While handling or stowing the panels, consider any weather conditions (especially wind) that may cause panels to be blown around and damaged.

⚠ IMPORTANT

The Clean Air Act of 1990 bans the intentional venting of refrigerant (CFCs, HCFCs and HFCs) as of July 1, 1992. Approved methods of recovery, recycling or reclaiming must be followed. Fines and/or incarceration may be levied for noncompliance.

⚠ IMPORTANT

Exhaust vents from dryers, water heaters and furnaces should be directed away from the outdoor unit. Prolonged exposure to exhaust gases and the chemicals contained within them may cause condensation to form on the steel cabinet and other metal components of the outdoor unit. This will diminish unit performance and longevity

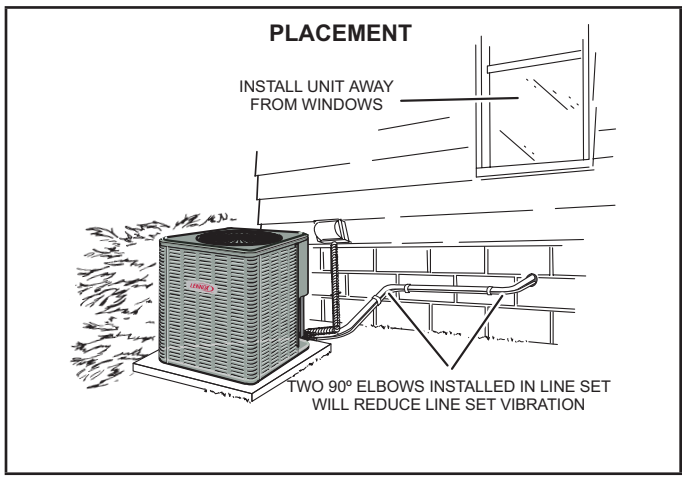

FIGURE 2

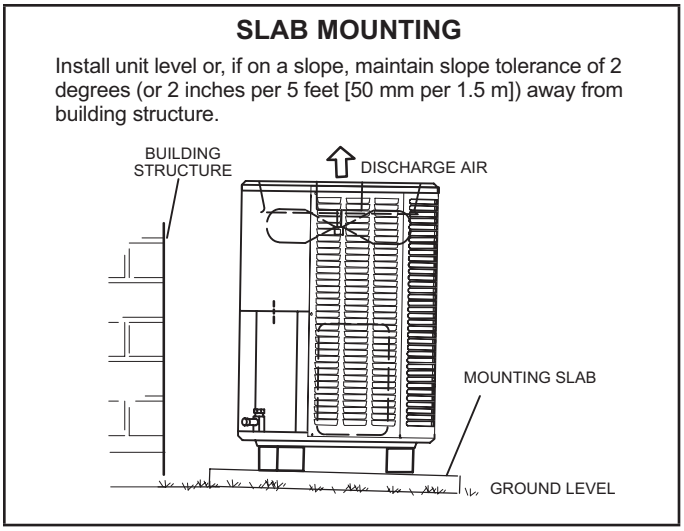

FIGURE 3

⚠ IMPORTANT

This model is designed for use in check / expansion valve systems only. An indoor expansion valve approved for use with R-454B refrigerant must be ordered separately and installed prior to operating the system.

***NOTE** - An optional Unit Stand-Off Kit (94J45) is available for this unit. Black high-density polyethylene feet raise unit off of mounting surface away from damaging moisture. Four feet are furnished per order number.*

The maximum altitude of use is 10,000 ft (3048 m). The maximum ambient operating temperature for the ML16KP2-060-230A01 is 120ºF.

This unit is a partial unit heat pump, complying with partial unit requirements of this international standard, and must be only connected to other units that have been confirmed as complying to corresponding partial unit requirements of this international standard.

STEP 2 – REFRIGERANT PIPING

⚠ IMPORTANT

If this unit is being matched with an approved line set that was previously charged with mineral oil, the line set must be flushed prior to installation. Take care to empty all existing traps. Polyolester (POE) oils are used in Lennox units charged with R-454B refrigerant. Residual mineral oil can act as an insulator, preventing proper heat transfer. It can also clog the expansion device and reduce system performance and capacity. Failure to properly flush the system per this instruction and the detailed Installation and Service Procedures manual will void the warranty.

Flush the existing line set per the following instructions. For more information, refer to the Installation and Service Procedures manual available on LennoxPros.com. CAUTION - DO NOT attempt to flush and re-use existing line sets or indoor coil when the system contains contaminants (i.e., compressor burn out).

If a new line set is being installed, size the piping per table 1.

TABLE 1
REFRIGERANT LINE SETS - INCHES (MM)

Model	Valve Size Connections		Recommended Line Sets	
	Liquid Line	Suction Line	Liquid x Suction OD | Insulation Thickness | Length	Order No.
-024	3/8” (10 mm)	3/4” (19 mm)	3/8 x 3/4 | 3/8 | 20 ft. (6 m)	89J56
			3/8 x 3/4 | 3/8 | 30 ft. (9 m)	89J57
			3/8 x 3/4 | 3/8 | 50 ft. (15.2 m)	89J59
-036 -048	3/8” (10 mm)	7/8” (22 mm)	3/8 x 7/8 | 3/8 | 30 ft. (9 m)	89J60
			3/8 x 7/8 | 3/8 | 50 ft. (15.2 m)	89J62
-060	3/8” (10 mm)	1-1/8” (29 mm)	3/8 x 1-1/8 | 3/8 | 50 ft. (15.2 m)	73P91

* Some applications may require a field-provided 1-1/8” to 7/8” adapter.

Line Set Joints – Furnace Application

Evaporator primary line set joints in all applications shall have a line set joint sleeve.

Evaporator primary line sets should not have additional joints not covered by line set joint sleeve.

If additional joints are present, the system installation shall comply with one of the options below:

Option 1 - Furnace is installed as a direct vent appliance;

Option 2 - Furnace/Evaporator installation is in a space greater than the minimum conditioned area (Amin);

Option 3 - Furnace/Evaporator installation is connected to a space greater than the minimum conditioned area (Amin) through an opening of at least 15 in² (4-inch diameter hole equivalent) located below the level of the furnace burners;

Option 4 - Have a second refrigerant detection sensor installed below the level of the burners (see Secondary Sensor Installation section).

Multiple Systems Installed in Same Space

For any A2L refrigerant system with additional joints not covered by line set joint sleeves, each system in the same space must have refrigerant detection sensor installed below the level of the burners (see Secondary Sensor Installation section). If all the systems in the same space are installed with direct vent application, then additional refrigerant detection sensor is not needed

Secondary Sensor Installation

If secondary refrigerant sensor is required, it shall be mounted as follows:

Upflow Applications: Mounted on an unused side furnace return air connection at least 9 inches above the floor and within 9 inches from front of furnace.

Downflow Applications: Mounted on one side of the evaporator coil 9 inches above the floor and within 9 inches from front of coil.

Horizontal Applications: Mounted on the bottom side return furnace air connection within 9 inches of both the blower deck and front of furnace.

Connect the refrigerant sensor to the second sensor input on the RDS Control. Refer to the instructions provided with the sensor or the RDS controller to enable the second sensor.

***NOTE** - When installing refrigerant lines longer than 50 feet, refer to the Refrigerant Piping Design and Fabrication Guidelines manual available on LennoxPros.com (Corp. 9351-L9), or contact the Technical Support Department Product Application group for assistance.*

***NOTE** - For new or replacement line set installation, refer to Service and Application Note - Corp. 9112-L4 (C-91-4).*

⚠ WARNING

When using a high pressure gas such as nitrogen to pressurize a refrigeration or air conditioning system, use a regulator that can control the pressure down to 1 or 2 psig (6.9 to 13.8 kPa).

⚠ WARNING

Refrigerant can be harmful if it is inhaled. Refrigerant must be used and recovered responsibly.

Failure to follow this warning may result in personal injury or death.

⚠ WARNING

Fire, Explosion and Personal Safety hazard. Failure to follow this warning could result in damage, personal injury or death.

Never use oxygen to pressurize or purge refrigeration lines. Oxygen, when exposed to a spark or open flame, can cause fire and/or an explosion, that could result in property damage, personal injury or death.

⚠ WARNING

Polyolester (POE) oils used with R-454B refrigerant absorb moisture very quickly. It is very important that the refrigerant system be kept closed as much as possible. DO NOT remove line set caps or service valve stub caps until you are ready to make connections.

⚠ IMPORTANT

Braze-free fittings must conform with UL207 or ISO14903 (latest edition).

LINE SET

IMPORTANT — Refrigerant lines must not contact structure.

INSTALLATION

Line Set Isolation - The following illustrations are examples of proper refrigerant line set isolation:

REFRIGERANT LINE SET — TRANSITION FROM VERTICAL TO HORIZONTAL

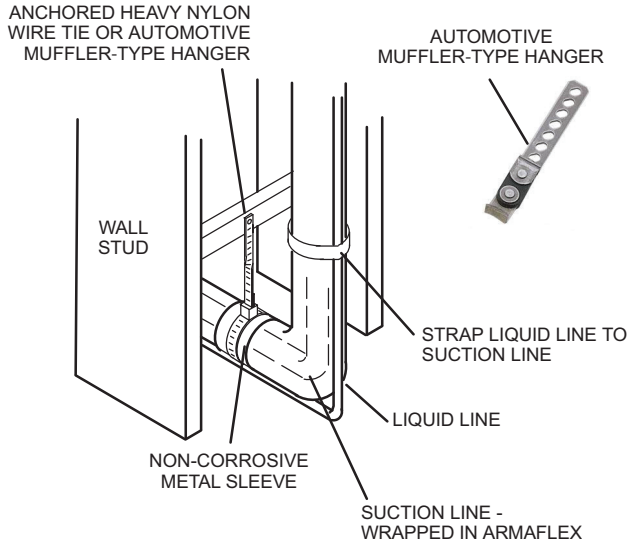

REFRIGERANT LINE SET — INSTALLING HORIZONTAL RUNS

To hang line set from joist or rafter, use either metal strapping material or anchored heavy nylon wire ties.

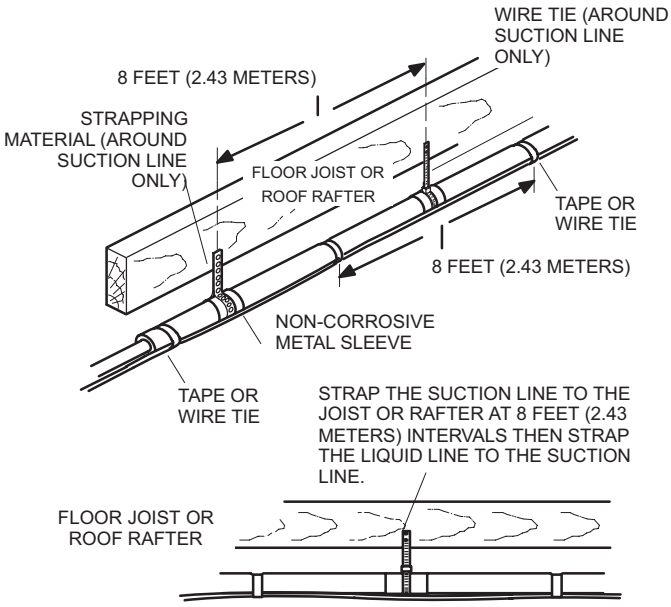

REFRIGERANT LINE SET — INSTALLING VERTICAL RUNS (NEW CONSTRUCTION SHOWN)

***NOTE** - Insulate liquid line when it is routed through areas where the surrounding ambient temperature could become higher than the temperature of the liquid line or when pressure drop is equal to or greater than 20 psig.*

IMPORTANT - Refrigerant lines must not contact wall

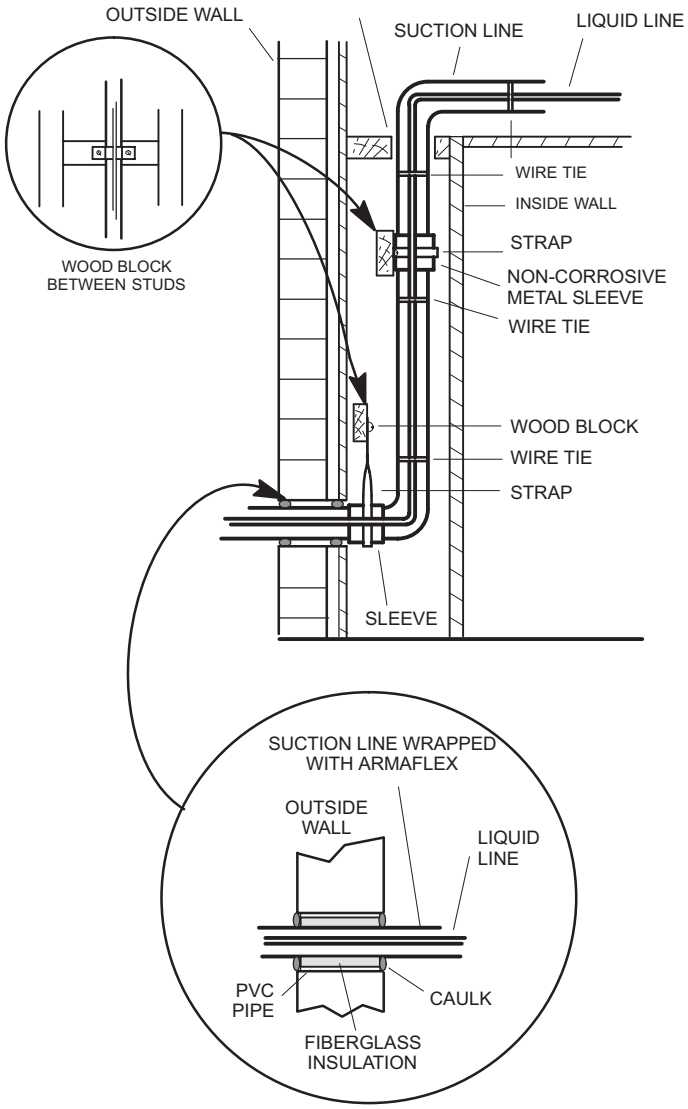

***NOTE** - Similar installation practices should be used if line set is to be installed on exterior of outside wall.*

FIGURE 4

1A TYPICAL EXISTING FIXED ORIFICE REMOVAL PROCEDURE (UNCASED COIL SHOWN)

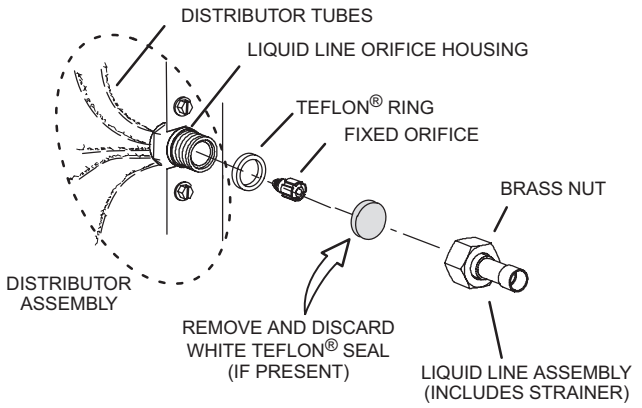

A - On fully cased coils, remove the coil access and plumbing panels.

B - Remove any shipping clamps from the liquid line and distributor assembly.

C - Using two wrenches, disconnect liquid line from liquid line orifice housing. Take care not to twist or damage distributor tubes during this process.

D - Remove and discard fixed orifice, valve stem assembly (if present) and Teflon® washer as illustrated above.

E - Use a field-provided fitting to temporarily reconnect the liquid line to the indoor unit's liquid line orifice housing.

OR

1B TYPICAL EXISTING EXPANSION VALVE REMOVAL PROCEDURE (UNCASED COIL SHOWN)

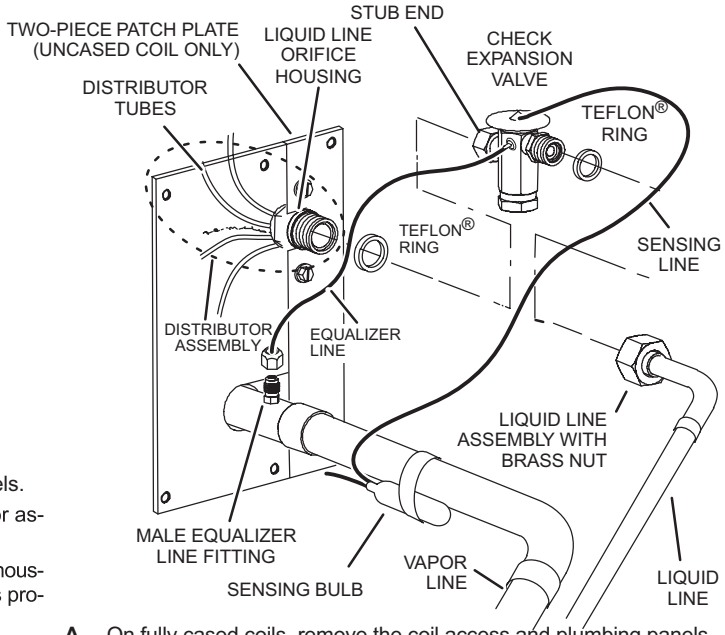

A - On fully cased coils, remove the coil access and plumbing panels.

B - Remove any shipping clamps from the liquid line and distributor assembly.

C - Disconnect the equalizer line from the check expansion valve equalizer line fitting on the vapor line.

D - Remove the vapor line sensing bulb.

E - Disconnect the liquid line from the check expansion valve at the liquid line assembly.

F - Disconnect the check expansion valve from the liquid line orifice housing. Take care not to twist or damage distributor tubes during this process.

G - Remove and discard check expansion valve and the two Teflon® rings.

H - Use a field-provided fitting to temporarily reconnect the liquid line to the indoor unit's liquid line orifice housing.

2 CONNECT GAUGES AND EQUIPMENT FOR FLUSHING PROCEDURE

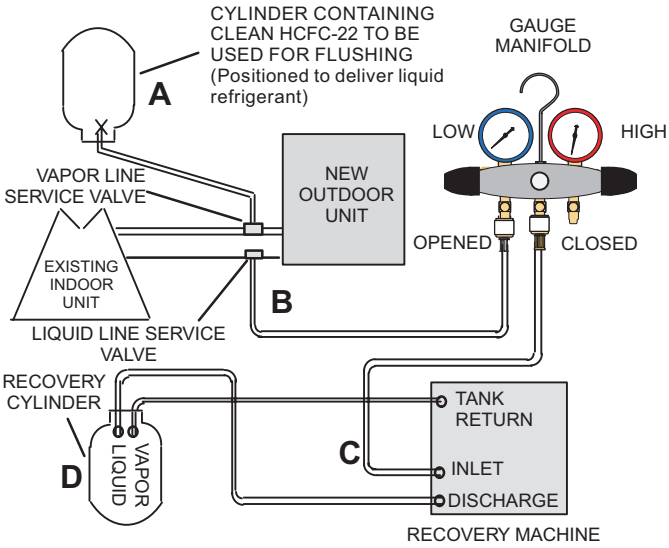

A - HCFC-22 cylinder with clean refrigerant (positioned to deliver liquid refrigerant) to the vapor service valve.

B - HCFC-22 gauge set (low side) to the liquid line valve.

C - HCFC-22 gauge set center port to inlet on the recovery machine with an empty recovery tank connected to the gauge set.

D - Connect recovery tank to recovery machine per machine instructions.

3 FLUSHING LINE SET

The line set and indoor unit coil must be flushed with at least the same amount of clean refrigerant that previously charged the system. Check the charge in the flushing cylinder before proceeding.

A - Set the recovery machine for liquid recovery and start the recovery machine. Open the gauge set valves to allow the recovery machine to pull a vacuum on the existing system line set and indoor unit coil.

B - Position the cylinder of clean HCFC-22 for delivery of liquid refrigerant and open its valve to allow liquid refrigerant to flow into the system through the vapor line valve. Allow the refrigerant to pass from the cylinder and through the line set and the indoor unit coil before it enters the recovery machine.

C - After all of the liquid refrigerant has been recovered, switch the recovery machine to vapor recovery so that all of the HCFC-22 vapor is recovered. Allow the recovery machine to pull the system down to 0.

D - Close the valve on the inverted HCFC-22 drum and the gauge set valves. Pump the remaining refrigerant out of the recovery machine and turn the machine off.

FIGURE 5

STEP 2 – REFRIGERANT PIPING – Brazing Procedures

1 CUT AND DEBUR

Cut ends of the refrigerant lines square (free from nicks or dents) and debur the ends. The pipe must remain round. Do not crimp end of the line.

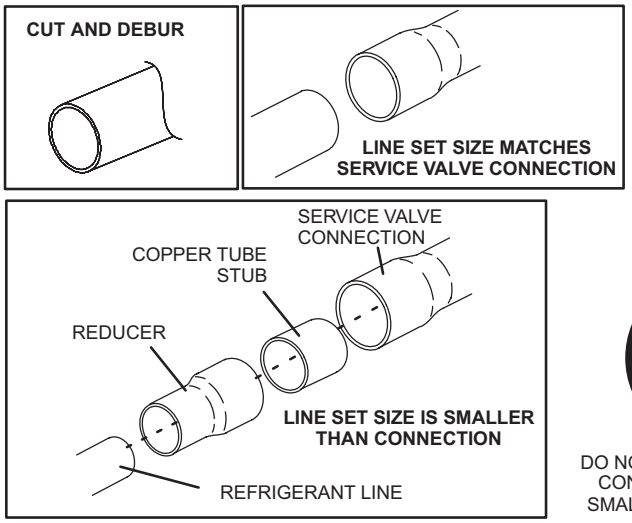

2 CAP AND CORE REMOVAL

Remove service cap and core from both the vapor and liquid line service ports.

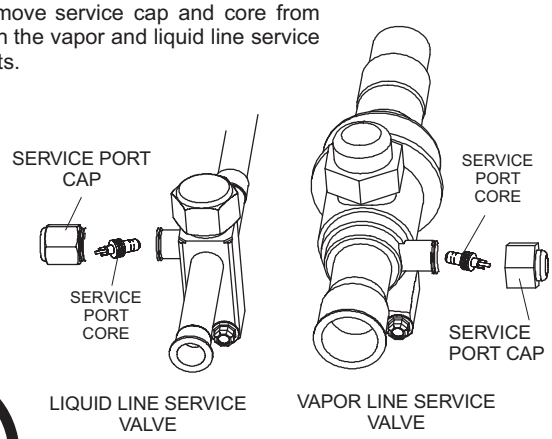

DO NOT CRIMP SERVICE VALVE CONNECTOR WHEN PIPE IS SMALLER THAN CONNECTION

3 ATTACH THE MANIFOLD GAUGE SET FOR BRAZING LIQUID AND VAPOR LINE SERVICE VALVES

Flow regulated nitrogen (at 1 to 2 psig) through the low-side refrigeration gauge set into the liquid line service port valve, and out of the vapor line service port valve.

A - Connect gauge set low pressure side to liquid line service valve (service port).

B - Connect gauge set center port to bottle of nitrogen with regulator.

C - Remove core from valve in vapor line service port to allow nitrogen to escape.

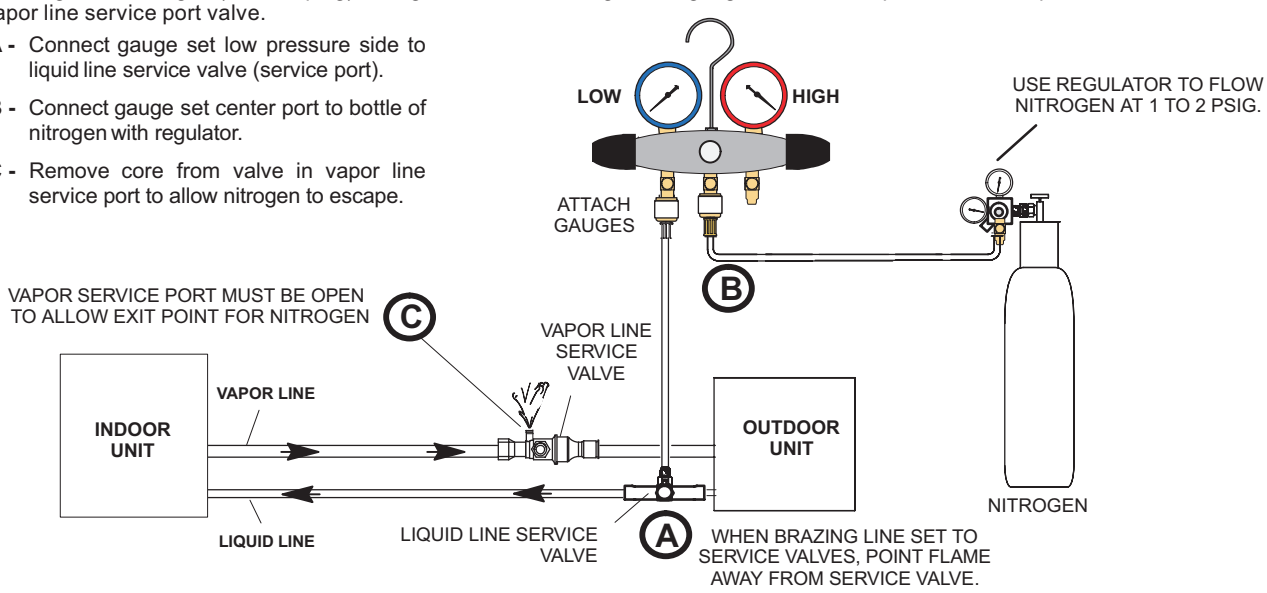

FIGURE 6

⚠ CAUTION

Brazing alloys and flux contain materials which are hazardous to your health.

Avoid breathing vapors or fumes from brazing operations. Perform operations only in well-ventilated areas.

Wear gloves and protective goggles or face shield to protect against burns.

Wash hands with soap and water after handling brazing alloys and flux.

⚠ WARNING

Danger of fire. Bleeding the refrigerant charge from only the high side may result in pressurization of the low side shell and suction tubing. Application of a brazing torch to a pressurized system may result in ignition of the refrigerant and oil mixture. Check the high and low pressures before applying heat.

4 WRAP SERVICE VALVES

To help protect service valve seals during brazing, wrap water-saturated cloths around service valve bodies and copper tube stubs. Use additional water-saturated cloths underneath the valve body to protect the base paint.

5 FLOW NITROGEN

Flow regulated nitrogen (at 1 to 2 psig) through the refrigeration gauge set into the valve stem port connection on the liquid service valve and out of the vapor valve stem port. See steps **3A, 3B** and **3C** on manifold gauge set connections.

6 BRAZE LINE SET

Wrap both service valves with water-saturated cloths as illustrated here and as mentioned in step 4, before brazing to line set. Cloths must remain water-saturated throughout the brazing and cool-down process.

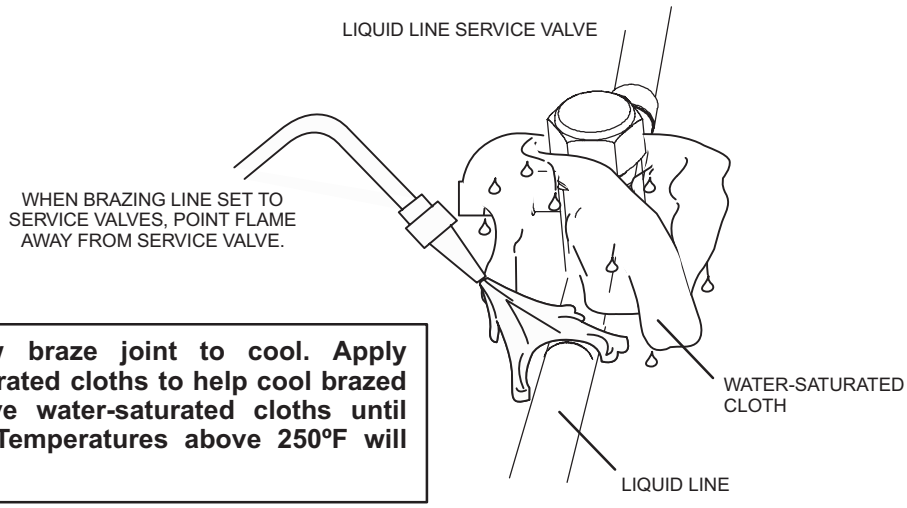

IMPORTANT — Allow braze joint to cool. Apply additional water-saturated cloths to help cool brazed joint. Do not remove water-saturated cloths until piping has cooled. Temperatures above 250ºF will damage valve seals.

WARNING

FIRE, PERSONAL INJURY, OR PROPERTY DAMAGE may result if you do not wrap a water-saturated cloth around both liquid and suction line service valve bodies and copper tube stub while brazing the line set! The braze, when complete, must be quenched with water to absorb any residual heat.

Do not open service valves until refrigerant lines and indoor coil have been leak-tested and evacuated. Refer to Installation and Service Procedures manual found on LennoxPros.com.

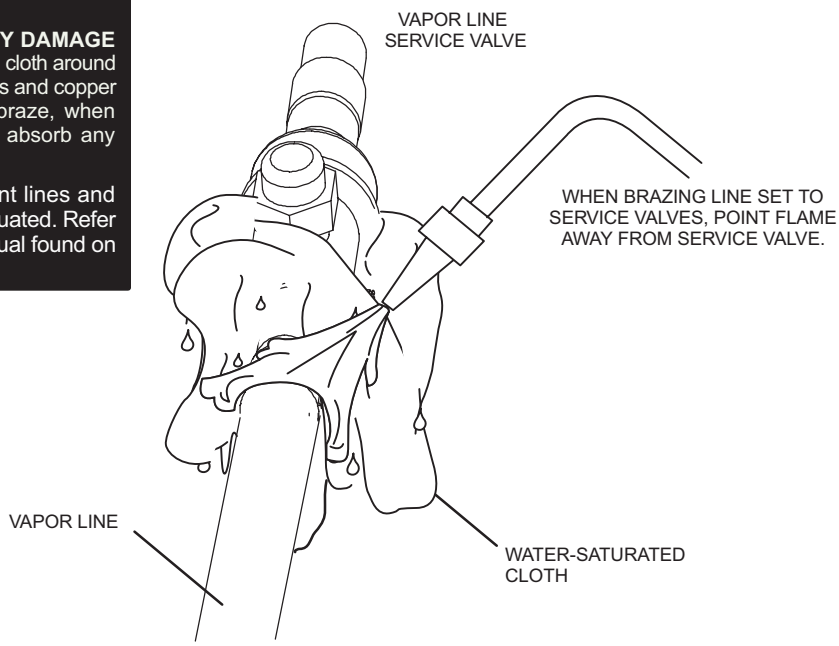

7 PREPARATION FOR NEXT STEP

After all connections have been brazed, disconnect manifold gauge set from service ports. Apply additional water-saturated cloths to both services valves to cool piping. Once piping is cool, remove all water-saturated cloths.

FIGURE 7

STEP 2 – REFRIGERANT PIPING – Install Indoor Expansion Valve

This outdoor unit is designed for use in systems that include an expansion valve metering device (purchased separately) at the indoor coil. See the ML16KP2 Product Specifications bulletin (EHB) for approved expansion valve kit match-ups and application information. The check expansion valve unit must be installed inside the cabinet. In applications where an uncased coil is being installed in a field-provided plenum, install the check/expansion valve in a manner that will provide access for future field service of the expansion valve. Refer to below illustration for reference during installation of expansion valve unit.

INDOOR EXPANSION VALVE INSTALLATION

(Uncased Coil Shown)

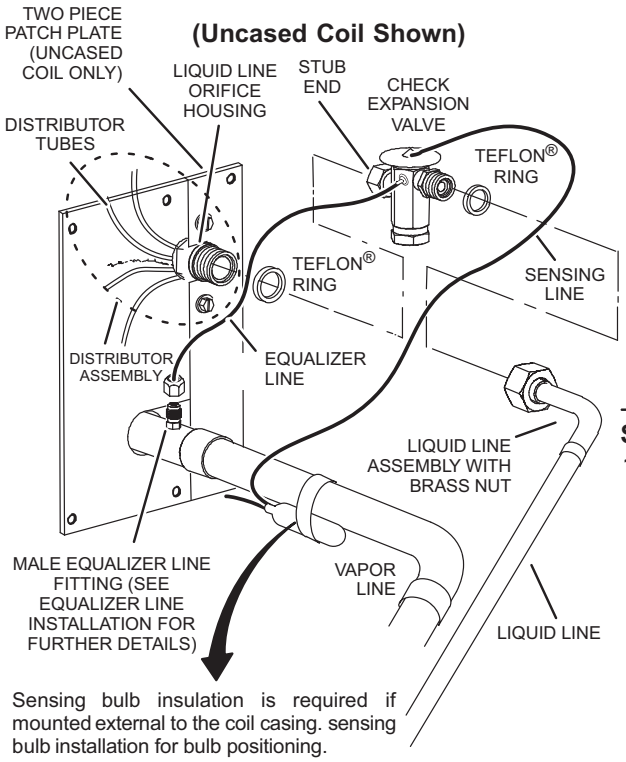

Sensing bulb insulation is required if mounted external to the coil casing. sensing bulb installation for bulb positioning.

EQUALIZER LINE INSTALLATION

1 - Remove and discard either the flare seal cap or flare nut with copper flare seal bonnet from the equalizer line port on the vapor line as illustrated in the figure below.

2 - Remove the field-provided fitting that temporarily reconnected the liquid line to the indoor unit's distributor assembly.

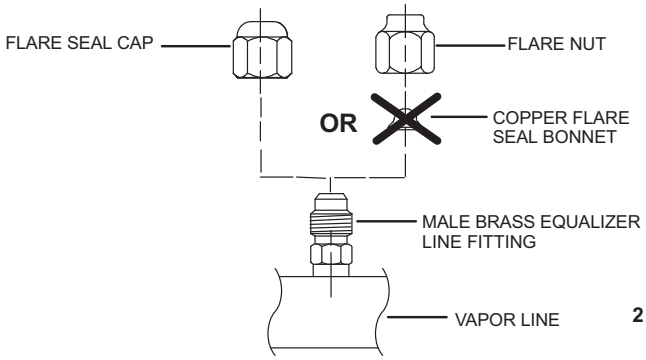

3 - Install one of the provided Teflon® rings around the stubbed end of the check expansion valve and lightly lubricate the connector threads and expose surface of the Teflon® ring with refrigerant oil.

4 - Attach the stubbed end of the check expansion valve to the liquid line orifice housing. Finger tighten and use an appropriately sized wrench to turn an additional 1/2 turn clockwise as illustrated in the figure above, or tighten to 20 ft-lb.

5 - Place the remaining Teflon® washer around the other end of the check expansion valve. Lightly lubricate connector threads and expose surface of the Teflon® ring with refrigerant oil.

6 - Attach the liquid line assembly to the check expansion valve. Finger tighten and use an appropriately sized wrench to turn an additional 1/2 turn clockwise as illustrated in the figure above or tighten to 20 ft-lb.

1/2 Turn

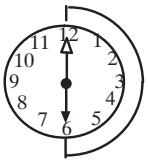

SENSING BULB INSTALLATION

1 - Attach the vapor line sensing bulb in the proper orientation as illustrated below using the clamp and screws provided.

ON LINES SMALLER THAN 3/4", MOUNT SENSING BULB AT EITHER THE 1 OR 11 O'CLOCK POSITION.

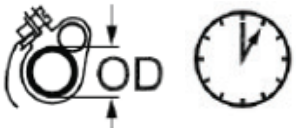

ON 3/4" AND LARGER LINES, MOUNT SENSING BULB AT EITHER THE 3 OR 9 O'CLOCK POSITION.

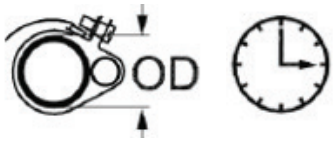

***NOTE -** NEVER MOUNT THE SENSING BULB ON BOTTOM OF LINE.*

***NOTE** - Though it is preferred to have the sensing bulb installed on a horizontal run of the vapor line, installation on a vertical run of piping is acceptable if necessary. See figure to right for proper bulb orientation on vertical run of piping.*

***NOTE** - Confirm proper thermal contact between vapor line and check/expansion bulb before insulating the sensing bulb once installed.*

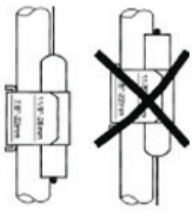

2 - Connect the equalizer line from the check expansion valve to the equalizer vapor port on the vapor line. Finger tighten the flare nut plus 1/8 turn (7 ft-lbs) as illustrated to the right.

1/8 Turn

FIGURE 8

STEP 3 – LEAK TEST AND EVACUATION

LEAK TEST

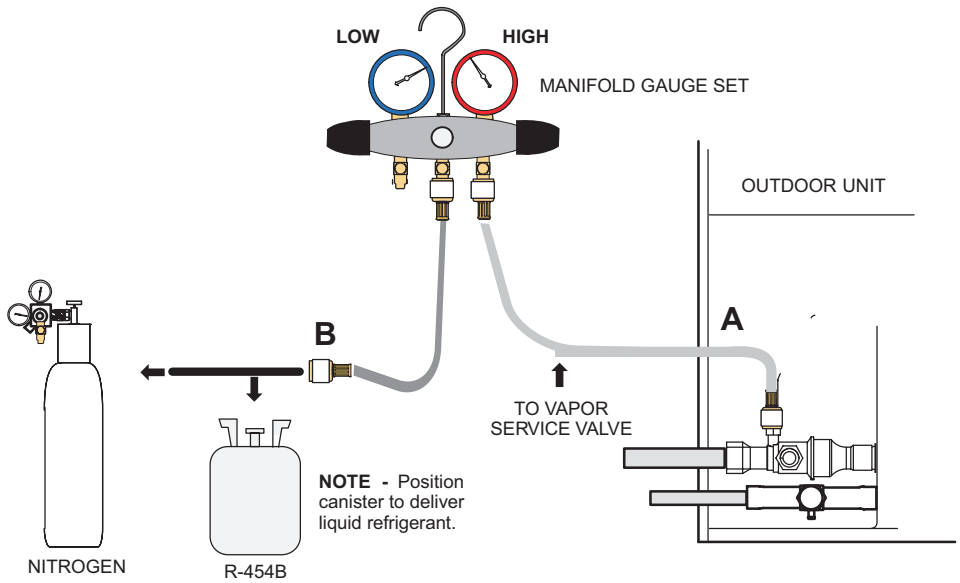

1 CONNECT GAUGE SET

A - Connect the high pressure hose of an R-454B manifold gauge set to the vapor valve service port.

NOTE *- Normally, the high pressure hose is connected to the liquid line port. However, connecting it to the vapor port better protects the manifold gauge set from high pressure damage.*

B - With both manifold valves closed, connect the cylinder of R-454B refrigerant to the center port of the manifold gauge set.

NOTE *- Later in the procedure, the R-454B container will be replaced by the nitrogen container.*

2 TEST FOR LEAKS

After the line set has been connected to the indoor and outdoor units, check the line set connections and indoor unit for leaks. Use the following procedure to test for leaks:

A - With both manifold valves closed, connect the cylinder of R-454B refrigerant to the center port of the manifold gauge set. Open the valve on the R-454B cylinder (vapor only).

B - Open the high pressure side of the manifold to allow R-454B into the line set and indoor unit. Weigh in a trace amount of R-454B. *[A trace amount is a maximum of two ounces (57 g) refrigerant or three pounds (31 kPa) pressure.]* Close the valve on the R-454B cylinder and the valve on the high pressure side of the manifold gauge set. Disconnect the R-454B cylinder.

C - Connect a cylinder of nitrogen with a pressure regulating valve to the center port of the manifold gauge set.

D - Adjust nitrogen pressure to 160 psig (1103 kPa). Open the valve on the high side of the manifold gauge set in order to pressurize the line set and the indoor unit.

E - After a few minutes, open one of the service valve ports and verify that the refrigerant added to the system earlier is measurable with a leak detector. Once leak detector is confirmed operational, leak check the entire system (field joints and line set included) to a sensitivity of 5 grams per year of refrigerant.

F - After leak testing, disconnect gauges from service ports.

FIGURE 9

EVACUATION

3 CONNECT GAUGE SET

***NOTE** - Remove cores from service valves (if not already done).*

A - Connect low side of manifold gauge set with 1/4 SAE in-line tee to *vapor* line service valve

B - Connect high side of manifold gauge set to *liquid* line service valve

C - Connect available micron gauge connector on the 1/4 SAE in-line tee.

D - Connect the vacuum pump (with vacuum gauge) to the center port of the manifold gauge set. The center port line will be used later for both the R-454B and nitrogen containers.

***NOTE -** Position canister to deliver liquid refrigerant.*

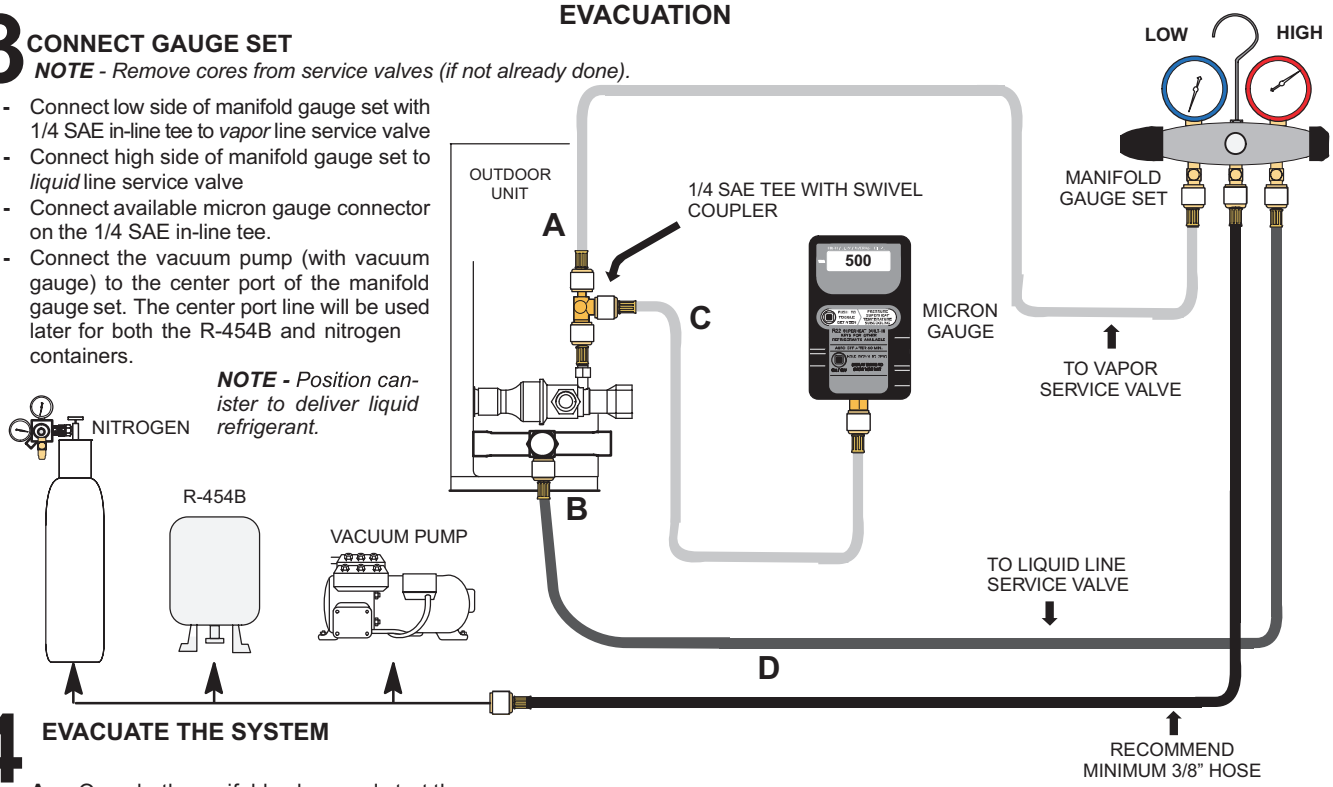

4 EVACUATE THE SYSTEM

A - Open both manifold valves and start the vacuum pump.

B - Evacuate the line set and indoor unit to an **absolute pressure** of 23,000 microns (29.01 inches of mercury).

***NOTE** - During the early stages of evacuation, it is desirable to close the manifold gauge valve at least once. A rapid rise in pressure indicates a relatively large leak. If this occurs, **repeat the leak testing procedure**.*

***NOTE** - The term **absolute pressure** means the total actual pressure above absolute zero within a given volume or system. Absolute pressure in a vacuum is equal to atmospheric pressure minus vacuum pressure.*

C - When the absolute pressure reaches 23,000 microns (29.01 inches of mercury), perform the following:

- Close manifold gauge valves.
- Close valve on vacuum pump.
- Turn off vacuum pump.
- Disconnect manifold gauge center port hose from vacuum pump.
- Attach manifold center port hose to a nitrogen cylinder with pressure regulator set to 160 psig (1103 kPa) and purge the hose.
- Open manifold gauge valves to break the vacuum in the line set and indoor unit.
- Close manifold gauge valves.

WARNING !

Possible equipment damage.

Avoid deep vacuum operation. Do not use compressors to evacuate a system. Extremely low vacuum can cause internal arcing and compressor failure. Damage caused by deep vacuum operation will void warranty.

D - Shut off the nitrogen cylinder and remove the manifold gauge hose from the cylinder. Open the manifold gauge valves to release the nitrogen from the line set and indoor unit.

E - Reconnect the manifold gauge to the vacuum pump, turn the pump on, and continue to evacuate the line set and indoor unit until the absolute pressure does not rise above 500 microns (29.9 inches of mercury) within a 20-minute period after shutting off the vacuum pump and closing the manifold gauge valves.

F - When the absolute pressure requirement above has been met, disconnect the manifold hose from the vacuum pump and connect it to a cylinder of R-454B positioned to deliver liquid refrigerant. Open the manifold gauge valve 1 to 2 psig in order to release the vacuum in the line set and indoor unit.

G - Perform the following:

- Close manifold gauge valves.
- Shut off R-454B cylinder.
- Reinstall service valve cores by removing manifold hose from service valve. Quickly install cores with core tool while maintaining a positive system pressure.
- Replace stem caps and finger tighten them, then tighten an additional one-sixth (1/6) of a turn as illustrated.

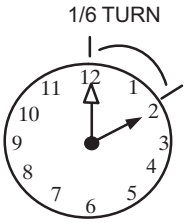

FIGURE 10

STEP 4 – ELECTRICAL – Circuit Sizing and Wire Routing

In the U.S.A., wiring must conform with current local codes and the current National Electric Code (NEC). In Canada, wiring must conform with current local codes and the current Canadian Electrical Code (CEC).

Refer to the furnace or air handler installation instructions for additional wiring application diagrams and refer to unit nameplate for minimum circuit ampacity and maximum overcurrent protection size.

24VAC TRANSFORMER

Use the transformer provided with the furnace or air handler for low-voltage control power (24VAC - 40 VA minimum)

REFRIGERANT DETECTION SYSTEM

Unit must be installed with Lennox Approved Refrigerant detection system (RDS) and sensor.

Do not operate system until refrigerant detection system is verified to be in good working order.

⚠ WARNING

Electric Shock Hazard. Can cause injury or death. Unit must be properly grounded in accordance with national and local codes.

Line voltage is present at all components when unit is not in operation on units with single-pole contactors. Disconnect all remote electric power supplies before opening access panel. Unit may have multiple power supplies.

⚠ WARNING

Fire Hazard. Use of aluminum wire with this product may result in a fire, causing property damage, severe injury or death. Use copper wire only with this product.

⚠ WARNING

Failure to use properly sized wiring and circuit breaker may result in property damage. Size wiring and circuit breaker(s) per Product Specifications bulletin (EHB) and unit rating plate.

⚠ WARNING

ELECTROSTATIC DISCHARGE (ESD) Precautions and Procedures	Electrostatic discharge can affect electronic components. Take care during unit installation and service to protect the unit's electronic controls. Precautions will help to avoid control exposure to electrostatic discharge by putting the unit, the control and the technician at the same electrostatic potential. Touch hand and all tools on an unpainted unit surface before performing any service procedure to neutralize electrostatic charge.

SIZE CIRCUIT AND INSTALL SERVICE DISCONNECT SWITCH

Refer to the unit nameplate for minimum circuit ampacity, and maximum fuse or circuit breaker (HACR per NEC). Install power wiring and properly sized disconnect switch.

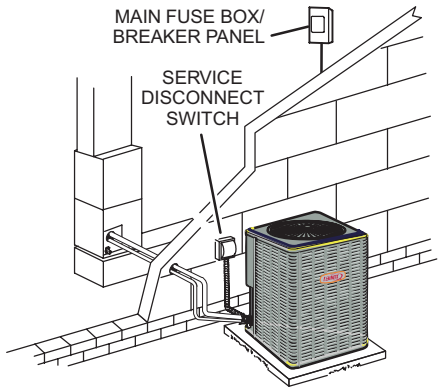

***NOTE** - Units are approved for use only with copper conductors. Ground unit at disconnect switch or connect to an earth ground.*

INSTALL THERMOSTAT

Install room thermostat (ordered separately) on an inside wall approximately in the center of the conditioned area and 5 feet (1.5m) from the floor. It should not be installed on an outside wall or where it can be affected by sunlight or drafts.

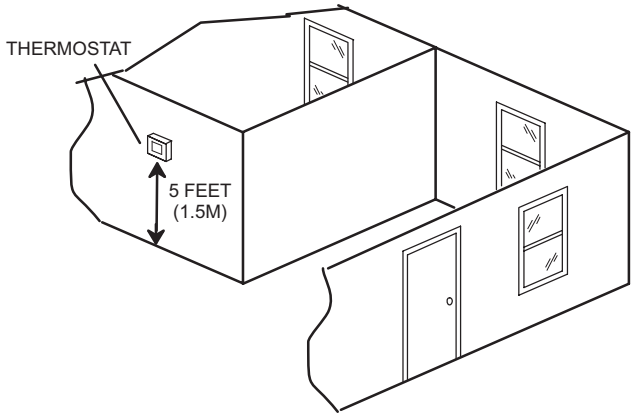

***NOTE** - 24VAC, Class II circuit connections are made in the control panel.*

FIGURE 11

STEP 4 – ELECTRICAL – (Continued) – High Voltage and Field Control Wiring

The following illustration provides an example of control wiring connections when using a standard thermostat.

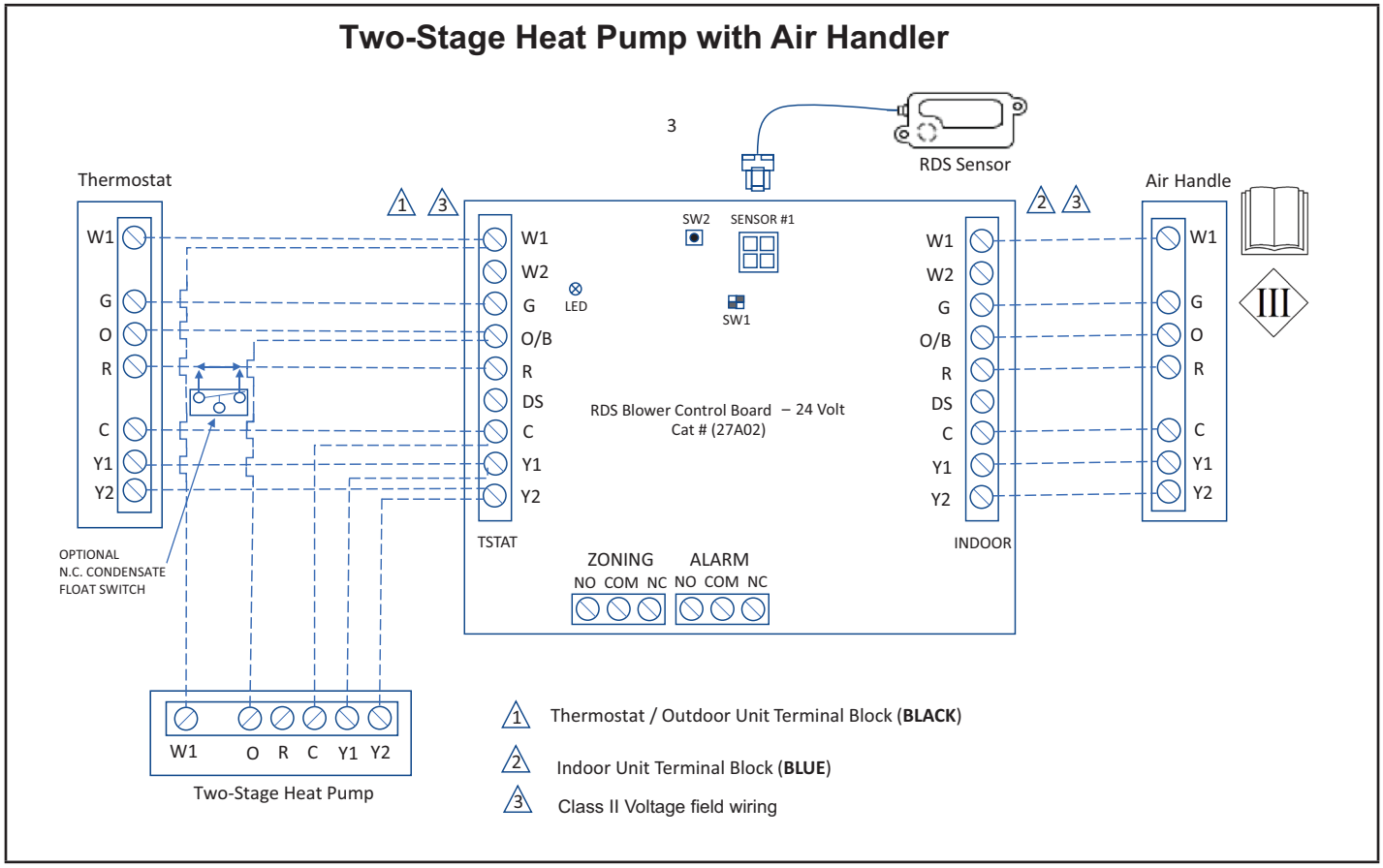

FIGURE 12

STEP 5 – UNIT START-UP

⚠ IMPORTANT

If unit is equipped with a crankcase heater, it should be energized 24 hours before unit start-up to prevent compressor damage as a result of slugging.

1 - Rotate fan to check for binding.

2 - Inspect all factory- and field-installed wiring for loose connections.

3 - After evacuation is complete, open the liquid line and vapor line service valve stems to release the refrigerant charge (contained in outdoor unit) into the system.

4 - Replace the stem caps and tighten to the value listed in table 2.

5 - Check voltage supply at the disconnect switch. The voltage must be within the range listed on the unit's nameplate. If not, do not start the equipment until you have consulted with the power company and the voltage condition has been corrected.

6 - Connect manifold gauge set for testing and charging.

7 - Set the thermostat for a cooling demand. Turn on power to the indoor unit and close the outdoor unit disconnect switch to start the unit.

8 - Recheck voltage while the unit is running. Power must be within range shown on the unit nameplate.

9 - Check system for sufficient refrigerant using the procedures outlined under *Checking Refrigerant Charge.*

OPERATING MANIFOLD GAUGE SET AND SERVICE VALVES

The liquid and vapor line service valves are used for removing refrigerant, flushing, leak testing, evacuating, checking charge and charging.

Each valve is equipped with a service port which has a factory-installed valve stem. Figures 13 and 14 provide information on how to access and operate both angle- and ball-type service valves.

Torque Requirements

When servicing or repairing heating, ventilating and air conditioning components, ensure the fasteners are appropriately tightened. Table 2 lists torque values for fasteners.

TABLE 2
TORQUE REQUIREMENTS

Parts	Recommended Torque	
Service valve cap	8 ft.-lb.	11 NM
Sheet-metal screws	16 in.-lb.	2 NM
Machine screws #10	28 in.-lb.	3 NM
Compressor bolts	90 in.-lb.	10 NM
Gauge port seal cap	8 ft.-lb.	11 NM

⚠ IMPORTANT

To prevent stripping of the various caps used, the appropriately sized wrench should be used and fitted snugly over the cap before tightening.

Using Manifold Gauge Set

When checking the system charge, only use a manifold gauge set that features low loss anti-blow back fittings.

Manifold gauge set used with R-454B refrigerant systems must be capable of handling the higher system operating pressures. The gauges should be rated for use with pressures of 0 - 800 psig on the high side and a low side of 30" vacuum to 250 psig with dampened speed to 500 psi. Gauge hoses must be rated for use at up to 800 psig of pressure with a 4000 psig burst rating.

OPERATING BALL-TYPE SERVICE VALVE

1 - Remove stem cap with an appropriately sized wrench.
2 - Use an appropriately sized wrench to open. To open valve, rotate stem counterclockwise 90°. To close, rotate stem clockwise 90°.

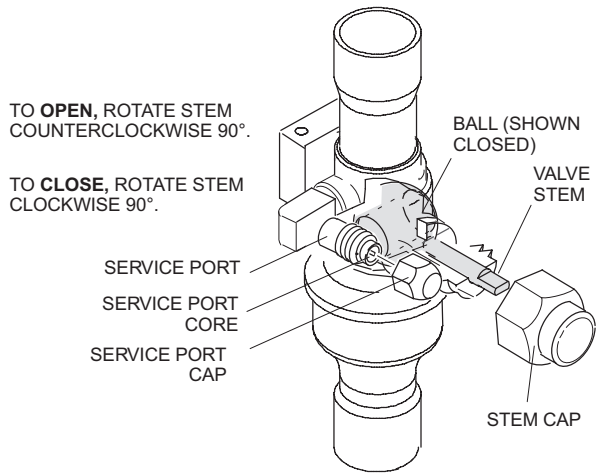

FIGURE 13

OPERATING ANGLE-TYPE SERVICE VALVE

1 - Remove stem cap with an appropriately sized wrench.
2 - Use a service wrench with a hex-head extension (3/16" for liquid line valve sizes and 5/16" for vapor line valve sizes) to back the stem out counterclockwise as far as it will go.

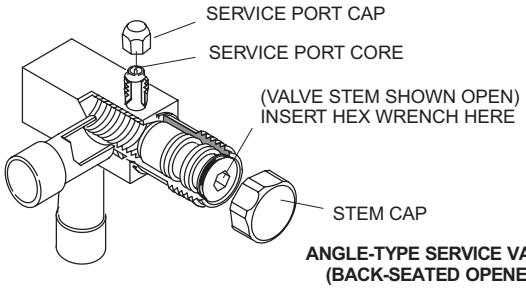

When service valve is **OPEN**, the service port is open to line set, indoor and outdoor unit.

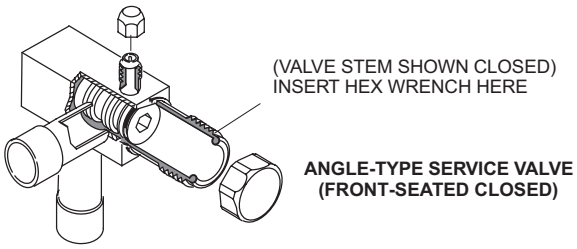

When service valve is **CLOSED**, the service port is open to the line set and indoor unit.

NOTE - *A label with specific torque requirements may be affixed to*

FIGURE 14. Operating Angle-Type Service Valve

ACCESS SERVICE PORT

A service port cap protects the service port core from contamination and serves as the primary leak seal.

1 - Remove service port cap with an appropriately sized wrench.
2 - Connect gauge set to service port.
3 - When testing is completed, replace service port cap and tighten as follows:
- With torque wrench, finger tighten and torque cap per table 2.
- Without torque wrench, finger tighten and use an appropriately sized wrench to turn an additional 1/6 turn clockwise.

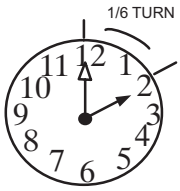

Reinstall Stem Cap

Stem cap protects the valve stem from damage and serves as the primary seal. Replace the stem cap and tighten as follows:

- With torque wrench, finger tighten and then torque cap per table 2.
- Without torque wrench, finger tighten and use an appropriately sized wrench to turn an additional 1/12 turn clockwise.

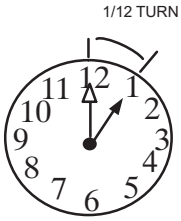

FIGURE 15

Charging

Verify the unit is electrically grounded before charging the system. Extreme care shall be taken not to overfill the refrigerating system.

Charge should be checked and adjusted using information outlined in this section and in the tables provided on the charging label on the unit's control access panel.

R454B is a zeotropic blend of two refrigerants. At any given refrigerant pressure, R454B will have two saturation temperatures, a saturated liquid temperature and a saturated vapor temperature. See R454B Refrigerant Pressure Temperature Chart in the installation and service manual for saturation temperatures.

R454B Units must be charged with liquid refrigerant. Follow conventional charging procedures when charging the system. The technician is required to mark the total charge of the installed system on the unit nameplate, which includes the nameplate charge (factory charge) and additional charge that is added to the system at the time of installation.

The R454B refrigerant cylinders are provided with a ¼" LH flare connection, therefore a ¼" LH female flare adapter will be required. Connect manifold gauges and hoses following conventional charging procedures. Position the R454B refrigerant cylinder to deliver liquid refrigerant.

ML16KP2 unit is factory charged with R454B. Refer to unit Charging Label for baseline line set length for factory unit charge and Additional Charge guidelines..

Initiate a call for cooling and allow the refrigerant pressures and temperatures to stabilize. Adjust the charge to using the subcooling method. The unit charging label provides the target Subcooling Values. Record the liquid line temperature. Measure the liquid line pressure and use the value to determine the Saturated Liquid Temperature. Calculate subcooling by subtracting the liquid line temperature from the Saturated liquid temperature.

Subcooling = Saturated Liquid Temperature – Liquid Line Temperature

Compare the results with the unit charging label.

Once system charging has been completed, the additional charge and total charge must be marked on the unit nameplate. Total Charge = Factory Charge + Additional charge. The total charge is marked on the space adjacent to "Total Charge". See nameplate below.

Detailed information is given in the ML16KP2 Installation and Service Procedures manual, which is available on LennoxPros.com.

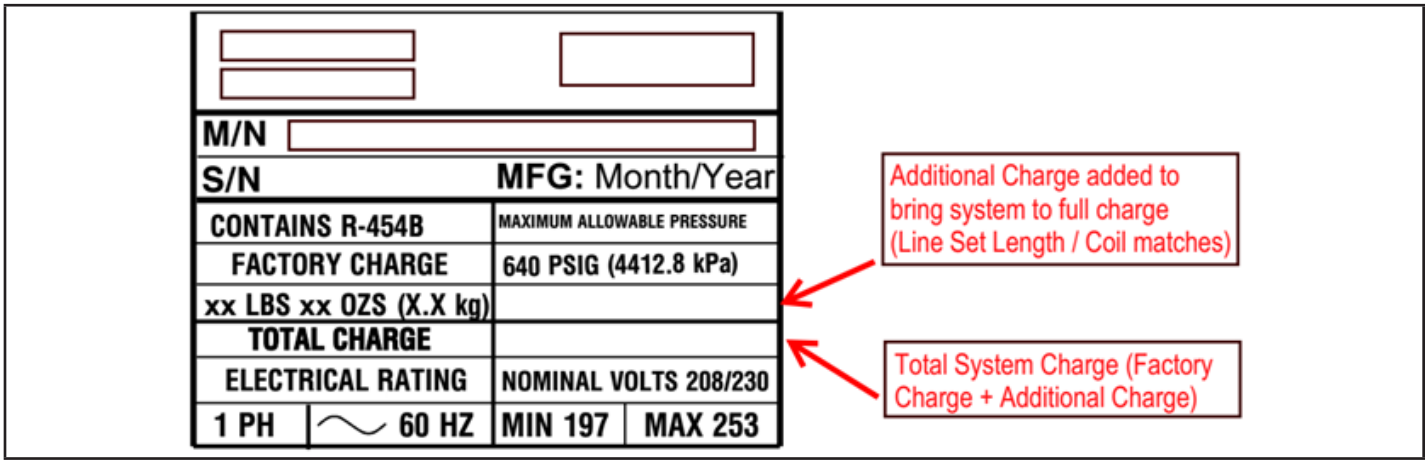

(NOTE - The nameplate is shown for illustration purposes only. Go to actual nameplate on outdoor unit for charge information.)

Defrost System

This section addresses:

- Emergency Heat
- Defrost System Overview
- Defrost Control Connections, Jumper Settings and Features
- Operational Mode Overview (Calibration, Normal and Defrost)
- Defrost Cycle Actuation

EMERGENCY HEAT (AMBER LIGHT)

An emergency heat function is designed into some room thermostats. This feature is applicable when isolation of the outdoor unit is required, or when auxiliary electric heat is staged by outdoor thermostats. When the room thermostat is placed in the emergency heat position, the outdoor unit control circuit is isolated from power and field-provided relays bypass the outdoor thermostats. An amber indicating light simultaneously comes on to remind the homeowner that he is operating in the emergency heat mode.

Emergency heat is usually used during an outdoor unit shutdown, but it should also be used following a power outage if power has been off for over an hour and the outdoor temperature is below 50°F (10°C). System should be left in the emergency heat mode at least six hours to allow the crankcase heater sufficient time to prevent compressor slugging.

DEFROST SYSTEM OVERVIEW

The control monitors ambient temperature, outdoor coil temperature, and total run time to determine when a defrost cycle is required. The coil temperature probe is designed with a spring clip to allow mounting to the outside coil tubing. The location of the coil sensor is important for proper defrost operation.

***NOTE** – The demand defrost control accurately measures the performance of the system as frost accumulates on the outdoor coil. This typically will translate into longer running time between defrost cycles as more frost accumulates on the outdoor coil before the demand defrost control initiates defrost cycles.*

DEFROST CONTROL CONNECTIONS, JUMPER SETTINGS AND FEATURES

Defrost Temperature Termination Jumper Settings (P1)

The demand defrost control selections are: 50, 70, 90 and 100°F (10, 21, 32 and 38°C). The shunt termination pin is factory set at 50°F (10°C). If temperature shunt is not installed, default termination temperature is 90°F (32°C).

Test Pins (P1) Function

Placing the jumper on the field test pins (P1) allows the technician to:

- Clear short cycle lockout
- Clear five-strike fault lockout
- Cycle the unit in and out of defrost mode
- Place the unit in defrost mode to clear the coil

Nominal Defrost Time Selection Input

(Replaces High Stage Lock-in Temperature Selection Input) [BE1]

The nominal defrost time selection input is provided by the position of a selection shunt on the P3 header. If the nominal defrost time shunt is not installed, the default nominal defrost time shall be 140 seconds. The control shall be provided from the factory with the shunt installed in the 140 position. The nominal defrost time selection is used as the value for the Nom_def_time variable.

Position Definitions for P3 Header:

- Connecting P3-1 and P3-2 will set the nominal defrost time to 140 seconds.
- Connecting P3-2 and P3-3 will set the nominal defrost time to 100 seconds.
- Connecting P3-3 and P3-4 will set the nominal defrost time to 60 seconds.
- Connecting P3-4 and P3-5 will set the nominal defrost time to 165 seconds.

[BE1] Modifying the function of the shunt on the P3 header to select the nominal defrost time. The high stage lock in function is not needed for this product since it is only single stage.

Compressor Delay Mode (P5)

The demand defrost control has a field-selectable function to reduce occasional sounds that may occur while the unit is cycling in and out of the defrost mode. When a jumper is installed on the **DELAY** pins, the compressor will be cycled off for 30 seconds going in and out of the defrost mode. Units are shipped with jumper installed on **DELAY** pins.

***NOTE** – The 30 second off cycle is NOT functional when jumpering the TEST pins.*

HIGH PRESSURE SWITCH (S4)

This unit is equipped with a high pressure switch which is located on the liquid line. The SPST, normally closed pressure switch opens when liquid line pressure rises above the factory setting of 590 + 15 psig and automatically resets at 418 + 15 psig.

LOW PRESSURE SWITCH (S87)

This unit is equipped with a low pressure switch which is located on the suction line. The SPST, normally open pressure switch remains open when suction line pressure is low and closes when pressure rises above 40 ± 5 psig.

DEMAND DEFROST CONTROL (A108) DIAGNOSTIC LEDS

The state (Off, On, Flashing) of two LEDs on the demand defrost control (DS1 [Red] and DS2 [Green]) indicate diagnostics conditions that are described in table 3.

TABLE 3
DEMAND DEFROST CONTROL (A108) DIAGNOSTIC LEDS

DS1 and DS2 System Status, Fault and Lockout Codes

DS2 Green	DS1 Red	Type	Condition/Code	Possible Cause(s)	Solution
OFF	OFF	Status	Power problem	No power (24V) to demand defrost control terminals R and C or demand defrost control failure.	1. Check control transformer power (24V). 2. If power is available to demand defrost control and LED(s) do not light, replace demand defrost control.
Simultaneous SLOW Flash		Status	Normal operation	Unit operating normally or in standby mode.	None required.
Alternating SLOW Flash		Status	5-minute anti-short cycle delay	Initial power up, safety trip, end of room thermostat demand.	None required (jumper **TEST** pins to override)
Simultaneous FAST Flash		Fault	Ambient Sensor Problem	Sensor being detected open or shorted or out of temperature range. Demand defrost control will revert to time/temperature defrost operation. (System will still heat or cool).	
Alternating FAST Flash		Fault	Coil Sensor Problem	Sensor being detected open or shorted or out of temperature range. Demand defrost control will not perform demand or time/temperature defrost operation. (System will still heat or cool.)	
ON	ON	Fault	Demand Defrost Control Failure	Indicates that demand defrost control has internal component failure. Cycle 24VAC power to demand defrost control. If code does not clear, replace demand defrost control.	
OFF	SLOW Flash	Fault	Low Pressure Fault	• Restricted air flow over indoor or outdoor coil. • Improper refrigerant charge in system. • Improper metering device installed or incorrect operation of metering device. • Incorrect or improper sensor location or connection to system.	• Remove any blockages or restrictions from coils and/or fans. Check indoor and outdoor fan motor for proper current draws. • Check system charge using subcooling method. • Check system operating pressures and compare to unit subcooling tables in this instruction or located on unit access panel. • Make sure all pressure switches and sensors have secure connections to system to prevent refrigerant leaks or errors in pressure and temperature measurements.
OFF	ON	Lockout	Low Pressure Lockout		
SLOW Flash	OFF	Fault	High Pressure Fault		
ON	OFF	Lockout	High Pressure Lockout		

(Each fault adds 1 strike to that code's counter; 5 strikes per code = LOCKOUT)

Homeowners Information

⚠ CAUTION

Before attempting to perform any service or maintenance, turn the electrical power to unit OFF at disconnect switch.

In order to ensure peak performance, your system must be properly maintained. Clogged filters and blocked airflow prevent your unit from operating at its most efficient level. The system should be inspected and serviced before each cooling and heating season by a licensed professional HVAC service technician (or equivalent).

Heat Pump Operation

Your new Lennox heat pump has several characteristics that you should be aware of:

- Heat pumps satisfy heating demand by delivering large amounts of *warm* air into the living space. This is quite different from gas- or oil-fired furnaces or an electric furnace which deliver lower volumes of considerably *hotter* air to heat the space.
- Do not be alarmed if you notice frost on the outdoor coil in the winter months. Frost develops on the outdoor coil during the heating cycle when temperatures are below 45ºF (7ºC). An electronic control activates a defrost cycle lasting 5 to 15 minutes at preset intervals to clear the outdoor coil of the frost.
- During the defrost cycle, you may notice steam rising from the outdoor unit. This is a normal occurrence. The thermostat may engage auxiliary heat during the defrost cycle to satisfy a heating demand; however, the unit will return to normal operation at the conclusion of the defrost cycle.

Homeowner Maintenance

The following maintenance may be performed by the homeowner.

- Contact a licensed professional HVAC technician to schedule inspection and maintenance appointments for your equipment before each heating and cooling season.
- Check the indoor unit filter each month and replace the filter, if necessary.
- Have your Lennox dealer show you where your indoor unit filter is located. It will be either at the indoor unit (installed internal or external to the cabinet) or behind a return air grille in the wall or ceiling. Check the filter monthly and clean or replace it as needed. Disposable filters should be replaced with a filter of the same type and size.

- Check the indoor unit drain line for obstructions monthly. The indoor coil is equipped with a drain pan to collect condensate formed as your system removes humidity from the inside air. Have your dealer show you the location of the drain line and how to check for obstructions. (This would also apply to an auxiliary drain, if installed.)
- Check the area around the outdoor unit monthly and remove any obstructions that may restrict airflow to the outdoor unit. This would include grass clippings, leaves, or papers that may have settled around the unit.
- Trim shrubbery away from the unit and periodically check for debris which collects around the unit.
- During the winter months, keep the snow level below the louvered panels.

***NOTE** - The filter and all access panels must be in place any time the unit is in operation. If you are unsure about the filter required for your system, call your Lennox dealer for assistance.*

⚠ IMPORTANT

Sprinklers and soaker hoses should not be installed where they could cause prolonged exposure to the outdoor unit by treated water. Prolonged exposure of the unit to treated water (i.e., sprinkler systems, soakers, waste water, etc.) will corrode the surface of the steel and aluminum parts, diminish performance and affect longevity of the unit.

Thermostat Operation

See the thermostat homeowner manual for instructions on how to operate your thermostat.

Pre-Service Check

If your system fails to operate, check the following before calling for service:

- Verify room thermostat settings are correct.
- Verify that all electrical disconnect switches are ON.
- Check for any blown fuses or tripped circuit breakers.
- Verify unit access panels are in place.
- Verify air filter is clean.

If service is needed, locate and write down the unit model number and have it handy before calling.

Extended Power Outage

The heat pump is equipped with a compressor crankcase heater which protects the compressor during cold weather operation.

If power to your unit has been interrupted for several hours or more, set the room thermostat selector to the EMERGENCY HEAT setting to obtain temporary heat without the risk of serious damage to the heat pump.

In EMERGENCY HEAT mode, all heating demand is satisfied by auxiliary heat; heat pump operation is locked out. After a six-hour compressor crankcase warm-up period, the thermostat can be switched to the HEAT setting and normal heat pump operation may resume.

Professional Maintenance

NOTICE !

Failure to follow instructions will cause damage to the unit.

This unit is equipped with an aluminum coil. Aluminum coils may be damaged by exposure to solutions with a pH below 5 or above 9. The aluminum coil should be cleaned using potable water at a moderate pressure (less than 50psi). If the coil cannot be cleaned using water alone, Lennox recommends use of a coil cleaner with a pH in the range of 5 to 9. The coil must be rinsed thoroughly after cleaning.

In coastal areas, the coil should be cleaned with potable water several times per year to avoid corrosive buildup (salt).

Your heating and air conditioning system should be inspected and maintained twice each year (before the start of the cooling and heating seasons) by a licensed professional HVAC technician. You can expect the technician to check the following items. **These checks may only be conducted by a licensed professional HVAC technician**.

Outdoor Unit

1 - Inspect component wiring for loose, worn or damaged connections. Also check for any rubbing or pinching of wires. Confirm proper voltage plus amperage of outdoor unit.

2 - Check the cleanliness of outdoor fan and blade condition (cracks) and clean or replace them, if necessary.

3 - Inspect base pan drains for debris and clean as necessary.

4 - Inspect the condition of refrigerant piping and confirm that pipes are not rubbing copper-to-copper. Also, check the condition of the insulation on the refrigerant lines. Repair, correct, or replace as necessary.

5 - Test capacitor. Replace as necessary.

6 - Inspect contactor contacts for pitting or burn marks. Replace as necessary.

7 - Check outdoor fan motor for worn bearings/ bushings. Replace as necessary.

8 - Inspect and clean outdoor coils, if necessary and note any damage to coils or signs of leakage.

Indoor Unit (Air Handler or Furnace)

1 - Inspect component wiring for loose, worn or damaged connections. Confirm proper voltage plus amperage of indoor unit.

2 - Inspect and clean or replace air filters in indoor unit.

3 - Check the cleanliness of indoor blower and clean blower, if necessary.

4 - Inspect the indoor coil drain pans and condensate drains for rust, debris, obstructions, leaks or cracks. Pour water in pans to confirm proper drainage from the pan through to the outlet of the pipe. Clean or replace as necessary.

5 - Inspect and clean indoor coil, if necessary.

6 - Inspect the condition of the refrigerant lines and confirm that pipes are not rubbing copper-to-copper. Also, ensure that refrigerant pipes are not being affected by indoor air contamination. Check condition of insulation on the refrigerant lines. Repair, correct, or replace as necessary.

7 - Inspect the duct system for leaks or other problems. Repair or replace as necessary.

8 - Check for bearing/bushing wear on indoor blower motor. Replace as necessary.

9 - If your heat pump is matched with a gas- or oil-fired furnace for auxiliary heating, indoor unit service will also include inspection and cleaning of the burners, and a full inspection of the gas valve, heat exchanger and flue (exhaust) system.

General System Test with System Operating

1 - Your technician should perform a general system test. He will turn on the air conditioner to check operating functions such as the startup and shutoff operation. He will also check for unusual noises or odors, and measure indoor/outdoor temperatures and system pressures as needed. He will check the refrigerant charge per the charging sticker information on the outdoor unit.

2 - Verify that system total static pressure and airflow settings are within specific operating parameters.

3 - Verify correct temperature drop across indoor coil.

Decommissioning

Before carrying out this procedure, it is essential that the technician is completely familiar with the equipment and all its detail. It is recommended good practice that all refrigerants are recovered safely.

Prior to the task being carried out, an oil and refrigerant sample shall be taken in case analysis is required prior to re-use of recovered refrigerant. It is essential that electrical power is available before starting decommissioning.

a) Become familiar with the equipment and its operation.

b) Isolate system electrically.

c) Before attempting the procedure, ensure that:

- mechanical handling equipment is available, if required, for handling refrigerant cylinders;
- all personal protective equipment is available and being used correctly;
- the recovery process is supervised at all times by a competent person;
- recovery equipment and cylinders conform to the appropriate standards.

d) Pump down refrigerant system, if possible.

e) If a vacuum is not possible, make a manifold so that refrigerant can be removed from various parts of the system.

f) Make sure that cylinder is situated on the scales before recovery takes place.

g) Start the recovery machine and operate in accordance with instructions.

h) Do not overfill cylinders (no more than 80% volume liquid charge).

i) Do not exceed the maximum working pressure of the cylinder, even temporarily.

j) When the cylinders have been filled correctly and the process completed, make sure that the cylinders and the equipment are removed from site promptly and all isolation valves on the equipment are closed off.

k) Recovered refrigerant shall not be charged into another REFRIGERATING SYSTEM unless it has been cleaned and checked.

⚠ IMPORTANT

Equipment shall be labelled stating that it has been decommissioned and emptied of refrigerant. The label shall be signed and dated. Ensure that there are labels on the equipment that state the flammability of the refrigerant used.

TABLE 4. R454B Temperature (°F) - Pressure (Psig)

Pressure (psig)	Saturated Liquid Temp (F°)	Saturated Vapor Temp (F°)	Pressure (psig)	Saturated Liquid Temp (F°)	Saturated Vapor Temp (F°)	Pressure (psig)	Saturated Liquid Temp (F°)	Saturated Vapor Temp (F°)	Pressure (psig)	Saturated Liquid Temp (F°)	Saturated Vapor Temp (F°)
0	-58.9	-57.1	158	58.9	61.3	272	93.0	95.4	362	113.4	115.6
25	-19.2	-17.2	160	59.6	62.0	274	93.5	95.9	364	113.8	116.0
30	-13.9	-11.8	165	61.4	63.8	276	94.0	96.4	366	114.2	116.4
35	-9.0	-6.9	170	63.1	65.5	278	94.5	96.9	368	114.6	116.8
40	-4.4	-2.3	175	64.9	67.3	280	95.0	97.4	370	115.0	117.2
45	-0.2	1.9	180	66.6	69.0	282	95.5	97.9	372	115.4	117.6
50	3.7	5.9	185	68.2	70.6	284	96.0	98.4	374	115.8	118.0
55	7.5	9.7	190	69.8	72.2	286	96.5	98.8	376	116.2	118.4
60	11.0	13.2	195	71.4	73.8	288	97.0	99.3	378	116.6	118.8
65	14.4	16.6	200	73.0	75.4	290	97.5	99.8	380	117.0	119.2
70	17.6	19.8	202	73.6	76.0	292	97.9	100.3	382	117.4	119.6
75	20.6	22.9	204	74.2	76.6	294	98.4	100.7	384	117.7	119.9
80	23.6	25.9	206	74.9	77.3	296	98.9	101.2	386	118.1	120.3
85	26.4	28.7	208	75.5	77.9	298	99.4	101.7	388	118.5	120.7
90	29.1	31.4	210	76.1	78.5	300	99.8	102.2	390	118.9	121.1
95	31.7	34.0	212	76.7	79.1	302	100.3	102.6	392	119.3	121.5
100	34.3	36.6	214	77.3	79.7	304	100.8	103.1	394	119.7	121.9
102	35.3	37.6	216	77.9	80.2	306	101.2	103.5	396	120.1	122.2
104	36.2	38.6	218	78.4	80.8	308	101.7	104.0	398	120.5	122.6
106	37.2	39.5	220	79.0	81.4	310	102.1	104.4	400	120.8	123.0
108	38.1	40.5	222	79.6	82.0	312	102.6	104.9	405	121.8	123.9
110	39.1	41.4	224	80.2	82.6	314	103.0	105.4	410	122.7	124.9
112	40.0	42.4	226	80.8	83.1	316	103.5	105.8	415	123.6	125.8
114	40.9	43.3	228	81.3	83.7	318	103.9	106.2	420	124.6	126.7
116	41.8	44.2	230	81.9	84.3	320	104.4	106.7	425	125.5	127.6
118	42.7	45.1	232	82.4	84.8	322	104.8	107.1	430	126.4	128.5
120	43.6	46.0	234	83.0	85.4	324	105.3	107.6	435	127.3	129.4
122	44.5	46.9	236	83.6	86.0	326	105.7	108.0	440	128.2	130.2
124	45.4	47.7	238	84.1	86.5	328	106.2	108.5	445	129.0	131.1
126	46.2	48.6	240	84.7	87.1	330	106.6	108.9	450	129.9	132.0
128	47.1	49.4	242	85.2	87.6	332	107.0	109.3	460	131.6	133.7
130	47.9	50.3	244	85.8	88.1	334	107.5	109.7	470	133.3	135.3
132	48.8	51.1	246	86.3	88.7	336	107.9	110.2	480	135.0	137.0
134	49.6	51.9	248	86.8	89.2	338	108.3	110.6	490	136.7	138.6
136	50.4	52.8	250	87.4	89.7	340	108.8	111.0	500	138.3	140.2
138	51.2	53.6	252	87.9	90.3	342	109.2	111.5	510	139.9	141.8
140	52.0	54.4	254	88.4	90.8	344	109.6	111.9	520	141.5	143.3
142	52.8	55.2	256	88.9	91.3	346	110.0	112.3	530	143.0	144.8
144	53.6	56.0	258	89.5	91.8	348	110.5	112.7	540	144.5	146.3
146	54.3	56.7	260	90.0	92.4	350	110.9	113.1	550	146.1	147.8
148	55.1	57.5	262	90.5	92.9	352	111.3	113.5	560	147.5	149.2
150	55.9	58.3	264	91.0	93.4	354	111.7	114.0	570	149.0	150.7
152	56.6	59.0	266	91.5	93.9	356	112.1	114.4	580	150.5	152.1
154	57.4	59.8	268	92.0	94.4	358	112.5	114.8	590	151.9	153.5
156	58.1	60.5	270	92.5	94.9	360	112.9	115.2	600	153.3	154.8

NOTES

1. R-454B is a zeotropic blend and must be charged with liquid refrigerant only.
2. Saturated liquid temperature is used to calculate liquid subcooling.
3. Saturated vapor temperature is used to calculate suction superheat.
4. See unit charging label for subcooling and additional charging information.

ML16KP2 Start-Up and Performance Checklist

Customer _____ Address _____

Indoor Unit Model _____ Serial _____

Outdoor Unit Model _____ Serial _____

Notes: _____

_____

START UP CHECKS

Refrigerant Type: _____

Rated Load Amps: _____ Actual Amps___ Rated Volts_____ Actual Volts_____

Condenser Fan Full Load Amps_____ Actual Amps:__

COOLING MODE

Suction Pressure: _____ **Liquid Pressure:**____

Supply Air **Temperature:**_____ Ambient **Temperature:** _____ Return Air: **Temperature:**_____

System Refrigerant Charge (Refer to manufacturer's information on unit or installation instructions for required subcooling and approach temperatures.)

Subcooling: Saturated Condensing Temperature (A) *minus* Liquid Line Temperature (B)	A	—	B	=	SUBCOOLING
Approach: Liquid Line Temperature (A) *minus* Outdoor Air Temperature (B)	A	—	B	=	APPROACH
Indoor Coil Temperature Drop (18 to 22°F) Return Air Temperature (A) *minus* Supply Air Temperature (B)	A	—	B	=	COIL TEMP DROP