©2026 Lennox Industries Inc.
Dallas, Texas, USA

THIS MANUAL MUST BE LEFT WITH THE HOMEOWNER FOR FUTURE REFERENCE

⚠ WARNING

Every working procedure that affects safety means shall only be carried out by competent persons. This appliance is not to be used by persons (including children) with reduced physical, sensory or mental capabilities, or lack of experience and knowledge, unless they have been given supervision or instruction concerning use of the appliance by a person responsible for their safety. Children should be supervised to ensure they do not play with the appliance.

⚠ CAUTION

Leak Detection System installed. Unit must be powered except for service.

⚠ WARNING

Maximum Altitude of application is 3200m above sea level.

⚠ WARNING

Improper installation, adjustment, alteration, service or maintenance can cause property damage, personal injury or loss of life. Installation and service must be performed by a licensed professional HVAC installer or equivalent, service agency, or the gas supplier.

⚠ CAUTION

Servicing shall be performed only as recommended by the manufacturer.

INSTALLATION INSTRUCTIONS

Merit® Series
CBK43UHET Air Handler Units – R454B

MULTI-POSITION AIR HANDLERS
508799-01
02/2026

Table of Contents

General Information 2
Wiring Diagrams 3
Air Flow – Cooling Blower Speed 4
Blower Data 5
Requirements 8
Unit Dimensions – Upflow Position....9
Unit Dimensions – Horizontal Position 10
Installation Clearances 11
Installation 11
Sensor / Bracket Installation....14
Condensate Drain....18
Duct System and Filters 18
Brazing Refrigerant Lines 19
Sealing the Unit 22
Electrical Connections 22
Check-out Procedures 24
Operation 25
Homeowner Maintenance 25
Repairing or Replacing Cabinet Insulation 26
Professional Maintenance 26
Sensor Maintenance 27
Modes of Operation....27
Start Up Test Procedure 30
Decommissioning 30

***NOTE** – This unit is a PARTIAL UNIT AIR CONDITIONER, complying with PARTIAL UNIT requirements of this Standard, and must only be connected to other units that have been confirmed as complying to corresponding PARTIAL UNIT requirements of this Standard, UL 60335-2-40/CSA C22.2 No. 60335-2-40, or UL 1995/CSA C22.2 No 236. Partial units shall only be connected to an appliance suitable for the same refrigerant.*

⚠ IMPORTANT

The Clean Air Act of 1990 bans the intentional venting of refrigerant (CFCs, HCFCs and HFCs) as of July 1, 1992. Approved methods of recovery, recycling or reclaiming must be followed. Fines and/or incarceration may be levied for noncompliance.

⚠ WARNING

Ducts connected to an appliance shall not contain a potential ignition source

0226
508799-01

⚠ WARNING

- Do not use means to accelerate the defrosting process or to clean, other than those recommended by the manufacturer.
- The appliance shall be stored in a room without continuously operating ignition sources (for example: open flames, an operating gas appliance, or an operating electric heater).
- Do not pierce or burn.
- Be aware that refrigerants may not contain an odor.

⚠ WARNING

For appliances using A2L refrigerants connected via an air duct system to one or more rooms, only auxiliary devices approved by the appliance manufacturer or declared suitable with the refrigerant shall be installed in connecting ductwork.

⚠ WARNING

Ducts connected to an appliance shall not contain a potential ignition source

⚠ WARNING

Auxiliary devices which may be a potential ignition source shall not be installed in the duct work. Examples of such potential ignition sources are hot surfaces with a temperature exceeding 700°C and electric switching devices.

General Information

The CBK43UHET series air handler **with all-aluminum coil** is designed for indoor installation in conditioned or unconditioned spaces. As shipped, the unit is ready for installation in either upflow, horizontal left-hand or right-hand air discharge applications. Electric heat, downflow air discharge kits, air filters and other accessories are available and listed in the *CBK43UHET Product Specification bulletin* for ordering.

This instruction is intended as a general guide and does not supersede local or national codes in any way. Consult authorities having jurisdiction before installation.

⚠ WARNING

For duct connected appliances, false ceilings or drop ceilings may be used as a return air plenum if a REFRIGERANT DETECTION SYSTEM is provided in the appliance and any external connections are also provided with a sensor immediately below the return air plenum duct joint.

⚠ CAUTION

Any service personnel installing, decommissioning, or performing maintenance on the unit must be properly trained with A2L refrigerants

⚠ WARNING

If this appliance is conditioning a space with an area smaller than TA_{min} or stored in a space with an area smaller than A_{min} as defined by this instruction, then that space must be without continuously operating open flames (e.g. an operating gas appliance) or other potential ignition sources (e.g. an operating electric heater or similar hot surface). A flame-producing device may be installed in the same space if the device is provided with an effective flame arrest system.

TAmin Table

Charge (lb)	10.0	15.0	20.0	25.0	30.0
Charge (kg)	4.5	6.8	9.1	11.3	13.6
Minimum Conditioned Area (ft2)	149.9	224.9	299.9	374.8	449.8
Minimum Conditioned Area (m2)	13.9	20.9	27.9	34.8	41.8

IMPORTANT: Special procedures are required for cleaning the all-aluminum coil in this unit. See “Professional Maintenance” section in this instruction for information.

***NOTE** – Multiply values in TAmin table by the Altitude Adjustment Factors to correct TAmin based on installed altitude.*

Altitude Adjustment Factor

Altitude (m)	0	200	400	600	800	1000	1200	1400	1600
Altitude (ft)	0	660	1310	1970	2620	3280	3940	4590	5250
Adj. Factor	1	1	1	1	1.02	1.05	1.04	1.1	1.12
Altitude (m)	1600	1800	2000	2200	2400	2600	2800	3000	3200
Altitude (ft)	5250	5910	6560	7220	7870	8530	9190	9840	10500
Adj. Factor	1.12	1.15	1.18	1.21	1.25	1.28	1.32	1.36	1.4

Shipping and Packing List

Package 1 of 1 contains:

1 – Assembled air handler unit factory-equipped for upflow or horizontal right air discharge application (includes upflow and horizontal drain pans and **preinstalled air filter**).

Check the air handler for shipping damage; if found, immediately contact the last carrier. Check the unit rating plate to confirm that delivered unit matches order.

Wiring Diagrams

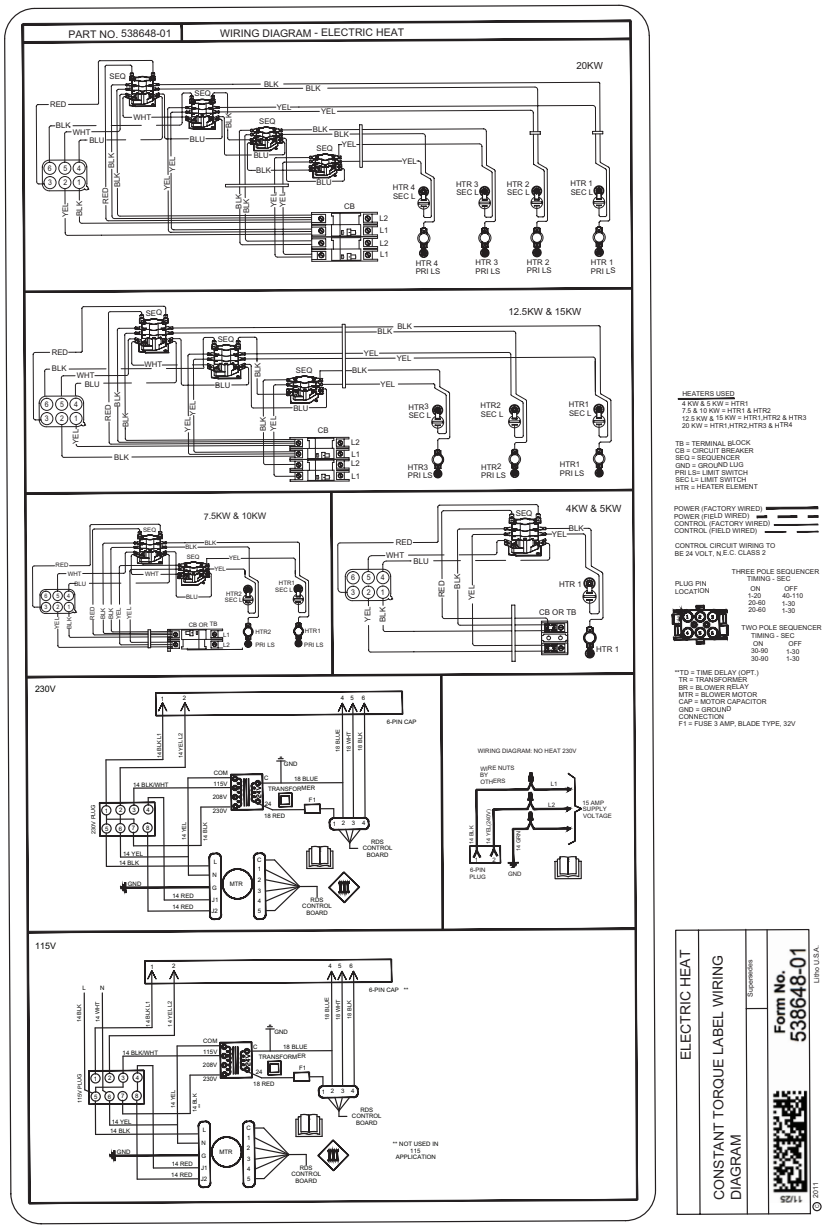

FIGURE 1

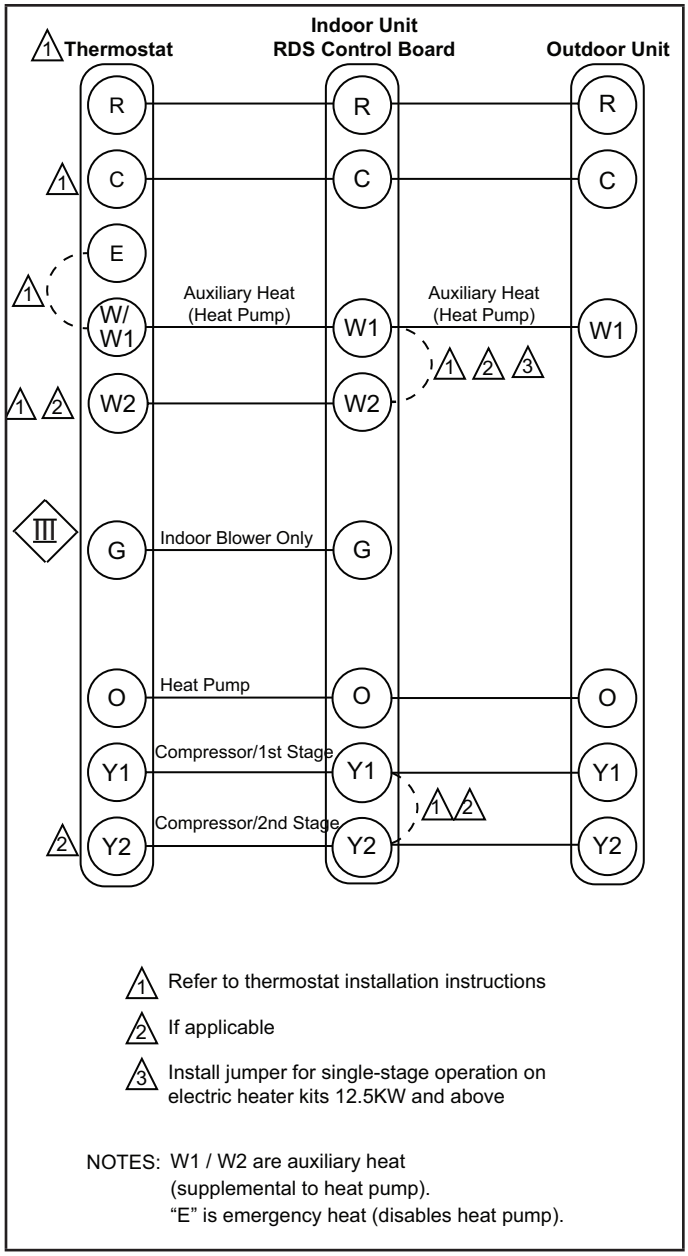

FIGURE 2. Thermostat Designations – Non-Communicating

Air Flow – Cooling Blower Speed

The cooling blower speed is factory configured to provide correct air flow for an outdoor unit that matches the cooling capacity rating of the air handler.

If the outdoor unit is smaller than the maximum cooling capacity rating for the air handler, the cooling blower speed may need to be changed. Refer to blower performance data on pages 5 through 7.

⚠ IMPORTANT

Minimum Air Flow when RDS initiates mitigation is factory set at 350 CFM Per Ton.

⚠ WARNING

Electric shock hazard! - Disconnect all power supplies before servicing.

Replace all parts and panels before operating.

Failure to do so can result in death or electrical shock.

ADJUSTING BLOWER SPEED

Motor Speed Taps

***NOTE** –Unit is programmed for a 45-second OFF delay during all cooling and HP heating calls. Unit is programmed for a 120-second OFF delay during electric heat calls.*

These settings are for nominal tonnage match-ups with the units. When matched with other sizes, it is recommended that the CFM be adjusted to approximately 400 CFM per ton.

TABLE 1

Tap	Operation	Remarks
1	Continuous fan or low-speed fan (for two -speed heat pumps or AC units)	Continuous fan speed uses G dip switches on RDS control board. Low speed uses Y1 dip switches on RDScontrol board
2		
3	Lower tonnage speed	CFM set at 1/2 ton lower than nominal of unit at 0.5" (e.g. 3-ton set at 1000 cfm.
4	Cooling Speed Settings	CFM set at 400 cfm per nominal ton at 0.5" static ± 100cfm. Cooling speed settings use Y2 dip switches on RDS control board.
5		
6		
7		
8		
9	High static applications	CFM set at 1/2 ton higher than nominal of unit at 0.5" static.

NOTE: Electric heat speed is factory set at tap 6, can be increased to tap 9 for high static applications.

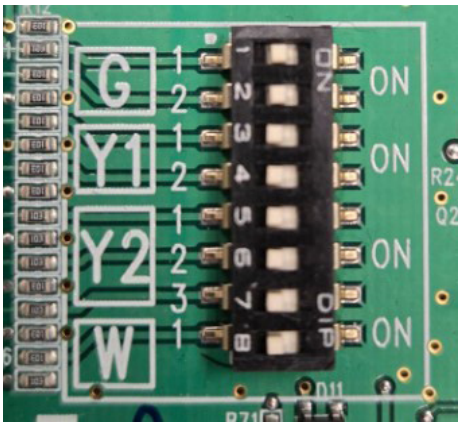

FIGURE 3

TABLE 2

Airflow Settings
See FIGURE 3

Blower Speed Selection Switch Group	Speed	DIP SW1	DIP SW2	DIP SW3
G	1*	OFF	OFF	n/a
	2	ON	OFF	
	3	OFF	ON	
	4	ON	ON	
Y1	1*	OFF	OFF	n/a
	2	ON	OFF	
	3	OFF	ON	
	4	ON	ON	
Y2	6*	OFF	OFF	OFF
	3	ON	OFF	OFF
	4	OFF	ON	OFF
	5	ON	ON	OFF
	7	OFF	OFF	ON
	8	ON	OFF	ON
	9	OFF	ON	ON
	6	ON	ON	ON
W	6*	OFF	n/a	n/a
	9	ON	n/a	

* Factory Default Setting

BLOWER DATA

CBK43UHET-018 PERFORMANCE

External Static Pressure in. w.g.	Standard CFM Air Volume / Watts at Various Blower Speeds																	
	Tap 1		Tap 2		Tap 3		Tap 4		Tap 5		Tap 6		Tap 7		Tap 8		Tap 9	
	SCFM	Watts	SCFM	Watts	SCFM	Watts	SCFM	Watts	SCFM	Watts	SCFM	Watts	SCFM	Watts	SCFM	Watts	SCFM	Watts
0.10	416	34	531	49	637	69	716	86	753	96	791	107	827	118	862	129	933	156
0.20	327	38	454	54	583	74	670	92	709	102	750	113	787	123	823	135	898	162
0.30	270	42	390	58	510	80	613	98	658	108	700	119	741	130	780	141	858	168
0.40	202	46	348	62	458	84	546	105	591	115	640	127	692	137	734	148	816	175
0.50	143	49	290	67	425	89	505	109	543	120	585	132	627	145	671	157	774	183
0.60	- - -	- - -	234	71	377	93	474	114	513	126	550	138	587	150	624	163	711	192
0.70	- - -	- - -	185	74	328	99	431	119	478	130	523	143	560	156	594	168	670	199
0.80	- - -	- - -	132	77	279	103	387	124	435	135	483	148	529	161	568	174	640	205
0.90	- - -	- - -	- - -	- - -	237	107	342	130	393	141	442	153	489	166	534	179	617	210
1.00	- - -	- - -	- - -	- - -	196	110	300	134	349	147	401	159	451	171	495	184	587	217

NOTE - All air data measured external to unit with dry coil and 1 inch non-pleated air filter in place.
Electric heaters have no appreciable air resistance.

CBK43UHET-024 PERFORMANCE

External Static Pressure in. w.g.	Standard CFM Air Volume / Watts at Various Blower Speeds																	
	Tap 1		Tap 2		Tap 3		Tap 4		Tap 5		Tap 6		Tap 7		Tap 8		Tap 9	
	SCFM	Watts	SCFM	Watts	SCFM	Watts	SCFM	Watts	SCFM	Watts	SCFM	Watts	SCFM	Watts	SCFM	Watts	SCFM	Watts
0.10	527	49	633	69	787	108	857	130	888	142	927	157	966	173	1004	189	1089	232
0.20	456	55	583	74	748	113	820	136	852	148	893	163	932	179	969	195	1057	238
0.30	389	58	509	80	702	119	779	142	814	153	856	169	897	185	935	201	1024	244
0.40	347	63	457	84	642	127	732	148	771	160	814	175	860	192	898	208	992	252
0.50	291	67	423	89	583	133	668	157	715	169	769	183	817	200	858	215	958	259
0.60	234	71	377	93	549	138	621	163	658	176	706	192	762	210	813	225	920	267
0.70	184	74	329	99	520	143	591	169	622	182	665	199	710	217	754	234	881	277
0.80	131	77	279	103	483	148	564	174	597	187	635	205	677	223	715	241	822	288
0.90	- - -	- - -	236	107	444	154	530	179	569	193	613	210	652	229	687	247	783	295
1.00	- - -	- - -	191	110	404	160	495	185	535	199	582	217	628	235	665	254	753	302

NOTE - All air data measured external to unit with dry coil and 1 inch non-pleated air filter in place.
Electric heaters have no appreciable air resistance.

CBK43UHET-030 PERFORMANCE

External Static Pressure in. w.g.	Standard CFM Air Volume / Watts at Various Blower Speeds																	
	Tap 1		Tap 2		Tap 3		Tap 4		Tap 5		Tap 6		Tap 7		Tap 8		Tap 9	
	SCFM	Watts	SCFM	Watts	SCFM	Watts	SCFM	Watts	SCFM	Watts	SCFM	Watts	SCFM	Watts	SCFM	Watts	SCFM	Watts
0.10	646	68	753	93	946	156	1020	188	1064	209	1106	230	1150	254	1190	280	1279	337
0.20	587	73	710	98	911	162	987	194	1031	215	1076	237	1120	261	1162	287	1250	345
0.30	514	79	650	104	873	167	951	200	999	221	1042	242	1090	266	1131	291	1223	352
0.40	461	84	581	111	824	174	907	206	963	227	1008	249	1056	273	1098	297	1193	356
0.50	425	88	535	116	780	182	867	214	918	235	967	256	1016	280	1061	305	1162	364
0.60	376	93	503	121	715	191	821	223	880	243	929	265	978	289	1027	314	1127	372
0.70	328	98	467	126	673	197	761	232	823	254	888	274	943	298	991	323	1092	381
0.80	278	102	421	131	642	203	722	239	776	262	829	285	892	310	955	333	1060	390
0.90	232	106	378	138	617	209	692	245	741	268	790	292	842	318	898	345	1025	401
1.00	192	109	335	142	589	214	669	251	715	274	760	299	807	325	858	354	976	414

NOTE - All air data measured external to unit with dry coil and 1 inch non-pleated air filter in place.
Electric heaters have no appreciable air resistance.

CBK43UHET-036 PERFORMANCE

External Static Pressure in. w.g.	Standard CFM Air Volume / Watts at Various Blower Speeds																	
	Tap 1		Tap 2		Tap 3		Tap 4		Tap 5		Tap 6		Tap 7		Tap 8		Tap 9	
	SCFM	Watts	SCFM	Watts	SCFM	Watts	SCFM	Watts	SCFM	Watts	SCFM	Watts	SCFM	Watts	SCFM	Watts	SCFM	Watts
0.10	749	86	874	120	1115	212	1198	254	1241	279	1283	306	1326	333	1373	367	1466	438
0.20	703	92	839	125	1078	221	1164	264	1210	289	1253	315	1297	343	1345	377	1439	449
0.30	647	99	788	133	1052	227	1131	273	1178	299	1221	325	1264	354	1313	388	1409	461
0.40	595	104	740	140	1017	235	1108	279	1155	305	1200	332	1239	363	1285	398	1381	471
0.50	562	109	690	147	975	245	1075	288	1123	314	1170	341	1216	370	1268	404	1357	481
0.60	525	114	658	152	936	253	1034	298	1087	324	1139	350	1185	379	1239	414	1338	487
0.70	486	120	628	157	895	262	998	308	1049	335	1100	361	1152	390	1208	424	1310	498
0.80	448	126	592	164	853	270	963	317	1016	344	1066	372	1116	401	1174	435	1280	508
0.90	411	133	558	170	826	276	923	326	978	353	1034	381	1082	411	1141	446	1245	517
1.00	376	139	524	176	806	281	898	330	942	361	995	390	1048	421	1110	457	1195	516

NOTE - All air data measured external to unit with dry coil and 1 inch non-pleated air filter in place.
Electric heaters have no appreciable air resistance.

CBK43UHET-042 PERFORMANCE

External Static Pressure in. w.g.	Standard CFM Air Volume / Watts at Various Blower Speeds																	
	Tap 1		Tap 2		Tap 3		Tap 4		Tap 5		Tap 6		Tap 7		Tap 8		Tap 9	
	SCFM	Watts	SCFM	Watts	SCFM	Watts	SCFM	Watts	SCFM	Watts	SCFM	Watts	SCFM	Watts	SCFM	Watts	SCFM	Watts
0.10	954	126	1067	162	1388	307	1448	343	1480	364	1522	392	1570	423	1611	453	1705	528
0.20	897	136	1019	172	1352	318	1414	355	1447	376	1489	404	1538	435	1580	466	1675	543
0.30	798	147	947	184	1316	329	1380	366	1414	387	1457	415	1506	447	1546	478	1646	555
0.40	748	153	865	193	1276	342	1344	379	1379	400	1423	427	1474	460	1513	490	1616	568
0.50	712	158	822	199	1217	358	1299	394	1338	415	1387	442	1441	472	1480	503	1585	582
0.60	673	164	787	205	1134	373	1226	412	1275	432	1334	459	1399	489	1444	519	1553	595
0.70	620	172	753	211	1085	382	1158	425	1197	448	1251	479	1328	509	1385	539	1518	611
0.80	552	182	711	219	1050	389	1118	434	1152	457	1200	489	1256	525	1305	559	1460	632
0.90	503	191	658	227	1020	396	1086	441	1118	465	1164	498	1213	534	1259	570	1381	653
1.00	461	197	600	239	994	403	1058	450	1089	473	1134	507	1179	543	1225	579	1334	665

NOTE - All air data measured external to unit with dry coil and 1 inch non-pleated air filter in place.
Electric heaters have no appreciable air resistance.

CBK43UHET-048 PERFORMANCE

External Static Pressure in. w.g.	Standard CFM Air Volume / Watts at Various Blower Speeds																	
	Tap 1		Tap 2		Tap 3		Tap 4		Tap 5		Tap 6		Tap 7		Tap 8		Tap 9	
	SCFM	Watts	SCFM	Watts	SCFM	Watts	SCFM	Watts	SCFM	Watts	SCFM	Watts	SCFM	Watts	SCFM	Watts	SCFM	Watts
0.10	1092	178	1197	219	1617	450	1684	502	1721	531	1755	559	1790	590	1829	633	1912	716
0.20	1030	190	1140	229	1580	463	1649	516	1688	546	1722	574	1759	605	1798	645	1884	730
0.30	945	200	1070	242	1538	476	1611	530	1651	560	1685	588	1725	620	1767	659	1855	744
0.40	893	207	999	250	1497	490	1572	544	1613	575	1648	603	1688	635	1736	673	1826	759
0.50	854	213	954	257	1440	505	1519	559	1574	591	1599	618	1646	651	1704	687	1796	774
0.60	818	220	918	264	1385	520	1468	575	1519	607	1554	635	1598	668	1669	704	1764	790
0.70	780	227	884	270	1331	532	1414	590	1464	623	1505	651	1550	685	1628	722	1730	806
0.80	742	236	848	278	1281	540	1366	603	1414	636	1453	666	1497	701	1575	741	1688	827
0.90	703	243	815	287	1248	549	1321	611	1362	643	1406	676	1447	712	1521	756	1639	847
1.00	661	251	779	296	1216	558	1293	621	1335	654	1371	686	1406	720	1453	762	1586	865

NOTE - All air data measured external to unit with dry coil and 1 inch non-pleated air filter in place.
Electric heaters have no appreciable air resistance.

CBK43UHET-060 PERFORMANCE

External Static Pressure in. w.g.	Air Volume / Watts at Various Blower Speeds																	
	Tap 1		Tap 2		Tap 3		Tap 4		Tap 5		Tap 6		Tap 7		Tap 8		Tap 9	
	SCFM	Watts	SCFM	Watts	SCFM	Watts	SCFM	Watts	SCFM	Watts	SCFM	Watts	SCFM	Watts	SCFM	Watts	SCFM	Watts
0.10	1222	224	1348	279	1775	562	1850	629	1889	667	1921	700	1961	741	1995	779	2138	949
0.20	1163	239	1294	295	1751	578	1828	645	1869	684	1902	716	1942	757	1975	795	2120	965
0.30	1094	251	1231	310	1714	597	1796	665	1841	703	1873	736	1917	778	1950	815	2095	979
0.40	1023	263	1167	323	1668	616	1754	684	1802	723	1837	756	1884	797	1918	836	2047	976
0.50	976	271	1101	335	1614	637	1706	705	1756	745	1792	778	1841	819	1879	856	1990	972
0.60	952	278	1060	343	1564	654	1654	726	1705	767	1742	800	1793	843	1832	879	1920	967
0.70	922	286	1036	351	1516	670	1609	744	1659	785	1696	819	1745	864	1784	902	1844	963
0.80	884	295	1010	359	1464	686	1561	761	1613	803	1653	837	1702	882	1741	922	1778	959
0.90	839	303	978	368	1416	700	1514	778	1565	820	1606	855	1656	900	1700	940	1713	956
1.00	794	311	940	377	1381	711	1470	793	1518	836	1560	873	1611	917	1646	949	1642	948

NOTE - All air data measured external to unit with dry coil and 1 inch non-pleated air filter in place.
Electric heaters have no appreciable air resistance.

Requirements

⚠ WARNING

Excessive Weight Hazard - Use two or more people when moving and installing the unit. Failure to do so can result in back or other type of injury.

⚠ IMPORTANT

CBK43UHET units include a factory-installed check/expansion valve which will provide optimal refrigerant control and system performance with outdoor units of varying capacities. These units must be installed as a part of a matched system as outlined in the CBK43UHET Product Specification bulletin.

These instructions are intended as a general guide and do not supersede local or national codes in any way. Consult authorities having jurisdiction before installation.

Compliance with all local, state, or national codes pertaining to this type of equipment should be determined prior to installation. Read this instruction manual, as well as the instructions supplied in separate equipment, before starting the installation.

In addition to conforming to manufacturer's installation instructions and local municipal building codes, installation of Lennox air handler units (with or without optional electric heat), MUST conform with National Fire Protection Association (NFPA) standards: "Standard for Installation of Air Conditioning and Ventilation Systems" (NFPA No. 90A) and "Standard for Installation of Residence Type Warm Air Heating and Air Conditioning Systems" (NFPA No. 90B).

All models are designed for indoor installation only. The installation of the air handler, field wiring, duct system, etc. must conform to the requirements of the National Electrical Code, ANSI/NFPA No. 70 (latest edition) in the United States, and any state laws, and local ordinances (including plumbing or waste water codes).

Local authorities having jurisdiction should be consulted before installation is made. Such applicable regulations or requirements take precedence over the general instructions in this manual.

Install the conditioned air plenum, ducts and air filters (provided) in accordance with NFPA 90B Standard for the Installation of Warm Air Heating and Air-Conditioning Systems (latest edition).

The air handler is shipped from the factory completely assembled. The unit is provided with flanges for the connection of the duct system.

Do not remove the cabinet knockouts until it has been determined which knockouts will need to be removed for the installation.

Select the air discharge position which best suits the site conditions. Consider required clearances, space, routing requirements for refrigerant line, condensate disposal, filters, duct system, wiring, and accessibility for service. Refer to the rating plate on the air handler for specific information.

⚠ WARNING

Danger of explosion. Keep flammable materials and vapors, such as gasoline, away from air handler. Place air handler so that heating elements are at least 18 inches (46 cm) above the floor for a garage installation. Failure to follow these instructions can result in death, explosion, or fire.

⚠ IMPORTANT

Excessive condensation may occur if the unit is installed in a warm, humid place. When the unit is installed in an unconditioned space, apply sealant around electrical wires, refrigerant piping and condensate lines at the point where they enter the cabinet.

This will help prevent air leakage into, and condensation from forming inside of, the air handler, the control box, and on the electrical controls.

Unit Dimensions – Upflow Position

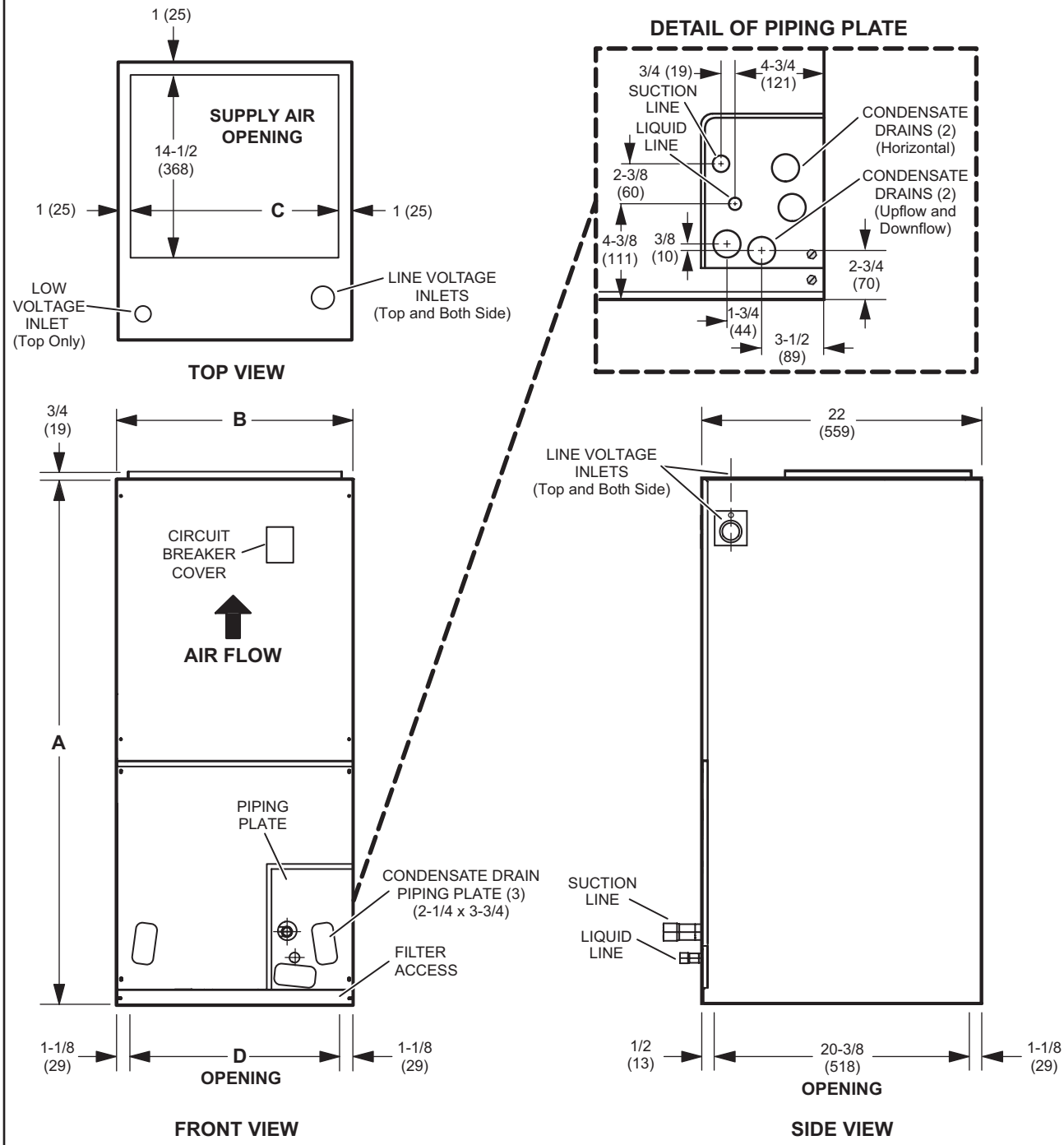

Dimensions	018, 024, 030		036		042		048		060	
	in.	mm	in.	mm	in.	mm	in.	mm	in.	mm
A	41-1/2	1054	43-1/2	1105	45-1/2	1156	47	1194	53-5/8	1362
B	18-1/2	470	18-1/2	470	21-1/2	546	21-1/2	546	21-1/2	546
C	16-1/2	419	16-1/2	419	19-1/2	495	19-1/2	495	19-1/2	495
D	16-1/4	413	16-1/4	413	19-1/4	489	19-1/4	489	19-1/4	489

Unit Dimensions – Horizontal Position

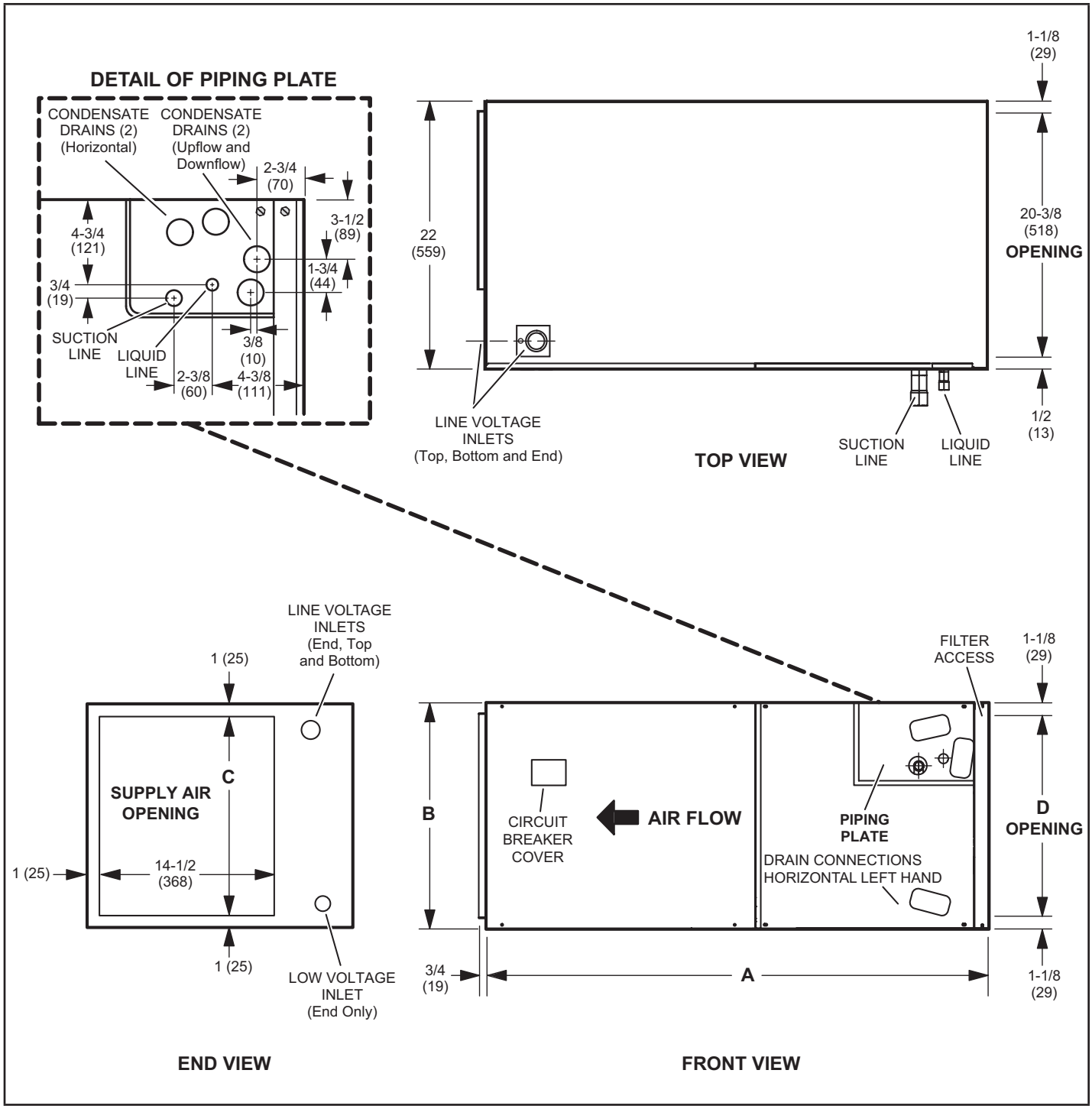

Dimensions	018, 024, 030		036		042		048		060	
	in.	mm	in.	mm	in.	mm	in.	mm	in.	mm
A	41-1/2	1054	43-1/2	1105	45-1/2	1156	47	1194	53-5/8	1362
B	18-1/2	470	18-1/2	470	21-1/2	546	21-1/2	546	21-1/2	546
C	16-1/2	419	16-1/2	419	19-1/2	495	19-1/2	495	19-1/2	495
D	16-1/4	413	16-1/4	413	19-1/4	489	19-1/4	489	19-1/4	489

⚠ WARNING

To prevent serious injury or death:

1. Lock-out/tag-out before performing maintenance.
2. If system power is required (e.g., smoke detector maintenance), disable power to blower, remove fan belt where applicable, and ensure all controllers and thermostats are set to the “OFF” position before performing maintenance.
3. Always keep hands, hair, clothing, jewelry, tools, etc. away from moving parts.

⚠ CAUTION

As with any mechanical equipment, contact with sharp sheet metal edges can result in personal injury. Take care while handling this equipment and wear gloves and protective clothing.

Installation Clearances

NON-DUCTED RETURN CLOSET INSTALLATION

The air handler can be installed in a closet with a false bottom to form a return air plenum. It may also be installed with a return air plenum under the air handler.

Louvers or return air grilles are field-supplied. Local codes may limit application of systems without a ducted return to single-story buildings.

When a CBK43UHET unit is installed in a closet with a louvered return opening, the minimum open area for the louvers will be

- 320 square inches for -018 and -024 models;
- 360 square inches for -030 and -036 models;
- 450 square inches for -042 thru -060 models

If the free area is not known, assume a 25% free area for wood or a 75% free area for metal louvers or grilles. Using the louver dimensions and the 25% or 75% assumption, determine if the open area meets the minimum open area listed above.

If a return air plenum is used, the return air grille should be immediately in front of the opening in the plenum to allow for the free flow of return air. When not installed in front of the opening, there must be adequate clearance around the air handler to allow for the free flow of return air.

Installation

Every working procedure that affects safety means shall only be carried out by competent persons. This appliance is not to be used by persons (including children) with reduced physical, sensory or mental capabilities, or lack of experience and knowledge, unless they have been given supervision or instruction concerning use of the appliance by a person responsible for their safety. Examples of such working procedures are breaking into the refrigerating circuit, opening of sealed components, and opening of ventilated enclosures.

- Work shall be undertaken under a controlled procedure so as to minimize the risk of a flammable gas or vapor being present while the work is being performed.
- The area shall be checked with an appropriate refrigerant detector prior to and during work, to ensure the technician is aware of potentially toxic or flammable atmospheres. Ensure that the leak detection equipment being used is suitable for use with all applicable refrigerants, i. e. non-sparking, adequately sealed or intrinsically safe.
- If any hot work is to be conducted on the refrigerating equipment or any associated parts, the appropriate fire extinguishing equipment shall be available to hand. Have a dry powder or CO2 fire extinguisher adjacent to the charging area.
- No person carrying out work in relation to a refrigerating system which involves exposing any pipe work shall use any sources of ignition in such a manner that it may lead to the risk of fire or explosion. All possible ignition sources, including cigarette smoking, should be kept sufficiently far away from the site of installation, repairing, removing and disposal, during which refrigerant can possibly be released to the surrounding space. Prior to work taking place, the area around the equipment is to be surveyed to make sure that there are no flammable hazards or ignition risks. “No Smoking” signs shall be displayed.
- Ensure that the area is in the open or that it is adequately ventilated before breaking into the system or conducting any hot work. A degree of ventilation shall continue during the period that the work is carried out. Ventilation should disperse any released refrigerant. When possible, expel refrigerant directly into the atmosphere.
- Pipe-work including piping material, pipe routing, and installation shall include protection from physical damage in operation and service, and be in compliance with national and local codes and standards
- All field joints shall be accessible for inspection prior to being covered or enclosed
- Where electrical components are being changed, they shall be fit for the purpose and to the correct specification. At all times the manufacturer’s maintenance and service guidelines shall be followed. If in doubt, consult the manufacturer’s technical department for assistance. The following checks shall be applied to installations using FLAMMABLE REFRIGERANTS as applicable:

1. The actual refrigerant charge is in accordance with the room size within which the refrigerant containing parts are installed.
2. The ventilation machinery and outlets are operating adequately and are not obstructed.
3. If an indirect refrigerating circuit is being used, the secondary circuit shall be checked for the presence of refrigerant.

4. Markings on the equipment should be visible and legible. Markings and signs that are illegible shall be corrected.
5. Refrigerating pipe or components are installed in a position where they are unlikely to be exposed to any substance which may corrode refrigerant containing components, unless the components are constructed of materials which are inherently resistant to being corroded or are suitably protected against being so corroded.

- For systems containing refrigerant, all repair and maintenance to electrical components shall include initial safety checks and component inspection procedures such as that capacitors are discharged in a safe manner to avoid possibility of sparking, that no live electrical components and wiring are exposed while charging, recovering, or purging the system, and that there is continuity of earth bonding. If a fault exists that could compromise safety, then no electrical supply shall be connected to the circuit until it is satisfactorily dealt with. If the fault cannot be corrected immediately but it is necessary to continue operation, an adequate temporary solution shall be used that is reported to the owner of the equipment, so all parties are advised.

NOTE *–Sealed electrical components shall be replaced, not repaired*.

NOTE *– Intrinsically safe components must be replaced, not repaired.*

NOTE *– All maintenance staff and others working in the local area shall be instructed on the nature of work being carried out with work in confined spaces being avoided.*

- Under no circumstances shall potential sources of ignition be used in the searching for or detection of refrigerant leaks. A halide torch (or any other detector using a naked flame) shall not be used. The following leak detection methods are deemed acceptable for all refrigerant systems. Electronic leak detectors may be used to detect refrigerant leaks but, in the case of flammable refrigerants, the sensitivity may not be adequate, or may need re-calibration. (Detection equipment shall be calibrated in a refrigerant-free area.) Ensure that the detector is not a potential source of ignition and is suitable for the refrigerant used. Leak detection equipment shall be set at a percentage of the LFL of the refrigerant and shall be calibrated to the refrigerant employed, and that 12.5 % refrigerant is confirmed. Leak detection fluids are also suitable for use with most refrigerants but the use of detergents containing chlorine shall be avoided as the chlorine may react with the refrigerant and corrode the copper pipe-work. If a leak is suspected, all naked flames shall be removed/ extinguished. If a leakage of refrigerant is found which requires brazing, all of the refrigerant shall be recovered from the system, or isolated (by means of shut off valves) in a part of the system remote from the leak.
- When breaking into the refrigerant circuit to make repairs – or for any other purpose – conventional procedures shall be used. However, for flammable refrigerants it is important that best practice be followed and, since flammability is a consideration, procedures such as safely remove refrigerant following local and national regulations, purging the circuit with inert gas, evacuating (optional for A2L), purging with inert gas (optional for A2L), or opening the circuit by cutting or brazing be adhered to. The refrigerant charge shall be recovered into the correct recovery cylinders if venting is not allowed by local and national codes. For appliances containing flammable refrigerants, the system shall be purged with oxygen-free nitrogen to render the appliance safe for flammable refrigerants. This process might need to be repeated several times. Compressed air or oxygen shall not be used for purging refrigerant systems. For appliances containing flammable refrigerants, refrigerants purging shall be achieved by breaking the vacuum in the system with oxygen-free nitrogen and continuing to fill until the working pressure is achieved, then venting to atmosphere, and finally pulling down to a vacuum (optional for A2L). This process shall be repeated until no refrigerant is within the system (optional for A2L). When the final oxygen-free nitrogen charge is used, the system shall be vented down to atmospheric pressure to be able to perform the required work. Ensure that the outlet for the vacuum pump is not close to any potential ignition sources and working area is well ventilated.

Each unit consists of a blower assembly, refrigerant coil, and controls in an insulated galvanized steel factory-finished enclosure. Knockouts are provided for electrical wiring entrance.

For ease in installation, it is best to make any necessary coil configuration changes before setting air handler in place.

REFRIGERANT METERING DEVICE

CBK43UHET units are equipped with a factory-installed check/ expansion valve.

UPFLOW APPLICATION

1 - Remove access panels and the corrugated padding between the blower and coil assembly. Discard the corrugated padding.

2 - The air handler must be supported on the bottom only and set on solid floor or field-supplied support frame. Securely attach the air handler to the floor or support frame.

3 - If installing a unit in an upflow application, remove the horizontal drain pan. **IMPORTANT - The horizontal drain pan is not required in upflow air discharge installations; its removal provides the best efficiency and air flow.**

4 - Place the unit in the desired location and slope unit. Connect return and supply air plenums as required using sheet metal screws.

5 - Install units that have no return air plenum on a stand that is at least 14” from the floor. This will allow proper air return

6 - For installations It is not required to connect the supply duct to the top flange. Top flange is removable by screws. Once the flange is removed replace the scews to ensure no air leakage.

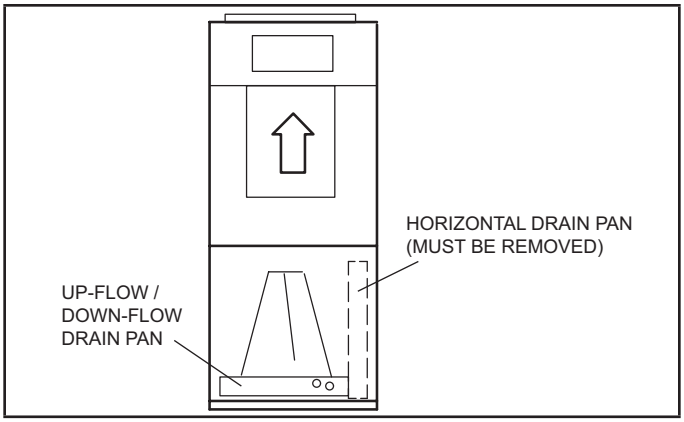

FIGURE 4. Upflow Configuration

HORIZONTAL APPLICATIONS

⚠ IMPORTANT

When removing the coil, there is a possibility of danger of equipment damage and personal injury. Be careful when removing the coil assembly from a unit installed in right- or left-hand applications. The coil may tip into the drain pan once it is clear of the cabinet. Support the coil when removing it..

NOTE *- When the unit is installed in horizontal applications, a secondary drain pan is recommended. Refer to local codes.*

NOTE *- This unit may be installed in left-hand or right-hand air discharge horizontal applications. Adequate support must be provided to ensure cabinet integrity. Ensure that there is adequate room to remove service and access panels if installing in the horizontal position.*

RIGHT-HAND DISCHARGE

1 - Remove access panels and the corrugated padding between the blower and coil assembly. Discard the corrugated padding.

2 - Determine which plugs are required for drain line connections.

3 - With access door removed, remove drain line plugs to install drain lines.

4 - Set unit so that it is sloped toward the upflow drain pan end of the unit and level from front to back of unit (see FIGURE 16).

5 - The horizontal configuration is shown in FIGURE 5.

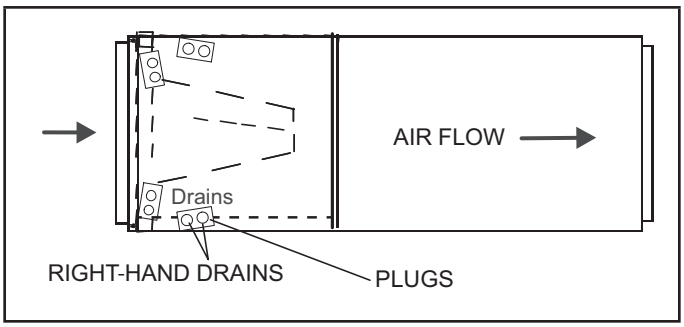

FIGURE 5. Right-Hand Discharge Configuration

6 - If the unit is suspended, the entire length of the cabinet must be supported. If you use a chain or strap, use a piece of angle iron or sheet metal attached to the unit (either above or below) to support the length of the cabinet. Use securing screws no longer than 1/2 inch to avoid damaging the coil or filter. See FIGURE 6. Use sheet metal screws to connect the return and supply air plenums as required.

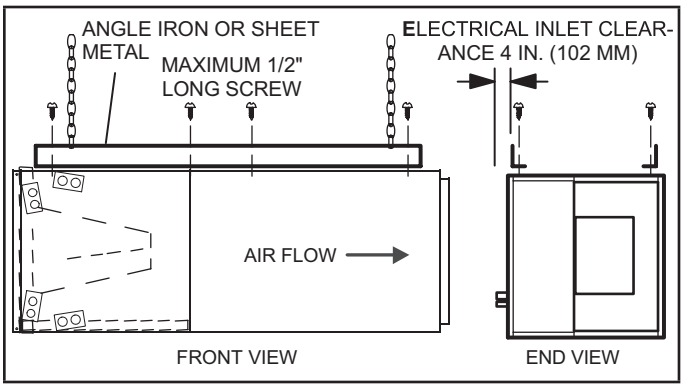

FIGURE 6. Suspending Horizontal Unit

LEFT-HAND AIR DISCHARGE

For horizontal left-hand air discharge, the following field modifications are required. Reference sticker on coil top plate.

1 - Remove access panels and the corrugated padding between the blower and coil assembly. Discard the corrugated padding.

2 - Pull the coil assembly from unit. Pull off the horizontal drain pan.

3 - Remove the drain plugs from back drain holes on horizontal drain pan and reinstall them on front holes.

⚠ IMPORTANT

After removal of drain pan plug(s), check drain hole(s) to verify that drain opening is fully open and free of any debris. Also check to make sure that no debris has fallen into the drain pan during installation that may plug up the drain opening.

4 - Rotate drain pan 180º front-to-back and install it on the opposite side of the coil.

5 - Remove screws from top cap and remove top cap from coil.

6 - Remove screws from front and back delta plate. Rotate horizontal drip shield 180 degrees and reattach screws to front back delta plate.

7 - Reattach top cap to coil using the same screws. See FIGURE 7

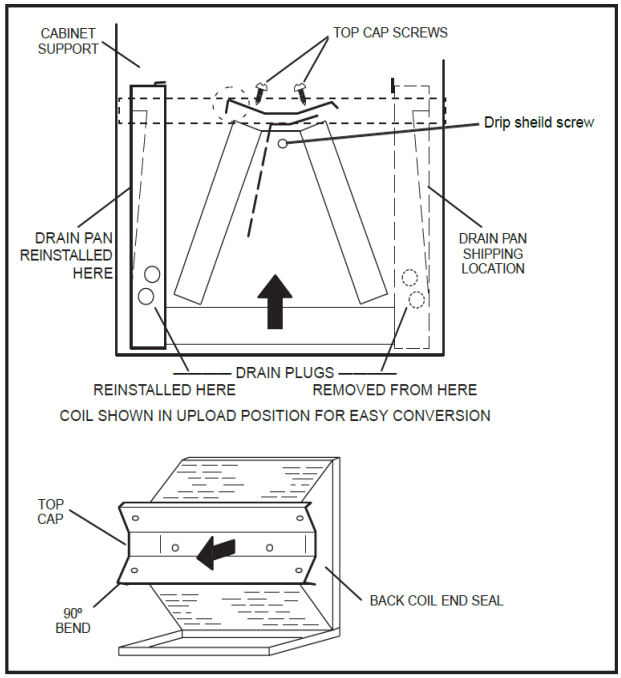

FIGURE 7. Field Modification for Left-Hand Discharge

NOTE – *Be very careful when reinstalling the screws into the coil end plate engaging holes. Misaligned screws may damage the coil.*

8 - From the upflow position, flip cabinet 90º to the left and set into place. Replace coil assembly.

9 - Knock out drain seal plastic grommet from access door.

10 - Set unit so that it is sloped shown in FIGURE 16. Connect return and supply air plenums as required using sheet metal screws.

11 - If suspending the unit, it must be supported along the entire length of the cabinet. If using chain or strap, use a piece of angle iron or sheet metal attached to the unit (either above or below) so that the full length of the cabinet is supported. Use securing screws no longer than 1/2" to avoid damage to coil or filter, as illustrated in FIGURE 6. Connect return and supply air plenums as required using sheet metal screws.

DOWNFLOW APPLICATION

NOTE – *If downflow application is required, separately order kit number 31U56 and install per kit's instructions. Also use metal or class I supply and return air plenums.*

Use the installation instruction provided with the downflow kit.

⚠ IMPORTANT

If electric heat section with circuit breakers (ECB45) is installed in a CBK43UHET unit in a downflow application, the circuit breakers must be rotated 180° to the UP position. See ECB45 installation instructions for more details.

Sensor / Bracket Installation

Upflow Configuration

Leak detection sensor and bracket are factory-installed for upflow installation. No sensor relocation is required if installing in upflow configuration.

NOTE *– The leak detection sensor needs to be relocated for horizontal right, horizontal left, and downflow configurations.*

Horizontal Right Configuration

1 - Remove sensor bracket assembly from vertical position (shown in FIGURE 8). Do not remove sensor from bracket, and do not disconnect or reroute sensor wire from the control panel area.

2 - Follow instructions for right-hand discharge as outlined in previous section on page 13.

3 - With air handler unit panels removed, install sensor bracket assembly to the unit by lining up holes in the center support bracket as shown in FIGURE 9. Note: sensor should be facing toward the inside of the unit.

4 - Loop any excess wire through the plastic "M" wire clip located on the inside of the center support bracket.

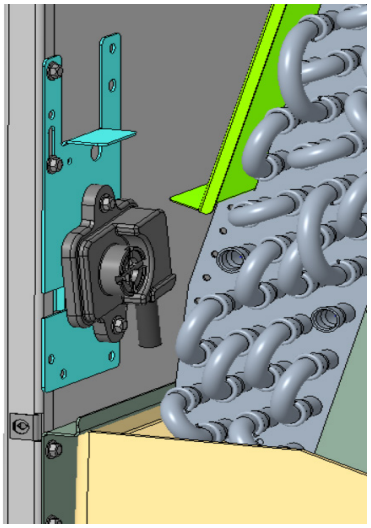

FIGURE 8

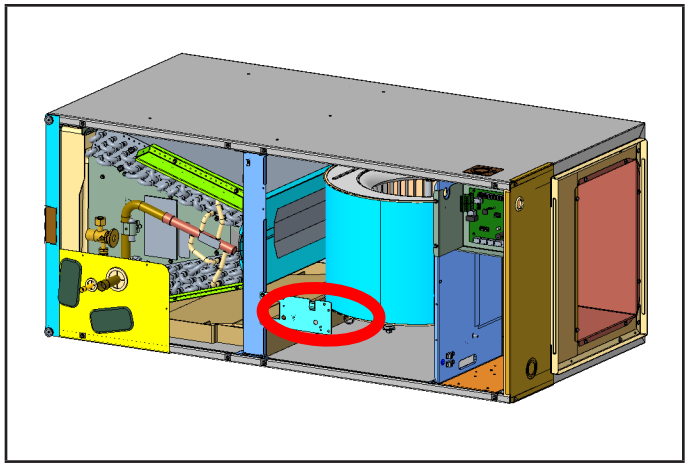

FIGURE 9

Horizontal Left Configuration

1 - Remove sensor bracket assembly from vertical position. Do not remove sensor from bracket, and do not disconnect or reroute sensor wire from the control panel area. Set the sensor bracket assembly aside.

2 - Follow instructions for left-hand discharge as outlined in previous section on page 13 and 14.

3 - After coil assembly and center support bracket are reinstalled into unit, with air handler unit panels removed, install sensor bracket assembly to the center support bracket by lining up the holes as shown in FIGURE 12.

4 - Ensure sensor wire routes to the right hand side, as viewed from the front of the unit. The wire must route through the slotted opening in the center support bracket. See FIGURE 10 and FIGURE 11.

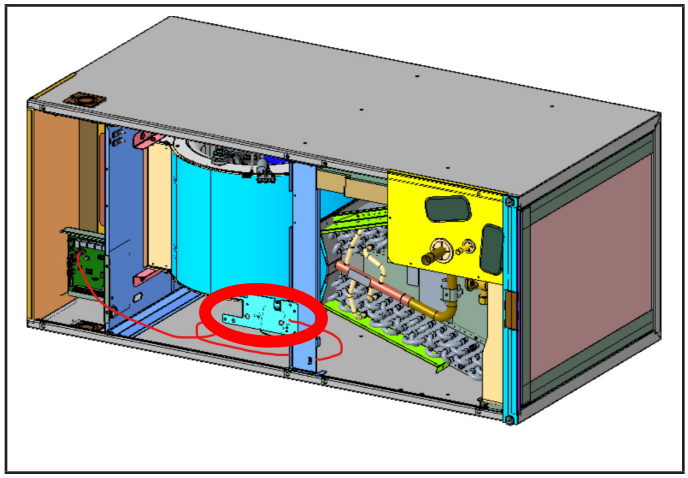

FIGURE 10

5 - Loop any excess wire through the plastic “M” wire clip located on the inside of the center support bracket.

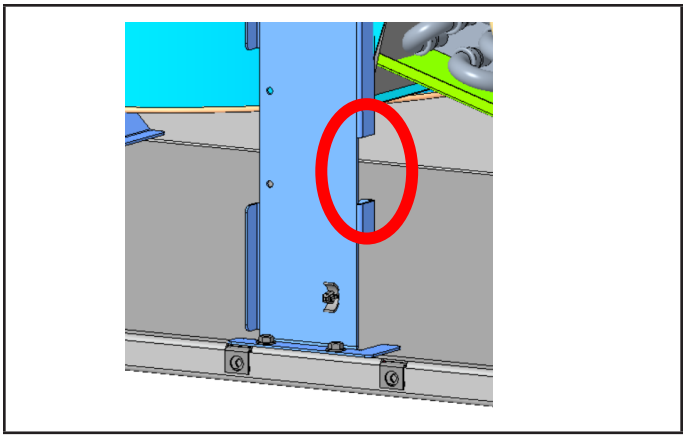

FIGURE 11

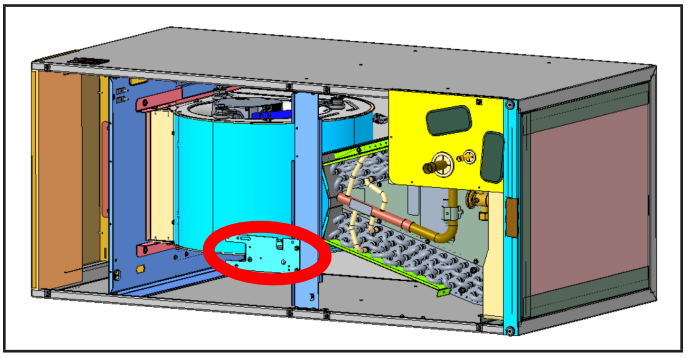

FIGURE 12

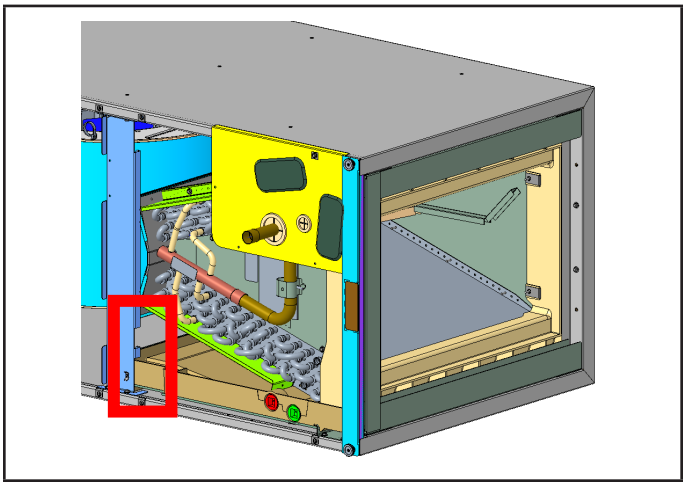

FIGURE 13

Downflow Configuration

1 - Remove sensor bracket assembly from vertical position. Do not remove sensor from bracket, and do not disconnect or reroute sensor wire from the control panel area. Set the sensor bracket assembly aside.

2 - Follow the downflow conversion installation instructions located in the downflow installation kit (ordered separately).

NOTE *– Refer to the downflow kit installation instructions for more details on unit configuration.*

3 - With air handler access panels removed, install sensor bracket assembly to the side of the cabinet by lining up holes as shown in FIGURE 14

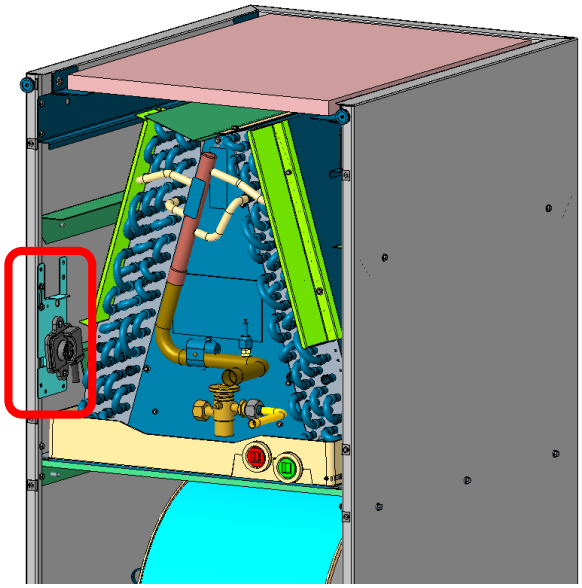

FIGURE 14

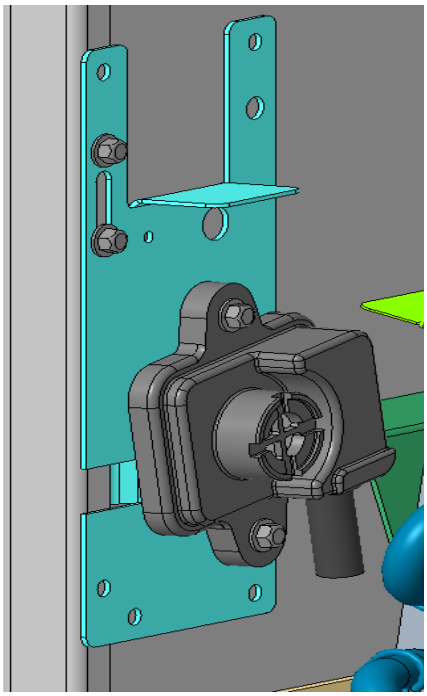

FIGURE 14 (Detail)

4 - Loop and bundle any excess sensor wire with a wire tie.

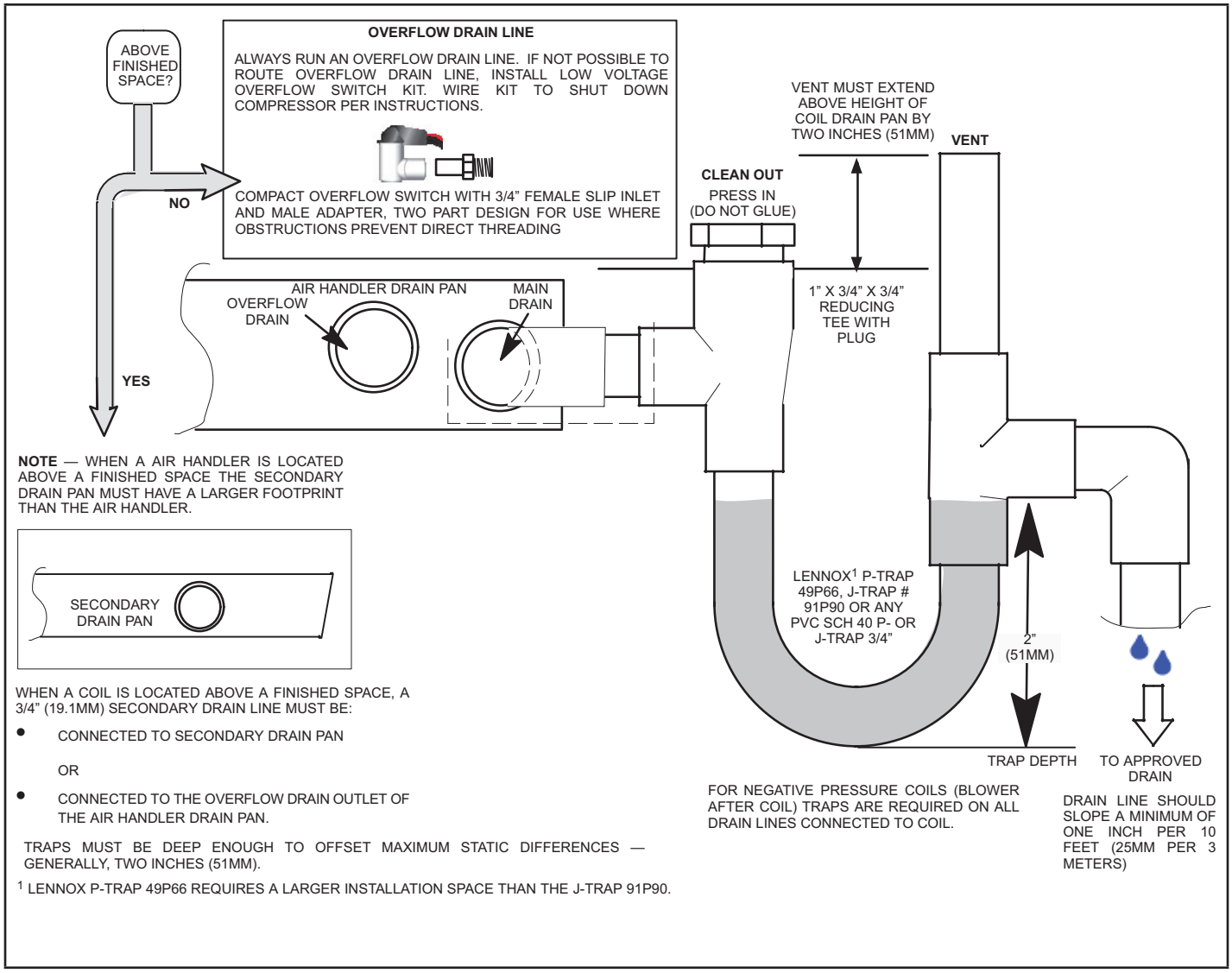

FIGURE 15. Typical Main and Overflow Drain

⚠ IMPORTANT

A field-fabricated secondary drain pan, with a drain pipe to the outside of the building, is required in all installations over a finished living space or in any area that may be damaged by overflow from the main drain pan. In some localities, local codes may require a secondary drain pan for any horizontal installation.

SLOPING THE UNIT

Make sure the unit is sloped (similar to the slope shown in FIGURE 16) so that the drain pan will empty completely without water standing in the pan.

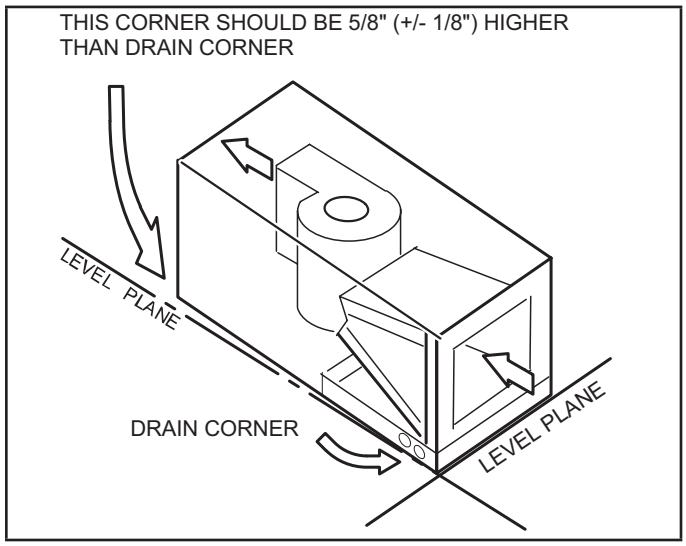

FIGURE 16. Sloping the Unit for Proper Drainage

INSTALL CONDENSATE DRAIN

The air handler is provided with 3/4” NPT condensate drain connections.

⚠ IMPORTANT

Confirm primary and secondary drains are open.

1 - CBK43UHET units are equipped with a drain pan, which includes green (main drain) and red (secondary drain) plugs. Unscrew the plugs to remove them before inserting condensate drain fittings.

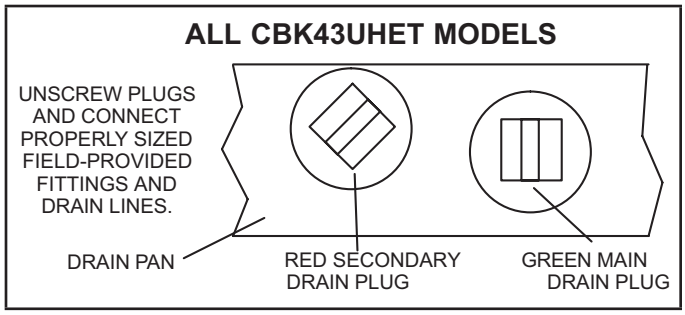

FIGURE 17. Drain Line Connections

2 - Install properly sized, field-provided connection fittings and connect primary drain line to the main drain pan connection.

NOTE *- When installing drain line connection fittings to the drain pan, hand tighten the fitting and use a thread sealant. Over-tightening the fittings can split connections on the drain pan.*

3 - If the secondary drain line is to be used, remove the plug or the knockout and route the drain line so that water draining from the outlet will be easily noticed by the homeowner. Refer to local codes for drain trap requirements on the secondary drain line.

4 - Check again to ensure drain ports and drain pan are free of all debris.

5 - Plug and check any unused drain pan openings for tightness. Torque plugs to 30 in. lb. to prevent water leaks or see page from the drain pan.

6 - Install a 2” trap in the main (primary) drain lines as close to the unit as practical (see FIGURE 15). Make sure the top of the trap is below the connection to the drain pan to allow complete drainage of the pan.

NOTE *- Horizontal runs must have an anti-siphon air vent (standpipe) installed ahead of the horizontal run. See FIGURE 15. An extremely long horizontal run may require an oversized drain line to eliminate air traps.*

NOTE *- Do not operate air handler without a trap in the main (primary) drain. The condensate drain is on the negative pressure side of the blower; therefore, air being pulled through the condensate line will not allow positive drainage without a proper trap.*

7 - Route the drain line to the outside or to an appropriate drain. Drain lines must be installed so they do not block service access to the front of the air handler. A 24” clearance is required for filter, coil, or blower removal and service access.

NOTE *- Check local codes before connecting the drain line to an existing drainage system. Insulate the drain lines where sweating could cause water damage.*

TEST CONDENSATE DRAIN

Test the drain pan and drain line after installation:

1 - Pour several quarts of water into drain pan. Use enough water to fill both the drain trap and the line.

2 - Check the installed drain pan. Drain pan must be draining completely. Drain line fittings must not be leaking. Water must be draining from the end of the primary drain line.

3 - Correct any leaks found.

Duct System and Filters

DUCT SYSTEM

The air handler is provided with flanges for the connection of the supply plenum.

Supply and return duct system must be adequately sized to meet the system’s air requirements and static pressure capabilities. The duct system should be insulated with a minimum of 1” thick insulation with a vapor barrier in conditioned areas or 2” minimum in unconditioned areas.

Supply plenum should be the same size as the flanged opening provided around the blower outlet and should extend at least 3 ft. from the air handler before turning or branching off plenum into duct runs. The plenum forms an extension of the blower housing and minimizes air expansion losses from the blower.

FILTERS

A filter is provided. TABLE 3 lists the filter size for each unit.

TABLE 3

CBK43UHET	Filter Size – In.
-018, -024, -030, -036	15" x 20" x 1"
-042, -048, -060	18" x 20" x 1"

⚠ IMPORTANT

If a high efficiency filter is being installed as part of this system to ensure better indoor air quality, the filter must be properly sized. High efficiency filters have a higher static pressure drop than standard efficiency glass/foam filters. If the pressure drop is too great, system capacity and performance may be reduced. Before using any filter with this system, check the specifications provided by the filter manufacturer against the data given in the appropriate Lennox Product Specifications bulletin. Additional information is provided in Service and Application Note ACC002 (August 2000)..

INSTALLING DUCT SYSTEM

Connect supply air duct to the flange on top of the air handler. If an isolation connector is used, it must be nonflammable.

FIELD-FABRICATED RETURN AIR DUCT FLANGE FOR HORIZONTAL APPLICATIONS

A return air duct system is recommended, but not factory-provided. If the unit is installed in a confined space or closet, run a full-size return connection to a location outside the closet.

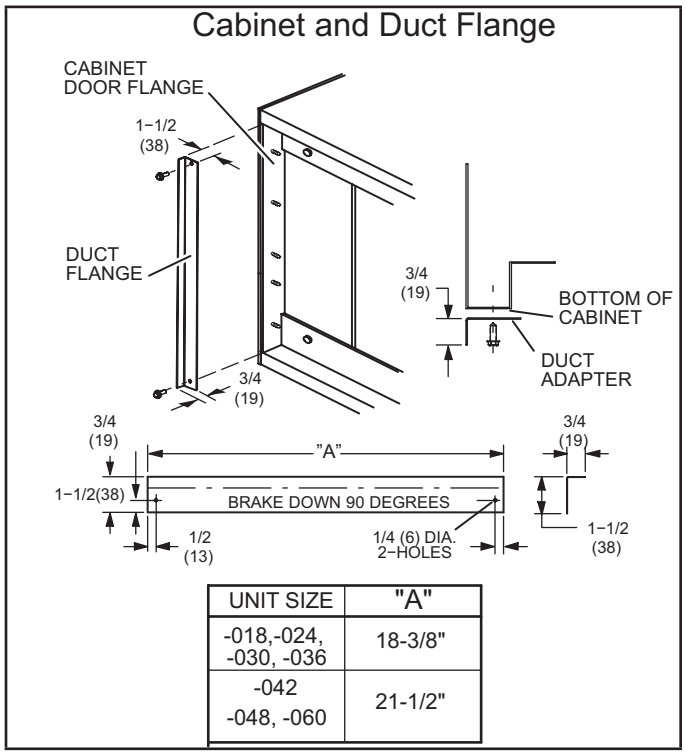

UNIT SIZE	"A"
-018,-024, -030, -036	18-3/8"
-042 -048, -060	21-1/2"

FIGURE 18. Cabinet and Duct Flange

Brazing Refrigerant Lines

⚠ IMPORTANT

Braze-free fittings must conform with UL207 or ISO14903 (latest edition).

Refrigerant lines must be connected by a qualified technician in accordance with established procedures.

⚠ IMPORTANT

Refrigerant lines must be clean, dry, refrigerant-grade copper lines. Air handler coils should be installed only with specified line sizes for approved system combinations.

Handle the refrigerant lines gently during the installation process. Sharp bends or kinks in the lines will cause a restriction.

Do not remove the caps from the lines or system connection points until connections are ready to be completed.

⚠ WARNING

Polyol ester (POE) oils used with R-454B refrigerant absorb moisture very quickly. It is very important that the refrigerant system be kept closed as much as possible. DO NOT remove line set caps or service valve stub caps until you are ready to make connections.

⚠ WARNING

Danger of fire. Bleeding the refrigerant charge from only the high side may result in pressurization of the low side shell and suction tubing. Application of a brazing torch to a pressurized system may result in ignition of the refrigerant and oil mixture. Check the high and low pressures before applying heat.

⚠ WARNING

When using a high pressure gas such as nitrogen to pressurize a refrigeration or air conditioning system, use a regulator that can control the pressure down to 1 or 2 psig (6.9 to 13.8 kPa).

⚠ CAUTION

Brazing alloys and flux contain materials which are hazardous to your health.

Avoid breathing vapors or fumes from brazing operations. Perform operations only in well-ventilated areas.

Wear gloves and protective goggles or face shield to protect against burns.

Wash hands with soap and water after handling brazing alloys and flux.

⚠ IMPORTANT

To prevent the build-up of high levels of nitrogen when purging, it must be done in a well-ventilated area. Purge low-pressure nitrogen (1 to 2 psig) through the refrigerant piping during brazing. This will help to prevent oxidation and the introduction of moisture into the system.

Refrigerant system installations shall be installed and tested per ASHRAE Standard 15.2, Section 10.0 (latest edition).

***NOTE** - When installing refrigerant lines longer than 50 feet, see the Lennox Refrigerant Piping Design and Fabrication Guidelines, CORP. 9351-L9, or contact Lennox Technical Support Product Applications for assistance. To obtain the correct information from Lennox, be sure to communicate the following information: Model and capacity.*

1 - Route the suction and liquid lines from the fittings on the indoor coil to the fittings on the outdoor unit. Run the lines in a direct path, avoiding unnecessary turns and bends.

2 - Make sure that the suction line is insulated over the entire exposed length and that neither suction nor liquid lines are in direct contact with floors, walls, duct system, floor joists, or other piping.

3 - To avoid damaging the rubber grommets in the cabinet while brazing, slide the rubber grommets over the refrigerant lines until they are away from the heat source.

NOTE *- Place wet rags against piping plate, piping stubs and expansion valve.*

4 - Connect the suction and liquid lines to the evaporator coil. Take care to protect the cabinet and internal components as detailed in FIGURE 19.

5 - Braze using an alloy of silver or copper and phosphorus with a melting point above 1,100°F (593°C).

NOTE *- Do not use soft solder.*

6 - Allow refrigerant pipes to cool to room temperature.

NOTE *- Make sure to route copper refrigerant tubing away from sharp edges and make sure that it does not touch other metal surfaces. This prevents damage caused by vibration or metal-on-metal contact*.

7 - Reinstall the rubber grommets into the refrigerant piping panel.

NOTE *- Make sure expansion valve capillary tube is not touching metal edges or copper tubing.*

8 - Make sure outdoor unit has been placed according to the Installation Instructions and is connected to the refrigerant lines.

Multiple Systems Installed in Same Space

If multiple systems are installed in the same confined space, and at least one of the systems has A2L refrigerant and an exposed joint (not covered by line set sleeve), then all non-direct vent furnaces in the same space must have a refrigerant detection system with a sensor installed below the level of the burners.

If refrigerant sensor is required, it shall be mounted as follows:

Upflow Applications: Mounted on an unused side furnace return air connection at least 9 inches above the floor and within 9 inches from front of furnace.

Horizontal Applications: Mounted on the lower section of the side return furnace air connection, within 9 inches of both the blower deck and front of furnace.

Downflow Applications: Mounted on one side of the evaporator coil 9 inches above the floor and within 9 inches from front of coil.

⚠ IMPORTANT

After completion of field piping for split systems, the field pipework shall be pressure tested with an inert gas and then vacuum tested prior to refrigerant charging, according to the following requirements;

– Field-made refrigerant joints indoors shall be tightness tested. The test method shall have a sensitivity of 5 grams per year of refrigerant or better under a pressure of at least 0,25 times the maximum allowable pressure marked on unit nameplate.

No leak shall be detected.

PLEASE READ IMPORTANT ISSUES CONCERNING BRAZING OPERATIONS ON PREVIOUS PAGES BEFORE PROCEEDING.

NOTE - *REFER TO OUTDOOR UNIT INSTALLATION INSTRUCTIONS FOR REFRIGERANT PIPING SIZE REQUIREMENTS.*

NOTE - *Use silver alloy brazing rods with five or six percent minimum silver alloy for copper-to-copper brazing, 45 percent alloy for copper-to-brass and copper-to-steel brazing.*

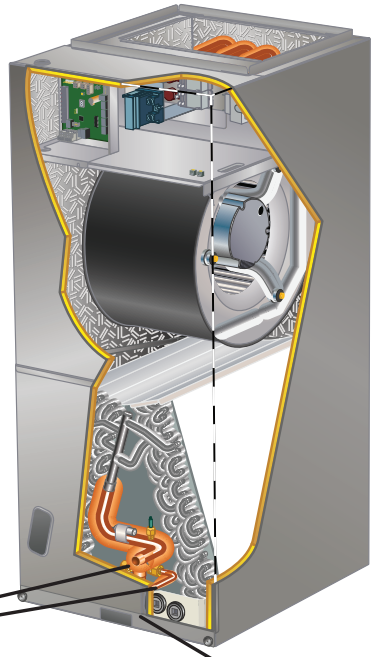

A REMOVE ACCESS PANEL

B REMOVE RUBBER PLUG FROM BOTH LIQUID AND SUCTION LINES
NOTE - *CBK43 SERIES UNITS USE NITROGEN OR DRY AIR AS A HOLDING CHARGE. IF THERE IS NO PRESSURE WHEN THE RUBBER PLUGS ARE REMOVED, CHECK THE COIL FOR LEAKS BEFORE INSTALLING.*

C EITHER REMOVE OR PUSH PIPE WRAPPING BACK THROUGH HOLE IN PIPING PLATE BEFORE LINE SET CONNECTION AND BRAZING.

D CONNECT PIPES
NOTE - *REFRIGERANT LINE SETS SHOULD BE ROUTED TO ALLOW FILTER ACCESSIBILITY.*

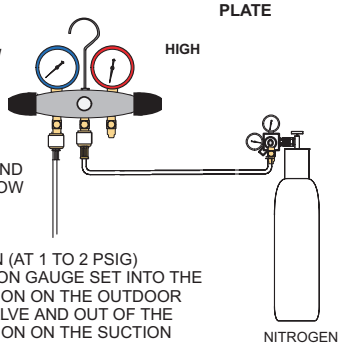

E CONNECT GAUGES AND START NITROGEN FLOW

FLOW REGULATED NITROGEN (AT 1 TO 2 PSIG) THROUGH THE REFRIGERATION GAUGE SET INTO THE VALVE STEM PORT CONNECTION ON THE OUTDOOR UNIT LIQUID LINE SERVICE VALVE AND OUT OF THE VALVE STEM PORT CONNECTION ON THE SUCTION SERVICE VALVE.

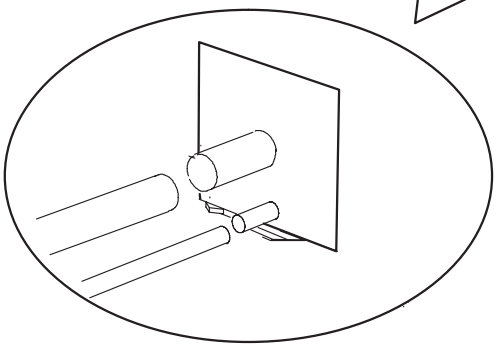

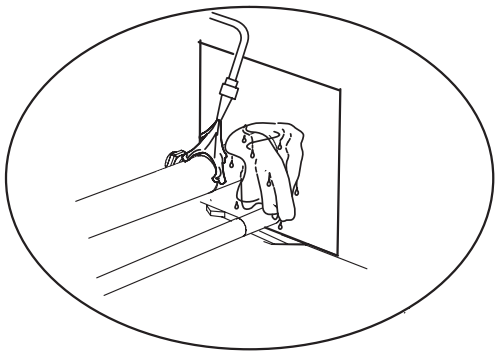

F PLACE A WET RAG AGAINST PIPING PLATE AND AROUND THE SUCTION LINE CONNECTION.

G BRAZE CONNECTION. ALLOW PIPE TO COOL BEFORE REMOVING WET RAG FROM CTXV SENSING BULB AND PIPING PANEL AREA.

H REPEAT PREVIOUS PROCEDURE FOR LIQUID LINE.

REFER TO INSTRUCTIONS PROVIDED WITH OUTDOOR UNIT FOR LEAK TESTING, EVACUATING AND CHARGING PROCEDURES.
REFRIGERANT SYSTEM INSTALLATIONS SHALL BE INSTALLED AND TESTED PER ASHRAE STANDARD 15.2, SECTION 10.0 (LATEST EDITION).

FIGURE 19. Brazing Connections

Sealing the Unit

Seal the unit so that warm air is not allowed into the cabinet. Warm air introduces moisture, which results in water blow-off problems. This is especially important when the unit is installed in an unconditioned area.

If installed in an unconditioned space, sealant should be applied around the electrical wires, refrigerant tubing, and condensate lines where they enter the cabinet.

⚠ WARNING

There must be an airtight seal between the bottom of the air handler and the return air plenum. Use fiberglass sealing strips, caulking, or equivalent sealing method between the plenum and the air handler cabinet to ensure a tight seal. Return air must not be drawn from a room where this air handler or any gas-fueled appliance (i.e., water heater), or carbon monoxide-producing device (i.e., wood fireplace) is installed.

⚠ IMPORTANT

Use duct tape and/ or Permagum to seal closed any space around the holes where the drain lines exit the cabinet. Warm air must not be allowed to enter through any gaps or holes in the cabinet.

Electrical Connections

⚠ WARNING

Electric shock hazard! - Disconnect all power supplies before servicing.

Replace all parts and panels before operating.

Failure to do so can result in death or electrical shock.

⚠ WARNING

Run 24V Class II wiring only through specified low voltage opening. Run line voltage wiring only through specified high voltage opening. Do not combine voltage in one opening.

⚠ WARNING

Electric Shock Hazard. Can cause injury or death. Unit must be properly grounded in accordance with national and local codes.

Line voltage is present at all components when unit is not in operation on units with single-pole contactors. Disconnect all remote electric power supplies before opening access panel. Unit may have multiple power supplies.

⚠ WARNING

Electric Shock Hazard.

Can cause injury or death.

Foil-faced insulation has conductive characteristics similar to metal. Be sure there are no electrical connections within 1/2" of the insulation. If the foil-faced insulation comes in contact with electrical voltage, the foil could provide a path for current to pass through to the outer metal cabinet. While the current produced may not be enough to trip existing electrical safety devices (e.g., fuses or circuit breakers), the current can be enough to cause an electrical shock hazard that could cause personal injury or death.

- Wiring must conform to the current National Electric Code ANSI/NFPA No. 70, or Canadian Electric Code Part I, CSA Standard C22.1, and local building codes. Refer to following wiring diagrams. See unit nameplate for minimum circuit ampacity and maximum over-current protection size.
- Electrical wiring, disconnect means and over-current protection are to be supplied by the installer. Refer to the air handler rating plate for maximum over-current protection, minimum circuit ampacity, as well as operating voltage. Select the proper supply circuit conductors in accordance with tables 310-16 and 310-17 in the National Electric Code, ANSI/NFPA No. 70 or tables 1 through 4 in the Canadian Electric Code, Part I, CSA Standard C22.1.
- The power supply must be sized and protected according to the specifications supplied on the product.
- This air handler is factory-configured for 230 volt, single phase, 60 cycles. For 208-volt applications, see “208 Volt Conversion” later in this section. For 115-volt applications, see “115 Volt Conversion” later in this section.
- Separate openings have been provided for 24V low voltage and line voltage. Refer to the dimension illustration of specific location.
- This unit is provided with holes for conduit. Use provided caps to seal holes not used.
- Typical unit wiring (as well as wiring of optional field-installed electric heat) is given in FIGURE 1. Refer to the instructions provided with the electric heat section for proper installation.

⚠ WARNING

USE COPPER CONDUCTORS ONLY

1 - Disconnect all power supplies.
2 - Remove the air handler access panel.
3 - Route the field supply wires to the air handler electrical connection box.

4 - Use UL-listed wire nuts to connect the field supply conductors to the unit black and yellow leads, and the ground wire to ground terminal marked GND.

5 - Replace the air handler access panel.

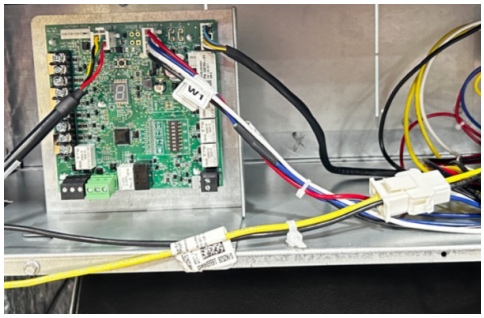

FIGURE 20. 230V Power Connection Plug

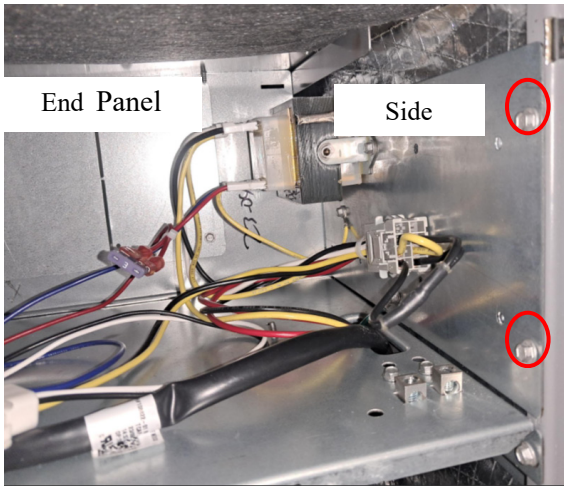

FIGURE 21. Electrical Connections (Upflow Configuration)

Control Panel Relocation

To avoid the possibility of moisture damage to the control in some right-hand discharge configurations, the control panel can be relocated to the end panel as shown in FIGURE 21.

1 - Remove the two screws that secure the control panel to the cabinet. See FIGURE 21. Slide panel out.

2 - Slide the control panel into the notch on the electric heat mounting panel (FIGURE 22). Using the screws removed in Step 1, secure the control panel to the end panel, as shown in FIGURE 23.

⚠ WARNING

Electrically ground air handler. Connect ground wire to ground terminal marked "GND".

Failure to do so can result in death or electrical shock.

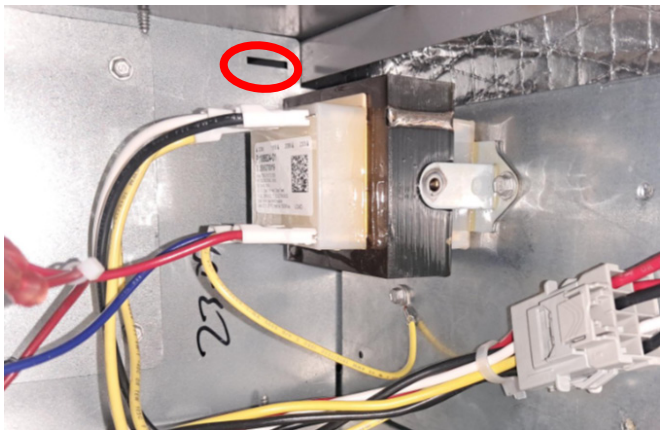

FIGURE 22. Notch for Control Panel Relocation

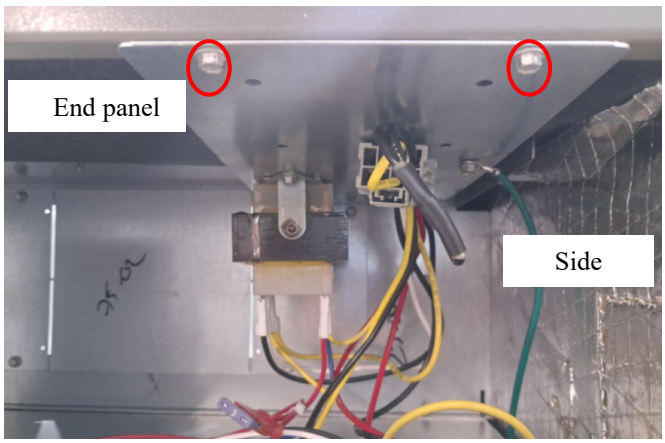

FIGURE 23. Control Panel Relocated to End Panel (Horizontal-Right Configuration)

208 VOLT CONVERSION

1 - Disconnect all power supplies.

2 - Remove the air handler access panel.

3 - Using the wiring diagram located on the unit access panel as a reference, move the connected black transformer leads from the 230 volt terminal on the transformer to the 208 volt terminal on the transformer.

FIGURE 24. Converting Unit from 230VAC to 208VAC

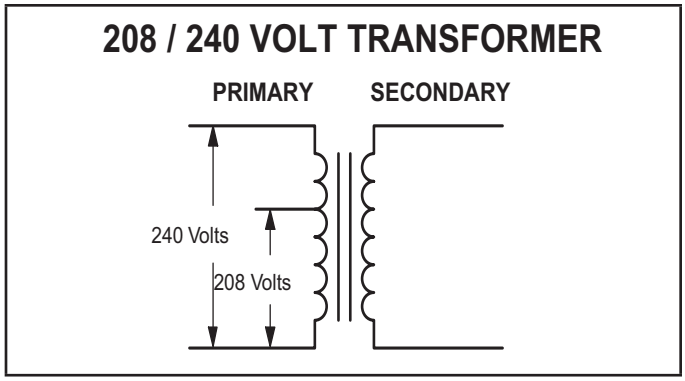

FIGURE 25 Converting Unit from 240VAC to 208V AC

115 VOLT CONVERSION

1 - Disconnect all power supplies.

2 - Unplug the 230V factory installed jumper plug harness from the 8-pin gray jack plug and discard. SEE FIGURE 26.

3 - Plug the 115V power wiring harness with the gray male jack plug (found in the bag assembly) with the black and white pig tail leads. See FIGURE 27.

4 - Connect 115V incoming power supply to the black and white pigtail leads to the 115V power wiring harness with jack plug. Connect the ground to the ground lug on the unit.

NOTE - *115V applications cannot use electric heat.*

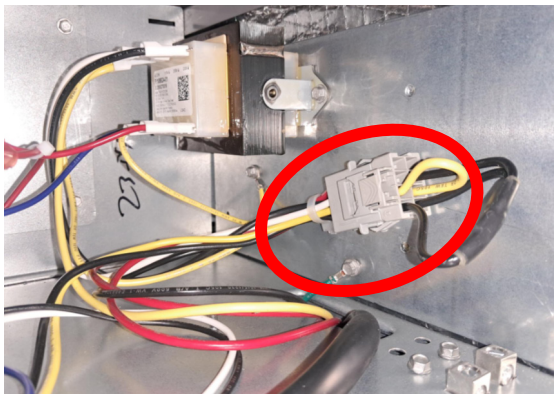

FIGURE 26. Converting Unit from 230VAC to 115VAC

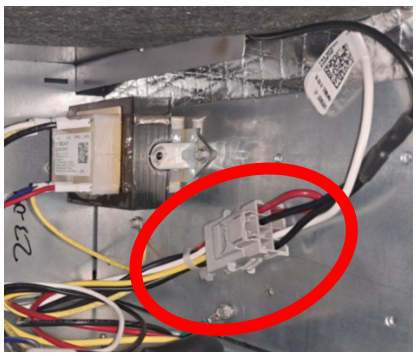

FIGURE 27. Converting Unit from 230VAC to 115VAC

⚠ IMPORTANT

This unit is approved for installation clearance to combustible material as stated on the unit rating plate. Accessibility and service clearances must take precedence over combustible material clearances.

The air handler must be installed so that free access is allowed to the coil/filter compartment and blower/ control compartment.

Check-out Procedures

NOTE – *Refer to outdoor unit installation instructions for system start-up instructions and refrigerant charging instructions.*

PRE-START-UP CHECKS

- Is the air handler properly and securely installed?
- If horizontally configured, is the unit sloped up to 5/8 inch toward drain lines?
- Will the unit be accessible for servicing?
- Has an auxiliary pan been provided under the unit with separate drain for units installed above a finished ceiling or in any installation where condensate overflow could cause damage?
- Have ALL unused drain pan ports been properly plugged?
- Has the condensate line been properly sized, run, trapped, pitched, and tested?
- Is the duct system correctly sized, run, sealed, and insulated?
- Have all cabinet openings and wiring been sealed?
- Is the indoor coil factory-installed TXV properly sized for the outdoor unit being used?
- Have all unused parts and packaging been disposed of?
- Is the filter clean, in place, and of adequate size?
- Is the wiring neat, correct, and in accordance with the wiring diagram?
- Is the unit properly grounded and protected (fused)?
- Is the thermostat correctly wired and in a good location?
- Are all access panels in place and secure?
- Verify voltage and connection.

CHECK BLOWER OPERATION

- Set thermostat to FAN ON.
- The indoor blower should come on.

CHECK COOLING OPERATION

- Set thermostat to force a call for cooling (approximately 5ºF lower than the indoor ambient temperature).
- The outdoor unit should come on immediately and the indoor blower should start between 30 - 60 seconds later.
- Check the air flow from a register to confirm that the system is moving cooled air.
- Set the thermostat 5ºF higher than the indoor temperature. The indoor blower and outdoor unit should cycle off.

CHECK ELECTRIC HEAT (IF USED)

- Set thermostat to call for auxiliary heat (approximately 5°F above ambient temperature). The indoor blower and auxiliary heat should come on together. Allow a minimum of 3 minutes for all sequencers to cycle on.
- Set the thermostat so that it does not call for heat. Allow up to 5 minutes for all sequencers to cycle off.

Operation

Cooling (Cooling Only or Heat Pump)

On all models, the 24 volt line will go directly to the RDS contol board from the transformer. The normally open contacts close, causing the indoor blower motor to operate; depending on the indoor blower motor, there may be a delay. The circuit between R and Y is completed, closing the circuit to the contactor in the outdoor unit, starting the compressor and outdoor fan motor.

On heat pumps, circuit R and O energizes the reversing valve, switching the valve to the cooling position. (The reversing valve remains energized as long as the thermostat selector switch is in the COOL position.)

At the completion of the cooling demand, the indoor blower and outdoor unit should cycle off. Air handler should cycle off 45 seconds after the outdoor unit shuts off.

Heating (Electric Heat Only)

When the thermostat calls for heat, the circuit between R and W is completed, and the heat sequencer is energized. A time delay follows before the heating elements and the indoor blower motor come on. Units with a second heat sequencer can be connected with the first sequencer to W on the thermostat sub-base, or they may also be connected to a second stage on the sub-base.

Heating (Heat Pump)

On all models, the 24 volt line will go directly to the terminal board from the transformer. The normally open contacts close, causing the indoor blower motor to operate; depending on the indoor blower motor, there may be a delay. The circuit between R and Y is completed, closing the circuit to the contactor in the outdoor unit, starting the compressor and outdoor fan motor.

If the room temperature continues to decrease, the circuit between R and W1 is completed by the second-stage heat room thermostat. Circuit R-W1 energizes a heat sequencer. The completed circuit will energize supplemental electric heat (if applicable).

Units with a second heat sequencer can be connected with the first sequencer to W1 on the thermostat. They may also be connected to a second heating stage W2 on the thermostat sub-base.

Emergency Heat (Heating Heat Pump)

If the selector switch on the thermostat is set to the emergency heat position, the heat pump will be locked out of the heating circuit, and all heating will be electric heat (if applicable). A jumper should be placed between W2 and E on the thermostat sub-base so that the electric heat control will transfer to the first-stage heat on the thermostat. This will allow the indoor blower to cycle on and off with the electric heat when the fan switch is in the AUTO position.

Homeowner Maintenance

⚠ IMPORTANT

Do not operate system without a filter. A filter is required to protect the coil, blower, and internal parts from excessive dirt and dust. The filter is placed in the return duct by the installer.

- Inspect air filters at least once a month and replace or clean as required. Dirty filters are the most common cause of inadequate heating or cooling performance.
- Replace disposable filters. Cleanable filters can be cleaned by soaking in mild detergent and rinsing with cold water.
- Install new/clean filters with the arrows on the side pointing in the direction of air flow. Do not replace a cleanable (high velocity) filter with a disposable (low velocity) filter unless return air system is properly sized for it.
- If water should start coming from the secondary drain line, a problem exists which should be investigated and corrected. Contact a qualified service technician.

Repairing or Replacing Cabinet Insulation

⚠ IMPORTANT

DAMAGED INSULATION MUST BE REPAIRED OR REPLACED before the unit is put back into operation. Insulation loses its insulating value when wet, damaged, separated or torn.

Matte- or foil-faced insulation is installed in indoor equipment to provide a barrier between outside air conditions (surrounding ambient temperature and humidity) and the varying conditions inside the unit. If the insulation barrier is damaged (wet, ripped, torn or separated from the cabinet walls), the surrounding ambient air will affect the inside surface temperature of the cabinet.

The temperature/humidity difference between the inside and outside of the cabinet can cause condensation on the inside or outside of the cabinet which leads to sheet metal corrosion and, subsequently, component failure.

REPAIRING DAMAGED INSULATION

Areas of condensation on the cabinet surface are an indication that the insulation is in need of repair.

If the insulation in need of repair is otherwise in good condition, the insulation should be cut in an X pattern, peeled open, glued with an appropriate all-purpose glue and placed back against the cabinet surface, being careful to not overly compress the insulation so the insulation can retain its original thickness. If such repair is not possible, replace the insulation. If using foil-faced insulation, any cut, tear, or separations in the insulation surface must be taped with a similar foil-faced tape.

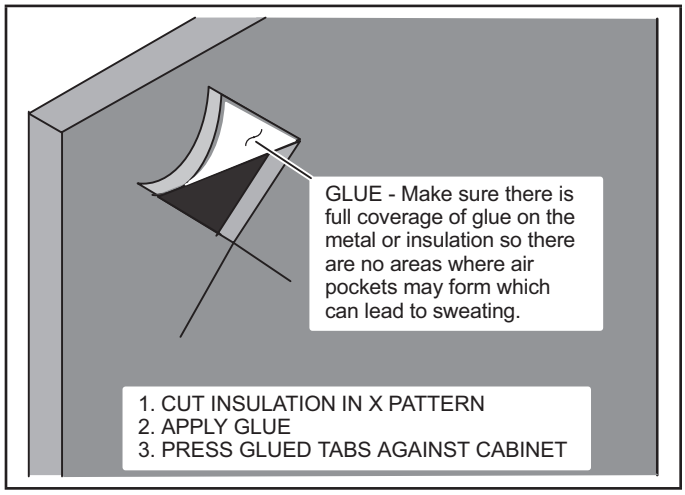

FIGURE 28. Repairing Insulation

Professional Maintenance

NOTICE !

Failure to follow instructions will cause damage to the unit.

This unit is equipped with an aluminum coil. Aluminum coils may be damaged by exposure to solutions with a pH below 5 or above 9. The aluminum coil should be cleaned using potable water at a moderate pressure (less than 50psi). If the coil cannot be cleaned using water alone, Lennox recommends use of a coil cleaner with a pH in the range of 5 to 9. The coil must be rinsed thoroughly after cleaning.

In coastal areas, the coil should be cleaned with potable water several times per year to avoid corrosive buildup (salt).

Use of Air Handler During Construction

Lennox does not recommend the use of its air handler unit during any phase of construction. Very low return air temperatures, harmful vapors and operation of the unit with clogged or misplaced filters will damage the unit.

Air handler units may be used for heating (heat pumps) or cooling of buildings under construction, if the following conditions are met:

- A room thermostat must control the air handler. The use of fixed jumpers is not allowed.
- Air filter must be installed in the system and must be maintained during construction.
- Air filter must be replaced upon construction completion.
- The air handler evaporator coil, supply fan assembly and duct system must be thoroughly cleaned following final construction clean-up.
- All air handler operating conditions must be verified according to these installation instructions.
- Ensure that sensor opening is clear and free of debris.

FIGURE 29. Example of Clear, Unobstructed Sensor Inlet

FIGURE 30. Example of Clear, Unobstructed Sensor Inlet

Sensor Maintenance

It is recommended to check the state of the sensor every 6 months, at the beginning of each cooling and heating season.

- Ensure that the sensor opening is clear and free of debris.
- Check that the sensor cable is in good condition.
- DO NOT use abrasive cleaning solutions or detergents to clean sensor opening.
- DO NOT use flammable compressed air solutions to clean the sensor opening.
- DO NOT vacuum sensor inlet opening, as this could cause damage to the sensor internal components.
- Replace sensor if the opening is not clean or free of debris.
- When cleaning the evaporator coil, remove sensor from the coil. Follow recommended coil cleaning guidelines as described in installation instructions.

Modes of Operation

The modes of operation for the RDS Non-Communicating Blower Control Board are Initializing, Normal, Leak Detected, and Fault.

Initializing

The RDS Non-Communicating Blower Control Board is establishing connection with the refrigerant detection sensor and is completing an initial five (5) minute purge sequence.

Normal - Monitoring

The HVAC system is functioning normally. The RDS Non-Communicating Blower Control Board has not detected a refrigerant leak.

Leak Detected - Mitigating

When the RDS Non-Communicating Blower Control Board detects a refrigerant leak:

1 - The RDS Non-Communicating Blower Control Board shuts off the (R) input (24VAC power) to the thermostat, which de-energizes the outdoor unit compressor and heat sources, such as gas and/or electric strip heat. No heating or cooling demands will be met.

2 - The RDS Non-Communicating Blower Control Board activates the blower (high speed). The blower purges refrigerant from the cabinet, plenum, and ductwork.

3 - After the RDS Non-Communicating Blower Control Board determines the refrigerant levels are below the safety threshold, the blower will continue to function for an additional five (5) minutes.

4 - After the blower sequence is complete, the HVAC system resumes normal operation.

***NOTE** – The HVAC system may not maintain a cooling or heating setpoint if a significant leak exists. Any refrigerant leaks that remain unaddressed for an extended time may cause the HVAC system to shut down on a low refrigerant pressure limit condition.*

Fault

When a fault is detected within the RDS Non-Communicating Blower Control Board, the indoor unit blower engages and remains engaged at a constant output until the fault is cleared.

Diagnostic Codes

The RDS Non-Communicating Blower Control Board is equipped with a 7-segment LED display. The LED display signals the state of the Non-Communicating Blower Control Board. See TABLE 4 for diagnostic codes.

TABLE 4

Diagnostic Codes

Diagnostic Code	Description
E150	Refrigerant leak detected
E167	Prior refrigerant leak occurred Check for leak. Press button to clear code
E151	Sensor indicates fault
E154	Sensor communication issue
E160	Incompatible sensor type
E163	Power quality issue on R Check transformer. R should be (24VAC 50/60hz +- 3hz)
E371	Float switch open
E372	Airflow misconfigured. Check Airflow configuration DIP switches. Confirm Y2 airflow >= Y1 airflow

Initialization and Post Initialization State

Initialization state begins immediate after boot up. The 7 segment LED will show the sequence in TABLE 5. After initialization (POST) the board will be in one of the states shown in TABLE 6.

TABLE 5

Initialization State

1st Step	2nd Step	3rd Step	Repeat	Description
“8”	N/A	N/A	No	Test pattern turning on all display LEDs
MM.mm.bbbb	N/A	N/A	No	SW revision: M=major, m=minor, b=build
Refrigerant List	N/A	N/A	No	Refrigerant
“P”	“Any diagnostoc code(s)”	Airflow Code	Yes	Pre-purge status. Any active diagnostic code

TABLE 6

Post Initialization State

Control Board State	1 st Step	2ND Step	3rd Step	Decimal Point
Monitoring [idle]	None	None	None	Blinking
Monitoring [servicing demands]	Any Diagnostic code present	List of demand codes	Airlfow code	OFF
Mitigating	E150 + any other diagnostic code	Airflow codes	None	OFF
Servicing	Any Diagnostic code present	Any demand codes	Airflow code	OFF
Fault	Any Diagnostic code present	Any Diagnostic code present	Airflow code	OFF

TABLE 7

Demand Codes

Demand	Code
Cool 1st Stage	C1
Cool 2nd Stage	C2
Electric Heat 1st Stage	H1
Electric Heat 2nd Stage	H2
Heat Pump 1st Stage	h1
Heat Pump 2nd Stage	h2
Fan	Air Flow
Blower-Off Delay	“-”
Defrost	df
Dehumidity	d

TABLE 8

Airflow Code

Speed Tap	Airflow Code
1	A1
2	A2
3	A3
4	A4
5	A5
6	A6
7	A7
8	A8
9	A9

Test Button Functionality

The RDS Non-Communicating Blower Control Board is equipped with a Test/Reset button. The Test button can be used to complete several functions, depending on the mode of operation of the RDS Non-Communicating Blower Control Board.

TABLE 9 lists the functions of the Test button during each mode of operation.

TABLE 9

Mode of Operation	Press the Test Button to...
Normal	Trigger a leak detection response. Verify all equipment is wired correctly into the RDSC (after installation).
Leak Detected	Reset the RDSC to a normal mode of operation after a previous leak has been detected and purged from the HVAC system.
Fault	Reset the RDSC after troubleshooting and resolving a fault condition. If the fault is not resolved, the RDSC will enter the Fault mode again.

Test Button - Additional Functions

TABLE 10 lists the additional functions of the Test Button while the RDS Non-Communicating Blower Control Board is functioning within the states of Initializing, Monitoring, Leak Detection, Servicing and Fault.

TABLE 10

State	Press	Action
Initializing	Short	Skips remaining pre-purge after sensors are recognized by the RDSC
Initializing	Long	Reset control
Monitoring	Short	Clear purge-counter if prior mitigation has occurred; Test mitigation
Monitoring	Long	Reset control
Mitigating	Short	If testing mitigation, end test
Servicing	Short	Reevaluate fault condition - if cleared return to monitoring, otherwise update indicator
Servicing	Long	Reset control
Fault	Short	Reevaluate fault condition - if cleared return to monitoring, otherwise update indicator
Fault	Long	Reset control

Thermostat Compatibility

Thermostats that preserve memory settings are compatible with the RDS Non-Communicating Blower Control Board. Examples include:

- Battery-powered thermostats
- Analog thermostats
- Smart thermostats
- Late-model programmable thermostats
- *Early-generation digital and programmable thermostats may not retain the operation mode and temperature setpoints after a power outage.*

The following scenarios are likely to occur when home occupants are not available to adjust the thermostat setpoints as the system is recovering from leak detection and resuming normal operation:

- Heating could be lost during a cold night
- Cooling could be lost during a hot day
- The thermostat could reset to an incorrect temperature setpoint

Compatibility Verification

Complete the following process to determine whether the thermostat is compatible with the RDS Non-Communicating Blower Control Board.

1 - Change the thermostat's current setpoint and operating mode.

2 - Power cycle the breaker to the furnace.

***NOTE** – Wait five (5) minutes before supplying power to the furnace breaker.*

3 - Note whether the thermostat maintained its setpoints and operating mode.

a. If the thermostat maintained the settings, the thermostat is compatible with the RDS Non-Communicating Blower Control Board.
b. If the thermostat did not maintain its setpoint and/or operating mode, the thermostat is not compatible with the RDS Non-Communicating Blower Control Board. Recommend replacing with a compatible thermostat.

Additional Applications

In zoned applications, all dampers will remain open when the RDS Non-Communicating Blower Control Board is in Fault or Leak Detected mode. Normal heating and cooling demands are permissible, but the blower will remain engaged until the fault condition is addressed.

Zone HVAC System

If the RDS Non-Communicating Blower Control Board is installed in a zone HVAC system, the RDS Non-Communicating Blower Control Board will open all zone dampers if a leak is detected.

***NOTE** – Proper wiring of the zone panel to the RDS Non-Communicating Blower Control Board is required for all zone dampers to open.*

After the purge sequence is complete, the zone system will resume normal operation.

External Alarm

(*For applications with external alarms wired directly to the RDS Non-Communicating Blower Control Board.*)

The RDS Non-Communicating Blower Control Board triggers the external alarm system when it enters Leak Detected mode. For alarm notifications, the RDS Non-Communicating Blower Control Board provides a dry relay contact that is rated 3A at 30 VAC/DC.

Start Up Test Procedure

The RDS Non-Communicating Blower Control Board is equipped with a Test/Reset button, see “Test Button Functionality” on page 29. After the RDS Non-Communicating Blower Control Board has been mounted and wired, restore power to the HVAC system. The system will then run through a purge sequence for five (5) minutes. After the purge sequence is complete, proceed to testing cooling demand and heating demand.

NOTE - *The 5 minute purge sequence can be bypassed by pressing the test botton.*

Cooling Demand

1 - Prompt a cooling demand at the thermostat.

2 - Press the Test button on the RDS Non-Communicating Blower Control Board.

The system then executes a leak detection response.

Short press the test button to initiate the test on the RDS non-communicating blower control board,

3 - Observe the following sequence:

a. The 7 segement disaply will flash E150 followed by the second stage cooling airflow code “A6”.

b. The blower powers up.

c. The outdoor compressor powers down.

4 - Short press the test button to end test.

Heating Demand

1 - Prompt a heating demand at the thermostat.

2 - Press the Test button on the RDS Non-Communicating Blower Control Board.

The system then executes a leak detection response.

Short press the test button to initiate the test on the RDS non-communicating blower control board,

3 - Observe the following sequence:

a. The 7 segement disaply will flash E150.

b. The blower powers up.

c. The electric heat power down.

d. The heat pump outdoor compressor powers down.

4 - Short press the test button to end test.

Decommissioning

Before carrying out this procedure, it is essential that the technician is completely familiar with the equipment and all its detail. It is recommended good practice that all refrigerants are recovered safely.

Prior to the task being carried out, an oil and refrigerant sample shall be taken in case analysis is required prior to re-use of recovered refrigerant. It is essential that electrical power is available before starting decommissioning.

a) Become familiar with the equipment and its operation.

b) Isolate system electrically.

c) Before attempting the procedure, ensure that:

- mechanical handling equipment is available, if required, for handling refrigerant cylinders;
- all personal protective equipment is available and being used correctly;
- the recovery process is supervised at all times by a competent person;
- recovery equipment and cylinders conform to the appropriate standards.

d) Pump down refrigerant system, if possible.

e) If a vacuum is not possible, make a manifold so that refrigerant can be removed from various parts of the system.

f) Make sure that cylinder is situated on the scales before recovery takes place.

g) Start the recovery machine and operate in accordance with instructions.

h) Do not overfill cylinders (no more than 80% volume liquid charge).

i) Do not exceed the maximum working pressure of the cylinder, even temporarily.

j) When the cylinders have been filled correctly and the process completed, make sure that the cylinders and the equipment are removed from site promptly and all isolation valves on the equipment are closed off.

k) Recovered refrigerant shall not be charged into another REFRIGERATING SYSTEM unless it has been cleaned and checked.

⚠ IMPORTANT

Equipment shall be labelled stating that it has been decommissioned and emptied of refrigerant. The label shall be signed and dated. Ensure that there are labels on the equipment that state the flammability of the refrigerant used.

Installing Contractor's Name_____ Installing Date_____

Installing Contractor's Phone_____ Air Handler Model #_____

Job Address_____

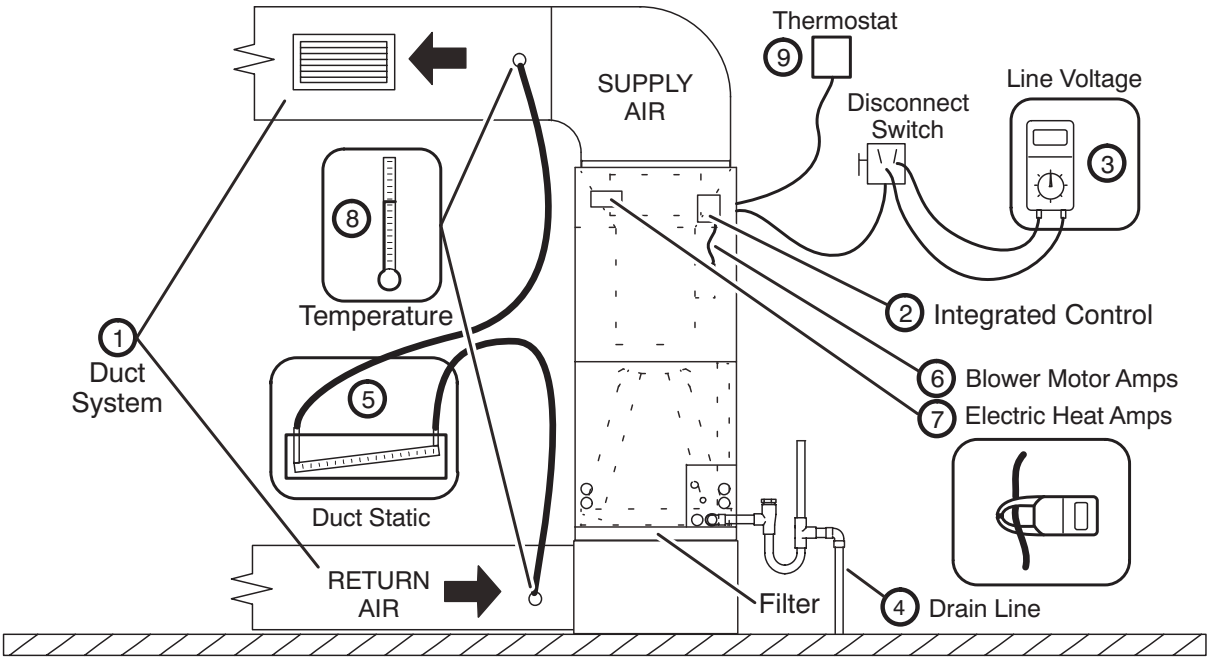

1 DUCT SYSTEM

SUPPLY AIR DUCT

☐ Sealed

☐ Insulated (if necessary)

☐ Registers Open and Unobstructed

RETURN AIR DUCT

☐ Sealed

☐ Filter Installed and Clean

☐ Registers Open and Unobstructed

2 INTEGRATED CONTROL

☐ Jumpers Configured Correctly (if applicable)

☐ Appropriate Links in Place (if applicable)

3 VOLTAGE CHECK

☐ Supply Voltage _____

☐ Low Voltage _____

☐ Electrial Connections Tight

4 DRAIN LINE

☐ Leak Free

5 TOTAL EXTERNAL STATIC (dry coil)

	dry coil	wet coil
Supply External Static	_____	_____
Return External Static	_____	_____
Total External Static =	_____	_____

6 ELECTRIC HEAT AMPS_____

7 INDOOR BLOWER AMPS_____

INDOOR BLOWER CFM_____

8 TEMPERATURE DROP (Cooling Mode)

Return Duct Temperature _____

Supply Duct Temperature – _____

Temperature Drop = _____

8 TEMPERATURE RISE (Heating Mode)

Return Duct Temperature _____

Supply Duct Temperature – _____

Temperature Rise = _____

9 THERMOSTAT

☐ Adjusted and Programmed

☐ Operation Explained to Owner

☐ Explained Operation of System to Homeowner

Technician's Name:_____Date Start–Up & Performance Check Completed_____

FIGURE 31. Start-up and Performance Checklist (Upflow Configuration)

Installing Contractor's Name_____ Installing Date_____

Installing Contractor's Phone_____ Air Handler Model #_____

Job Address_____

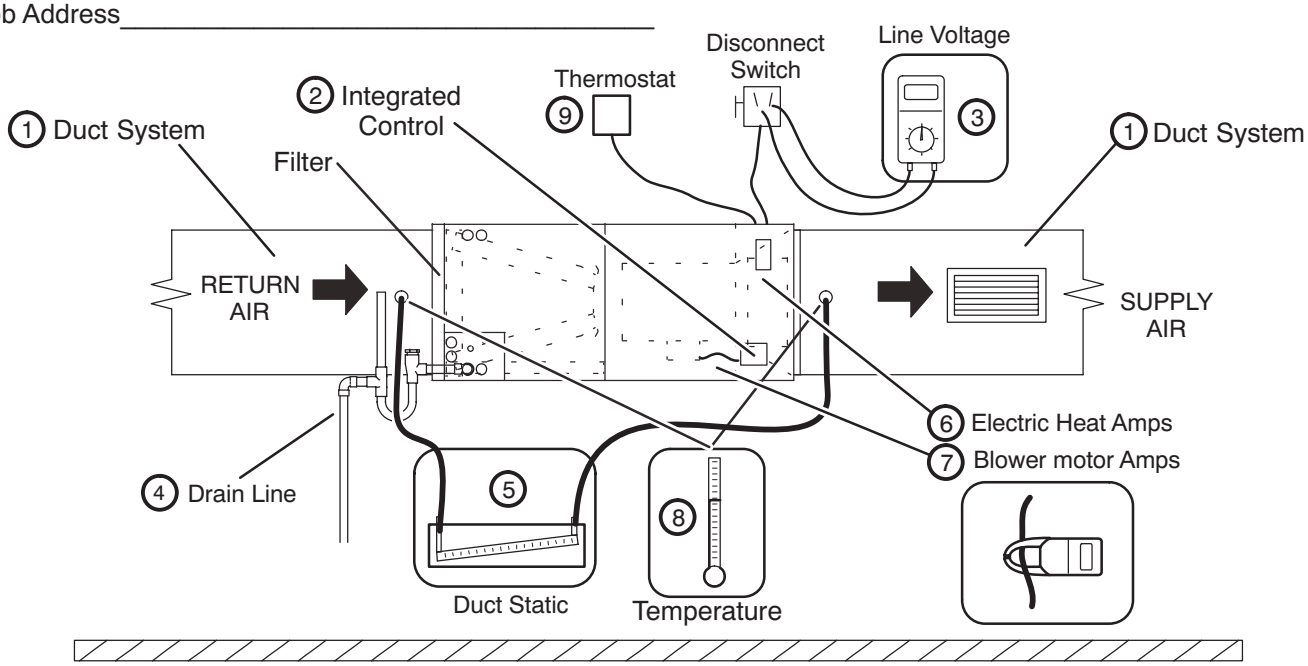

1 DUCT SYSTEM

SUPPLY AIR DUCT

- ☐ Sealed
- ☐ Insulated (if necessary)
- ☐ Registers Open and Unobstructed

RETURN AIR DUCT

- ☐ Sealed
- ☐ Filter Installed and Clean
- ☐ Registers Open and Unobstructed

2 INTEGRATED CONTROL

- ☐ Jumpers Configured Correctly (if applicable)
- ☐ Appropriate Links in Place (if applicable)

3 VOLTAGE CHECK

- ☐ Supply Voltage _____
- ☐ Low Voltage _____
- ☐ Electrial Connections Tight

4 DRAIN LINE

- ☐ Leak Free

5 TOTAL EXTERNAL STATIC (dry coil)

	dry coil	wet coil
Supply External Static	_____	_____
Return External Static	_____	_____
Total External Static =	_____	_____

6 ELECTRIC HEAT AMPS_____

7 INDOOR BLOWER AMPS_____

INDOOR BLOWER CFM_____

8 TEMPERATURE DROP (Cooling Mode)

Return Duct Temperature _____

Supply Duct Temperature – _____

Temperature Drop = _____

8 TEMPERATURE RISE (Heating Mode)

Return Duct Temperature _____

Supply Duct Temperature – _____

Temperature Rise = _____

9 THERMOSTAT

- ☐ Adjusted and Programmed
- ☐ Operation Explained to Owner

☐ Explained Operation of System to Homeowner

Technician's Name:_____Date Start–Up & Performance Check Completed_____

FIGURE 32. Start-Up and Performance Checklist (Horizontal Configuration)