©2024 Lennox Industries Inc.
Dallas, Texas, USA

INSTALLATION INSTRUCTIONS

Elite® Series EL18KSLV Units

HEAT PUMP
508700-01
12/2024

THIS MANUAL MUST BE LEFT WITH THE HOMEOWNER FOR FUTURE REFERENCE

General

These units are designed for use in residential and light commercial type buildings.

This unit uses R454B, which is an ozone-friendly HFC refrigerant. The unit must be installed with a matching indoor coil and line set. A filter drier approved for use with R454B is installed in the unit.

The EL18KSLV variable capacity unit is installed with a standard 24VAC non-communicating thermostat. See field wiring diagrams for wiring details.

These instructions are intended as a general guide and do not supersede local codes in any way. Consult authorities having jurisdiction before installation.

***NOTE** – This unit EL18KSLV is a PARTIAL UNIT HEAT PUMP, complying with PARTIAL UNIT requirements of this Standard, and must only be connected to other units that have been confirmed as complying to corresponding PARTIAL UNIT requirements of this Standard, UL 60335-2-40/CSA C22.2 No. 60335-2-40, or UL 1995/CSA C22.2 No 236.*

***NOTE** – The EL18KSLV units are programmed from the factory to function in 2, 3 and 5 ton modes of operation. The 5 ton units are field convertible to 4 ton to efficiently perform for the required application. If the intended capacity is 4 ton, refer to Programming Unit Type on page 22 and the Control Board DIP SW5 on page 23.*

Operating Range

Cooling: 5°F to 125°F

Heating: -22°F to 75°F

- When the outdoor temperature drops below -22°F (-30°C), the unit will stop running. The unit will turn back on automatically when the temperature rises above the lowest limit.
- It is recommended to have a secondary heating source(s) available in case the temperature drops below the operating range.

⚠ WARNING

Improper installation, adjustment, alteration, service or maintenance can cause property damage, personal injury or loss of life. Installation and service must be performed by a licensed professional HVAC installer or equivalent, or service agency.

This unit must be installed with an approved indoor air handler or coil. For AHRI Certified system match-ups and expanded ratings, visit www.LennoxPros.com.

⚠ WARNING

To prevent serious injury or death:

1. Lock-out/tag-out before performing maintenance.
2. If system power is required (e.g., smoke detector maintenance), disable power to blower, remove fan belt where applicable, and ensure all controllers and thermostats are set to the “OFF” position before performing maintenance.
3. Always keep hands, hair, clothing, jewelry, tools, etc. away from moving parts.

⚠ CAUTION

As with any mechanical equipment, contact with sharp sheet metal edges can result in personal injury. Take care while handling this equipment and wear gloves and protective clothing.

1224
508700-01

⚠ WARNING

- Do not use means to accelerate the defrosting process or to clean, other than those recommended by the manufacturer.
- The appliance shall be stored in a room without continuously operating ignition sources (for example: open flames, an operating gas appliance, or an operating electric heater).
- Do not pierce or burn.
- Be aware that refrigerants may not contain an odor.

⚠ CAUTION

Under no circumstances shall potential sources of ignition be used in the searching for or detection of refrigerant leaks. A halide torch (or any other detector using a naked flame) shall not be used.

The following leak detection methods are deemed acceptable for all refrigerant systems.

Electronic leak detectors may be used to detect refrigerant leaks but, in the case of flammable refrigerants, the sensitivity may not be adequate, or may need re-calibration. (Detection equipment shall be calibrated in a refrigerant-free area.) Ensure that the detector is not a potential source of ignition and is suitable for the refrigerant used. Leak detection equipment shall be set at a percentage of the LFL of the refrigerant and shall be calibrated to the refrigerant employed, and the appropriate percentage of gas (25 % maximum) is confirmed. Leak detection fluids are also suitable for use with most refrigerants but the use of detergents containing chlorine shall be avoided as the chlorine may react with the refrigerant and corrode the copper pipe-work. If a leak is suspected, all naked flames shall be removed/extinguished. If a leakage of refrigerant is found which requires brazing, all of the refrigerant shall be recovered from the system, or isolated (by means of shut off valves) in a part of the system remote from the leak.

⚠ WARNING

If this appliance is conditioning a space with an area smaller than TAmin or stored in a space with an area smaller than Amin as defined by this instruction, then that space must be without continuously operating open flames (e.g. an operating gas appliance) or other potential ignition sources (e.g. an operating electric heater or similar hot surface). A flame-producing device may be installed in the same space if the device is provided with an effective flame arrest system.

⚠ WARNING

Every working procedure that affects safety means shall only be carried out by competent persons. This appliance is not to be used by persons (including children) with reduced physical, sensory or mental capabilities, or lack of experience and knowledge, unless they have been given supervision or instruction concerning use of the appliance by a person responsible for their safety. Children should be supervised to ensure they do not play with the appliance.

- To avoid danger of suffocation, keep the plastic bag or thin film used as the packaging material away from young children.
- Be sure not to allow foreign materials (oil, water, etc) entering the refrigerant piping. Seal the ends of refrigerant piping before storage.
- For installation purposes, be sure to use the parts supplied by the manufacturer or other prescribed parts. The use of non-prescribed parts can cause serious accidents such as the unit falling, water leakage, electric shock, or fire.
- The rated power supply of this product is 208/230 VAC/60hz/1PH. Verify the voltage is within 187~253 range before turning the equipment on.
- Supply power to the heat pump should be from a dedicated circuit that meets branch circuit ampacity requirements.
- Use a special branch circuit breaker and receptacle matched to the power circuit capacity of the heat pump. (Install in accordance with local technical standard for electrical equipment)
- Perform wiring work in accordance with standards so that the air conditioner can be operated safely and positively.
- If the SUPPLY CORD is damaged, it must be replaced by the manufacturer, its service agent or similarly qualified persons in order to avoid a hazard.

⚠ IMPORTANT

After completion of field piping for split systems, the field pipework shall be pressure tested with an inert gas and then vacuum tested prior to refrigerant charging, according to the following requirements;

– Field-made refrigerant joints indoors shall be tightness tested. The test method shall have a sensitivity of .2 oz. per year of refrigerant or better, under pressure.

No leak shall be detected.

TAmin Table

Charge (lb)	4	4.5	5	5.5	6	6.5	7	7.5	8	8.5	9	9.5	10	10.5	11
Charge (kg)	1.8	2.0	2.2	2.5	2.7	2.9	3.1	3.4	3.6	3.8	4.0	4.3	4.5	4.7	5.0
Minimum Conditioned Area (ft²)	59	67	74	82	89	97	104	112	119	127	134	142	149	157	164
Minimum Conditioned Area (m²)	5.4	6.2	6.8	7.6	8.2	9.0	9.6	10.4	11.0	11.7	12.4	13.1	13.8	14.5	15.2

***NOTE** – Table is based on the configuration where the discharge port and air return port in the room is higher than 2.2m.*

***NOTE** – Multiply values in TAmin table by the Altitude Adjustment Factors to correct TAmin based on installed altitude.*

Altitude Adjustment Factor

Altitude (m)	0	200	400	600	800	1000	1200	1400	1600
Altitude (ft)	0	660	1310	1970	2620	3280	3940	4590	5250
Adj. Factor	1	1	1	1	1.02	1.05	1.04	1.1	1.12
Altitude (m)	1600	1800	2000	2200	2400	2600	2800	3000	3200
Altitude (ft)	5250	5910	6560	7220	7870	8530	9190	9840	10500
Adj. Factor	1.12	1.15	1.18	1.21	1.25	1.28	1.32	1.36	1.4

Qmin Table			
Refrigerant Charge lb (kg)	**CFM Required**	**Refrigerant Charge lb (kg)**	**CFM Required**
5 (2.268)	135	18 (8.165)	487
6 (2.722)	162	19 (8.618)	514
7 (3.175)	189	20 (9.072)	541
8 (3.629)	216	21 (9.525)	568
9 (4.082)	244	22 (9.979)	595
10 (4.536)	271	23 (10.433)	622
11 (4.990)	298	24 (10.886)	649
12 (5.443)	325	25 (11.340)	676
13 (5.897)	352	26 (11.793)	704
14 (6.350)	379	27 (12.247)	731
15 (6.804)	406	28 (12.701)	758
16 (7.257)	433	29 (13.154)	785
17 (7.711)	460	30 (13.608)	812

***NOTE** – Qmin minimum airfow requirement for refrigerant leak mitigation.*

⚠ IMPORTANT

In addition to conventional charging procedures, the following requirements shall be followed.

- Ensure that contamination of different refrigerants does not occur when using charging equipment. Hoses or lines shall be as short as possible to minimize the amount of refrigerant contained in them.
- Cylinders shall be kept in an appropriate position according to the instructions.
- Ensure that the REFRIGERATING SYSTEM is earthed prior to charging the system with refrigerant.
- Label the system when charging is complete (if not already).
- Extreme care shall be taken not to overfill the REFRIGERATING SYSTEM.

Prior to recharging the system, it shall be pressure-tested with the appropriate purging gas. The system shall be leak tested on completion of charging, but prior to commissioning. A follow up leak test shall be carried out prior to leaving the site.

- **During installation, due to the extended refrigerant pipes, additional REFRIGERANT may be charged. Refer to the nameplate attatched to the unit for details.**
- **Handling, installation, cleaning, servicing and disposal of refrigerant must comply with the local regulation and the instruction.**

⚠ IMPORTANT

Pipe work, including piping material, pipe routing, and installation shall include protection from physical damage in operation and service, and be in compliance with national and local codes and standards, such as ASHRAE 15, ASHRAE 15.2, UL 207, IAPMO Uniform Mechanical Code, ICC International Mechanical Code, or CSA B52. All field joints shall be accessible for inspection prior to being covered or enclosed.

⚠ WARNING

Ducts connected to an appliance shall not contain a potential ignition source

⚠ IMPORTANT

Ensure that the area is in the open or that it is adequately ventilated before breaking into the system or conducting any hot work. A degree of ventilation shall continue during the period that the work is carried out.

⚠ CAUTION

Some soaps used for leak detection are corrosive to certain metals. Carefully rinse piping thoroughly after leak test has been completed. Do not use matches, candles, flame or other sources of ignition to check for gas leaks.

⚠ IMPORTANT

When removing refrigerant from a system, either for servicing or decommissioning, it is recommended good practice that all refrigerants are removed safely.

When transferring refrigerant into cylinders, ensure that only appropriate refrigerant recovery cylinders are employed. Ensure that the correct number of cylinders for holding the total system charge is available. All cylinders to be used are designated for the recovered refrigerant and labelled for that refrigerant (i. e. special cylinders for the recovery of refrigerant). Cylinders shall be complete with pressure-relief valve and associated shut-off valves in good working order. Empty recovery cylinders are evacuated and, if possible, cooled before recovery occurs.

The recovery equipment shall be in good working order with a set of instructions concerning the equipment that is at hand and shall be suitable for the recovery of all appropriate refrigerants including, when applicable, flammable refrigerants. In addition, a set of calibrated weighing scales shall be available and in good working order. Hoses shall be complete with leak-free disconnect couplings and in good condition. Before using the recovery machine, check that it is in satisfactory working order, has been properly maintained and that any associated electrical components are sealed to prevent ignition in the event of a refrigerant release. Consult manufacturer if in doubt.

The recovered refrigerant shall be returned to the refrigerant supplier in the correct recovery cylinder, and the relevant waste transfer note arranged. Do not mix refrigerants in recovery units and especially not in cylinders.

If compressors or compressor oils are to be removed, ensure that they have been evacuated to an acceptable level to make certain that flammable refrigerant does not remain within the lubricant. The evacuation process shall be carried out prior to returning the compressor to the suppliers. Only electric heating to the compressor body shall be employed to accelerate this process. When oil is drained from a system, it shall be carried out safely.

⚠ IMPORTANT

When breaking into the refrigerant circuit to make repairs – or for any other purpose – conventional procedures shall be used. However, for flammable refrigerants it is important that best practice be followed and, since flammability is a consideration, procedures such as safely remove refrigerant following local and national regulations, purging the circuit with inert gas, evacuating (optional for A2L), purging with inert gas (optional for A2L), or opening the circuit by cutting or brazing be adhered to. The refrigerant charge shall be recovered into the correct recovery cylinders if venting is not allowed by local and national codes. For appliances containing flammable refrigerants, the system shall be purged with oxygen-free nitrogen to render the appliance safe for flammable refrigerants.

This process might need to be repeated several times. Compressed air or oxygen shall not be used for purging refrigerant systems. For appliances containing flammable refrigerants, refrigerants purging shall be achieved by breaking the vacuum in the system with oxygen-free nitrogen and continuing to fill until the working pressure is achieved, then venting to atmosphere, and finally pulling down to a vacuum (optional for A2L). This process shall be repeated until no refrigerant is within the system (optional for A2L). When the final oxygen-free nitrogen charge is used, the system shall be vented down to atmospheric pressure to enable work to take place. Ensure that the outlet for the vacuum pump is not close to any potential ignition sources and that ventilation is available.

⚠ IMPORTANT

Verify cabling will not be subject to wear, corrosion, excessive pressure, vibration, sharp edges or any other adverse environmental effects.

⚠ WARNING

PARTIAL UNITS shall only be connected to an appliance suitable for the same refrigerant.

⚠ IMPORTANT

Assure the maximum operating pressure is considered when connecting to any indoor units.

⚠ IMPORTANT

According to ASHRAE 15, these units can stop compressor working in 10s when receiving the signal from the Refrigerant Detection Systems in indoor units. Verify and assure the validity during installation.

NOTICE!

Charging information is given on the charging procedure sticker on the unit access panel. For more in-depth information, consult the Installation and Service Procedures manual, available on LennoxPros.com or through the Technical Support department at 800-453-6669.

⚠ WARNING

For your safety, the information in this manual must be followed to minimize the risk of fire, electric shock, or personal injury.

- Use this equipment only for its intended purpose as described in this manual.
- This heat pump must be properly installed in accordance with these instructions before it is used.
- All wiring should be rated for the amperage value listed on the rating plate. Use only copper wiring.
- **All electrical work must be completed by a qualified electrician and completed in accordance with local and national building codes.**
- **Any servicing must be performed by a qualified individual.**
- For any service which requires entry into the refrigerant sealed system, Federal regulations require that the work is performed by a technician having a Class II or Universal certification.
- All air conditioners contain refrigerants, which under federal law must be removed prior to product disposal. If you are getting rid of an old product with refrigerants, check with the company handling disposal.
- These R-454B heat pumps systems require that contractors and technicians use tools, equipment and safety standards approved for use with this refrigerant.

⚠ WARNING

RISK OF ELECTRIC SHOCK. Could cause injury or death.

- An adequate ground is essential before connecting the power supply.
- **Disconnect all connected electric power supplies before servicing.**
- Repair or replace immediately all electrical wiring that has become frayed or otherwise damaged. Do not use wiring that shows cracks or abrasion damage along its length or at either end.

SETTING THE UNIT

Indoor Coil TXV Selection

The outdoor section must be matched to a factory approved indoor section. It is mandatory that the installer ensure that the correct TXV is installed in the indoor section. Reference Refrigerant Piping - Typical Existing Fixed Orifice Removal Procedure. If necessary, remove the existing piston and replace it with the correct TXV. EL18KSLV models are only rated with TXV on the indoor coil.

Outdoor Section

Zoning ordinances may govern the minimum distance the condensing unit can be installed from the property line.

Install on a Solid, Level Mounting Pad

The outdoor section is to be installed on a solid foundation. This foundation should extend a minimum of 2" (inches) beyond the sides of the outdoor section. To reduce the possibility of noise transmission, the foundation slab should NOT be in contact with or be an integral part of the building foundation. See figure 1.

SLAB MOUNTING

Install unit level or, if on a slope, maintain slope tolerance of 2 degrees (or 2 inches per 5 feet [50 mm per 1.5 m]) away from building structure.

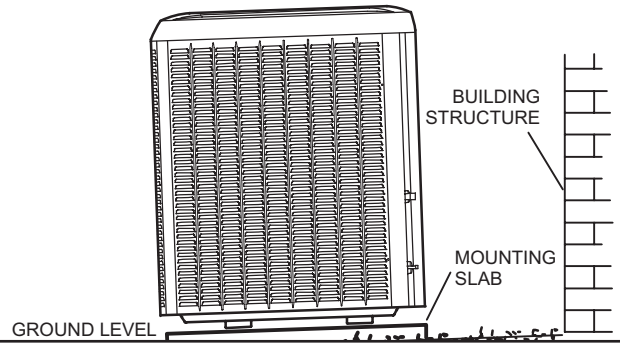

FIGURE 1. Slab Mounting

Clearance Requirements

When installing, allow sufficient space for airflow clearance, wiring, refrigerant piping and service. For proper airflow, quiet operation and maximum efficiency, position so water, snow, or ice from roof or eaves cannot fall directly on unit.

SINGLE UNIT INSTALLATION

BACK

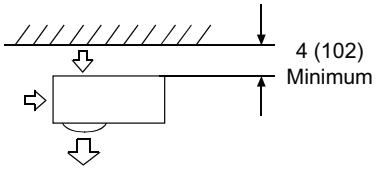

FRONT

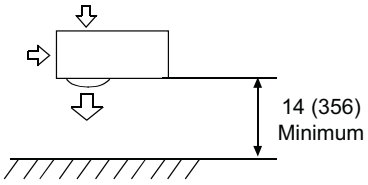

BACK AND SIDE

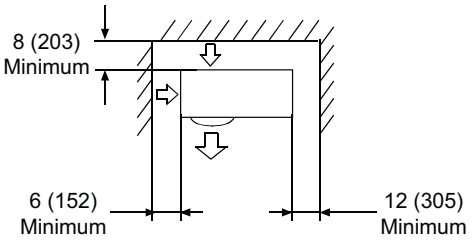

NOTE- Height of barriers is below unit height.

FRONT AND BACK

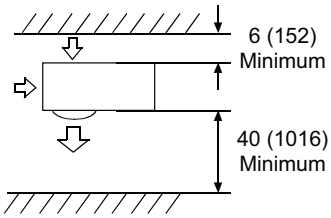

TOP (With Barriers)

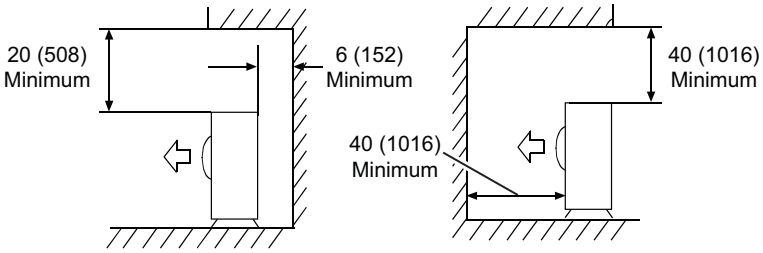

NOTE - Top and two sides of unit must be exposed to open space,
Any barriers on one side of the front or back must be lower than unit height.

Unit Dimensions – Inches (mm)

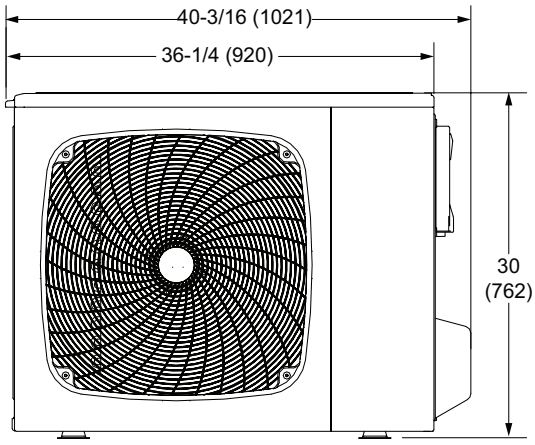

FRONT VIEW

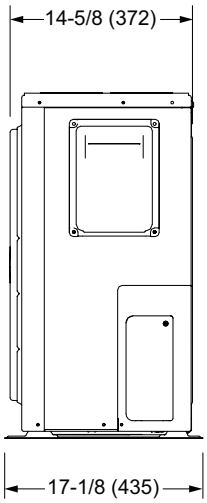

SIDE VIEW

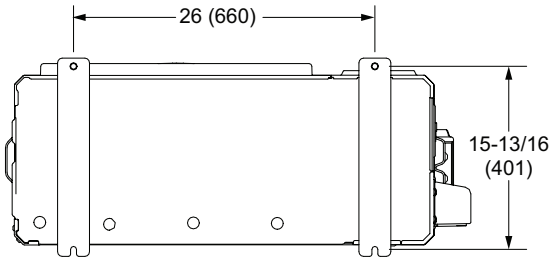

BOTTOM VIEW

-024 UNITS

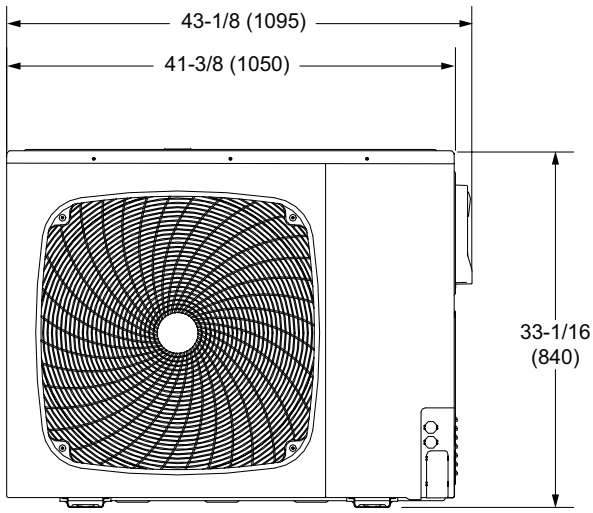

FRONT VIEW

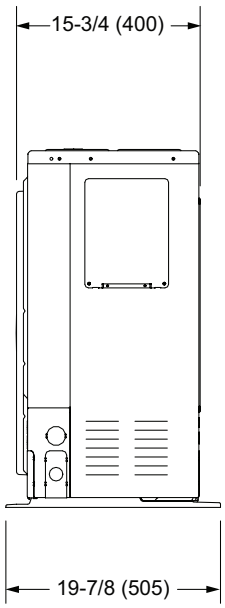

SIDE VIEW

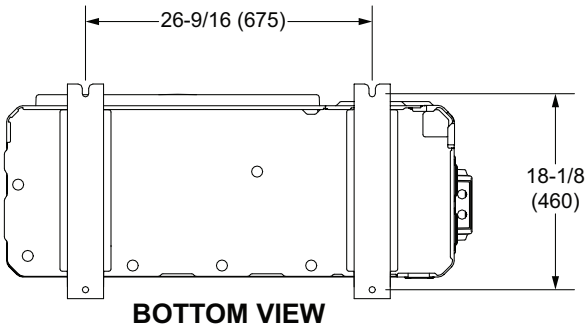

BOTTOM VIEW

-036 UNITS

Unit Dimensions – (Cont'd)

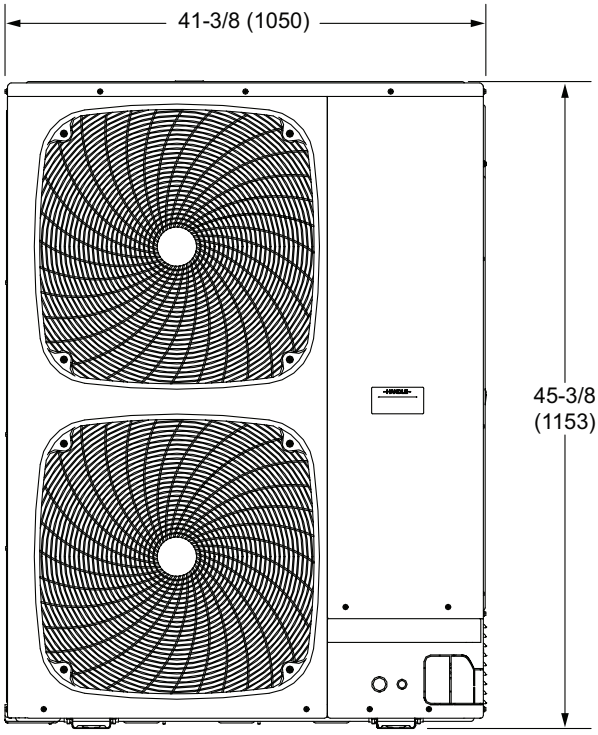

FRONT VIEW

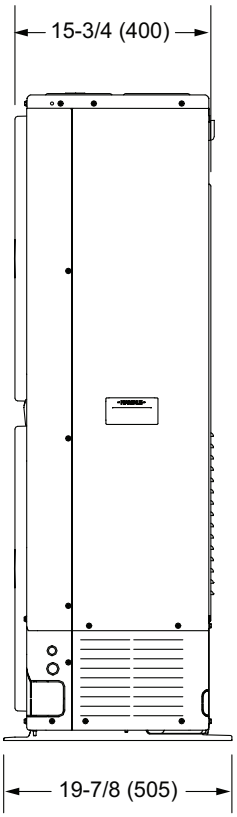

SIDE VIEW

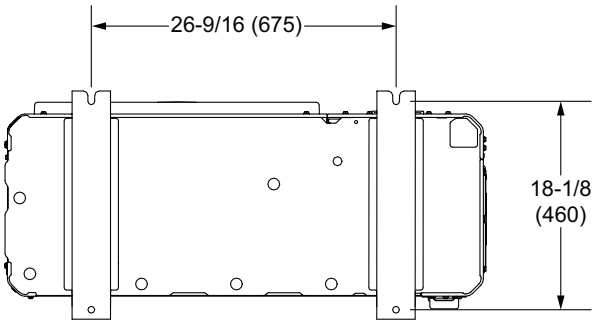

BOTTOM VIEW

-060 UNIT

NOTICE!

Roof Damage!

This system contains both refrigerant and oil. Some rubber roofing material may absorb oil, causing the rubber to degrade. Failure to follow this notice could result in damage to roof surface.

⚠ IMPORTANT

This unit must be matched with an indoor coil as specified with AHRI. For AHRI Certified system match-ups and expanded ratings, visit www.LennoxPros.com

⚠ WARNING

To prevent personal injury, as well as damage to panels, unit or structure, observe the following:

While installing or servicing this unit, carefully stow all removed panels so that the panels will not cause injury to personnel, objects or nearby structures. Also, take care to store panels where they will not be subject to damage (e.g., being bent or scratched).

While handling or stowing the panels, consider any weather conditions (especially wind) that may cause panels to be blown around and damaged.

⚠ IMPORTANT

Exhaust vents from dryers, water heaters and furnaces should be directed away from the outdoor unit. Prolonged exposure to exhaust gases and the chemicals contained within them may cause condensation to form on the steel cabinet and other metal components of the outdoor unit. This will diminish unit performance and longevity

REFRIGERANT PIPING

⚠ IMPORTANT

If this unit is being matched with an approved line set it must be flushed prior to installation. Take care to empty all existing traps. Polyvinyl ether (PVE) oils are used in Lennox units charged with R454B refrigerant. Residual mineral oil can act as an insulator, preventing proper heat transfer. It can also clog the expansion device and reduce system performance and capacity. Failure to properly flush the system per this instruction and the detailed Installation and Service Procedures manual will void the warranty.

⚠ IMPORTANT

Braze-free fittings must conform with UL207 or ISO14903 (latest edition).

Flush the existing line set per the following instructions. For more information, refer to the Installation and Service Procedures manual available on LennoxPros.com. CAUTION - DO NOT attempt to flush and re-use existing line sets or indoor coil when the system contains contaminants (i.e., compressor burn out).

Polyvinyl ether (PVE) oil is used in the compressor.

If a new line set is being installed, size the piping per table 1.

NOTE *- When installing refrigerant lines longer than 50 feet, refer to the Refrigerant Piping Design and Fabrication Guidelines manual available on LennoxPros.com (Corp. 9351-L9), or contact the Technical Support Department Product Application group for assistance.*

⚠ IMPORTANT

The Clean Air Act of 1990 bans the intentional venting of refrigerant (CFCs, HCFCs and HFCs) as of July 1, 1992. Approved methods of recovery, recycling or reclaiming must be followed. Fines and/or incarceration may be levied for noncompliance.

⚠ WARNING

When using a high pressure gas such as nitrogen to pressurize a refrigeration or air conditioning system, use a regulator that can control the pressure down to 1 or 2 psig (6.9 to 13.8 kPa).

⚠ WARNING

Refrigerant can be harmful if it is inhaled. Refrigerant must be used and recovered responsibly.

Failure to follow this warning may result in personal injury or death.

⚠ WARNING

Fire, Explosion and Personal Safety hazard. Failure to follow this warning could result in damage, personal injury or death.

Never use oxygen to pressurize or purge refrigeration lines. Oxygen, when exposed to a spark or open flame, can cause fire and/or an explosion, that could result in property damage, personal injury or death.

⚠ WARNING

Polyvinyl ether (PVE) oils used with R454B refrigerant absorb moisture very quickly. It is very important that the refrigerant system be kept closed as much as possible. DO NOT remove line set caps or service valve stub caps until you are ready to make connections.

The EL18KSLV is a variable-capacity cooling system utilizing variable speed compressor technology. With the variable speed compressor and variable pumping capacity, additional consideration must be given to refrigerant piping sizing and application. The guidelines below are to be used exclusively for the EL18KSLV systems.

COOLING SYSTEM (R454B)

- Total equivalent length equals 180 feet (piping and all fittings included).

NOTE *– Length is general guide. Lengths may be more or less, depending on remaining system design factors.*

- Maximum linear (actual) length = 150 feet.
- Maximum linear liquid lift = 50 feet.

NOTE *– Maximum lifts are dependent on total length, number of elbows, etc. that contribute to total pressure drop.*

- Maximum length vapor riser = 50 feet.
- Additional oil is not required for systems with line lengths up to 150 feet.

SUCTION TRAPS

For systems with the outdoor unit 5 - 50 feet above the indoor unit, one trap must be installed at the bottom of the suction riser.

TABLE 1. Refrigerant Charge and Pipe Length Information

Model	Refrig. Charge (oz.)*	For Liquid Line Length (oz/ft)	Max. System Charge (oz)	System Maximum Pipe Length (ft)	Maximum Vertical Length (ft)	Service Valve Connection Sizes		Refrigerant Line Sizes	
						Suction Line Connection (inch)	Liquid Line Connection (inch)	Suction Line (inch)	Liquid Line (inch)
-024	62	0.55	164.25	150	50	5/8	3/8	3/4	3/8
-036	94	0.55	200.25	150	50	3/4		7/8	
-060	125	0.55	226.25	100	50				

*Factory charged for 15 feet of line set; adjust per installation instructions.

ADDING REFRIGERANT FOR LONG LINE SETS

WEIGH IN

CHARGING METHOD FOR LONG LINE SETS

64ºF (17.7ºC) and Below

Amount specified on nameplate _____ + Adjust amount. for variation in line set length and liquid line diameter using table below. _____ = Total charge _____

Liquid Line Set Diameter	R454B (ounces per foot)
5/16”	0.40
3/8”	0.60
1/2”	1.00

NOTE — Insulate liquid line when it is routed through areas where the surrounding ambient temperature could become higher than the temperature of the liquid line or when pressure drop is equal to or greater than 20 psig.

NOTE — The above nameplate is for illustration purposes only. Go to actual nameplate on outdoor unit for charge information.

Charging Formula for Liquid Line Charge Adjustments

[(Line set oz./ft. x total length) - (factory charge for line set)] = charge adjustment

Example: Units are factory-charged for 15 feet (4.6 meters) of 3/8" line set. Factory charge for 3/8" is 0.60 oz/ft x 15 = 9.0 ounces.

FIGURE 2. Using Weigh In Method

Line Set Joints – Furnace Application

Evaporator primary line set joints in all applications shall have a line set joint sleeve.

Evaporator primary line sets should not have additional joints not covered by line set joint sleeve.

If additional joints are present, the system installation shall comply with one of the options below:

Option 1 - Furnace is installed as a direct vent appliance;

Option 2 - Furnace/Evaporator installation is in a space greater than the minimum conditioned area (Amin);

Option 3 - Furnace/Evaporator installation is connected to a space greater than the minimum conditioned area (Amin) through an opening of at least 15 in² (4-inch diameter hole equivalent) located below the level of the furnace burners;

Option 4 - Have a second refrigerant detection sensor installed below the level of the burners (see Secondary Sensor Installation section).

Multiple Systems Installed in Same Space

For any A2L refrigerant system with additional joints not covered by line set joint sleeves, each system in the same space must have refrigerant detection sensor installed below the level of the burners (see Secondary Sensor Installation section). If all the systems in the same space are installed with direct vent application, then additional refrigerant detection sensor is not needed

Secondary Sensor Installation

If secondary refrigerant sensor is required, it shall be mounted as follows:

Upflow Applications: Mounted on an unused side furnace return air connection at least 9 inches above the floor and within 9 inches from front of furnace.

Downflow Applications: Mounted on one side of the evaporator coil 9 inches above the floor and within 9 inches from front of coil.

Horizontal Applications: Mounted on the bottom side return furnace air connection within 9 inches of both the blower deck and front of furnace.

Connect the refrigerant sensor to the second sensor input on the RDS Control. Refer to the instructions provided with the sensor or the RDS controller to enable the second sensor.

⚠ CAUTION

Brazing alloys and flux contain materials which are hazardous to your health.

Avoid breathing vapors or fumes from brazing operations. Perform operations only in well-ventilated areas.

Wear gloves and protective goggles or face shield to protect against burns.

Wash hands with soap and water after handling brazing alloys and flux.

⚠ WARNING

Danger of fire. Bleeding the refrigerant charge from only the high side may result in pressurization of the low side shell and suction tubing. Application of a brazing torch to a pressurized system may result in ignition of the refrigerant and oil mixture. Check the high and low pressures before applying heat.

1A TYPICAL EXISTING FIXED ORIFICE REMOVAL PROCEDURE (UNCASED COIL SHOWN)

OR

1B TYPICAL EXISTING EXPANSION VALVE REMOVAL PROCEDURE (UNCASED COIL SHOWN)

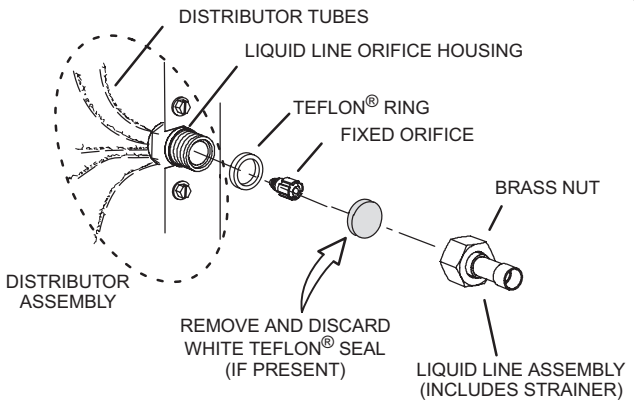

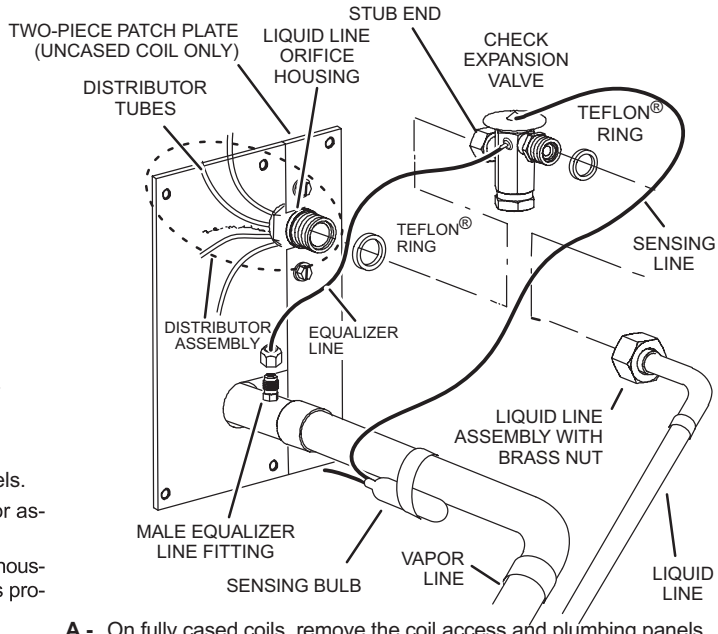

A - On fully cased coils, remove the coil access and plumbing panels.

B - Remove any shipping clamps from the liquid line and distributor assembly.

C - Using two wrenches, disconnect liquid line from liquid line orifice housing. Take care not to twist or damage distributor tubes during this process.

D - Remove and discard fixed orifice, valve stem assembly (if present) and Teflon® washer as illustrated above.

E - Use a field-provided fitting to temporarily reconnect the liquid line to the indoor unit's liquid line orifice housing.

A - On fully cased coils, remove the coil access and plumbing panels.

B - Remove any shipping clamps from the liquid line and distributor assembly.

C - Disconnect the equalizer line from the check expansion valve equalizer line fitting on the vapor line.

D - Remove the vapor line sensing bulb.

E - Disconnect the liquid line from the check expansion valve at the liquid line assembly.

F - Disconnect the check expansion valve from the liquid line orifice housing. Take care not to twist or damage distributor tubes during this process.

G - Remove and discard check expansion valve and the two Teflon® rings.

H - Use a field-provided fitting to temporarily reconnect the liquid line to the indoor unit's liquid line orifice housing.

2 CONNECT GAUGES AND EQUIPMENT FOR FLUSHING PROCEDURE

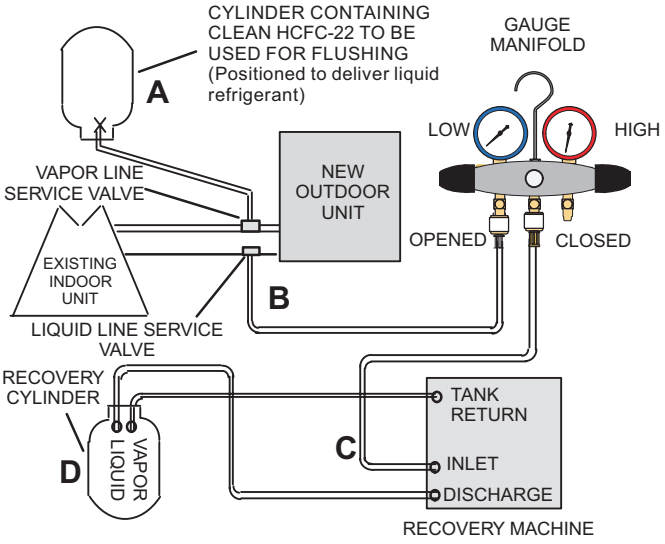

A - HCFC-22 cylinder with clean refrigerant (positioned to deliver liquid refrigerant) to the vapor service valve.

B - HCFC-22 gauge set (low side) to the liquid line valve.

C - HCFC-22 gauge set center port to inlet on the recovery machine with an empty recovery tank connected to the gauge set.

D - Connect recovery tank to recovery machine per machine instructions.

3 FLUSHING LINE SET

The line set and indoor unit coil must be flushed with at least the same amount of clean refrigerant that previously charged the system. Check the charge in the flushing cylinder before proceeding.

A - Set the recovery machine for liquid recovery and start the recovery machine. Open the gauge set valves to allow the recovery machine to pull a vacuum on the existing system line set and indoor unit coil.

B - Position the cylinder of clean HCFC-22 for delivery of liquid refrigerant and open its valve to allow liquid refrigerant to flow into the system through the vapor line valve. Allow the refrigerant to pass from the cylinder and through the line set and the indoor unit coil before it enters the recovery machine.

C - After all of the liquid refrigerant has been recovered, switch the recovery machine to vapor recovery so that all of the HCFC-22 vapor is recovered. Allow the recovery machine to pull the system down to 0.

D - Close the valve on the inverted HCFC-22 drum and the gauge set valves. Pump the remaining refrigerant out of the recovery machine and turn the machine off.

FIGURE 3

Line Set Installation – Pipe Cutting and Flaring

Step 1: Cutting

1. When preparing refrigerant pipes, take your time to cut and flare them properly. This will ensure efficient operation and minimize the need for future repairs and loss of comfort.
2. Measure and record the distance between the indoor and outdoor units.
3. Make sure that the pipe is cut at a perfect 90° angle. Refer to the image below for guidance.

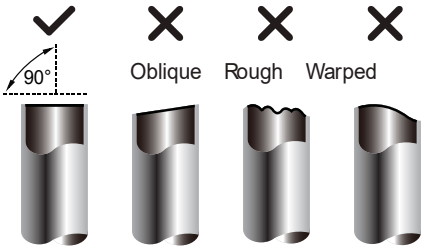

Step 2: Deburring

Burrs will affect the air-tight seal of the refrigerant piping connection. They must be completely removed.

1. Hold the pipe at a downward angle to prevent burrs from falling into the pipe.
2. Using a reamer or deburring tool, remove all inside and outside burrs from the cut section of the pipe.
3. After cutting and deburing, never allow tubing to be exposed to the atmosphere. Tightly seal cut ends with PVC tape.

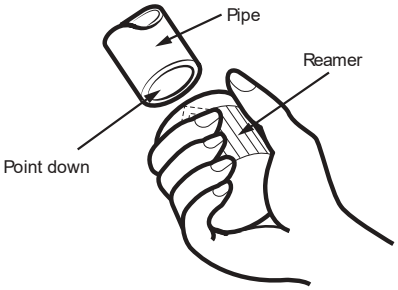

Step 3: Flaring

Proper flaring is essential to achieve an airtight seal.

1. Ensure there is enough insulation to protect the entire line set from end to end.
2. Use the flare nuts from the accessories pouch, located in the indoor unit packaging. Fit the nut on the tubing to be flared.

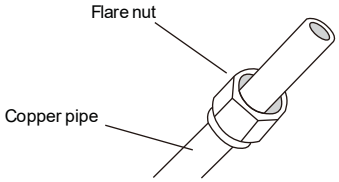

3. Remove the seal over the exposed end, and place the tube into the R-454B flaring tool.

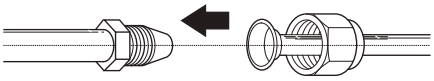

4. Run the tube against the flaring tool pipe stop, and clamp the form on the tube.
5. Rotate the handle of the die clockwise until the clutch releases, then remove the flared tubing from the form.

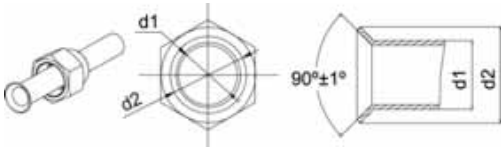

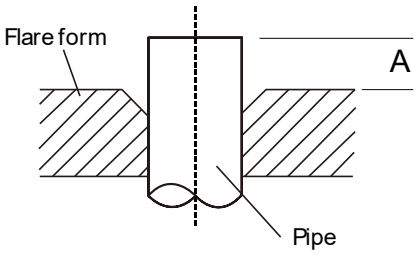

A = ~1/ 16” (1.6mm)

6. Examine the flare to make sure there are no imperfections on the lip of the flare, and that the back of the flare exactly fits the seat of the flare nut.

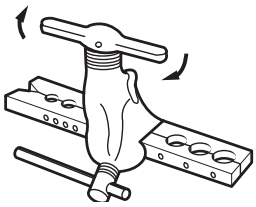

Line Set Installation – Pipe Connection

- Attach the flare nuts to the outdoor service valve.Torque the fittings according to the specifications shown in the torque chart below.

Forced fastening without careful centering may damage the threads and cause a refrigerant leak.

Pipe Diameter(ø)	Fastening torque
Liquid side 6.35mm(1/4")	18N.m/13.3Ft.lbs
Liquid/Gas side 9.52mm(3/8")	42 N.m/30.1Ft.lbs
Gas side 12.7mm(1/2")	55N.m/40.6Ft.lbs
Gas side 15.88mm(5/8")	60 N.m/44.3Ft.lbs
Gas side 19.05mm(3/4")	100N.m/73.8Ft.lbs

- Add additional refrigerant charge if needed before you open outdoor service valves
- Record the amount of refrigerant added in permanent ink at the line set length location entered earlier.

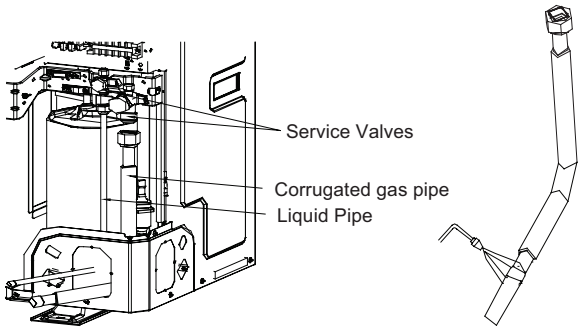

- Two wrenches are required to join the flare connection; one standard wrench and one torque wrench adjusted to the proper settings.
- Repeat the process for attaching the other end of the line set.

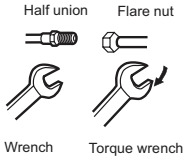

IMPORTANT: a 5/16" female by 1/4" male adapter will be required to connect conventional gauge hoses to the service valves.

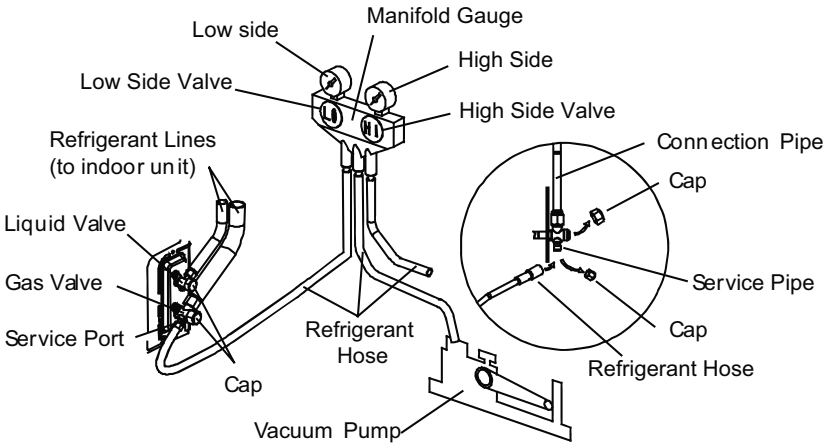

NOTE: The gauge connection will need to have the high side gauge hose connected to the high side liquid valve so both lines can be evacuated and leak checked.

REFRIGERANT PIPING – Install Indoor Expansion Valve

This outdoor unit is designed for use in systems that include an expansion valve metering device (purchased separately) at the indoor coil. See the EL18KSLV Product Specifications bulletin (EHB) for approved expansion valve kit match-ups and application information. The expansion valve unit must be installed inside the cabinet. In applications where an uncased coil is being installed in a field-provided plenum, install the expansion valve in a manner that will provide access for future field service of the expansion valve. Refer to below illustration for reference during installation of expansion valve unit.

INDOOR EXPANSION VALVE INSTALLATION

(Uncased Coil Shown)

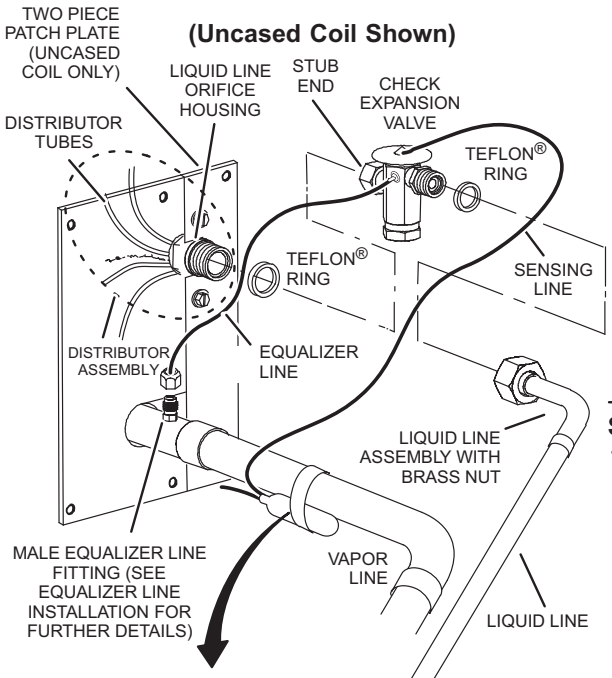

Sensing bulb insulation is required if mounted external to the coil casing. sensing bulb installation for bulb positioning.

EQUALIZER LINE INSTALLATION

1 - Remove and discard either the flare seal cap or flare nut with copper flare seal bonnet from the equalizer line port on the vapor line as illustrated in the figure below.

2 - Remove the field-provided fitting that temporarily reconnected the liquid line to the indoor unit's distributor assembly.

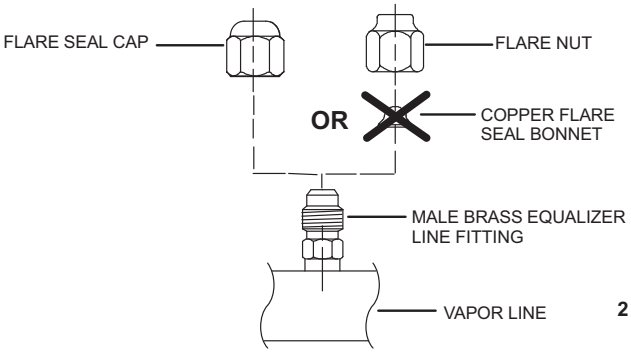

3 - Install one of the provided Teflon® rings around the stubbed end of the check expansion valve and lightly lubricate the connector threads and expose surface of the Teflon® ring with refrigerant oil.

4 - Attach the stubbed end of the check expansion valve to the liquid line orifice housing. Finger tighten and use an appropriately sized wrench to turn an additional 1/2 turn clockwise as illustrated in the figure above, or tighten to 20 ft-lb.

5 - Place the remaining Teflon® washer around the other end of the check expansion valve. Lightly lubricate connector threads and expose surface of the Teflon® ring with refrigerant oil.

6 - Attach the liquid line assembly to the check expansion valve. Finger tighten and use an appropriately sized wrench to turn an additional 1/2 turn clockwise as illustrated in the figure above or tighten to 20 ft-lb.

1/2 Turn

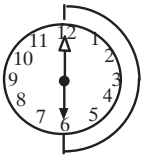

SENSING BULB INSTALLATION

1 - Attach the vapor line sensing bulb in the proper orientation as illustrated below using the clamp and screws provided.

ON LINES SMALLER THAN 3/4", MOUNT SENSING BULB AT EITHER THE 1 OR 11 O'CLOCK POSITION.

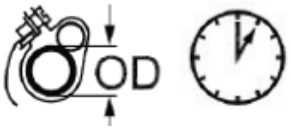

ON 3/4" AND LARGER LINES, MOUNT SENSING BULB AT EITHER THE 3 OR 9 O'CLOCK POSITION.

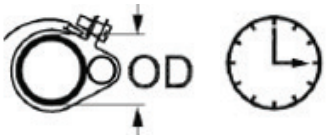

NOTE - *NEVER MOUNT THE SENSING BULB ON BOTTOM OF LINE.*

NOTE *- Though it is preferred to have the sensing bulb installed on a horizontal run of the vapor line, installation on a vertical run of piping is acceptable if necessary. See figure to right for proper bulb orientation on vertical run of piping.*

NOTE *- Confirm proper thermal contact between vapor line and check/expansion bulb before insulating the sensing bulb once installed.*

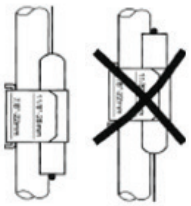

2 - Connect the equalizer line from the check expansion valve to the equalizer vapor port on the vapor line. Finger tighten the flare nut plus 1/8 turn (7 ft-lbs) as illustrated to the right.

1/8 Turn

FIGURE 4

LEAK TEST AND EVACUATION

LEAK TEST

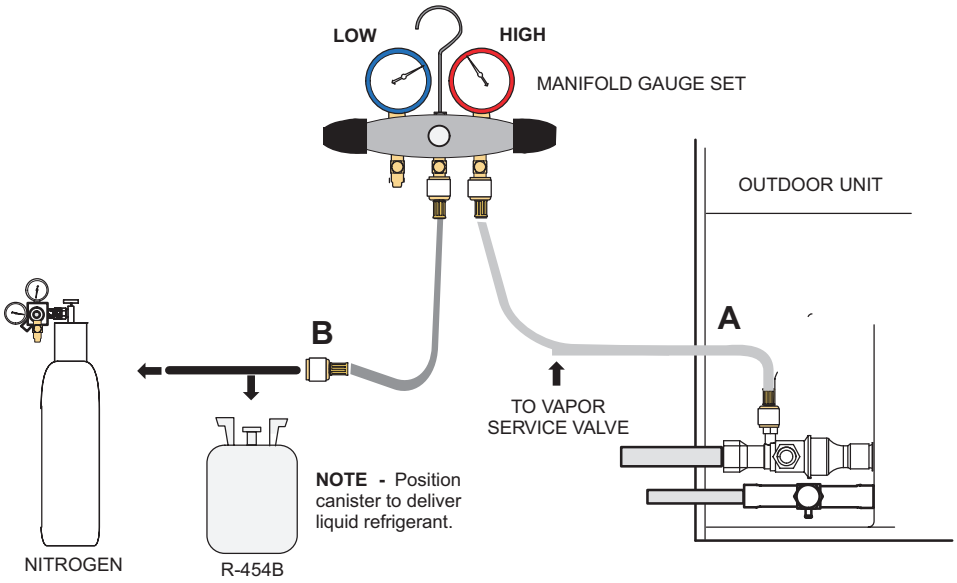

1 CONNECT GAUGE SET

A - Connect the high pressure hose of an R-454B manifold gauge set to the vapor valve service port.

NOTE *- Normally, the high pressure hose is connected to the liquid line port. However, connecting it to the vapor port better protects the manifold gauge set from high pressure damage.*

B - With both manifold valves closed, connect the cylinder of R-454B refrigerant to the center port of the manifold gauge set.

NOTE *- Later in the procedure, the R-454B container will be replaced by the nitrogen container.*

2 TEST FOR LEAKS

After the line set has been connected to the indoor and outdoor units, check the line set connections and indoor unit for leaks. Use the following procedure to test for leaks:

A - With both manifold valves closed, connect the cylinder of R-454B refrigerant to the center port of the manifold gauge set. Open the valve on the R-454B cylinder (vapor only).

B - Open the high pressure side of the manifold to allow R-454B into the line set and indoor unit. Weigh in a trace amount of R-454B. *[A trace amount is a maximum of two ounces (57 g) refrigerant or three pounds (31 kPa) pressure.]* Close the valve on the R-454B cylinder and the valve on the high pressure side of the manifold gauge set. Disconnect the R-454B cylinder.

C - Connect a cylinder of nitrogen with a pressure regulating valve to the center port of the manifold gauge set.

D - Adjust nitrogen pressure to 160 psig (1103 kPa). Open the valve on the high side of the manifold gauge set in order to pressurize the line set and the indoor unit.

E - After a few minutes, open one of the service valve ports and verify that the refrigerant added to the system earlier is measurable with a leak detector. Once leak detector is confirmed operational, leak check the entire system (field joints and line set included) to a sensitivity of 5 grams per year of refrigerant.

F - After leak testing, disconnect gauges from service ports.

FIGURE 5

EVACUATION

3 CONNECT GAUGE SET

***NOTE** - Remove cores from service valves (if not already done).*

A - Connect low side of manifold gauge set with 1/4 SAE in-line tee to *vapor* line service valve

B - Connect high side of manifold gauge set to *liquid* line service valve

C - Connect available micron gauge connector on the 1/4 SAE in-line tee.

D - Connect the vacuum pump (with vacuum gauge) to the center port of the manifold gauge set. The center port line will be used later for both the R-454B and nitrogen containers.

***NOTE -** Position canister to deliver liquid refrigerant.*

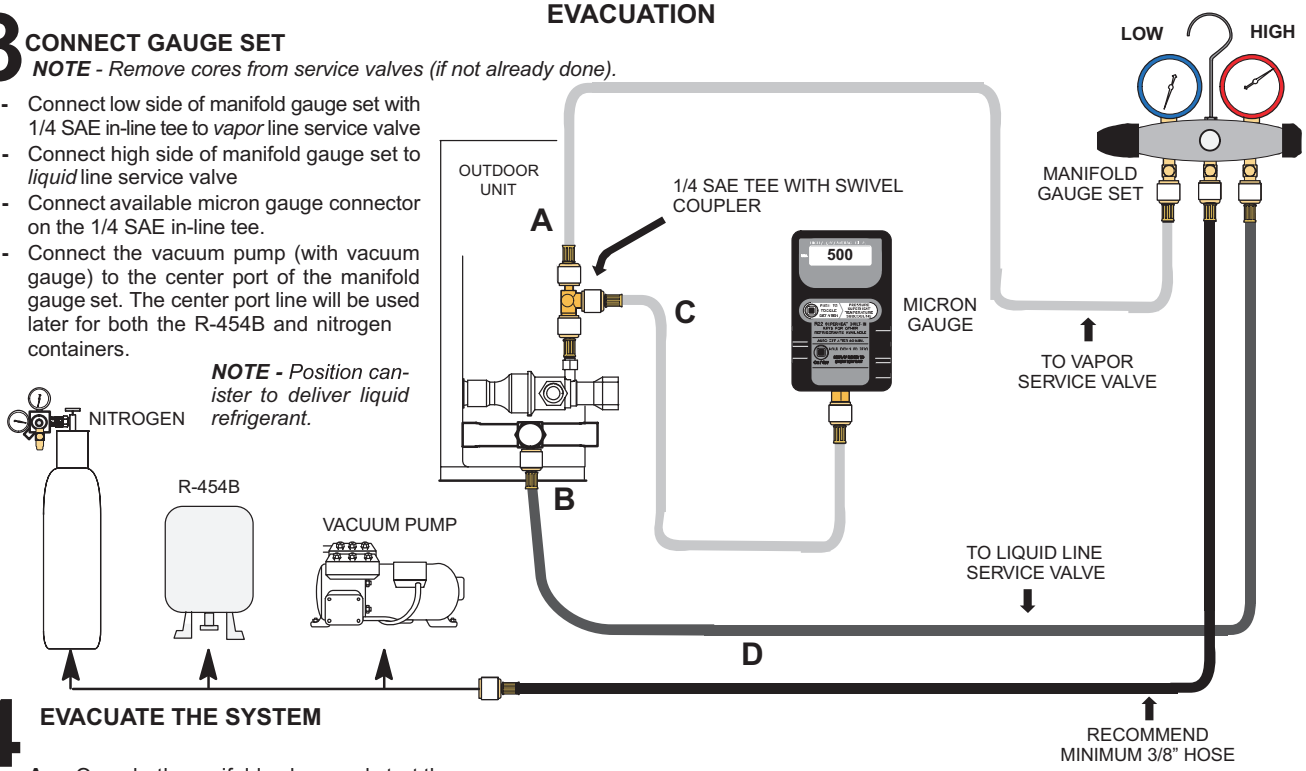

4 EVACUATE THE SYSTEM

A - Open both manifold valves and start the vacuum pump.

B - Evacuate the line set and indoor unit to an **absolute pressure** of 23,000 microns (29.01 inches of mercury).

***NOTE** - During the early stages of evacuation, it is desirable to close the manifold gauge valve at least once. A rapid rise in pressure indicates a relatively large leak. If this occurs, **repeat the leak testing procedure**.*

***NOTE** - The term **absolute pressure** means the total actual pressure above absolute zero within a given volume or system. Absolute pressure in a vacuum is equal to atmospheric pressure minus vacuum pressure.*

C - When the absolute pressure reaches 23,000 microns (29.01 inches of mercury), perform the following:

- Close manifold gauge valves.
- Close valve on vacuum pump.
- Turn off vacuum pump.
- Disconnect manifold gauge center port hose from vacuum pump.
- Attach manifold center port hose to a nitrogen cylinder with pressure regulator set to 160 psig (1103 kPa) and purge the hose.
- Open manifold gauge valves to break the vacuum in the line set and indoor unit.
- Close manifold gauge valves.

WARNING !

Possible equipment damage.

Avoid deep vacuum operation. Do not use compressors to evacuate a system. Extremely low vacuum can cause internal arcing and compressor failure. Damage caused by deep vacuum operation will void warranty.

D - Shut off the nitrogen cylinder and remove the manifold gauge hose from the cylinder. Open the manifold gauge valves to release the nitrogen from the line set and indoor unit.

E - Reconnect the manifold gauge to the vacuum pump, turn the pump on, and continue to evacuate the line set and indoor unit until the absolute pressure does not rise above 500 microns (29.9 inches of mercury) within a 20-minute period after shutting off the vacuum pump and closing the manifold gauge valves.

F - When the absolute pressure requirement above has been met, disconnect the manifold hose from the vacuum pump and connect it to a cylinder of R-454B positioned to deliver liquid refrigerant. Open the manifold gauge valve 1 to 2 psig in order to release the vacuum in the line set and indoor unit.

G - Perform the following:

- Close manifold gauge valves.
- Shut off R-454B cylinder.
- Reinstall service valve cores by removing manifold hose from service valve. Quickly install cores with core tool while maintaining a positive system pressure.
- Replace stem caps and finger tighten them, then tighten an additional one-sixth (1/6) of a turn as illustrated.

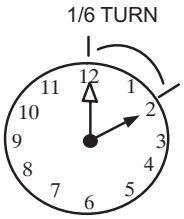

FIGURE 6

ELECTRICAL – Circuit Sizing and Wire Routing

In the U.S.A., wiring must conform with current local codes and the current National Electric Code (NEC). In Canada, wiring must conform with current local codes and the current Canadian Electrical Code (CEC).

Refer to the furnace or air handler installation instructions for additional wiring application diagrams and refer to unit nameplate for minimum circuit ampacity and maximum overcurrent protection size.

Refrigerant Detection System

Unit must be installed with Lennox-approved Refrigerant Detection System (RDS) and sensor.

Do not operate system until refrigerant detection system is verified to be in good working order.

24VAC TRANSFORMER

Use the transformer provided with the furnace or air handler for low-voltage control power (24VAC - 40 VA minimum).

Thermostat Control and Low Voltage Control Wiring

Conventional 24VAC Non-Communicating Thermostat Control

The EL18KSLV variable capacity unit may be installed using a conventional 24VAC non-communicating two-stage heat pump or single-stage heat pump thermostat.

NOTE *– The conventional 24VAC non-communicating thermostat must have a compressor minimum on time of three minutes to prevent compressor short cycling. The Lennox M30, CS7500, CS3000 and many other commercially available electronic thermostats provide this feature.*

The EL18KSLV unit will provide full variable capacity operation when installed with a conventional 24VAC non-communicating two-stage heat pump or single-stage heat pump thermostat. The EL18KSLV outdoor control has advanced control algorithms using the EL18KSLV suction pressure sensor to provide true variable capacity operation.

When utilizing a two-stage conventional 24VAC heat pump thermostat, six wires are required to control the outdoor unit (R, C, W1, O, Y1 and Y2). Refer to the EL18KLSV field wiring diagram for a conventional 24VAC 2-stage heat pump thermostat.

When utilizing a single conventional 24VAC heat pump thermostat, five wires are required to control the outdoor unit (R, C, W1, O, and Y1) and Y1 is jumpered to Y2 in the outdoor unit. Note that the published performance data is based upon the use of a two-stage thermostat. Refer to the EL18KLSV field wiring diagram for a conventional 24VAC single-stage thermostat.

⚠ WARNING

Electric Shock Hazard. Can cause injury or death. Unit must be properly grounded in accordance with national and local codes.

Line voltage is present at all components when unit is not in operation on units with single-pole contactors. Disconnect all remote electric power supplies before opening access panel. Unit may have multiple power supplies.

⚠ WARNING

Fire Hazard. Use of aluminum wire with this product may result in a fire, causing property damage, severe injury or death. Use copper wire only with this product.

⚠ WARNING

Failure to use properly sized wiring and circuit breaker may result in property damage. Size wiring and circuit breaker(s) per Product Specifications bulletin (EHB) and unit rating plate.

⚠ WARNING

ELECTROSTATIC DISCHARGE (ESD) Precautions and Procedures	Electrostatic discharge can affect electronic components. Take care during unit installation and service to protect the unit's electronic controls. Precautions will help to avoid control exposure to electrostatic discharge by putting the unit, the control and the technician at the same electrostatic potential. Touch hand and all tools on an unpainted unit surface before performing any service procedure to neutralize electrostatic charge.

SIZE CIRCUIT AND INSTALL SERVICE DISCONNECT SWITCH

Refer to the unit nameplate for minimum circuit ampacity, and maximum fuse or circuit breaker (HACR per NEC). Install power wiring and properly sized disconnect switch.

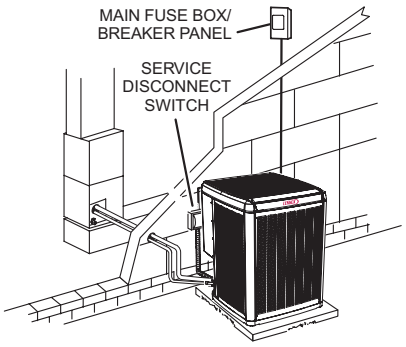

***NOTE** - Units are approved for use only with copper conductors. Ground unit at disconnect switch or connect to an earth ground.*

INSTALL THERMOSTAT

Install room thermostat (ordered separately) on an inside wall approximately in the center of the conditioned area and 5 feet (1.5m) from the floor. It should not be installed on an outside wall or where it can be affected by sunlight or drafts.

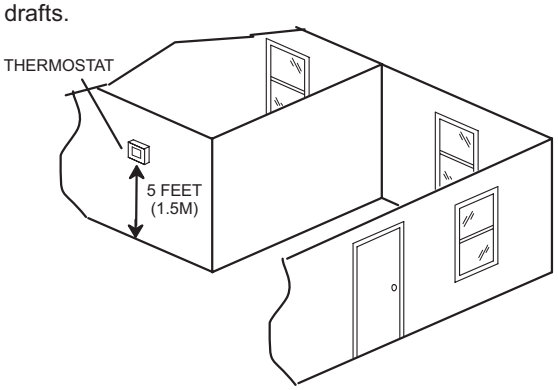

***NOTE** - 24VAC, Class II circuit connections are made in the control panel.*

FIGURE 7

EL18KSLV Thermostat Control Options

Thermostat Type	Indoor Unit Type	Qty. of Wires to EL18KSLV	EL18KSLV Terminal Strip Connections	Unit Operation	Field Wiring Diagram
Conventional 24VAC 2-Stage Heat Pump Thermostat	Any Furnace or Air Handler (non-communicating)	6	R, C, W1, O, Y1, Y2	Full Variable Capacity Operation Controlled by EL18KSLV Unitary Control Using Suction Pressure	Page 19
Conventional 24VAC Single-Stage Heat Pump Thermostat	Any Furnace or Air Handler (non-communicating)	5	R, C, W1, O, Y1 (Jumper Y1 to Y2)	Full Variable Capacity Operation Controlled by EL18KSLV Unitary Control Using Suction Pressure	Page 18

ELECTRICAL

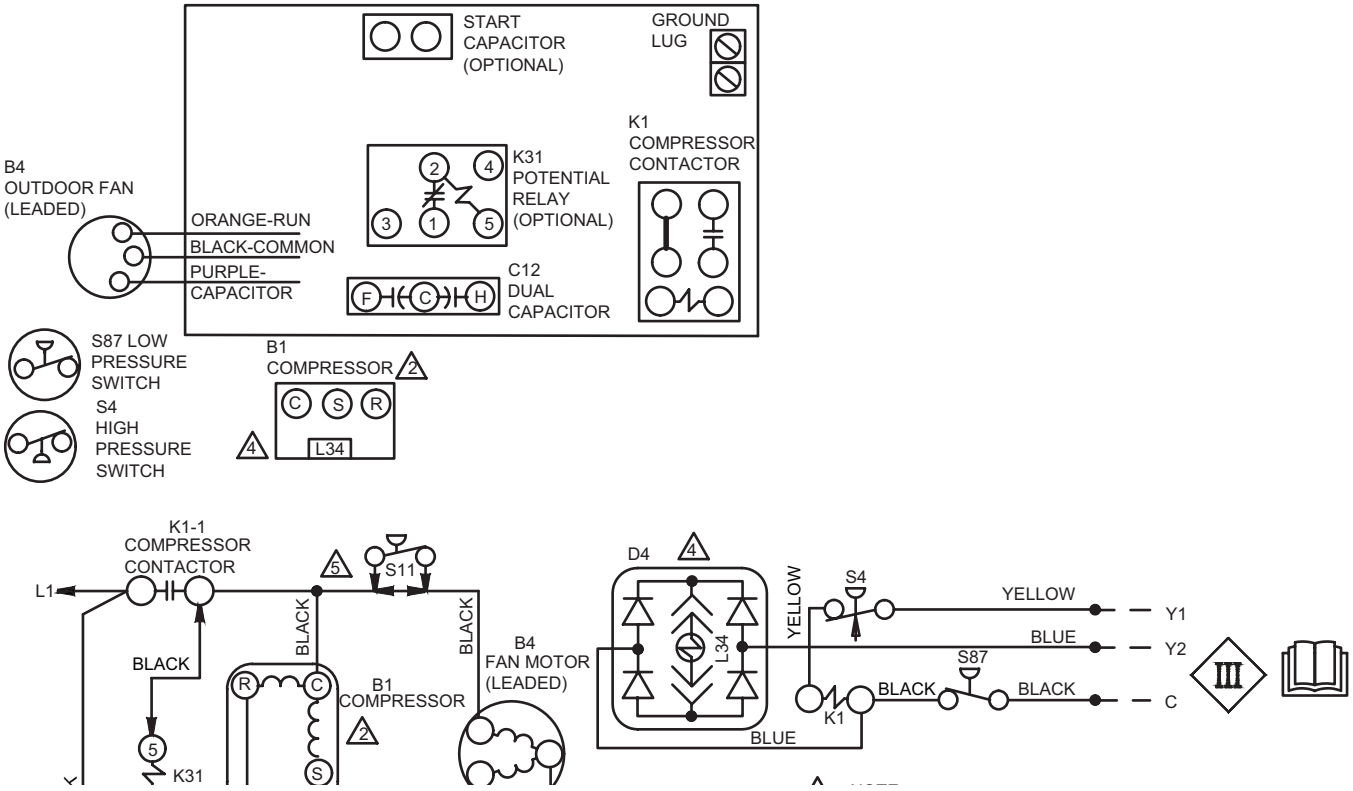

FIGURE 8. Field Wiring

RDS Wiring Diagrams for Heat Pumps

RDS Wiring Diagrams for Single Stage Heat Pump with Air Handler

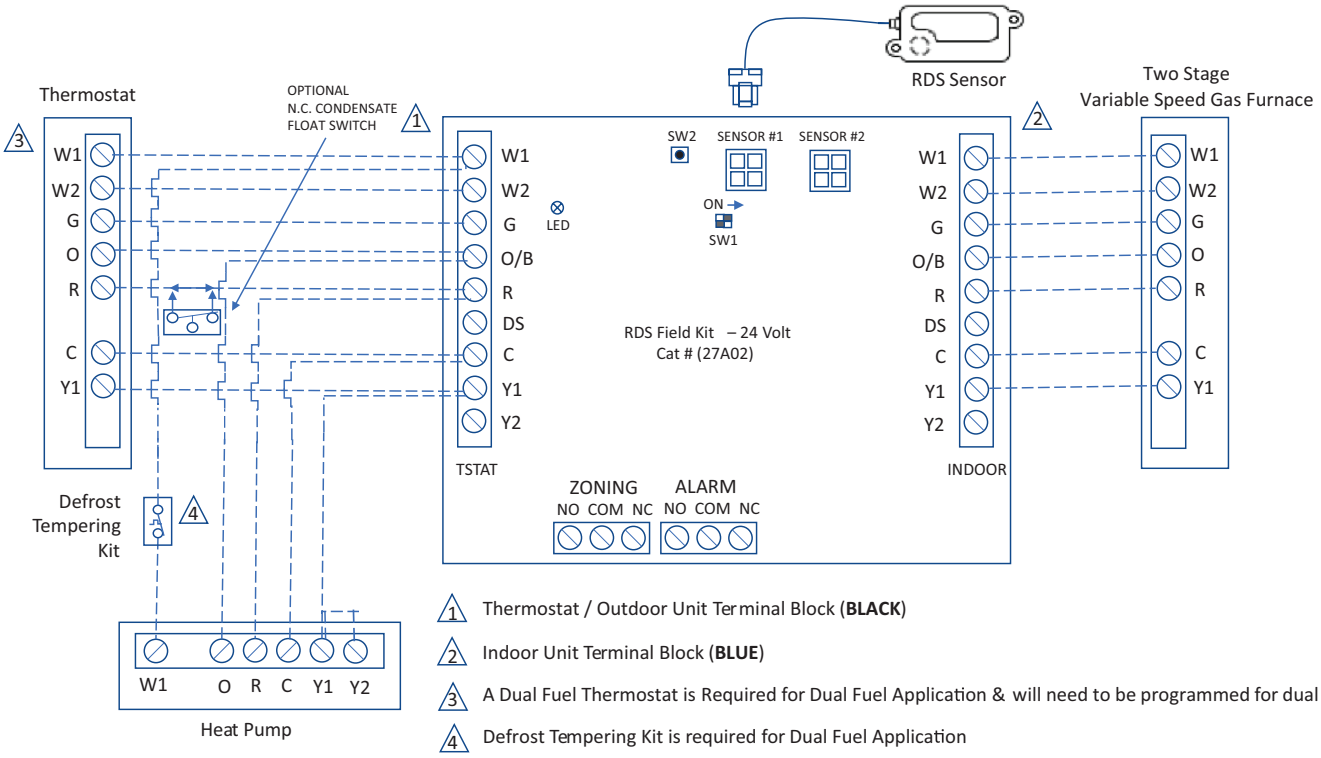

1. Thermostat / Outdoor Unit Terminal Block (**BLACK**)
2. Indoor Unit Terminal Block (**BLUE**)
3. A Dual Fuel Thermostat is Required for Dual Fuel Application & will need to be programmed for dual fuel
4. Defrost Tempering Kit is required for Dual Fuel Application

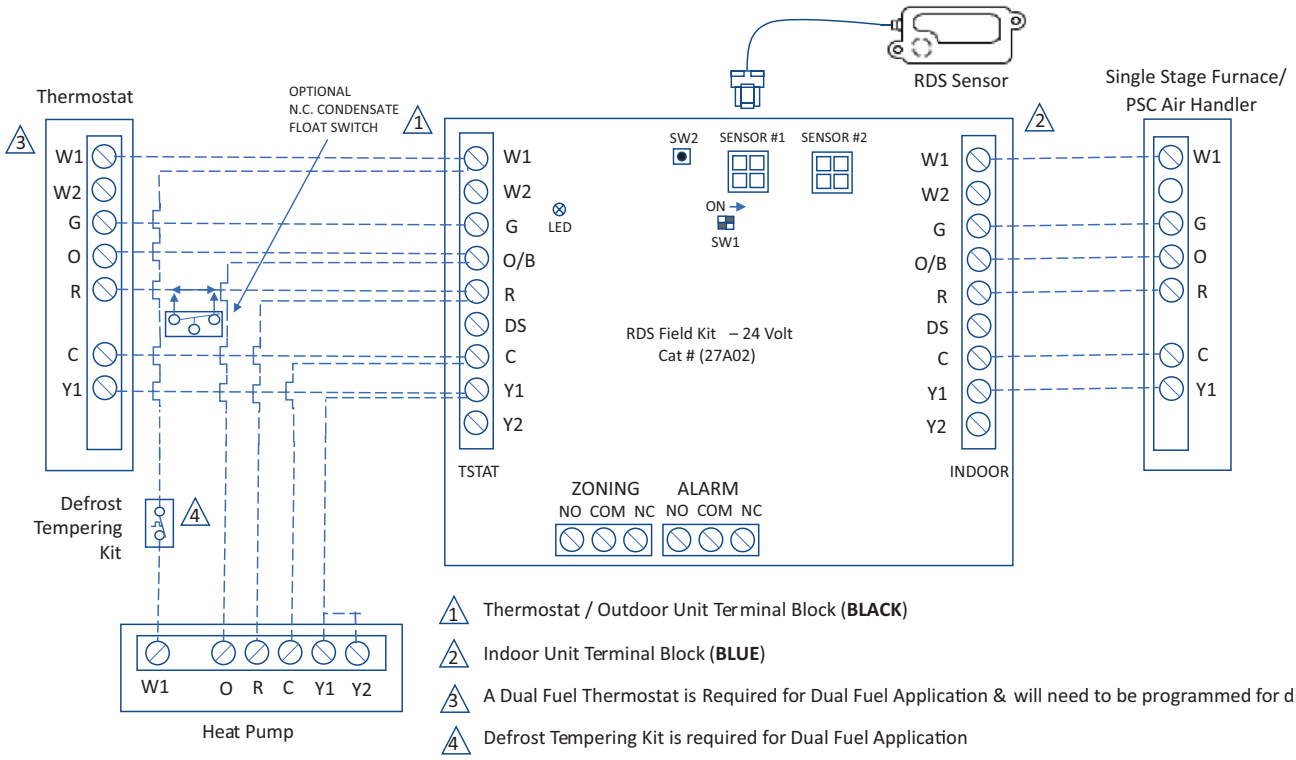

1. Thermostat / Outdoor Unit Terminal Block (**BLACK**)
2. Indoor Unit Terminal Block (**BLUE**)
3. A Dual Fuel Thermostat is Required for Dual Fuel Application & will need to be programmed for dual fuel
4. Defrost Tempering Kit is required for Dual Fuel Application

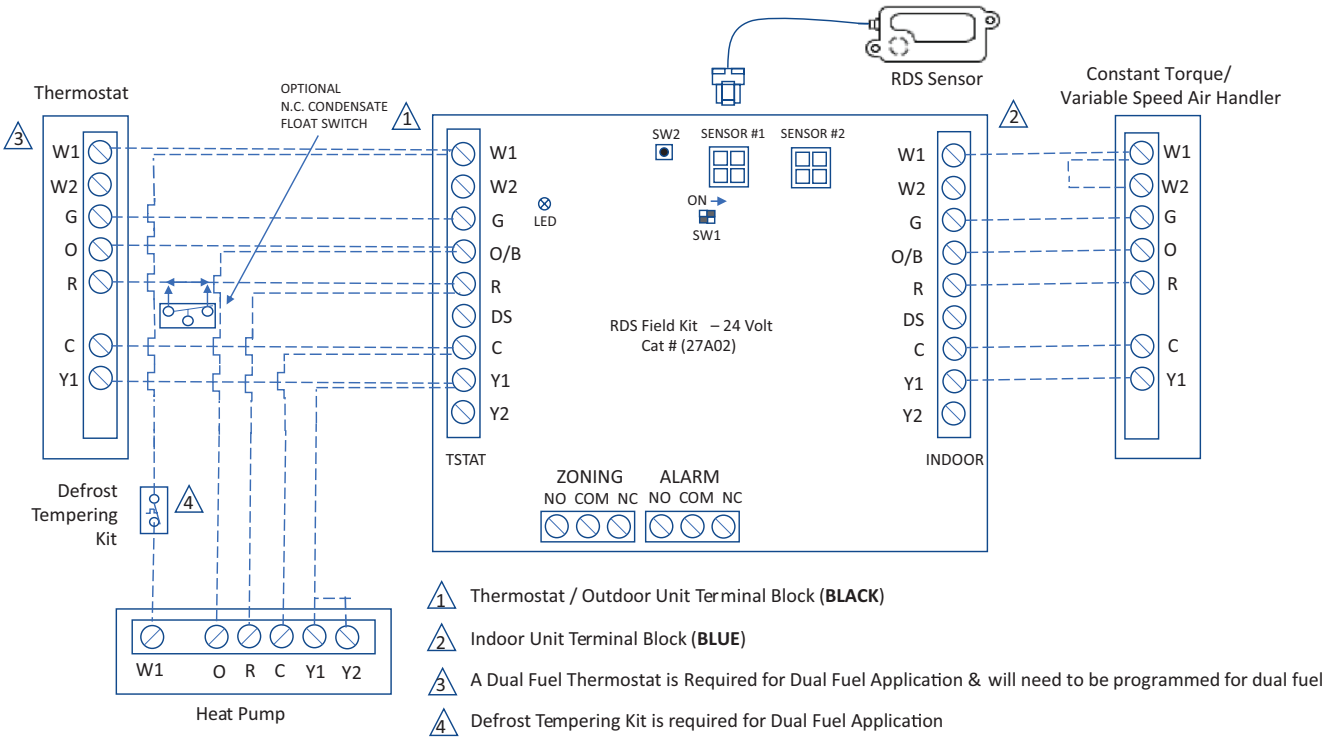

RDS Wiring Diagrams for Two Stage Heat Pump with Two Stage Furnace/Air Handler

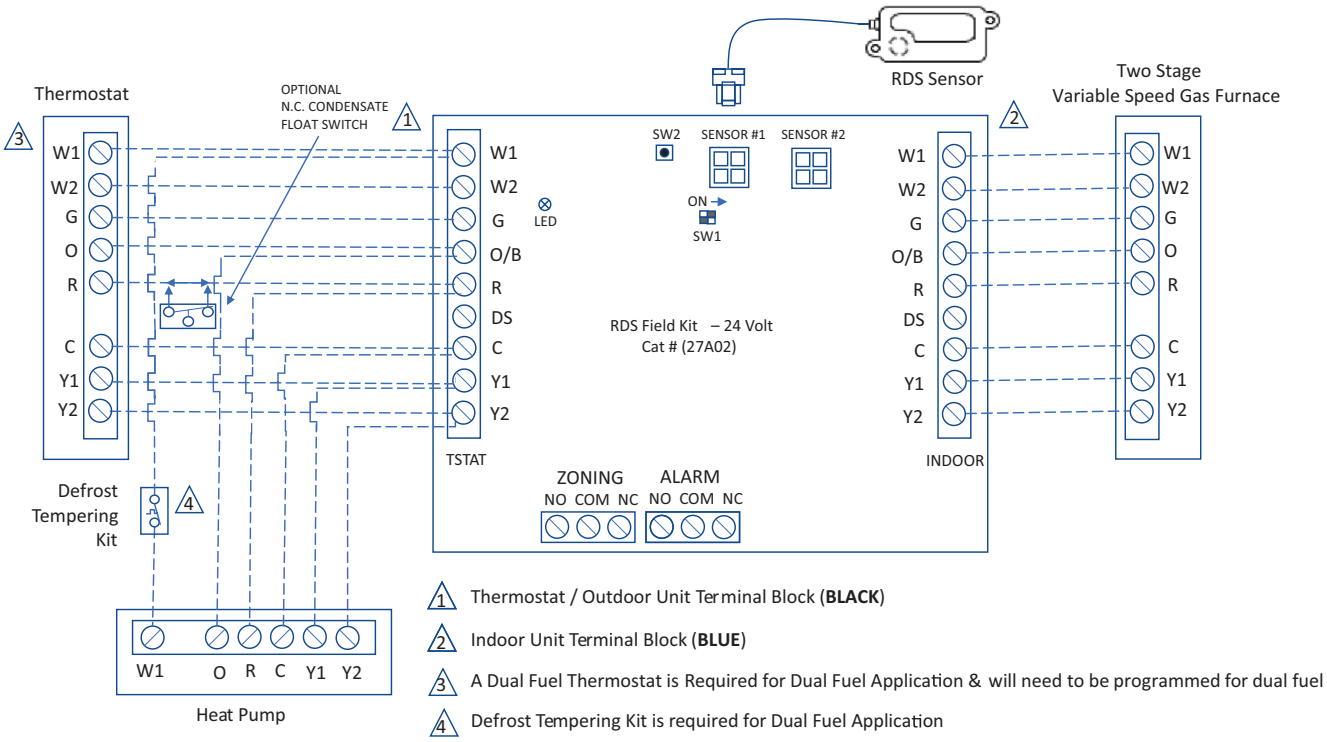

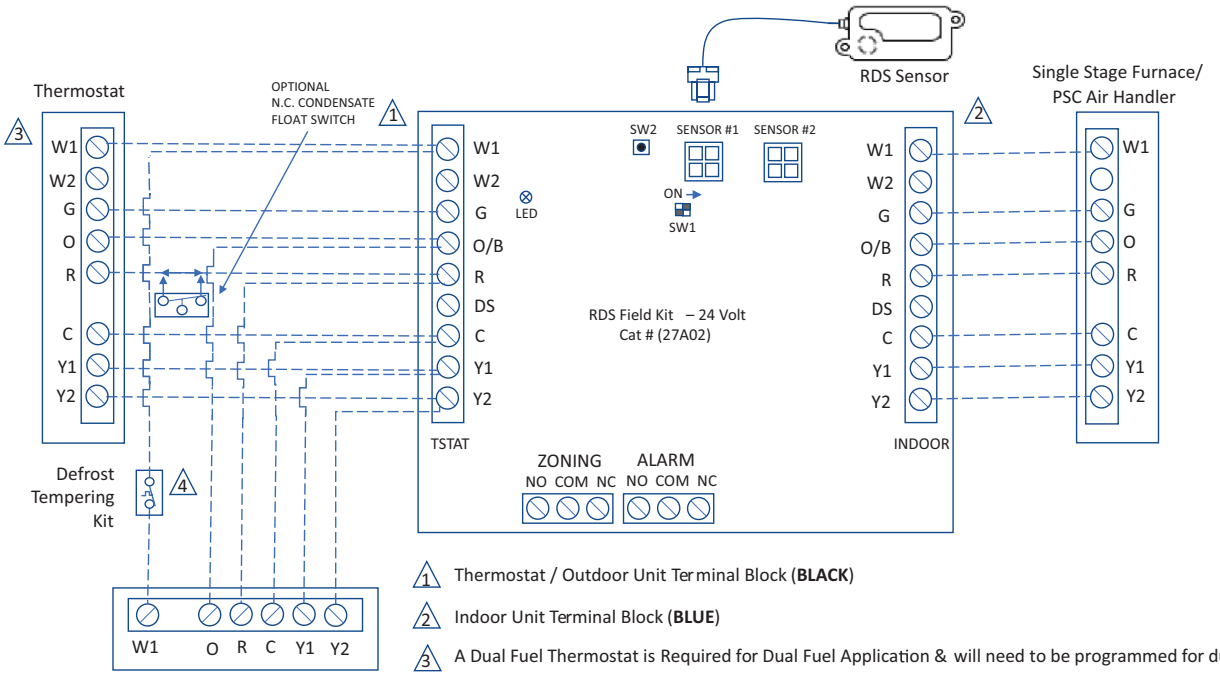

1 Thermostat / Outdoor Unit Terminal Block (**BLACK**)

2 Indoor Unit Terminal Block (**BLUE**)

3 A Dual Fuel Thermostat is Required for Dual Fuel Application & will need to be programmed for dual fuel

4 Defrost Tempering Kit is required for Dual Fuel Application

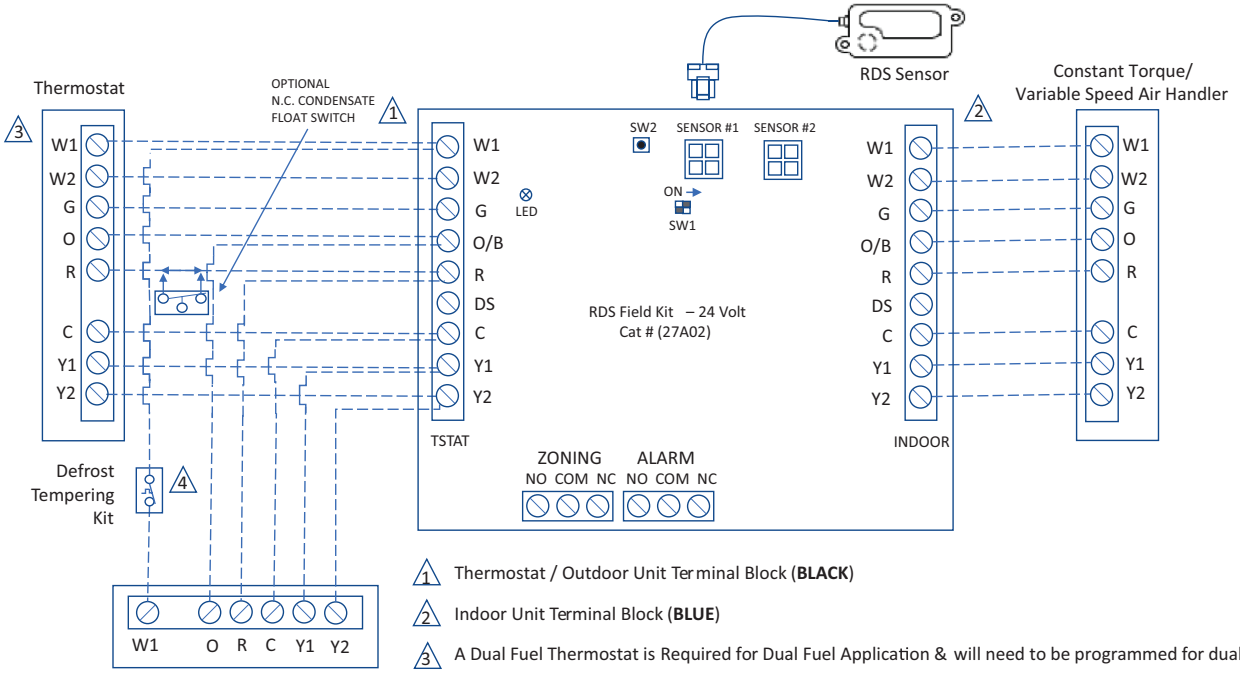

1 Thermostat / Outdoor Unit Terminal Block (**BLACK**)

2 Indoor Unit Terminal Block (**BLUE**)

3 A Dual Fuel Thermostat is Required for Dual Fuel Application & will need to be programmed for dual fuel

4 Defrost Tempering Kit is required for Dual Fuel Application

Outdoor Unitary Control

DIP and Terminals

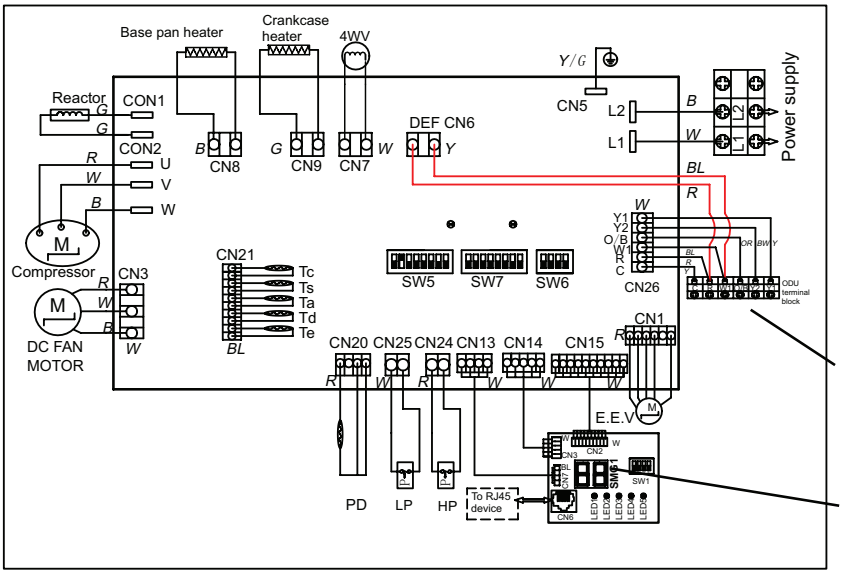

LP/HP:Low/high pressure switch
Tc:Condensing Temp.Sensor
Ts:Condensing Suction Temp.Sensor
Ta:Ambient Temp.Sensor
Td:Compressor Discharge Temp.Sensor
Te:Condensing out Temp.Sensor
PD:High pressure sensor
4WV:4 Way valve

SW5 function is shown in Table 5.
SW7 centralized controller address selection (reserved function).
SW6 test dip (do not move unless tested).

FIGURE 9

Display Board

Information labels concerning the outdoor control 2-segment display and DIP operations are available on the unit control panel cover.

Alarms

Alarm information is provided on the unit control panel cover.

Programing Unit Capacity

The EL18KSLV units are available from the factory in 2, 3 or 5 ton capacities. If the intended capacity for the application is 2, 3 or 5 ton, skip this section.

The 5 ton units are field convertible to 4 ton to efficiently perform for the required application.

To convert a 5 ton unit to 4 ton operation, utilize the control board DIP SW5 to configure ODU Tonnage to -048 as shown in table 2.

Charge Mode DIP

The charge mode of cooling and heating can be adjusted through the DIP switch of the display board.

Charge Mode Operation with a Conventional 24VAC Heat Pump Thermostat

Charge Mode Display String

When unit is in the cooling charge mode, 2-segment display displays the current Subcooling.

Charge Mode DIP Operation in the Cooling Mode

The operation mode of DIP switch SW1 on the display board is shown in table 3. After the system is started, the system needs to be stabilized for 10 minutes. The subcooling displayed after 10 minutes is compared with the target subcooling in table 4. Less than the target, add refrigerant; greater than the target, need to reduce refrigerant.

Charge Mode DIP Operation in the Heat Pump Heating Mode

To test the supercooling degree in heating mode, an external pressure gauge and thermometer need to be connected as shown in figure 10. The saturation temperature of the refrigerant is checked using table 4, and the current supercooling degree is calcutated by using the saturation temperature minus the thermometer temperature. The target supercooling degree is compared with that in table 5.

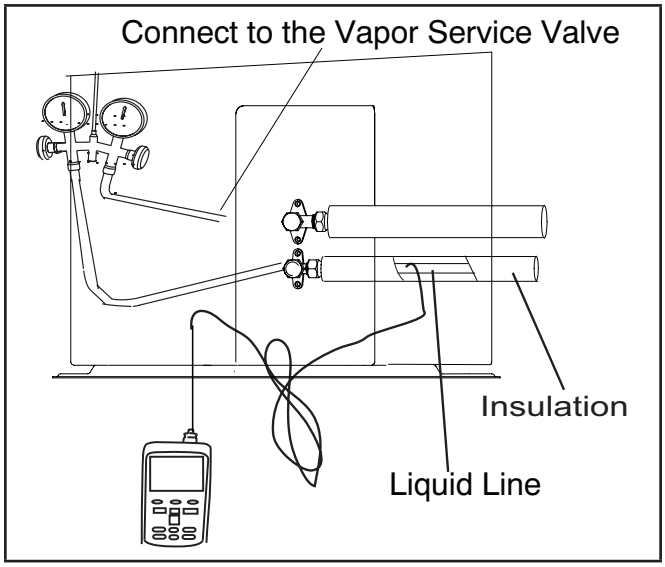

FIGURE 10

SW5							
SW 5_1_ 2_3	ODU Tonnage		[1]	[2]	[3]		
		ON		■		-024	
		OFF	■		■		
		ON			■	-036	
		OFF	■	■			
		ON		■	■	-048	
		OFF	■				
		ON	■	■	■	-060 (default for -060 units)	
		OFF					
SW5 _4	Communication Mode	ON				Reserved	
		OFF				24V control	
SW5 _5_6	24V Control energy efficiency testing and actual use of internal machine selection	[5]		[6]		24V control IDU set	
		OFF		OFF		IDU 1	For AHU Test & Use
		OFF		ON		IDU 2	For Coil + Furnace Test & Use
		ON		OFF		IDU 3	For A-coil Test
		ON		ON		IDU 4	Reserved
SW5 _7	24V Control Heat Pump Changeover Valve	ON				Heating changeover valve: Use this setting if the thermostat heating is “B”.	
		OFF				Cooling changeover valve: Use this setting if the thermostat cooling is “O”. (default)	
SW5 _8	Reserved	ON				Reserved	
		OFF				Reserved	

TABLE 2. Control Board DIP SW5

SW1		1	2	3	4		
		Dehum. 1	**Dehum. 2**	**Heating**	**Defrost**	COOLING	HEATING
MODE	**ON**					DEFAULT COOLING	DEFAULT HEATING+DEFAULT DEFROST
	OFF	▮	▮	▮	▮		
	ON				▮	DEFAULT COOLING	DEFAULT HEATING+STRONG DEFROST
	OFF	▮	▮	▮			
	ON			▮		DEFAULT COOLING	COMFORT HEATING OR FULL-LOAD AIRFLOW RATE <300 SCFM/TON+DEFAULT DEFROST
	OFF	▮	▮		▮		
	ON			▮	▮	DEFAULT COOLING	COMFORT HEATING OR FULL-LOAD AIRFLOW RATE <300 SCFM/TON+STRONG DEFROST
	OFF	▮	▮				
	ON	▮				DEHUM. 1 OR FULL-LOAD AIRFLOW RATE <300 SCFM/TON	DEFAULT HEATING+DEFAULT DEFROST
	OFF		▮	▮	▮		
	ON	▮			▮	DEHUM. 1 OR FULL-LOAD AIRFLOW RATE <300 SCFM/TON	DEFAULT HEATING+STRONG DEFROST
	OFF		▮	▮			
	ON	▮		▮		DEHUM. 1 OR FULL-LOAD AIRFLOW RATE <300 SCFM/TON	COMFORT HEATING OR FULL-LOAD AIRFLOW RATE <300 SCFM/TON+DEFAULT DEFROST
	OFF		▮		▮		
	ON	▮		▮	▮	DEHUM. 1 OR FULL-LOAD AIRFLOW RATE <300 SCFM/TON	COMFORT HEATING OR FULL-LOAD AIRFLOW RATE <300 SCFM/TON+STRONG DEFROST
	OFF		▮				
	ON		▮			DEHUM. 2 OR FULL-LOAD AIRFLOW RATE <300 SCFM/TON	DEFAULT HEATING+DEFAULT DEFROST
	OFF	▮		▮	▮		
	ON		▮		▮	DEHUM. 2 OR FULL-LOAD AIRFLOW RATE <300 SCFM/TON	DEFAULT HEATING+STRONG DEFROST
	OFF	▮		▮			
	ON		▮	▮		DEHUM. 2 OR FULL-LOAD AIRFLOW RATE <300 SCFM/TON	COMFORT HEATING OR FULL-LOAD AIRFLOW RATE <300 SCFM/TON+DEFAULT DEFROST
	OFF	▮			▮		
	ON		▮	▮	▮	DEHUM. 2 OR FULL-LOAD AIRFLOW RATE <300 SCFM/TON	COMFORT HEATING OR FULL-LOAD AIRFLOW RATE <300 SCFM/TON+STRONG DEFROST
	OFF	▮					
FORCED & CHARGE MODE	**ON**	▮	▮			TEST MODE	
	OFF			▮	▮		
	ON	▮	▮		▮	TEST MODE	
	OFF			▮			
	ON	▮	▮	▮		CHARGE MODE FOR HEATING	
	OFF				▮		
	ON	▮	▮	▮	▮	CHARGE MODE FOR COOLING	
	OFF						
FUNC-TION DESC-RIPTION	1.When dehum. mode 1 is effective, it reduces the unit's target evaporation temperature by 2~5 ° F; When dehum. mode 2 is effective, it reduces the unit's target evaporation temperature by 5~7 ° F.						
	2.When the comfortable heating mode is effective, it increases the unit's target condensation temperature by 2 ~ 5 ° F.						
	3.SW1-4 perform manual defrosting from off to on (only the heating mode is valid, the exit conditions refer to normal defrosting, each dip switch from OFF to ON only enters once, the next time you enter must meet the dip switch from OFF to ON, after manual defrosting, the dip switch is still ON, enter the strong defrosting mode).						
	4.When strong defrosting is effective, the unit defrosting interval will be shorter, and the defrosting time will be increased, which is suitable for areas with high humidity.						

TABLE 3. Board Display DIP SW1

Indoor Unit Matches and Subcooling Charge Levels (TXV System) and Additional Charge (15 ft. Line set)

Indoor Matchup	Subcool		Additional Charge
	Heat(±3℉)	cool(±1℉)	Lbs/oz
2 Ton HP			
CBK45UHP-018	4.0	6.0	1 lb 2 oz
CBK45UHV-018	4.0	6.0	1 lb 2 oz
CBK45UHP-024	4.0	6.0	1 lb 5 oz
CBK45UHE-024	4.0	6.0	1 lb 5 oz
CBK45UHV-024	4.0	6.0	1 lb 5 oz
CBK45UHP-030	6.0	6.0	1 lb 9 oz
CBK45UHE-030	6.0	6.0	1 lb 9 oz
CBK45UHV-030	6.0	6.0	1 lb 9 oz
CBK47UHE-024	6.0	5.0	0 lb 14 oz
CBK47UHE-030	6.0	5.0	0 lb 14 oz
CBK48MV-018/024	6.0	5.0	0 lb 14 oz
CBK48MV-030	4.0	11.0	1 lb 12 oz
CK40CT-24B	4.0	5.0	1 lb 2 oz
CK40CT-30A	4.0	6.0	1 lb 9 oz
CK40CT-30B	4.0	6.0	1 lb 9 oz
CK40CT-36A	4.0	11.0	1 lb 12 oz
CK40CT-36B	4.0	11.0	1 lb 12 oz
CK40HT-18A	4.0	7.0	0 lb 0 oz
CK40HT-24A	4.0	5.0	0 lb 7 oz
CK40HT-24B	4.0	5.0	0 lb 7 oz
CK40HT-30A	4.0	5.0	0 lb 11 oz
CK40HT-30B	4.0	5.0	1 lb 9 oz
CK40DT-24A	5.0	6.0	1 lb 2 oz
CK40DT-24B	5.0	6.0	1 lb 2 oz
3 Ton HP			
CBK45UHP-036	6.0	13.0	1 lb 5 oz
CBK45UHE-036	6.0	13.0	1 lb 5 oz
CBK45UHV-036	6.0	13.0	1 lb 5 oz
CBK45UHP-042	6.0	13.0	1 lb 5 oz
CBK45UHE-042	6.0	13.0	1 lb 5 oz
CBK45UHV-042	6.0	13.0	1 lb 5 oz
CBK47UHE-036	7.0	11.0	1 lb 2 oz
CBK47UHE-042	7.0	11.0	1 lb 2 oz
CBK48MV-036	7.0	11.0	1 lb 2 oz
CBK48MV-042	6.0	11.0	2 lb 0 oz
CK40CT-30A	10.0	12.0	0 lb 14 oz
CK40CT-30B	10.0	12.0	0 lb 14 oz
CK40CT-36A	10.0	11.0	1 lb 2 oz
CK40CT-36B	10.0	11.0	1 lb 2 oz
CK40HT-30A	8.0	7.0	0 lb 4 oz
CK40HT-30B	10.0	12.0	1 lb 2 oz
CK40HT-36A	8.0	10.0	0 lb 11 oz
CK40HT-36B	8.0	7.0	0 lb 0 oz
CK40HT-36C	8.0	10.0	0 lb 14 oz
CK40DT-30/36B	10.0	12.0	1 lb 0 oz
CK40DT-42B	7.0	9.0	2 lb 0 oz

Indoor Matchup	Subcool		Additional Charge
	Heat(±3℉)	cool(±1℉)	Lbs/oz
4 Ton HP			
CBK45UHP-042	13.0	7.0	0 lb 11 oz
CBK45UHE-042	13.0	7.0	0 lb 11 oz
CBK45UHV-042	13.0	7.0	0 lb 11 oz
CBK45UHE-048	14.0	7.0	0 lb 11 oz
CBK45UHV-048	14.0	7.0	0 lb 11 oz
CBK47UHE-042	12.0	7.0	0 lb 6 oz
CBK47UHE-048	14.0	7.0	0 lb 11 oz
CBK48MV-042	14.0	7.0	0 lb 11 oz
CBK48MV-048	14.0	7.0	0 lb 11 oz
CK40CT-48B	15.0	5.0	0 lb 6 oz
CK40CT-48C	15.0	5.0	0 lb 6 oz
CK40CT-49C	14.0	5.0	0 lb 7 oz
CK40HT-42B	6.0	4.0	1 lb 9 oz
CK40HT-42C	8.0	2.0	0 lb 0 oz
CK40HT-48B	15.0	5.0	0 lb 7 oz
CK40HT-48C	13.0	5.0	0 lb 7 oz
CK40DT-42B	6.0	5.0	0 lb 11 oz
CK40DT-48C	6.0	5.0	0 lb 13 oz
5 Ton HP			
CBK45UHE-060	6.0	4.0	0 lb 11 oz
CBK45UHV-060	6.0	4.0	0 lb 11 oz
CBK47UHE-060	6.0	4.0	1 lb 11 oz
CBK48MV-060	6.0	4.0	1 lb 11 oz
CK40CT-50/60C	6.0	4.0	0 lb 5 oz
CK40CT-60C	6.0	4.0	0 lb 7 oz
CK40CT-60D	6.0	4.0	0 lb 7 oz
CK40HT-51/61C	6.0	4.0	0 lb 11 oz
CK40HT-60D	6.0	4.0	1 lb 9 oz
CK40DT-50/60C	6.0	6.0	0 lb 7 oz
CK40DT-60D	6.0	6.0	0 lb 7 oz

TABLE 4. Indoor Unit Matches and Subcooling Charge Levels (TXV System) and Additional Charge (15ft. Line Set)

°F	Psig	°F	Psig	°F	Psig	°F	Psig	°F	Psig	°F	Psig	°F	Psig	°F	Psig
31	94	46	126	61	164	76	210	91	264	106	328	121	401	136	486
32	96	47	128	62	167	77	213	92	268	107	332	122	406	137	492
33	98	48	130	63	170	78	217	93	272	108	337	123	412	138	498
34	100	49	133	64	173	79	220	94	276	109	341	124	417	139	505
35	102	50	135	65	176	80	224	95	280	110	346	125	423	140	511
36	104	51	138	66	179	81	227	96	284	111	351	126	428	141	517
37	106	52	140	67	182	82	231	97	288	112	356	127	434	142	524
38	108	53	143	68	185	83	234	98	293	113	361	128	439	143	530
39	110	54	145	69	188	84	238	99	297	114	365	129	445	144	537
40	112	55	148	70	191	85	241	100	301	115	370	130	451	145	543
41	114	56	151	71	194	86	245	101	305	116	375	131	456	146	550
42	117	57	153	72	197	87	249	102	310	117	380	132	462	147	557
43	119	58	156	73	200	88	253	103	314	118	386	133	468	148	563
44	121	59	159	74	203	89	256	104	319	119	391	134	474	149	570
45	123	60	161	75	207	90	260	105	323	120	396	135	480	150	577

TABLE 5. HFC-454B Temperature (°F) Pressure (Psig)

Operating Temperature Pressures

Minor variations in these pressures may be expected due to differences in installations. Significant differences could mean that the system is not properly charged or that a problem exists with some component in the system.

NOTE *– Pressures shown are under Charge mode, not normal operating pressures.*

°F (°C)	-024			-036			-048 / -060		
	Liq. (PSI)	Vap. (PSI)	IDU SCFM	Liq. (PSI)	Vap. (PSI)	IDU SCFM	Liq. (PSI)	Vap. (PSI)	IDU SCFM
Heating Operation									
20(-7)	248	61	800	243	63	1050	254	59	1600
30(-1)	259	74		261	76		268	73	
35(2)	268	83		365	82		274	79	
40(4)	274	86		271	91		278	85	
50(10)	290	105		286	110		291	98	
60(16)	308	120		300	124		299	107	
Cooling Operation									
65(18)	202	137	800	224	133	1050	408	142	1600
70(21)	221	137		244	133		379	141	
75(24)	240	138		265	134		362	139	
80(27)	261	139		286	135		336	138	
85(29)	275	138		306	134		312	137	
90(32)	298	140		324	136		289	135	
95(35)	322	142		351	138		267	133	
100(38)	349	144		375	140		254	132	
105(41)	374	145		402	141		234	129	
110(43)	394	146		420	142		215	127	
115(46)	420	147		449	143		199	126	

TABLE 6. Charge Mode Operating Pressures – Liquid ±10 and Vapor ±5 PSIG

Unit Operation

EL18KSLV Unit Operation with a Conventional 24VAC Non-Communicating 2-Stage Thermostat

When the EL18KSLV unit is installed with a conventional 24VAC non-communicating 2-stage thermostat, a Y1 first stage cooling demand will initiate cooling operation and first stage indoor blower operation. The compressor will be controlled in the variable capacity mode by varying the compressor capacity to obtain the target suction pressure set point. The Y2 second stage cooling demand will initiate second stage blower operation. Increased air volume will increase the load on the indoor coil and increase the suction pressure. The EL18KSLV compressor capacity will continue to be controlled based upon the suction pressure. The unit capacity will be controlled in the variable capacity mode throughout the range of capacity from minimum capacity to maximum capacity. If the Y2 demand remains after 30 minutes, the EL18KSLV control will begin to ramp up the compressor capacity until maximum capacity is achieved. The EL18KSLV unit will cycle off once the thermostat demand is satisfied.

EL18KSLV Unit Operation with a Conventional 24VAC Non-Communicating Single-Stage Thermostat

When the EL18KSLV unit is installed with a conventional 24VAC non-communicating single-stage thermostat, a Y1 first stage cooling demand will initiate cooling operation and cooling indoor blower operation. In single stage thermostat applications, a jumper must be installed between Y1 and Y2 on the EL18KSLV outdoor control. The compressor will be controlled in the variable capacity mode by varying the compressor capacity to obtain the target suction pressure set point. If the cooling demand remains after 30 minutes, the EL18KSLV control will begin to ramp up the compressor capacity until maximum capacity is achieved. The EL18KSLV unit will cycle off once the thermostat demand is satisfied.

UNIT START-UP

⚠ IMPORTANT

If unit is equipped with a crankcase heater, it should be energized 24 hours before unit start-up to prevent compressor damage as a result of slugging.

1 - Rotate fan to check for binding.
2 - Inspect all factory- and field-installed wiring for loose connections.
3 - After evacuation is complete, open the liquid line and vapor line service valve stems to release the refrigerant charge (contained in outdoor unit) into the system.
4 - Replace the stem caps and tighten to the value listed in table 10.
5 - Check voltage supply at the disconnect switch. The voltage must be within the range listed on the unit's nameplate. If not, do not start the equipment until you have consulted with the power company and the voltage condition has been corrected.
6 - Connect manifold gauge set for testing and charging.
7 - Turn on power to the indoor unit and close the outdoor unit disconnect switch to start the unit. Start-up and testing should be performed with the unit operating at the maximum cooling capacity (100% capacity). The unit can be operated at maximum capacity by entering the test mode at the thermostat.
8 - Recheck voltage while the unit is running. Power must be within range shown on the unit nameplate.
9 - Check system for sufficient refrigerant using the procedures outlined under *Checking Refrigerant Charge.*
10 - Test functionality of Refrigerant Detection System.

HEAT PUMP CONTROL – DEFROST OPERATION

A full description of the heat pump control can be found in the detailed installation and service procedure manual available on LennoxPros.com.

The master control measures differential temperatures to detect when the system is performing poorly because of frost build-up on the outdoor coil. The heat pump control self-calibrates when the defrost system starts and after each system defrost cycle. The heat pump control monitors ambient temperature, outdoor coil temperature, and total run-time to determine when a defrost cycle is required. The coil temperature sensor is designed with a spring clip to allow mounting to the outside coil tubing. The location of the coil sensor is important for proper defrost operation.

Detailed information is given in the EL18KSLV Installation and Service Procedures Corp. 1252-L11, which is available on LennoxPros.com.

***NOTE** – The heat pump control accurately measures the performance of the system as frost accumulates on the outdoor coil. This typically will translate into longer running time between defrost cycles as more frost accumulates on the outdoor coil before the heat pump control initiates defrost cycles.*

OPERATING MANIFOLD GAUGE SET AND SERVICE VALVES

The liquid and vapor line service valves are used for removing refrigerant, flushing, leak testing, evacuating, checking charge and charging.

Each valve is equipped with a service port which has a factory-installed valve stem. Figures 12 and 13 provide information on how to access and operate both angle- and ball-type service valves.

Torque Requirements

When servicing or repairing heating, ventilating and air conditioning components, ensure the fasteners are appropriately tightened. Table 10 lists torque values for fasteners.

TABLE 7. TORQUE REQUIREMENTS

Parts	Recommended Torque	
Service valve cap	8 ft.-lb.	11 NM
Sheet-metal screws	16 in.-lb.	2 NM
Machine screws #10	28 in.-lb.	3 NM
Compressor bolts	90 in.-lb.	10 NM
Gauge port seal cap	8 ft.-lb.	11 NM

⚠ IMPORTANT

To prevent stripping of the various caps used, the appropriately sized wrench should be used and fitted snugly over the cap before tightening.

Using Manifold Gauge Set

When checking the system charge, only use a manifold gauge set that features low loss anti-blow back fittings.

Manifold gauge set used with R454B refrigerant systems must be capable of handling the higher system operating pressures. The gauges should be rated for use with pressures of 0 - 800 psig on the high side and a low side of 30" vacuum to 250 psig with dampened speed to 500 psi. Gauge hoses must be rated for use at up to 800 psig of pressure with a 4000 psig burst rating.

OPERATING BALL-TYPE SERVICE VALVE

1 - Remove stem cap with an appropriately sized wrench.

2 - Use an appropriately sized wrench to open. To open valve, rotate stem counterclockwise 90°. To close, rotate stem clockwise 90°.

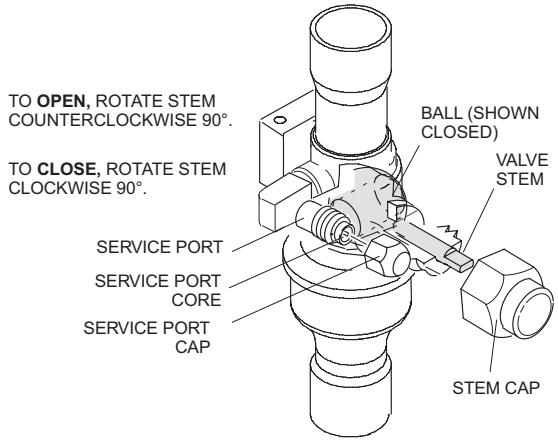

FIGURE 11

OPERATING ANGLE-TYPE SERVICE VALVE

1 - Remove stem cap with an appropriately sized wrench.

2 - Use a service wrench with a hex-head extension (3/16" for liquid line valve sizes and 5/16" for vapor line valve sizes) to back the stem out counterclockwise as far as it will go.

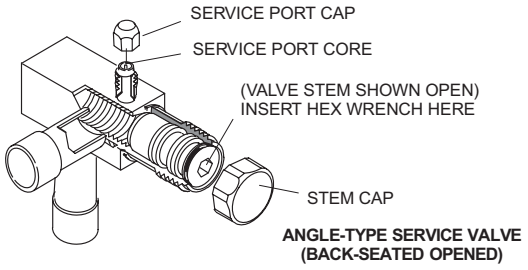

When service valve is **OPEN**, the service port is open to line set, indoor and outdoor unit.

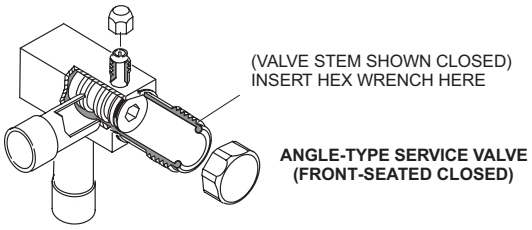

When service valve is **CLOSED**, the service port is open to the line set and indoor unit.

NOTE - *A label with specific torque requirements may be affixed to the stem cap. If the label is present, use the specified torque.*

FIGURE 12

ACCESS SERVICE PORT

A service port cap protects the service port core from contamination and serves as the primary leak seal.

1 - Remove service port cap with an appropriately sized wrench.

2 - Connect gauge set to service port.

3 - When testing is completed, replace service port cap and tighten as follows:

- With torque wrench, finger tighten and torque cap per table 2.
- Without torque wrench, finger tighten and use an appropriately sized wrench to turn an additional 1/6 turn clockwise.

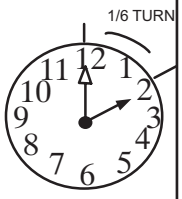

Reinstall Stem Cap

Stem cap protects the valve stem from damage and serves as the primary seal. Replace the stem cap and tighten as follows:

- With torque wrench, finger tighten and then torque cap per table 2.
- Without torque wrench, finger tighten and use an appropriately sized wrench to turn an additional 1/12 turn clockwise.

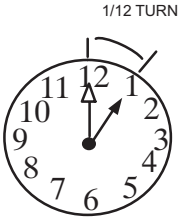

FIGURE 13

Charging

Verify the unit is electrically grounded before charging the system. Extreme care shall be taken not to overfill the refrigerating system.

Charge should be checked and adjusted using information outlined in this section and in the tables provided on the charging label on the unit's control access panel.

R454B is a zeotropic blend of two refrigerants. At any given refrigerant pressure, R454B will have two saturation temperatures, a saturated liquid temperature and a saturated vapor temperature. See R454B Refrigerant Pressure Temperature Chart for saturation temperatures.

R454B Units must be charged with liquid refrigerant. Follow conventional charging procedures when charging the system. The technician is required to mark the total charge of the installed system on the unit nameplate, which includes the nameplate charge (factory charge) and additional charge that is added to the system at the time of installation.

The R454B refrigerant cylinders are provided with a ¼" LH flare connection, therefore a ¼" LH female flare adapter will be required. Connect manifold gauges and hoses following conventional charging procedures. Position the R454B refrigerant cylinder to deliver liquid refrigerant.

EL18KSLV unit is factory-charged with enough R454B refrigerant to accommodate a 15-foot length of refrigerant piping. For line lengths over 15 feet, add 2.75 oz of refrigerant for every 5 feet of piping beyond 15 feet.

Initiate a call for cooling and allow the refrigerant pressures and temperatures to stabilize. Adjust the charge to using the subcooling method. The unit charging label provides the target Subcooling Values. Record the liquid line temperature. Measure the liquid line pressure and use the value to determine the Saturated Liquid Temperature. Calculate subcooling by subtracting the liquid line temperature from the Saturated liquid temperature.

Subcooling = Saturated Liquid Temperature – Liquid Line Temperature

Compare the results with the unit charging label.

Once system charging has been completed, the additional charge and total charge must be marked on the unit nameplate. Total Charge = Factory Charge + Additional charge. The total charge is marked on the space adjacent to "Total Charge". See nameplate below.

Detailed information is given in the EL18KSLV Installation and Service Procedures manual, which is available on LennoxPros.com.

Refrigerant

Refrigerant (refrigerant)/ Factory Charge (Charge d'usine) Charge Added (Charge accrue) Total Charge (Charge total)	R454B/ 1950g(69oz) ( )g( )oz ( )g( )oz
Design Pressure (Hi-Lo) / Pression de calcul (Haute-Bassee)	3.50-1.20MPa (508-174psig)

⚠ IMPORTANT

System charging should be performed with the unit operating at the maximum cooling capacity (100% capacity). The unit can be operated at maximum capacity by entering the test mode at the thermostat.

Refrigerant Charge per Line Set Length

LIQUID LINE DIA.	OUNCES PER 5 FEET (G PER 1.5 M) ADJUST FROM 15 FEET (4.6 M) LINE SET*
3/8" (9.5 MM)	2.75 OUNCES PER 5' (85 G PER 1.5 M)

*If line length is greater than 15 ft. (4.6 m), add this amount. If line length is less than 15 ft. (4.6 m), subtract this amount.

NOTE – Insulate liquid line when it is routed through areas where the surrounding ambient temperature could become higher than the temperature of the liquid line or when pressure drop is equal to or greater than 20 psig.

High Pressure Switch (S4)

This unit is equipped with a high pressure switch which is located on the compressor discharge line. The SPST, normally closed pressure switch opens when compressor discharge line pressure rises above the factory setting of 590 ± 15 psig and automatically resets at 418 ± 15 psig.

Homeowners Information

⚠ CAUTION

Before attempting to perform any service or maintenance, turn the electrical power to unit OFF at disconnect switch.

In order to ensure peak performance, your system must be properly maintained. Clogged filters and blocked airflow prevent your unit from operating at its most efficient level. The system should be inspected and serviced before each cooling and heating season by a licensed professional HVAC service technician (or equivalent).

Homeowner Maintenance

The following maintenance may be performed by the homeowner.

- Contact a licensed professional HVAC technician to schedule inspection and maintenance appointments for your equipment before each heating and cooling season.
- Check the indoor unit filter each month and replace the filter, if necessary.

- Have your Lennox dealer show you where your indoor unit filter is located. It will be either at the indoor unit (installed internal or external to the cabinet) or behind a return air grille in the wall or ceiling. Check the filter monthly and clean or replace it as needed. Disposable filters should be replaced with a filter of the same type and size.
- Check the indoor unit drain line for obstructions monthly. The indoor coil is equipped with a drain pan to collect condensate formed as your system removes humidity from the inside air. Have your dealer show you the location of the drain line and how to check for obstructions. (This would also apply to an auxiliary drain, if installed.)
- Check the area around the outdoor unit monthly and remove any obstructions that may restrict airflow to the outdoor unit. This would include grass clippings, leaves, or papers that may have settled around the unit.
- Trim shrubbery away from the unit and periodically check for debris which collects around the unit.
- During the winter months, keep the snow level below the louvered panels.

***NOTE** - The filter and all access panels must be in place any time the unit is in operation. If you are unsure about the filter required for your system, call your Lennox dealer for assistance.*

⚠ IMPORTANT

Sprinklers and soaker hoses should not be installed where they could cause prolonged exposure to the outdoor unit by treated water. Prolonged exposure of the unit to treated water (i.e., sprinkler systems, soakers, waste water, etc.) will corrode the surface of the steel and aluminum parts, diminish performance and affect longevity of the unit.

Thermostat Operation

See the thermostat homeowner manual for instructions on how to operate your thermostat.

Heat Pump Operation

Your new Lennox heat pump has several characteristics that you should be aware of:

- Heat pumps satisfy heating demand by delivering large amounts of warm air into the living space. This is quite different from gas- or oil-fired furnaces or an electric furnace which deliver lower volumes of considerably hotter air to heat the space.
- Do not be alarmed if you notice frost on the outdoor coil in the winter months. Frost develops on the outdoor coil during the heating cycle when temperatures are below 45°F (7°C). The heat pump control activates a defrost cycle lasting 5 to 15 minutes at preset intervals to clear the outdoor coil of the frost.
- During the defrost cycle, you may notice steam rising from the outdoor unit. This is a normal occurrence. The thermostat may engage auxiliary heat during the defrost cycle to satisfy a heating demand; however, the unit will return to normal operation at the conclusion of the defrost cycle.

Pre-Service Check

If your system fails to operate, check the following before calling for service:

- Verify room thermostat settings are correct.
- Verify that all electrical disconnect switches are ON.
- Check for any blown fuses or tripped circuit breakers.
- Verify unit access panels are in place.
- Verify air filter is clean.

If service is needed, locate and write down the unit model number and have it handy before calling.

Professional Maintenance

Your heating and air conditioning system should be inspected and maintained twice each year (before the start of the cooling and heating seasons) by a licensed professional HVAC technician. You can expect the technician to check the following items. **These checks may only be conducted by a licensed professional HVAC technician**.

Outdoor Unit

1 - Inspect component wiring for loose, worn or damaged connections. Also check for any rubbing or pinching of wires. Confirm proper voltage plus amperage of outdoor unit.

2 - Check the cleanliness of outdoor fan and blade condition (cracks) and clean or replace them, if necessary.

3 - Inspect base pan drains for debris and clean as necessary.

4 - Inspect the condition of refrigerant piping and confirm that pipes are not rubbing copper-to-copper. Also, check the condition of the insulation on the refrigerant lines. Repair, correct, or replace as necessary.

5 - Test capacitor. Replace as necessary.

6 - Inspect contactor contacts for pitting or burn marks. Replace as necessary.

7 - Check outdoor fan motor for worn bearings/ bushings. Replace as necessary.

8 - Inspect and clean outdoor coils, if necessary and note any damage to coils or signs of leakage.

Indoor Unit (Air Handler or Furnace)

1 - Inspect component wiring for loose, worn or damaged connections. Confirm proper voltage plus amperage of indoor unit.

2 - Inspect and clean or replace air filters in indoor unit.

3 - Check the cleanliness of indoor blower and clean blower, if necessary.

4 - Inspect the indoor coil drain pans and condensate drains for rust, debris, obstructions, leaks or cracks. Pour water in pans to confirm proper drainage from the pan through to the outlet of the pipe. Clean or replace as necessary.

5 - Inspect and clean indoor coil, if necessary.

6 - Inspect the condition of the refrigerant lines and confirm that pipes are not rubbing copper-to-copper. Also, ensure that refrigerant pipes are not being affected by indoor air contamination. Check condition of insulation on the refrigerant lines. Repair, correct, or replace as necessary.

7 - Inspect the duct system for leaks or other problems. Repair or replace as necessary.

8 - Check for bearing/bushing wear on indoor blower motor. Replace as necessary.

9 - If your system is matched with a gas- or oil-fired furnace for heating, indoor unit service will also include inspection and cleaning of the burners, and a full inspection of the gas valve, heat exchanger and flue (exhaust) system.

10 - Check functionality of Refrigerant Detection System.

11 - Inspect refrigerant detection sensor.

General System Test with System Operating

1 - Your technician should perform a general system test. He will turn on the air conditioner to check operating functions such as the startup and shutoff operation. He will also check for unusual noises or odors, and measure indoor/outdoor temperatures and system pressures as needed. He will check the refrigerant charge per the charging sticker information on the outdoor unit.

2 - Verify that system total static pressure and airflow settings are within specific operating parameters.

3 - Verify correct temperature drop across indoor coil.

EL18KSLV Start-Up and Performance Checklist

Customer _____ Address _____

Indoor Unit Model _____ Serial _____

Outdoor Unit Model _____ Serial _____

Notes: _____

_____

START UP CHECKS

Refrigerant Type: _____

Input Amps: _____ Actual Amps ___ Rated Volts _____ Actual Volts _____

Condenser Fan Full Load Amps _____ Actual Amps: __

COOLING MODE

Suction Pressure: _____ **Liquid Pressure:** ____

Supply Air **Temperature:** _____ Ambient **Temperature:** _____ Return Air: **Temperature:** _____

System Refrigerant Charge (Refer to manufacturer's information on unit or installation instructions for required subcooling and approach temperatures.)

Subcooling: Saturated Condensing Temperature (A) *minus* Liquid Line Temperature (B)	A	—	B	=	SUBCOOLING
Approach: Liquid Line Temperature (A) *minus* Outdoor Air Temperature (B)	A	—	B	=	APPROACH
Indoor Coil Temperature Drop (18 to 22°F) Return Air Temperature (A) *minus* Supply Air Temperature (B)	A	—	B	=	COIL TEMP DROP