©2025 Lennox Industries Inc.
Dallas, Texas, USA

THIS MANUAL MUST BE LEFT WITH THE HOMEOWNER FOR FUTURE REFERENCE

INSTALLATION INSTRUCTIONS

Elite® Series EL22KCV Units

AIR CONDITIONER
508484-01
6/2025

PACKING LIST

OUTDOOR UNIT

WARRANTY CERTIFICATE

RAST 6-PIN CONNECTORS (2)

General

This EL22KCV outdoor air conditioner **with all-aluminum coil** is designed for use with R454B refrigerant only.

This unit must be installed with an approved indoor air handler or coil. For AHRI Certified system match-ups and expanded ratings, visit www.LennoxPros.com.

The EL22KCV variable capacity unit may be installed with an S40 communicating thermostat or a standard 24VAC non-communicating thermostat. See field wiring diagrams for wiring details.

These instructions are intended as a general guide and do not supersede local codes in any way. Consult authorities having jurisdiction before installation.

***NOTE** – This unit EL22KCV is a PARTIAL UNIT AIR CONDITIONER, complying with PARTIAL UNIT requirements of this Standard, and must only be connected to other units that have been confirmed as complying to corresponding PARTIAL UNIT requirements of this Standard, UL 60335-2-40/CSA C22.2 No. 60335-2-40, or UL 1995/CSA C22.2 No 236.*

⚠ WARNING

Improper installation, adjustment, alteration, service or maintenance can cause property damage, personal injury or loss of life. Installation and service must be performed by a licensed professional HVAC installer or equivalent, or service agency.

IMPORTANT: Special procedures are required for cleaning the all-aluminum coil in this unit. See page 25 in this instruction for information.

This unit must be installed with an approved indoor air handler or coil. For AHRI Certified system match-ups and expanded ratings, visit www.LennoxPros.com.

⚠ WARNING

To prevent serious injury or death:

1. Lock-out/tag-out before performing maintenance.
2. If system power is required (e.g., smoke detector maintenance), disable power to blower, remove fan belt where applicable, and ensure all controllers and thermostats are set to the “OFF” position before performing maintenance.
3. Always keep hands, hair, clothing, jewelry, tools, etc. away from moving parts.

⚠ CAUTION

As with any mechanical equipment, contact with sharp sheet metal edges can result in personal injury. Take care while handling this equipment and wear gloves and protective clothing.

0625
508484-01

SETTING THE UNIT – Clearances

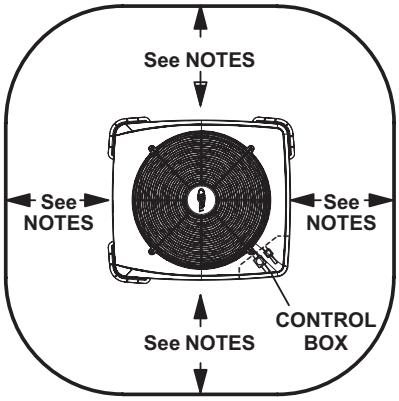

NOTES -
Service clearance of 30 in. (762 mm) must be maintained on one of the sides adjacent to the control box.

Clearance to one of the other three sides must be 36 in. (914 mm).

Clearance to one of the remaining two sides may be 12 in. (305 mm) and the final side may be 6 in. (152 mm).

A clearance of 24 in. must be maintained between two units.

48 in. (1219 mm) clearance required on top of unit.

NOTICE: Specific applications may require adjustment of the listed installation clearances to provide protection for the unit from physical damage or to avoid conditions which limit operating efficiency. (Example: Clearances may have to be increased to prevent snow or ice from falling on the top of the unit. Additional clearances may also be required to prevent air recirculation when the unit is installed under a deck or in another tight space.)

⚠ WARNING

- Do not use means to accelerate the defrosting process or to clean, other than those recommended by the manufacturer.
- The appliance shall be stored in a room without continuously operating ignition sources (for example: open flames, an operating gas appliance, or an operating electric heater).
- Do not pierce or burn.
- Be aware that refrigerants may not contain an odor.

⚠ CAUTION

Under no circumstances shall potential sources of ignition be used in the searching for or detection of refrigerant leaks. A halide torch (or any other detector using a naked flame) shall not be used.

The following leak detection methods are deemed acceptable for all refrigerant systems.

Electronic leak detectors may be used to detect refrigerant leaks but, in the case of flammable refrigerants, the sensitivity may not be adequate, or may need re-calibration. (Detection equipment shall be calibrated in a refrigerant-free area.) Ensure that the detector is not a potential source of ignition and is suitable for the refrigerant used. Leak detection equipment shall be set at a percentage of the LFL of the refrigerant and shall be calibrated to the refrigerant employed, and the appropriate percentage of gas (25 % maximum) is confirmed. Leak detection fluids are also suitable for use with most refrigerants but the use of detergents containing chlorine shall be avoided as the chlorine may react with the refrigerant and corrode the copper pipe-work. If a leak is suspected, all naked flames shall be removed/extinguished. If a leakage of refrigerant is found which requires brazing, all of the refrigerant shall be recovered from the system, or isolated (by means of shut off valves) in a part of the system remote from the leak.

⚠ WARNING

Every working procedure that affects safety means shall only be carried out by competent persons. This appliance is not to be used by persons (including children) with reduced physical, sensory or mental capabilities, or lack of experience and knowledge, unless they have been given supervision or instruction concerning use of the appliance by a person responsible for their safety. Children should be supervised to ensure they do not play with the appliance.

⚠ CAUTION

Some soaps used for leak detection are corrosive to certain metals. Carefully rinse piping thoroughly after leak test has been completed. Do not use matches, candles, flame or other sources of ignition to check for gas leaks.

⚠ IMPORTANT

After completion of field piping for split systems, the field pipework shall be pressure tested with an inert gas and then vacuum tested prior to refrigerant charging, according to the following requirements;

– Field-made refrigerant joints indoors shall be tightness tested. The test method shall have a sensitivity of .2 oz. per year of refrigerant or better, under pressure.

No leak shall be detected.

⚠ WARNING

If this appliance is conditioning a space with an area smaller than TAmin or stored in a space with an area smaller than Amin as defined by this instruction, then that space must be without continuously operating open flames (e.g. an operating gas appliance) or other potential ignition sources (e.g. an operating electric heater or similar hot surface). A flame-producing device may be installed in the same space if the device is provided with an effective flame arrest system.

TAmin Table

Charge (lb)	10.0	15.0	20.0	25.0	30.0
Charge (kg)	4.5	6.8	9.1	11.3	13.6
Minimum Conditioned Area (ft2)	150.9	226.4	301.9	377.4	452.8
Minimum Conditioned Area (m2)	14.0	21.0	28.0	35.1	42.1

***NOTE** – Multiply values in TAmin table by the Altitude Adjustment Factors to correct TAmin based on installed altitude.*

Altitude Adjustment Factor

Altitude (m)	0	200	400	600	800	1000	1200	1400	1600
Altitude (ft)	0	660	1310	1970	2620	3280	3940	4590	5250
Adj. Factor	1	1	1	1	1.02	1.05	1.04	1.1	1.12
Altitude (m)	1600	1800	2000	2200	2400	2600	2800	3000	3200
Altitude (ft)	5250	5910	6560	7220	7870	8530	9190	9840	10500
Adj. Factor	1.12	1.15	1.18	1.21	1.25	1.28	1.32	1.36	1.4

Qmin Table

Refrigerant Charge lb (kg)	CFM Required	Refrigerant Charge lb (kg)	CFM Required
5 (2.3)	135	18 (8.1)	487
6 (2.7)	162	19 (8.6)	514
7 (3.2)	189	20 (9.1)	541
8 (3.6)	216	21 (9.5)	568
9 (4.1)	244	22 (10)	595
10 (4.5)	271	23 (10.4)	622
11 (5)	298	24 (10.9)	649
12 (5.4)	325	25 (11.3)	676
13 (5.9)	352	26 (11.7)	704
14 (6.4)	379	27 (12.2)	731
15 (6.8)	406	28 (12.7)	758
16 (7.3)	433	29 (13.2)	785
17 (7.7)	460	30 (13.6)	812

***NOTE** – Qmin minimum airfow requirement for refrigerant leak mitigation.*

⚠ IMPORTANT

In addition to conventional charging procedures, the following requirements shall be followed.

- Ensure that contamination of different refrigerants does not occur when using charging equipment. Hoses or lines shall be as short as possible to minimize the amount of refrigerant contained in them.
- Cylinders shall be kept in an appropriate position according to the instructions.
- Ensure that the REFRIGERATING SYSTEM is earthed prior to charging the system with refrigerant.
- Label the system when charging is complete (if not already).
- Extreme care shall be taken not to overfill the REFRIGERATING SYSTEM.

Prior to recharging the system, it shall be pressure-tested with the appropriate purging gas. The system shall be leak tested on completion of charging, but prior to commissioning. A follow up leak test shall be carried out prior to leaving the site.

⚠ IMPORTANT

Pipe work, including piping material, pipe routing, and installation shall include protection from physical damage in operation and service, and be in compliance with national and local codes and standards, such as ASHRAE 15, ASHRAE 15.2, UL 207, IAPMO Uniform Mechanical Code, ICC International Mechanical Code, or CSA B52. All field joints shall be accessible for inspection prior to being covered or enclosed.

⚠ WARNING

Ducts connected to an appliance shall not contain a potential ignition source

⚠ IMPORTANT

Ensure that the area is in the open or that it is adequately ventilated before breaking into the system or conducting any hot work. A degree of ventilation shall continue during the period that the work is carried out.

⚠ IMPORTANT

When removing refrigerant from a system, either for servicing or decommissioning, it is recommended good practice that all refrigerants are removed safely.

When transferring refrigerant into cylinders, ensure that only appropriate refrigerant recovery cylinders are employed. Ensure that the correct number of cylinders for holding the total system charge is available. All cylinders to be used are designated for the recovered refrigerant and labelled for that refrigerant (i. e. special cylinders for the recovery of refrigerant). Cylinders shall be complete with pressure-relief valve and associated shut-off valves in good working order. Empty recovery cylinders are evacuated and, if possible, cooled before recovery occurs.

The recovery equipment shall be in good working order with a set of instructions concerning the equipment that is at hand and shall be suitable for the recovery of all appropriate refrigerants including, when applicable, flammable refrigerants. In addition, a set of calibrated weighing scales shall be available and in good working order. Hoses shall be complete with leak-free disconnect couplings and in good condition. Before using the recovery machine, check that it is in satisfactory working order, has been properly maintained and that any associated electrical components are sealed to prevent ignition in the event of a refrigerant release. Consult manufacturer if in doubt.

The recovered refrigerant shall be returned to the refrigerant supplier in the correct recovery cylinder, and the relevant waste transfer note arranged. Do not mix refrigerants in recovery units and especially not in cylinders.

If compressors or compressor oils are to be removed, ensure that they have been evacuated to an acceptable level to make certain that flammable refrigerant does not remain within the lubricant. The evacuation process shall be carried out prior to returning the compressor to the suppliers. Only electric heating to the compressor body shall be employed to accelerate this process. When oil is drained from a system, it shall be carried out safely.

⚠ IMPORTANT

When breaking into the refrigerant circuit to make repairs – or for any other purpose – conventional procedures shall be used. However, for flammable refrigerants it is important that best practice be followed and, since flammability is a consideration, procedures such as safely remove refrigerant following local and national regulations, purging the circuit with inert gas, evacuating (optional for A2L), purging with inert gas (optional for A2L), or opening the circuit by cutting or brazing be adhered to. The refrigerant charge shall be recovered into the correct recovery cylinders if venting is not allowed by local and national codes. For appliances containing flammable refrigerants, the system shall be purged with oxygen-free nitrogen to render the appliance safe for flammable refrigerants.

This process might need to be repeated several times. Compressed air or oxygen shall not be used for purging refrigerant systems. For appliances containing flammable refrigerants, refrigerants purging shall be achieved by breaking the vacuum in the system with oxygen-free nitrogen and continuing to fill until the working pressure is achieved, then venting to atmosphere, and finally pulling down to a vacuum (optional for A2L). This process shall be repeated until no refrigerant is within the system (optional for A2L). When the final oxygen-free nitrogen charge is used, the system shall be vented down to atmospheric pressure to enable work to take place. Ensure that the outlet for the vacuum pump is not close to any potential ignition sources and that ventilation is available.

⚠ IMPORTANT

Verify cabling will not be subject to wear, corrosion, excessive pressure, vibration, sharp edges or any other adverse environmental effects.

⚠ WARNING

PARTIAL UNITS shall only be connected to an appliance suitable for the same refrigerant.

NOTICE!

Charging information is given on the charging procedure sticker on the unit access panel. For more in-depth information, consult the Installation and Service Procedures manual, available on LennoxPros.com or through the Technical Support department at 800-453-6669.

DETAIL A

INSTALL UNIT AWAY FROM WINDOWS

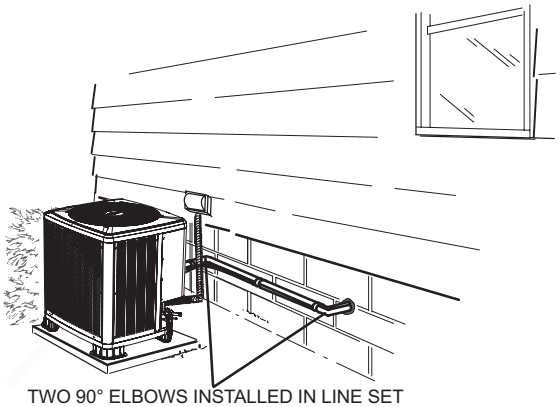

TWO 90° ELBOWS INSTALLED IN LINE SET WILL REDUCE LINE SET VIBRATION.

Outside Unit Placement

DETAIL B

INSTALL UNIT LEVEL OR, IF ON A SLOPE, MAINTAIN SLOPE TOLERANCE OF 2 DEGREES (OR 2 INCHES PER 5 FEET [50 MM PER 1.5 M]) AWAY FROM BUILDING STRUCTURE.

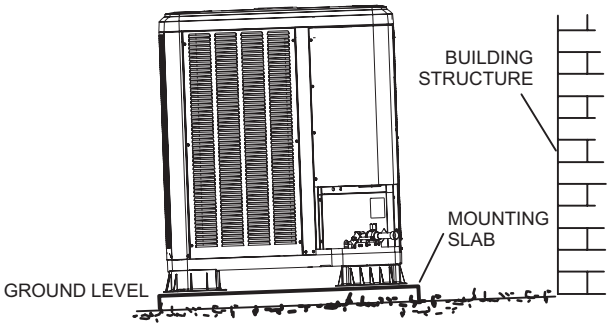

Slab Mounting at Ground Level

DETAIL C

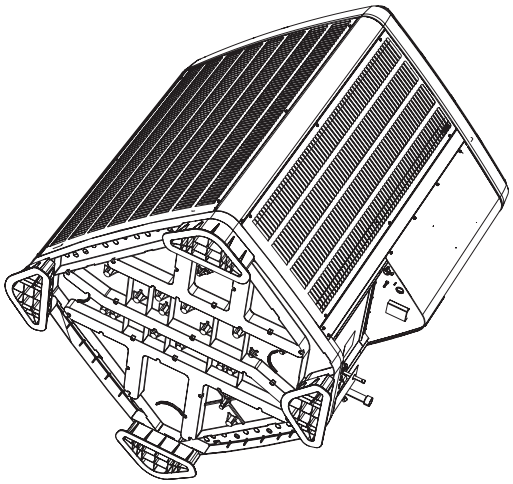

Underside of Unit Showing Optional Corner Post Raisers

DETAIL D

Slab Side Mounting

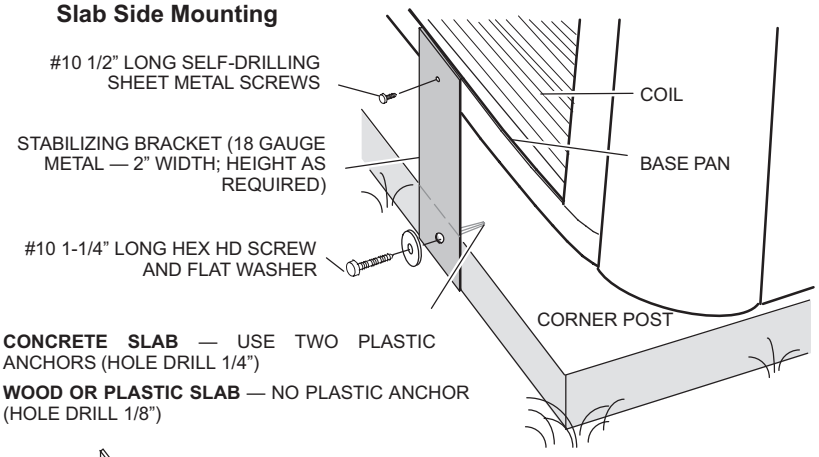

CONCRETE SLAB — USE TWO PLASTIC ANCHORS (HOLE DRILL 1/4")

WOOD OR PLASTIC SLAB — NO PLASTIC ANCHOR (HOLE DRILL 1/8")

Deck Top Mounting

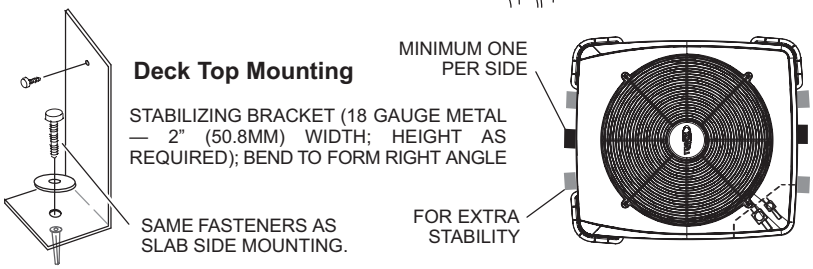

ONE BRACKET PER SIDE (MIN.); FOR EXTRA STABILITY, TWO BRACKETS PER SIDE, 2" (50.8MM) FROM EACH CORNER.

Stabilizing Unit on Uneven Surfaces

IMPORTANT — To help stabilize an outdoor unit, some installations may require strapping the unit to the pad using brackets and anchors commonly available in the marketplace.

UNIT DIMENSIONS – INCHES (MM)

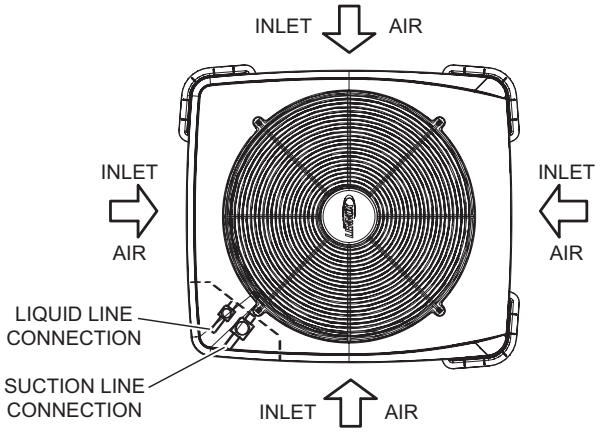

TOP VIEW

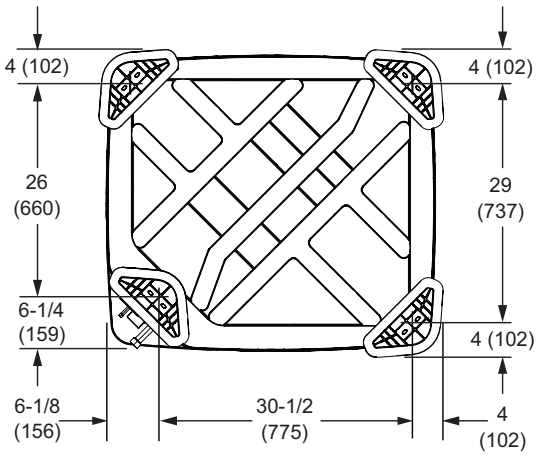

BOTTOM VIEW BASE SECTION
(With Optional Standoff Kit)

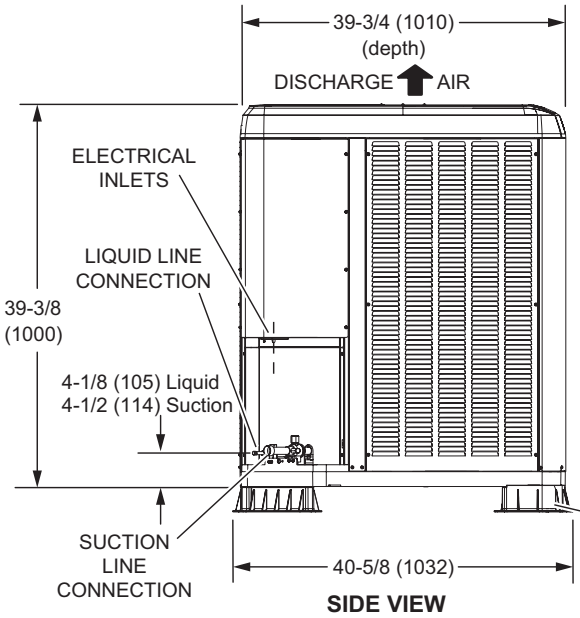

SIDE VIEW

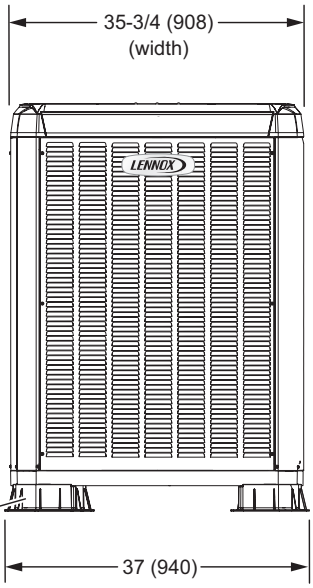

FRONT VIEW

[1] STAND-OFF
GUARD-EDGE
RAISER KIT (4)
(Field Installed)

[1] Adds 3 in. (76 mm) or
6 in. (152 mm) to unit height

SETTING THE UNIT (Continued) – Unit Placement

NOTICE!

Roof Damage!

This system contains both refrigerant and oil. Some rubber roofing material may absorb oil, causing the rubber to degrade. Failure to follow this notice could result in damage to roof surface.

⚠ IMPORTANT

This unit must be matched with an indoor coil as specified with AHRI. For AHRI Certified system match-ups and expanded ratings, visit www.LennoxPros.com

⚠ WARNING

To prevent personal injury, as well as damage to panels, unit or structure, observe the following:

While installing or servicing this unit, carefully stow all removed panels so that the panels will not cause injury to personnel, objects or nearby structures. Also, take care to store panels where they will not be subject to damage (e.g., being bent or scratched).

While handling or stowing the panels, consider any weather conditions (especially wind) that may cause panels to be blown around and damaged.

⚠ IMPORTANT

Exhaust vents from dryers, water heaters and furnaces should be directed away from the outdoor unit. Prolonged exposure to exhaust gases and the chemicals contained within them may cause condensation to form on the steel cabinet and other metal components of the outdoor unit. This will diminish unit performance and longevity

REFRIGERANT PIPING

⚠ IMPORTANT

If this unit is being matched with an approved line set it must be flushed prior to installation. Take care to empty all existing traps. Polyvinyl ether (PVE) oils are used in Lennox units charged with R454B refrigerant. Residual mineral oil can act as an insulator, preventing proper heat transfer. It can also clog the expansion device and reduce system performance and capacity. Failure to properly flush the system per this instruction and the detailed Installation and Service Procedures manual will void the warranty.

⚠ IMPORTANT

Braze-free fittings must conform with UL207 or ISO14903 (latest edition).

Flush the existing line set per the following instructions. For more information, refer to the Installation and Service Procedures manual available on LennoxPros.com. CAUTION - DO NOT attempt to flush and re-use existing line sets or indoor coil when the system contains contaminants (i.e., compressor burn out).

Polyvinyl ether (PVE) oil is used in the compressor.

If a new line set is being installed, size the piping per table 1.

***NOTE** - When installing refrigerant lines longer than 50 feet, refer to the Refrigerant Piping Design and Fabrication Guidelines manual available on LennoxPros.com (Corp. 9351-L9), or contact the Technical Support Department Product Application group for assistance.*

⚠ IMPORTANT

The Clean Air Act of 1990 bans the intentional venting of refrigerant (CFCs, HCFCs and HFCs) as of July 1, 1992. Approved methods of recovery, recycling or reclaiming must be followed. Fines and/or incarceration may be levied for noncompliance.

⚠ WARNING

When using a high pressure gas such as nitrogen to pressurize a refrigeration or air conditioning system, use a regulator that can control the pressure down to 1 or 2 psig (6.9 to 13.8 kPa).

⚠ WARNING

Refrigerant can be harmful if it is inhaled. Refrigerant must be used and recovered responsibly.

Failure to follow this warning may result in personal injury or death.

⚠ WARNING

Fire, Explosion and Personal Safety hazard. Failure to follow this warning could result in damage, personal injury or death.

Never use oxygen to pressurize or purge refrigeration lines. Oxygen, when exposed to a spark or open flame, can cause fire and/or an explosion, that could result in property damage, personal injury or death.

⚠ WARNING

Polyvinyl ether (PVE) oils used with R454B refrigerant absorb moisture very quickly. It is very important that the refrigerant system be kept closed as much as possible. DO NOT remove line set caps or service valve stub caps until you are ready to make connections.

The EL22KCV is a variable-capacity cooling system utilizing variable speed compressor technology. With the variable speed compressor and variable pumping capacity, additional consideration must be given to refrigerant piping sizing and application. The guidelines below are to be used exclusively for the EL22KCV systems.

COOLING SYSTEM (R454B)

- Total equivalent length equals 180 feet (piping and all fittings included).

***NOTE** – Length is general guide. Lengths may be more or less, depending on remaining system design factors.*

- Maximum linear (actual) length = 150 feet.
- Maximum linear liquid lift = 60 feet.

***NOTE** – Maximum lifts are dependent on total length, number of elbows, etc. that contribute to total pressure drop.*

- Maximum length vapor riser = 60 feet.
- **Up to 50 Linear Feet:** Use rated line sizes listed in table 1.
- **Between 51 and 150 Linear Feet:** Crankcase heater and nonbleed port TXV factory installed. No additional components required. Vertical vapor riser must be sized to the vapor riser listed in the table 2 on systems with line sets longer than 51 feet. Use tables 2 and 3 to determine the correct liquid and vapor line sizes.
- **Over 150 Linear Feet:** not recommended.
- Additional oil is not required for systems with line lengths up to 150 feet.

SUCTION TRAPS

For systems with the outdoor unit 5 - 60 feet above the indoor unit, one trap must be installed at the bottom of the suction riser.

ADDING REFRIGERANT FOR LONG LINE SETS

WEIGH IN

CHARGING METHOD FOR LONG LINE SETS

64ºF (17.7ºC) and Below

Amount specified on nameplate _____ + Adjust amount. for variation in line set length and liquid line diameter using table below. _____ = Total charge _____

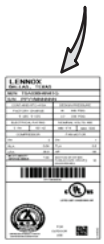

Liquid Line Set Diameter	R454B (ounces per foot)
5/16”	0.40
3/8”	0.60
1/2”	1.00

NOTE — Insulate liquid line when it is routed through areas where the surrounding ambient temperature could become higher than the temperature of the liquid line or when pressure drop is equal to or greater than 20 psig.

NOTE — The above nameplate is for illustration purposes only. Go to actual nameplate on outdoor unit for charge information.

Charging Formula for Liquid Line Charge Adjustments

[(Line set oz./ft. x total length) - (factory charge for line set)] = charge adjustment

Example: Units are factory-charged for 15 feet (4.6 meters) of 3/8" line set. Factory charge for 3/8" is 0.60 oz/ft x 15 = 9.0 ounces.

FIGURE 1. Using Weigh In Method

Line Set Joints – Furnace Application

Evaporator primary line set joints in all applications shall have a line set joint sleeve.

Evaporator primary line sets should not have additional joints not covered by line set joint sleeve.

If additional joints are present, the system installation shall comply with one of the options below:

Option 1 - Furnace is installed as a direct vent appliance;

Option 2 - Furnace/Evaporator installation is in a space greater than the minimum conditioned area (Amin);

Option 3 - Furnace/Evaporator installation is connected to a space greater than the minimum conditioned area (Amin) through an opening of at least 15 in² (4-inch diameter hole equivalent) located below the level of the furnace burners;

Option 4 - Have a second refrigerant detection sensor installed below the level of the burners (see Secondary Sensor Installation section).

Multiple Systems Installed in Same Space

For any A2L refrigerant system with additional joints not covered by line set joint sleeves, each system in the same space must have refrigerant detection sensor installed below the level of the burners (see Secondary Sensor Installation section). If all the systems in the same space are installed with direct vent application, then additional refrigerant detection sensor is not needed

Secondary Sensor Installation

If secondary refrigerant sensor is required, it shall be mounted as follows:

Upflow Applications: Mounted on an unused side furnace return air connection at least 9 inches above the floor and within 9 inches from front of furnace.

Downflow Applications: Mounted on one side of the evaporator coil 9 inches above the floor and within 9 inches from front of coil.

Horizontal Applications: Mounted on the bottom side return furnace air connection within 9 inches of both the blower deck and front of furnace.

Connect the refrigerant sensor to the second sensor input on the RDS Control. Refer to the instructions provided with the sensor or the RDS controller to enable the second sensor.

TABLE 1. Standard Refrigerant Line Set – Up to 50 Linear Feet

Inches (mm)					
	Valve Size Connections		Recommended Line Sets		
EL22KCV*	Liquid Line	Suction Line	L15 Line Set Model	Line Set Length	Catalog Number
-024	3/8” (10 mm)	3/4” (19 mm)	L15-41-20	20 feet (6.1 m)	89J56
-036 -048	3/8” (10 mm)	7/8” (22 mm)	L15-65-30	30 feet (12.2 m)	89J57
			L15-65-40	40 feet (15.2 m)	89J58
			L15-65-50	50 feet (15.2 m)	89J59
-060	3/8” (10 mm)	1-1/8” (29 mm) **	Field-fabricated		

* Applicable to all minor revision numbers unless otherwise specified.
** Some applications may require a field-provided 1-1/8” to 7/8” adapter.

TABLE 2. EL22KCV Line Set Guidelines – Between 51 - 150 Feet Linear Length

Model	Maximum Total Equivalent Length (ft)	Maximum Linear (actual) Length (ft)	Maximum Suction Riser (ft)	Maximum Linear Liquid Lift (ft)	Preferred Suction Line Sizes for Horizontal Runs	Required Suction Riser Size
-024	180	150	60	60	7/8”	5/8”
-036	180	150	60	60	7/8”	3/4”
-048	180	150	60	60	7/8”	7/8”
-060	180	150	60	60	7/8”	7/8”

TABLE 3. Liquid Line Diameter Selection Table

Unit	Line Size	Total Linear Length (feet)						
		25	50	75	100	125	150	
-024	5/16”	25	50	55	48	40	33	Max. Elevation (ft)
	3/8”	25	50	60	60	60	60	
-036	3/8”	25	50	60	56	51	45	
	1/2”	25	50	60	60	60	60	
-048	3/8”	25	50	50	41	31	22	
	1/2”	25	50	60	60	60	60	
-060	3/8”	25	50	36	22	8	NR	
	1/2”	25	50	60	60	60	59	

NOTE - *Shaded rows indicate rated liquid line size*

A. Find your unit on the left side of the table.
B. Start with the rated liquid line size (shaded row) on the outdoor unit
C. Select the actual Total Linear Length of your system shown at the top of the table.
D. The elevation listed in the table is the maximum allowed for the liquid line listed.
E. Select or consider the larger liquid line size shown in the table if the elevation does not meet your requirements.

NOTE - *For new or replacement line set installation, refer to Service and Application Note - Corp. 9112-L4 (C-91-4).*

⚠ CAUTION

Brazing alloys and flux contain materials which are hazardous to your health.

Avoid breathing vapors or fumes from brazing operations. Perform operations only in well-ventilated areas.

Wear gloves and protective goggles or face shield to protect against burns.

Wash hands with soap and water after handling brazing alloys and flux.

⚠ WARNING

Danger of fire. Bleeding the refrigerant charge from only the high side may result in pressurization of the low side shell and suction tubing. Application of a brazing torch to a pressurized system may result in ignition of the refrigerant and oil mixture. Check the high and low pressures before applying heat.

1A TYPICAL EXISTING FIXED ORIFICE REMOVAL PROCEDURE (UNCASED COIL SHOWN)

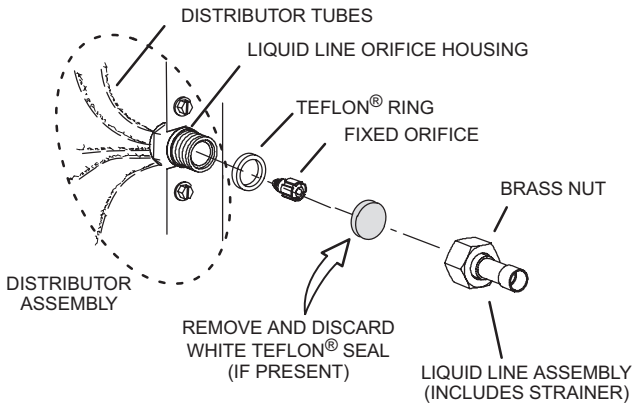

A - On fully cased coils, remove the coil access and plumbing panels.

B - Remove any shipping clamps from the liquid line and distributor assembly.

C - Using two wrenches, disconnect liquid line from liquid line orifice housing. Take care not to twist or damage distributor tubes during this process.

D - Remove and discard fixed orifice, valve stem assembly (if present) and Teflon® washer as illustrated above.

E - Use a field-provided fitting to temporarily reconnect the liquid line to the indoor unit's liquid line orifice housing.

OR

1B TYPICAL EXISTING EXPANSION VALVE REMOVAL PROCEDURE (UNCASED COIL SHOWN)

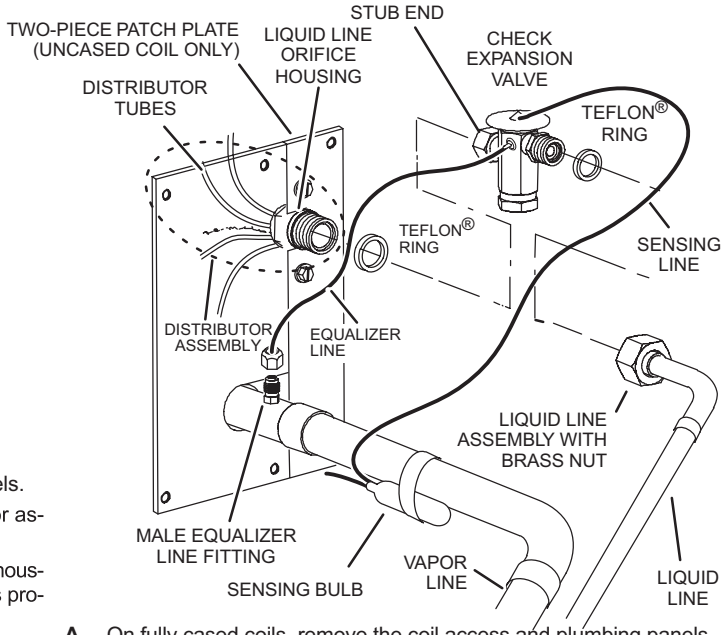

A - On fully cased coils, remove the coil access and plumbing panels.

B - Remove any shipping clamps from the liquid line and distributor assembly.

C - Disconnect the equalizer line from the check expansion valve equalizer line fitting on the vapor line.

D - Remove the vapor line sensing bulb.

E - Disconnect the liquid line from the check expansion valve at the liquid line assembly.

F - Disconnect the check expansion valve from the liquid line orifice housing. Take care not to twist or damage distributor tubes during this process.

G - Remove and discard check expansion valve and the two Teflon® rings.

H - Use a field-provided fitting to temporarily reconnect the liquid line to the indoor unit's liquid line orifice housing.

2 CONNECT GAUGES AND EQUIPMENT FOR FLUSHING PROCEDURE

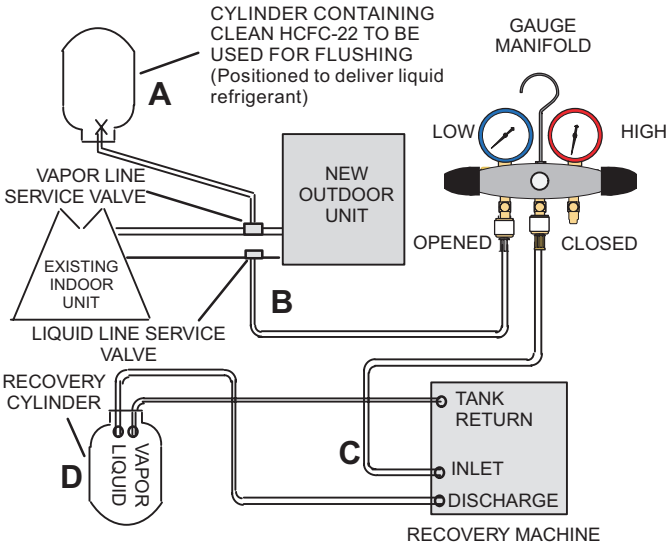

A - HCFC-22 cylinder with clean refrigerant (positioned to deliver liquid refrigerant) to the vapor service valve.

B - HCFC-22 gauge set (low side) to the liquid line valve.

C - HCFC-22 gauge set center port to inlet on the recovery machine with an empty recovery tank connected to the gauge set.

D - Connect recovery tank to recovery machine per machine instructions.

3 FLUSHING LINE SET

The line set and indoor unit coil must be flushed with at least the same amount of clean refrigerant that previously charged the system. Check the charge in the flushing cylinder before proceeding.

A - Set the recovery machine for liquid recovery and start the recovery machine. Open the gauge set valves to allow the recovery machine to pull a vacuum on the existing system line set and indoor unit coil.

B - Position the cylinder of clean HCFC-22 for delivery of liquid refrigerant and open its valve to allow liquid refrigerant to flow into the system through the vapor line valve. Allow the refrigerant to pass from the cylinder and through the line set and the indoor unit coil before it enters the recovery machine.

C - After all of the liquid refrigerant has been recovered, switch the recovery machine to vapor recovery so that all of the HCFC-22 vapor is recovered. Allow the recovery machine to pull the system down to 0.

D - Close the valve on the inverted HCFC-22 drum and the gauge set valves. Pump the remaining refrigerant out of the recovery machine and turn the machine off.

FIGURE 2

1 PIPING PANEL REMOVAL / PREPARING LINE SET

Remove piping panel to access service valves. Cut ends of the refrigerant lines square (free from nicks or dents) and debur the ends. The pipe must remain round. Do not crimp end of the line.

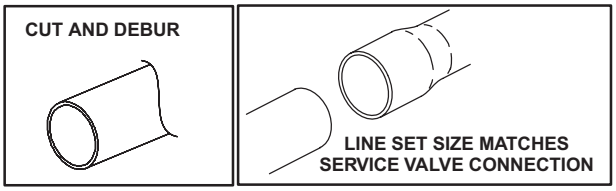

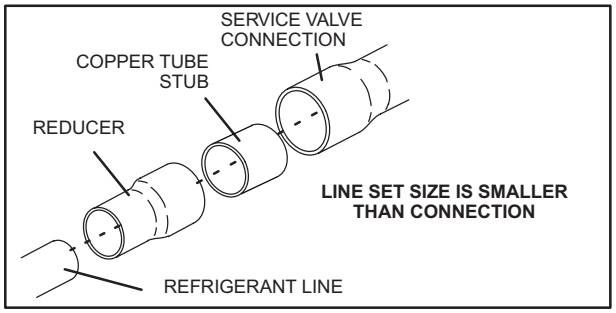

DO NOT CRIMP SERVICE VALVE CONNECTOR WHEN PIPE IS SMALLER THAN CONNECTION

2 CAP AND CORE REMOVAL

Remove service cap and core from both the suction / vapor and liquid line service ports.

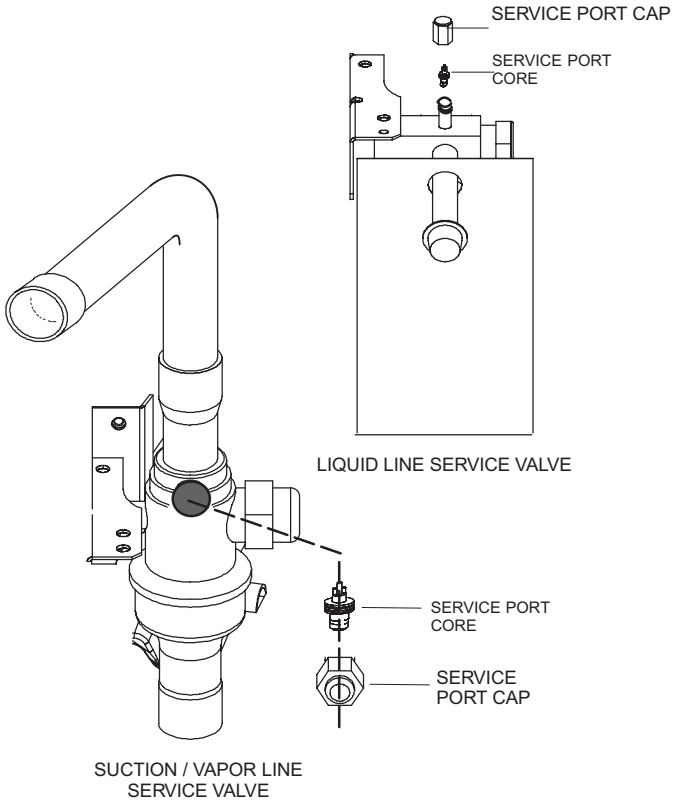

3 ATTACH THE MANIFOLD GAUGE SET FOR BRAZING LIQUID AND SUCTION / VAPOR LINE SERVICE VALVES

A. Connect gauge set low pressure side to liquid line service valve (service port).
B. Connect gauge set center port to bottle of nitrogen with regulator.
C. With valve core removed from the suction / vapor line service port, nitrogen flow will have an exit point.

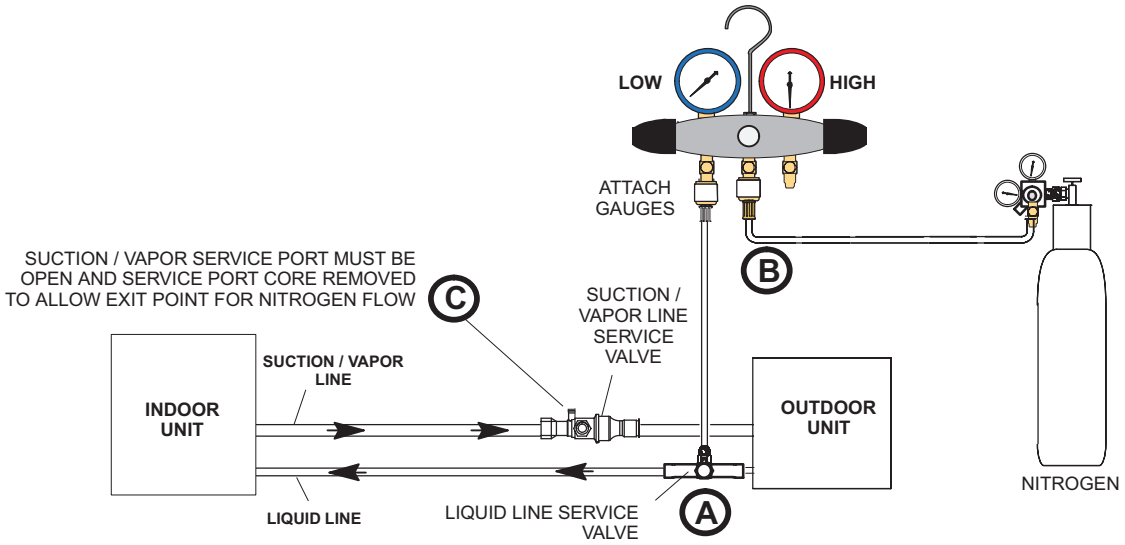

FIGURE 3

4 WRAP SERVICE VALVES

To help protect service valve seals during brazing, wrap water-saturated cloths around service valve bodies and copper tube stubs. Use additional water-saturated cloths under the valve body to protect the base paint.

5 FLOW NITROGEN

Flow regulated nitrogen (at 1 to 2 psig) through the refrigeration gauge set into the valve stem port connection on the liquid service valve and out of the suction / vapor valve stem port. See steps **3A, 3B** and **3C** on previous page and below for manifold gauge setup.

WARNING

FIRE, PERSONAL INJURY, OR PROPERTY DAMAGE may result if you do not wrap a water-saturated cloth around both liquid and suction line service valve bodies and copper tube stub while brazing the line set! The braze, when complete, must be quenched with water to absorb any residual heat.

Do not open service valves until refrigerant lines and indoor coil have been leak-tested and evacuated. Refer to Installation and Service Procedures manual found on DAVENET.

6 BRAZE LINE SET

Cloths must remain water-saturated throughout the brazing and cool-down process.

1. Braze liquid line to liquid line service valve.
2. Braze suction / vapor line to suction / vapor service valve.

IMPORTANT !

Use silver alloy brazing rods with 5% minimum silver alloy for copper-to-copper brazing and 45% alloy for copper-to-brass or copper-to-steel brazing.

IMPORTANT !

Allow braze joint to cool. Apply additional water-saturated cloths to help cool brazed joints. Do not remove water-saturated cloths until piping has cooled. Temperatures above 250ºF will damage valve seals.

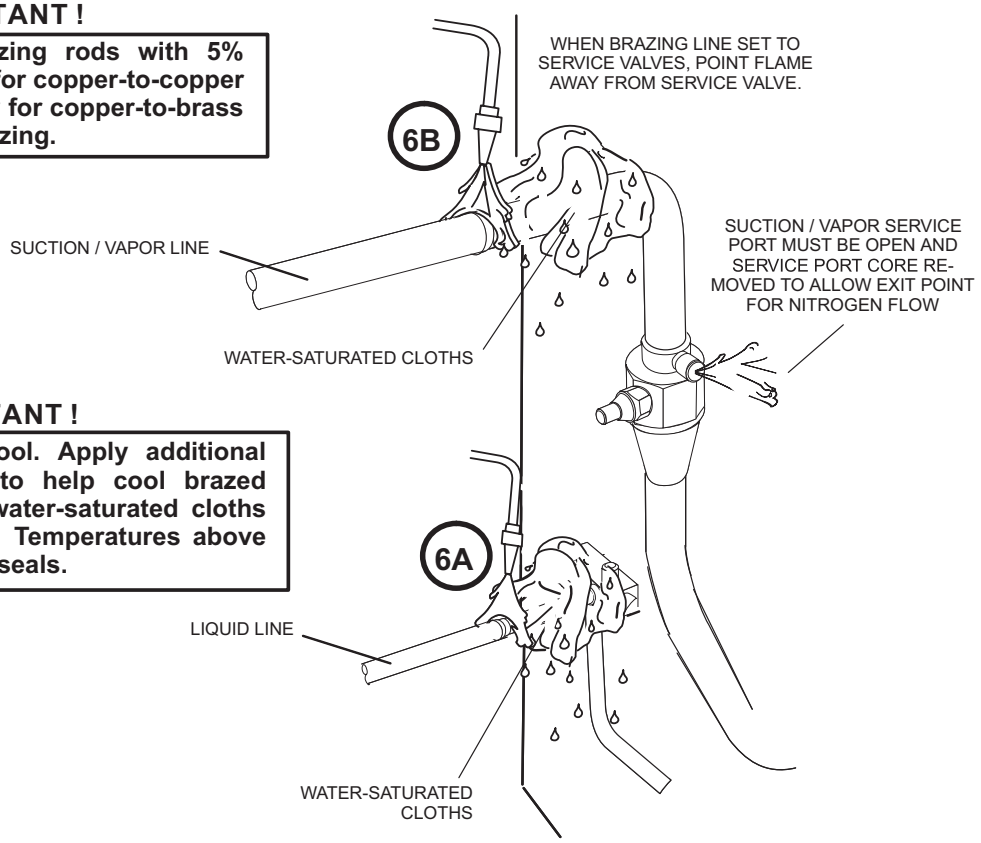

7 PREPARATION FOR NEXT STEP

After all connections have been brazed, disconnect manifold gauge set from service ports. Apply additional water-saturated cloths to both services valves to cool piping. Once piping is cool, remove all water-saturated cloths.

FIGURE 4

REFRIGERANT PIPING – Install Indoor Expansion Valve

This outdoor unit is designed for use in systems that include an expansion valve metering device (purchased separately) at the indoor coil. See the EL22KCV Product Specifications bulletin (EHB) for approved expansion valve kit match-ups and application information. The expansion valve unit must be installed inside the cabinet. In applications where an uncased coil is being installed in a field-provided plenum, install the expansion valve in a manner that will provide access for future field service of the expansion valve. Refer to below illustration for reference during installation of expansion valve unit.

INDOOR EXPANSION VALVE INSTALLATION

(Uncased Coil Shown)

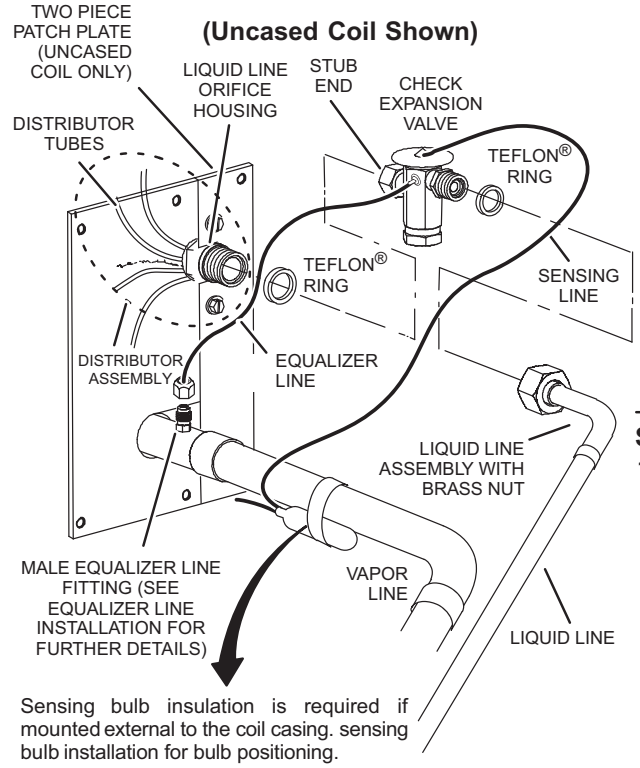

Sensing bulb insulation is required if mounted external to the coil casing. sensing bulb installation for bulb positioning.

EQUALIZER LINE INSTALLATION

1 - Remove and discard either the flare seal cap or flare nut with copper flare seal bonnet from the equalizer line port on the vapor line as illustrated in the figure below.

2 - Remove the field-provided fitting that temporarily reconnected the liquid line to the indoor unit's distributor assembly.

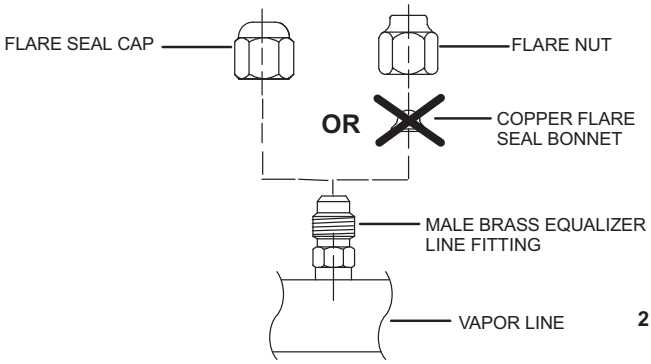

3 - Install one of the provided Teflon® rings around the stubbed end of the check expansion valve and lightly lubricate the connector threads and expose surface of the Teflon® ring with refrigerant oil.

4 - Attach the stubbed end of the check expansion valve to the liquid line orifice housing. Finger tighten and use an appropriately sized wrench to turn an additional 1/2 turn clockwise as illustrated in the figure above, or tighten to 20 ft-lb.

5 - Place the remaining Teflon® washer around the other end of the check expansion valve. Lightly lubricate connector threads and expose surface of the Teflon® ring with refrigerant oil.

6 - Attach the liquid line assembly to the check expansion valve. Finger tighten and use an appropriately sized wrench to turn an additional 1/2 turn clockwise as illustrated in the figure above or tighten to 20 ft-lb.

1/2 Turn

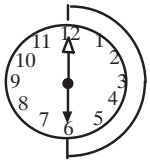

SENSING BULB INSTALLATION

1 - Attach the vapor line sensing bulb in the proper orientation as illustrated below using the clamp and screws provided.

ON LINES SMALLER THAN 3/4", MOUNT SENSING BULB AT EITHER THE 1 OR 11 O'CLOCK POSITION.

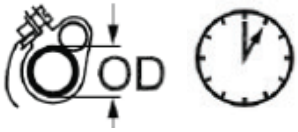

ON 3/4" AND LARGER LINES, MOUNT SENSING BULB AT EITHER THE 3 OR 9 O'CLOCK POSITION.

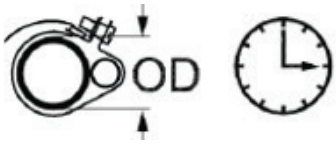

***NOTE -** NEVER MOUNT THE SENSING BULB ON BOTTOM OF LINE.*

***NOTE** - Though it is preferred to have the sensing bulb installed on a horizontal run of the vapor line, installation on a vertical run of piping is acceptable if necessary. See figure to right for proper bulb orientation on vertical run of piping.*

***NOTE** - Confirm proper thermal contact between vapor line and check/expansion bulb before insulating the sensing bulb once installed.*

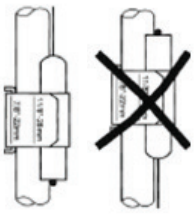

2 - Connect the equalizer line from the check expansion valve to the equalizer vapor port on the vapor line. Finger tighten the flare nut plus 1/8 turn (7 ft-lbs) as illustrated to the right.

1/8 Turn

FIGURE 5

LEAK TEST AND EVACUATION

LEAK TEST

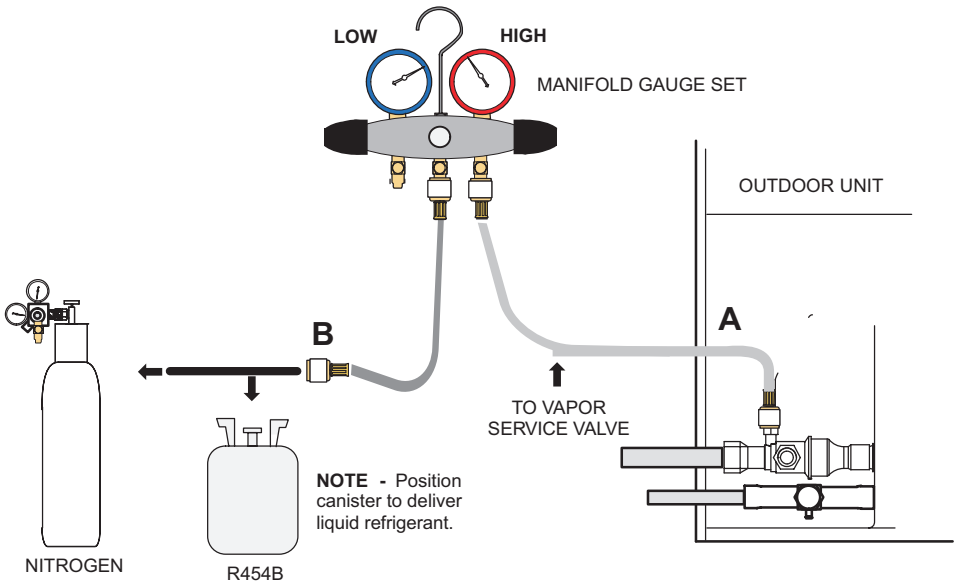

1 CONNECT GAUGE SET

A - Connect the high pressure hose of an R454B manifold gauge set to the vapor valve service port.

NOTE *- Normally, the high pressure hose is connected to the liquid line port. However, connecting it to the vapor port better protects the manifold gauge set from high pressure damage.*

B - With both manifold valves closed, connect the cylinder of R454B refrigerant to the center port of the manifold gauge set.

NOTE *- Later in the procedure, the R454B container will be replaced by the nitrogen container.*

2 TEST FOR LEAKS

After the line set has been connected to the indoor and outdoor units, check the line set connections and indoor unit for leaks. Use the following procedure to test for leaks:

A - With both manifold valves closed, connect the cylinder of R454B refrigerant to the center port of the manifold gauge set. Open the valve on the R454B cylinder (vapor only).

B - Open the high pressure side of the manifold to allow R454B into the line set and indoor unit. Weigh in a trace amount of R454B. *[A trace amount is a maximum of two ounces (57 g) refrigerant or three pounds (31 kPa) pressure.]* Close the valve on the R454B cylinder and the valve on the high pressure side of the manifold gauge set. Disconnect the R454B cylinder.

C - Connect a cylinder of nitrogen with a pressure regulating valve to the center port of the manifold gauge set.

D - Adjust nitrogen pressure to 160 psig (1103 kPa). Open the valve on the high side of the manifold gauge set in order to pressurize the line set and the indoor unit.

E - After a few minutes, open one of the service valve ports and verify that the refrigerant added to the system earlier is measurable with a leak detector. Once leak detector is confirmed operational, leak check the entire system (field joints and line set included) to a sensitivity of 5 grams per year of refrigerant.

F - After leak testing, disconnect gauges from service ports.

FIGURE 6

EVACUATION

3 CONNECT GAUGE SET

***NOTE** - Remove cores from service valves (if not already done).*

A - Connect low side of manifold gauge set with 1/4 SAE in-line tee to *vapor* line service valve

B - Connect high side of manifold gauge set to *liquid* line service valve

C - Connect available micron gauge connector on the 1/4 SAE in-line tee.

D - Connect the vacuum pump (with vacuum gauge) to the center port of the manifold gauge set. The center port line will be used later for both the R454B and nitrogen containers.

***NOTE -** Position canister to deliver liquid refrigerant.*

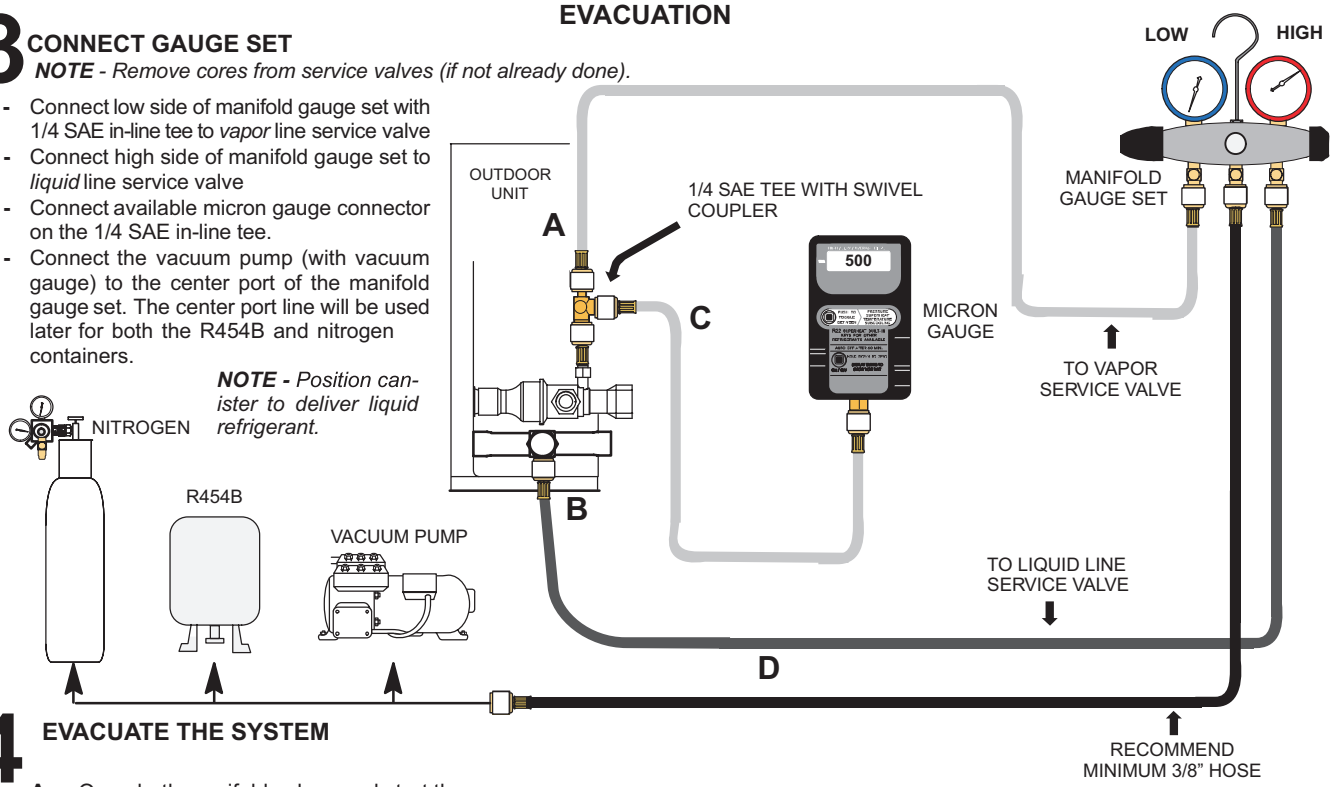

4 EVACUATE THE SYSTEM

A - Open both manifold valves and start the vacuum pump.

B - Evacuate the line set and indoor unit to an **absolute pressure** of 23,000 microns (29.01 inches of mercury).

***NOTE** - During the early stages of evacuation, it is desirable to close the manifold gauge valve at least once. A rapid rise in pressure indicates a relatively large leak. If this occurs, **repeat the leak testing procedure**.*

***NOTE** - The term **absolute pressure** means the total actual pressure above absolute zero within a given volume or system. Absolute pressure in a vacuum is equal to atmospheric pressure minus vacuum pressure.*

C - When the absolute pressure reaches 23,000 microns (29.01 inches of mercury), perform the following:

- Close manifold gauge valves.
- Close valve on vacuum pump.
- Turn off vacuum pump.
- Disconnect manifold gauge center port hose from vacuum pump.
- Attach manifold center port hose to a nitrogen cylinder with pressure regulator set to 160 psig (1103 kPa) and purge the hose.
- Open manifold gauge valves to break the vacuum in the line set and indoor unit.
- Close manifold gauge valves.

WARNING !

Possible equipment damage.

Avoid deep vacuum operation. Do not use compressors to evacuate a system. Extremely low vacuum can cause internal arcing and compressor failure. Damage caused by deep vacuum operation will void warranty.

D - Shut off the nitrogen cylinder and remove the manifold gauge hose from the cylinder. Open the manifold gauge valves to release the nitrogen from the line set and indoor unit.

E - Reconnect the manifold gauge to the vacuum pump, turn the pump on, and continue to evacuate the line set and indoor unit until the absolute pressure does not rise above 500 microns (29.9 inches of mercury) within a 20-minute period after shutting off the vacuum pump and closing the manifold gauge valves.

F - When the absolute pressure requirement above has been met, disconnect the manifold hose from the vacuum pump and connect it to a cylinder of R454B positioned to deliver liquid refrigerant. Open the manifold gauge valve 1 to 2 psig in order to release the vacuum in the line set and indoor unit.

G - Perform the following:

- Close manifold gauge valves.
- Shut off R454B cylinder.
- Reinstall service valve cores by removing manifold hose from service valve. Quickly install cores with core tool while maintaining a positive system pressure.
- Replace stem caps and finger tighten them, then tighten an additional one-sixth (1/6) of a turn as illustrated.

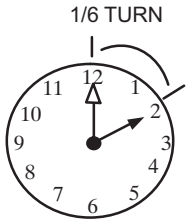

FIGURE 7

ELECTRICAL – Circuit Sizing and Wire Routing

In the U.S.A., wiring must conform with current local codes and the current National Electric Code (NEC). In Canada, wiring must conform with current local codes and the current Canadian Electrical Code (CEC).

Refer to the furnace or air handler installation instructions for additional wiring application diagrams and refer to unit nameplate for minimum circuit ampacity and maximum overcurrent protection size.

Refrigerant Detection System

Unit must be installed with Lennox-approved Refrigerant Detection System (RDS) and sensor.

Do not operate system until refrigerant detection system is verified to be in good working order.

24VAC TRANSFORMER

Use the transformer provided with the furnace or air handler for low-voltage control power (24VAC - 40 VA minimum).

Thermostat Control and Low Voltage Control Wiring

EL22KCV Thermostat Control Options

The EL22KCV variable capacity units provide two thermostat control options to provide application and installation flexibility.

S30 Communicating Thermostat Control

The EL22KCV variable capacity unit may be installed as a fully communicating system consisting of S30 Smart Communicating Thermostat, a communicating indoor unit and the EL22KCV variable capacity outdoor unit wired with (4) communication wires (R, I+, I- and C) connected to the EL22KCV Outdoor Unitary Control.

The EL22KCV variable capacity unit when wired as a fully communicating system will take full advantage of the advanced diagnostics and control, Wi-Fi accessibility and system operation parameters. Refer to the EL22KCV field wiring diagram for an S30 communicating thermostat.

Conventional 24VAC Non-Communicating Thermostat Control

The EL22KCV variable capacity unit may be installed using a conventional 24VAC non-communicating two-stage cooling or single-stage cooling thermostat.

***NOTE** – The conventional 24VAC non-communicating thermostat must have a compressor minimum on time of three minutes to prevent compressor short cycling. The Lennox M30, CS7500, CS3000 and many other commercially available electronic thermostats provide this feature.*

The EL22KCV unit will provide full variable capacity operation when installed with a conventional 24VAC non-communicating two-stage cooling or single-stage cooling thermostat. The EL22KCV outdoor control has advanced control algorithms using the EL22KCV suction pressure sensor to provide true variable capacity operation.

When utilizing a two-stage conventional 24VAC non-communicating thermostat, four wires are required to control the outdoor unit (R, C, Y1 and Y2). Refer to the EL22KCV field wiring diagram for a conventional 24VAC non-communicating 2-stage thermostat.

When utilizing a single conventional 24VAC non-communicating thermostat, three wires are required to control the outdoor unit (R, C, and Y1) and Y1 is jumpered to Y2 in the outdoor unit. Note that the published performance data is based upon the use of a two-stage thermostat. Refer to the EL22KCV field wiring diagram for a conventional 24VAC non-communicating single-stage thermostat.

⚠ WARNING

Electrical Hazard
High Voltage
Wait 5 Minutes
Electrical components may hold charge.
Do not remove this panel or service this area for 5 minutes after the power has been removed.

⚠ WARNING

Fire Hazard. Use of aluminum wire with this product may result in a fire, causing property damage, severe injury or death. Use copper wire only with this product.

⚠ WARNING

Failure to use properly sized wiring and circuit breaker may result in property damage. Size wiring and circuit breaker(s) per Product Specifications bulletin (EHB) and unit rating plate.

⚠ WARNING

ELECTROSTATIC DISCHARGE (ESD) Precautions and Procedures	Electrostatic discharge can affect electronic components. Take care during unit installation and service to protect the unit's electronic controls. Precautions will help to avoid control exposure to electrostatic discharge by putting the unit, the control and the technician at the same electrostatic potential. Touch hand and all tools on an unpainted unit surface before performing any service procedure to neutralize electrostatic charge.

SIZE CIRCUIT AND INSTALL SERVICE DISCONNECT SWITCH

Refer to the unit nameplate for minimum circuit ampacity, and maximum fuse or circuit breaker (HACR per NEC). Install power wiring and properly sized disconnect switch.

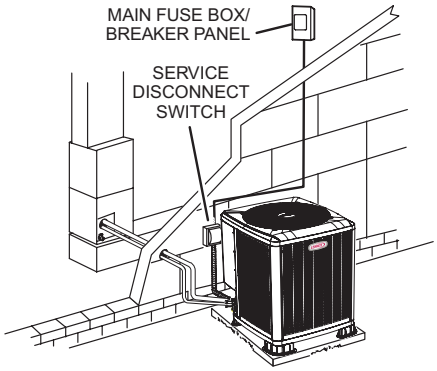

***NOTE** - Units are approved for use only with copper conductors. Ground unit at disconnect switch or connect to an earth ground.*

INSTALL THERMOSTAT

Install room thermostat (ordered separately) on an inside wall approximately in the center of the conditioned area and 5 feet (1.5m) from the floor. It should not be installed on an outside wall or where it can be affected by sunlight or drafts.

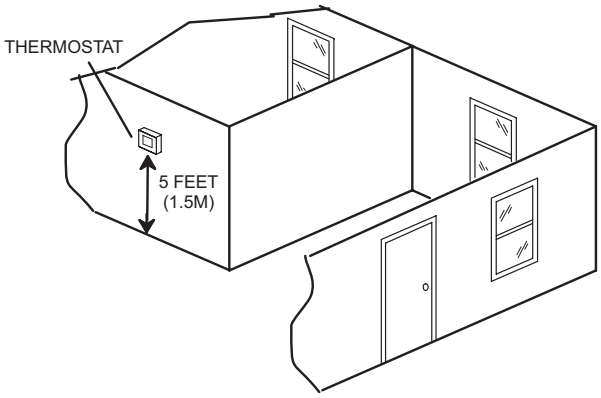

***NOTE** - 24VAC, Class II circuit connections are made in the control panel.*

FIGURE 8

EL22KCV Thermostat Control Options

Thermostat Type	Indoor Unit Type	Qty. of Wires to EL22KCV	EL22KCV Terminal Strip Connections	Unit Operation	Field Wiring Diagram
S40 Communicating Thermostat	Comunicating Gas Furnace or Air Handler	4	R, I+, I-, C	Fully Communicating Variable Capacity Operation Based Upon Thermostat Demand	Figure 10
Conventional 24VAC 2-Stage Cooling Thermostat (non-communicating)	Any Furnace or Air Handler (non-communicating or communicating)	4	R, C, Y1, Y2	Full Variable Capacity Operation Controlled by EL22KCV Unitary Control Using Suction Pressure	Figure 10
Conventional 24VAC Single-Stage Cooling Thermostat (non-communicating)	Any Furnace or Air Handler (non-communicating or communicating)	3	R, C, Y1 (Jumper Y1 to Y2)	Full Variable Capacity Operation Controlled by EL22KCV Unitary Control Using Suction Pressure	Figure 10

ELECTRICAL – Outdoor Control Jumpers and Terminals

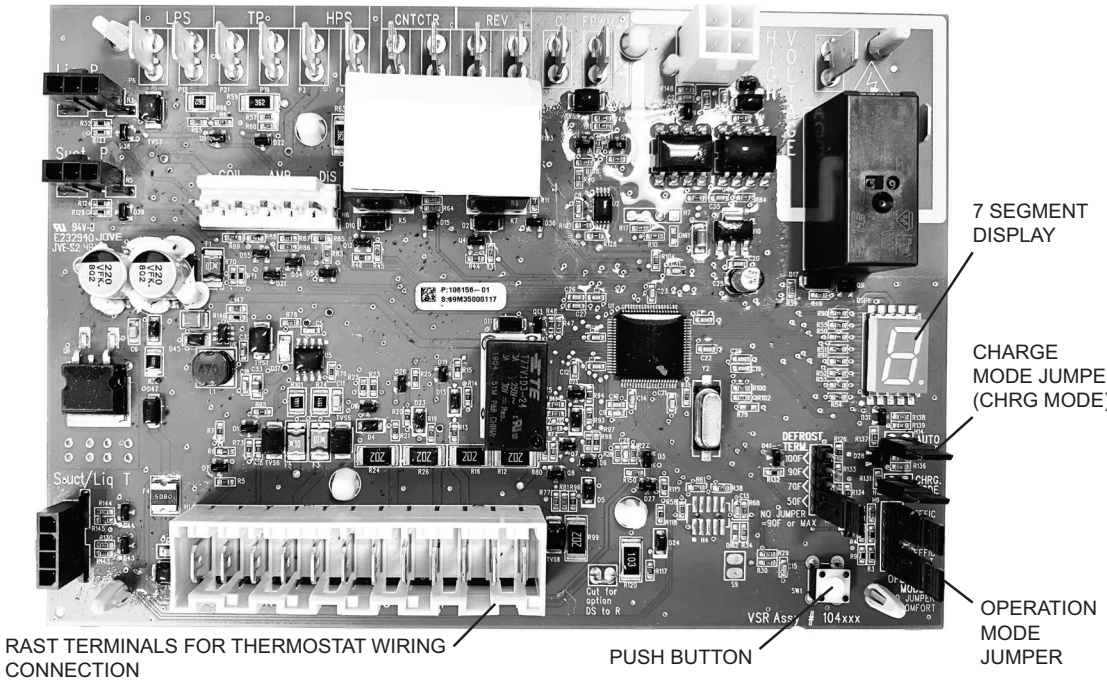

FIGURE 9

Outdoor Control 7 Segment Display and Push Button

Information concerning the outdoor control 7-segment display and push button operations are available on the unit access panel.

Alarms

Alarm information is provided on the unit access panel.

Charge Mode Jumper

To initiate the EL22KCV Charge Mode function, install the jumper across the two Charge Mode Pins (CHRG MODE) on the outdoor control. The Charge Mode can be used when charging the system with refrigerant, checking the refrigerant charge, pumping down the system and performing other service procedures that requires outdoor unit operation at 100% capacity.

EL22KCV Charge Mode Operation with a S40 Communicating Thermostat

Installing a jumper on the Charge Mode Pins will initiate compressor operation and outdoor fan motor at 100% capacity and will provide a signal to the indoor unit to initiate indoor blower operation at the maximum cooling air volume. To exit the charge mode, remove the Charge Mode Jumper. The Charge Mode has a maximum time of 60 minutes and will automatically exit the charge mode after 60 minutes is the charge mode jumper is left in place.

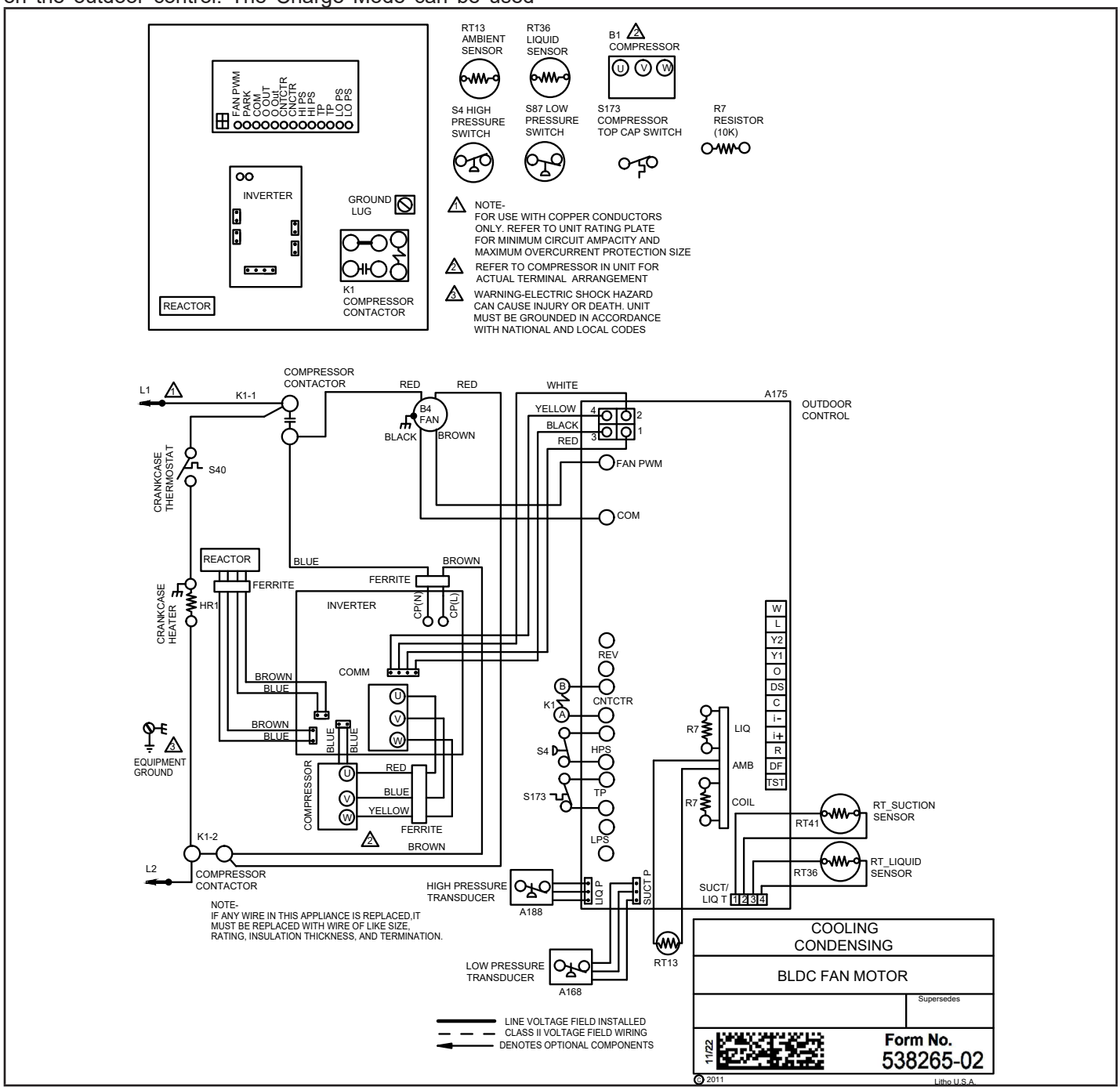

FIGURE 10. Typical Field Wiring

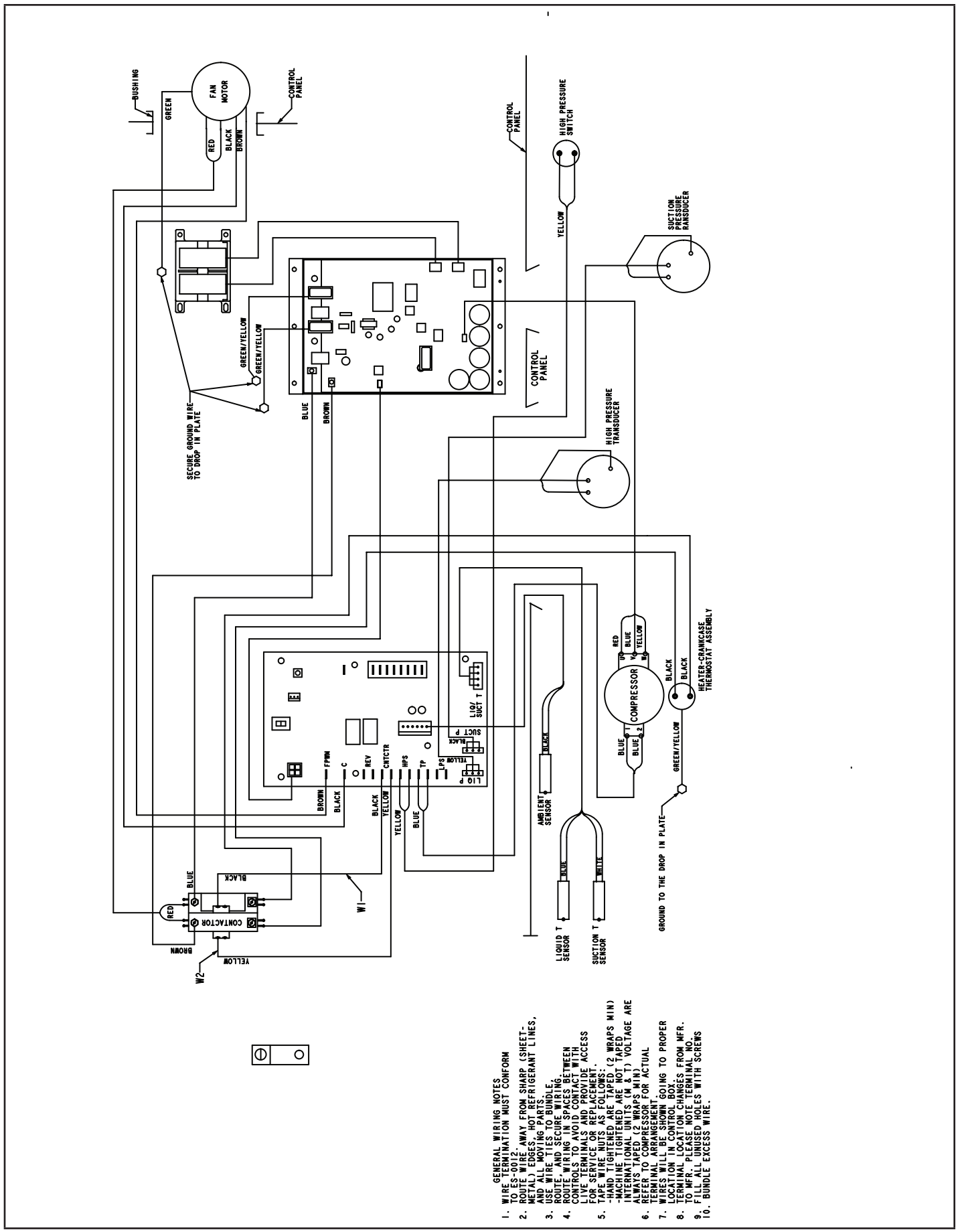

FIGURE 11. Typical Factory Wiring

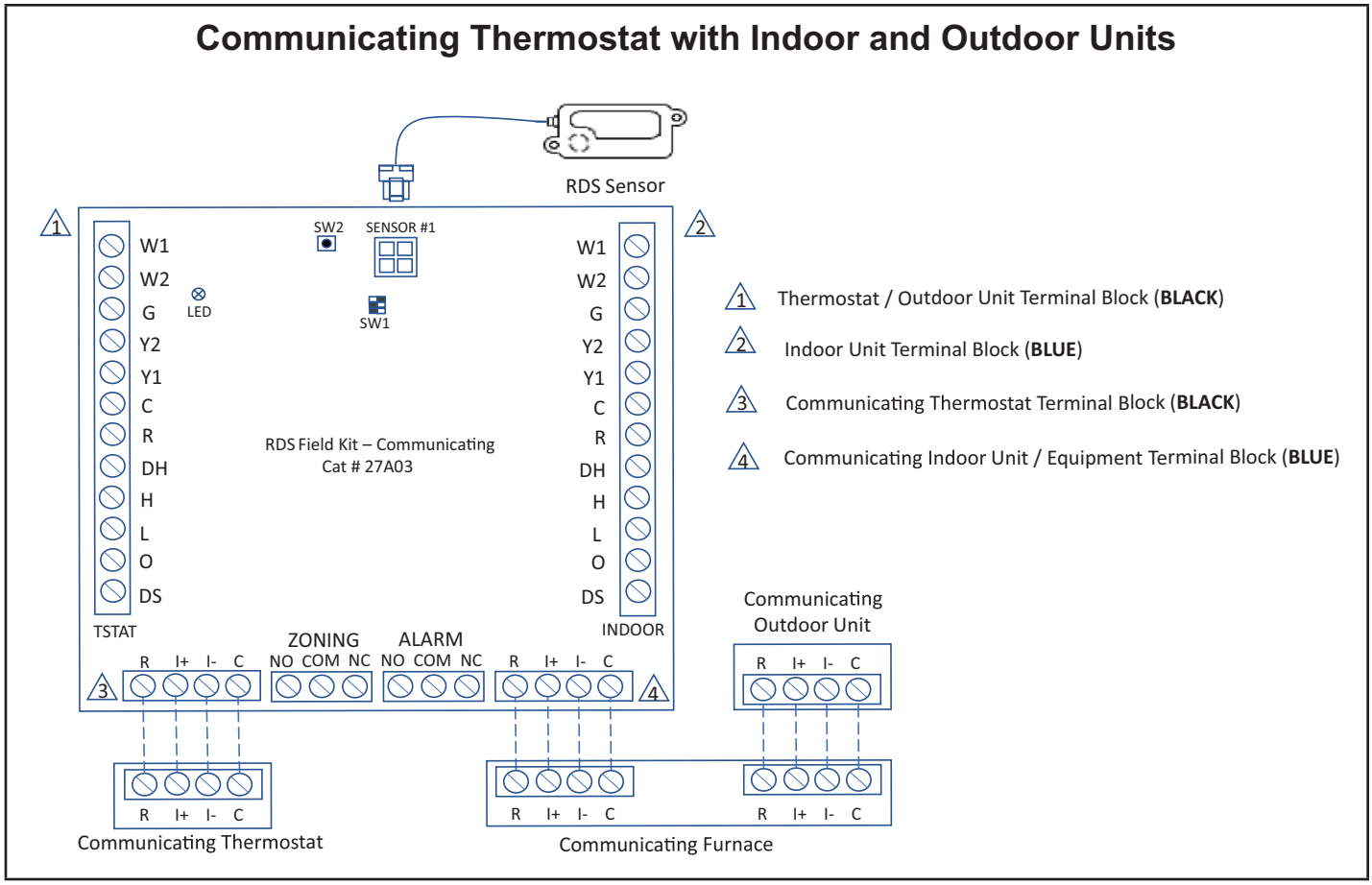

FIGURE 12. EL22KCV with S40 Communicating Thermostat – Field Wiring Diagram with RDS Controller.

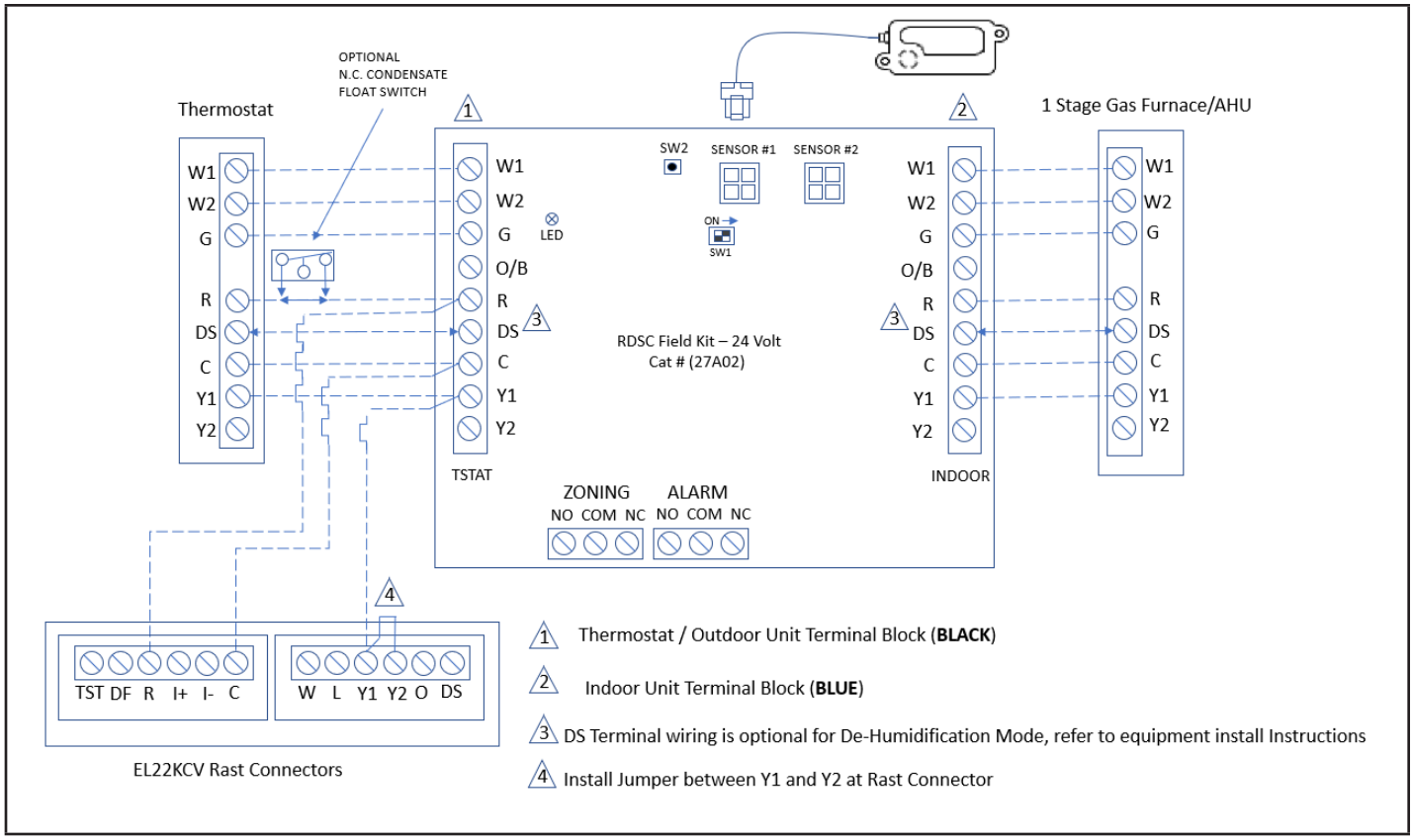

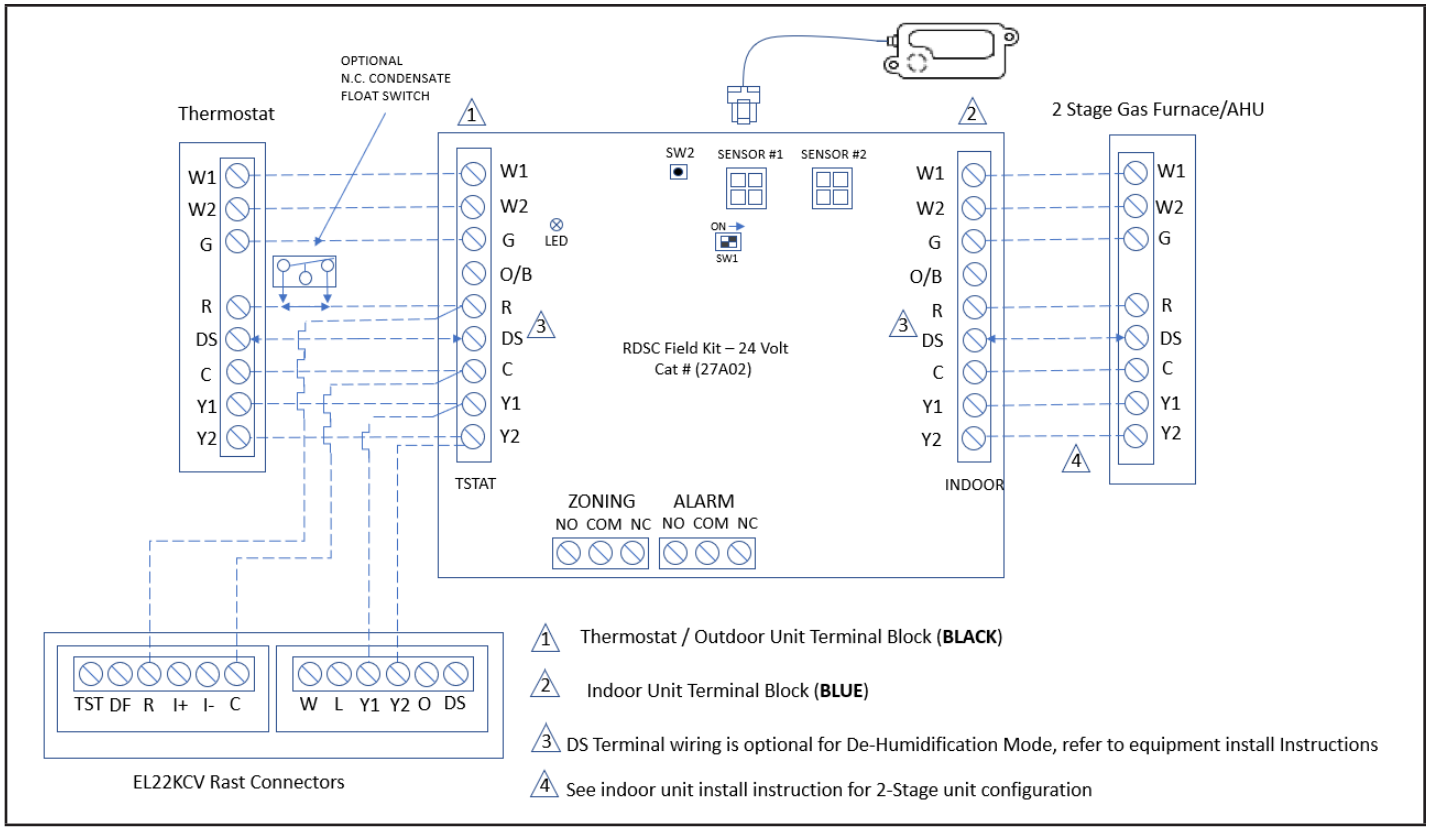

FIGURE 13. Conventional 24VAC Cooling Non-Communicating Thermostat Wiring with RDS Controller

Unit Operation

EL22KCV Unit Operation with a S40 Communicating Thermostat

When the EL22KCV unit is installed with a S40 Communicating Thermostat and communicating indoor unit, the unit capacity will be controlled in the variable capacity mode throughout the range of capacity from minimum capacity to maximum capacity based upon thermostat demand. The indoor air volume will be controlled to match cooling capacity throughout the capacity range.

EL22KCV Unit Operation with a Conventional 24VAC Non-Communicating 2-Stage Thermostat

When the EL22KCV unit is installed with a conventional 24VAC non-communicating 2-stage thermostat, a Y1 first stage cooling demand will initiate cooling operation and first stage indoor blower operation. The compressor will be controlled in the variable capacity mode by varying the compressor capacity to obtain the target suction pressure set point. The Y2 second stage cooling demand will initiate second stage blower operation. Increased air volume will increase the load on the indoor coil and increase the suction pressure. The EL22KCV compressor capacity will continue to be controlled based upon the suction pressure. The unit capacity will be controlled in the variable capacity mode throughout the range of capacity from minimum capacity to maximum capacity. If the Y2 demand remains after 20 minutes, the EL22KCV control will begin to ramp up the compressor capacity until maximum capacity is achieved. The EL22KCV unit will cycle off once the thermostat demand is satisfied.

EL22KCV Unit Operation with a Conventional 24VAC Non-Communicating Single-Stage Thermostat

When the EL22KCV unit is installed with a conventional 24VAC non-communicating single-stage thermostat, a Y1 first stage cooling demand will initiate cooling operation and cooling indoor blower operation. In single stage thermostat applications, a jumper must be installed between Y1 and Y2 on the EL22KCV outdoor control. The compressor will be controlled in the variable capacity mode by varying the compressor capacity to obtain the target suction pressure set point. If the cooling demand remains after 20 minutes, the EL22KCV control will begin to ramp up the compressor capacity until maximum capacity is achieved. The EL22KCV unit will cycle off once the thermostat demand is satisfied.

UNIT START-UP

⚠ IMPORTANT

If unit is equipped with a crankcase heater, it should be energized 24 hours before unit start-up to prevent compressor damage as a result of slugging.

1 - Rotate fan to check for binding.
2 - Inspect all factory- and field-installed wiring for loose connections.
3 - After evacuation is complete, open the liquid line and vapor line service valve stems to release the refrigerant charge (contained in outdoor unit) into the system.
4 - Replace the stem caps and tighten to the value listed in table 2.
5 - Check voltage supply at the disconnect switch. The voltage must be within the range listed on the unit's nameplate. If not, do not start the equipment until you have consulted with the power company and the voltage condition has been corrected.
6 - Connect manifold gauge set for testing and charging or use the Lennox Dealer Setup App to monitor the pressures and temperatures of the refrigeration system.
7 - Turn on power to the indoor unit and close the outdoor unit disconnect switch to start the unit. Start-up and testing should be performed with the unit operating at the maximum cooling capacity (100% capacity). The unit can be operated at maximum capacity by entering the test mode at the thermostat or using the Lennox Dealer Setup App. The S40 Test Mode can be selected by going to Menu> Advanced Settings> View Dealer Control Center> Test and then select Cooling - Maximum Rate Test.
8 - Recheck voltage while the unit is running. Power must be within range shown on the unit nameplate.
9 - Check system for sufficient refrigerant using the procedures outlined under *Checking Refrigerant Charge.*
10 - Test functionality or Refrigerant Detection System.

OPERATING MANIFOLD GAUGE SET AND SERVICE VALVES

The liquid and vapor line service valves are used for removing refrigerant, flushing, leak testing, evacuating, checking charge and charging.

Each valve is equipped with a service port which has a factory-installed valve stem. Figures 14 and 15 provide information on how to access and operate both angle- and ball-type service valves.

Torque Requirements

When servicing or repairing heating, ventilating and air conditioning components, ensure the fasteners are appropriately tightened. Table 2 lists torque values for fasteners.

TABLE 1 – TORQUE REQUIREMENTS

Parts	Recommended Torque	
Service valve cap	8 ft.-lb.	11 NM
Sheet-metal screws	16 in.-lb.	2 NM
Machine screws #10	28 in.-lb.	3 NM
Compressor bolts	90 in.-lb.	10 NM
Gauge port seal cap	8 ft.-lb.	11 NM

⚠ IMPORTANT

To prevent stripping of the various caps used, the appropriately sized wrench should be used and fitted snugly over the cap before tightening.

Using Manifold Gauge Set

When checking the system charge, only use a manifold gauge set that features low loss anti-blow back fittings.

Manifold gauge set used with R454B refrigerant systems must be capable of handling the higher system operating pressures. The gauges should be rated for use with pressures of 0 - 800 psig on the high side and a low side of 30" vacuum to 250 psig with dampened speed to 500 psi. Gauge hoses must be rated for use at up to 800 psig of pressure with a 4000 psig burst rating.

OPERATING BALL-TYPE SERVICE VALVE

1 - Remove stem cap with an appropriately sized wrench.

2 - Use an appropriately sized wrench to open. To open valve, rotate stem counterclockwise 90°. To close, rotate stem clockwise 90°.

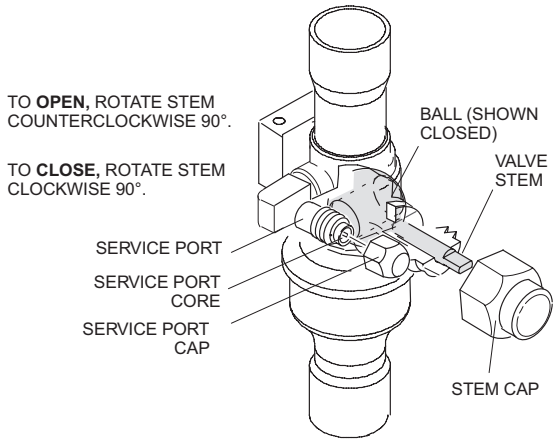

FIGURE 14

OPERATING ANGLE-TYPE SERVICE VALVE

1 - Remove stem cap with an appropriately sized wrench.

2 - Use a service wrench with a hex-head extension (3/16" for liquid line valve sizes and 5/16" for vapor line valve sizes) to back the stem out counterclockwise as far as it will go.

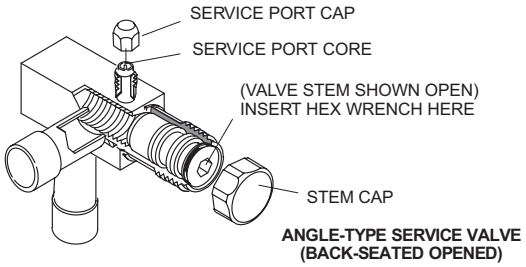

When service valve is **OPEN**, the service port is open to line set, indoor and outdoor unit.

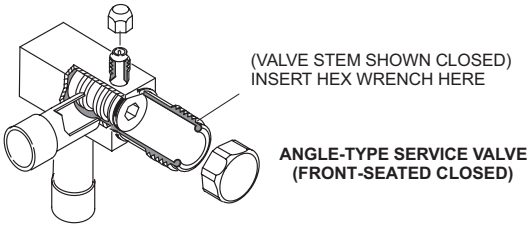

When service valve is **CLOSED**, the service port is open to the line set and indoor unit.

NOTE - *A label with specific torque requirements may be affixed to the stem cap. If the label is present, use the specified torque.*

FIGURE 15

ACCESS SERVICE PORT

A service port cap protects the service port core from contamination and serves as the primary leak seal.

1 - Remove service port cap with an appropriately sized wrench.

2 - Connect gauge set to service port.

3 - When testing is completed, replace service port cap and tighten as follows:

- With torque wrench, finger tighten and torque cap per table 2.
- Without torque wrench, finger tighten and use an appropriately sized wrench to turn an additional 1/6 turn clockwise.

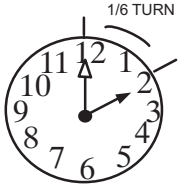

Reinstall Stem Cap

Stem cap protects the valve stem from damage and serves as the primary seal. Replace the stem cap and tighten as follows:

- With torque wrench, finger tighten and then torque cap per table 2.
- Without torque wrench, finger tighten and use an appropriately sized wrench to turn an additional 1/12 turn clockwise.

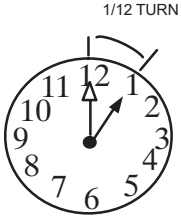

FIGURE 16

Charging

The EL22KCV unit is factory charged with R454B. Refer to unit Charging Label for baseline line set length for factory unit charge and Additional Charge guidelines.

Charge should be checked and adjusted using the tables provided on the charging procedure sticker on the unit access panel. Detailed information is given in the EL22KCV Installation and Service Procedures manual, which is available on LennoxPros.com.

R454B is a zeotropic blend, will need to use saturated liquid temperature to calculate liquid subcooling .

Charge unit with liquid only.

⚠ IMPORTANT

System charging should be performed with the unit operating at the maximum cooling capacity (100% capacity). The unit can be operated at maximum capacity by entering the test mode at the S40 thermostat or using the Lennox Dealer Setup App. The S40 Test Mode can be selected by going to Menu> Advanced Settings> View Dealer Control Center> Test and then select Cooling - Maximum Rate Test. Seven-segment display on outdoor control will show outdoor unit running capacity.

Refrigerant Charge per Line Set Length

LIQUID LINE DIA.	OUNCES PER 5 FEET (G PER 1.5 M) ADJUST FROM 15 FEET (4.6 M) LINE SET*
3/8" (9.5 MM)	3 OUNCES PER 5' (85 G PER 1.5 M)

*If line length is greater than 15 ft. (4.6 m), add this amount. If line length is less than 15 ft. (4.6 m), subtract this amount.

NOTE – Insulate liquid line when it is routed through areas where the surrounding ambient temperature could become higher than the temperature of the liquid line or when pressure drop is equal to or greater than 20 psig.

Alarms

Alarm information is provided on on the outdoor unit access panel and in the S40 Thermostat Installation and Setup Guide. Detail alarm information is also available in the EL22KCV Installation and Service Procedures manual, which is available on LennoxPros.com..

Outdoor Control Seven-Segment Display and Push Button

Information concerning the outdoor control seven-segment display and push button operations are available on the unit access panel and in the EL22KCV Installation and Service Procedures manual.

System Component Configuration (Outdoor Unit)

All configuration of the outdoor unit is completed using the S40 thermostat. Please refer to the S40 Thermostat Installation and Setup Guide for complete details on how to integrate this unit into a communicating system.

High Pressure Switch (S4)

This unit is equipped with a high pressure switch which is located on the liquid line. The SPST, normally closed pressure switch opens when liquid line pressure rises above the factory setting of 590 ± 15 psig and automatically resets at 418 ± 15 psig.

Homeowners Information

⚠ CAUTION

Before attempting to perform any service or maintenance, turn the electrical power to unit OFF at disconnect switch.

In order to ensure peak performance, your system must be properly maintained. Clogged filters and blocked airflow prevent your unit from operating at its most efficient level. The system should be inspected and serviced before each cooling and heating season by a licensed professional HVAC service technician (or equivalent).

Homeowner Maintenance

The following maintenance may be performed by the homeowner.

- Contact a licensed professional HVAC technician to schedule inspection and maintenance appointments for your equipment before each heating and cooling season.
- Check the indoor unit filter each month and replace the filter, if necessary.
- Have your Lennox dealer show you where your indoor unit filter is located. It will be either at the indoor unit (installed internal or external to the cabinet) or behind a return air grille in the wall or ceiling. Check the filter monthly and clean or replace it as needed. Disposable filters should be replaced with a filter of the same type and size.
- Check the indoor unit drain line for obstructions monthly. The indoor coil is equipped with a drain pan to collect condensate formed as your system removes humidity from the inside air. Have your dealer show you the location of the drain line and how to check for obstructions. (This would also apply to an auxiliary drain, if installed.)
- Check the area around the outdoor unit monthly and remove any obstructions that may restrict airflow to the outdoor unit. This would include grass clippings, leaves, or papers that may have settled around the unit.
- Trim shrubbery away from the unit and periodically check for debris which collects around the unit.
- During the winter months, keep the snow level below the louvered panels.

***NOTE** - The filter and all access panels must be in place any time the unit is in operation. If you are unsure about the filter required for your system, call your Lennox dealer for assistance.*

⚠ IMPORTANT

Sprinklers and soaker hoses should not be installed where they could cause prolonged exposure to the outdoor unit by treated water. Prolonged exposure of the unit to treated water (i.e., sprinkler systems, soakers, waste water, etc.) will corrode the surface of the steel and aluminum parts, diminish performance and affect longevity of the unit.

Thermostat Operation

See the thermostat homeowner manual for instructions on how to operate your thermostat.

Pre-Service Check

If your system fails to operate, check the following before calling for service:

- Verify room thermostat settings are correct.
- Verify that all electrical disconnect switches are ON.
- Check for any blown fuses or tripped circuit breakers.
- Verify unit access panels are in place.
- Verify air filter is clean.

If service is needed, locate and write down the unit model number and have it handy before calling.

Professional Maintenance

NOTICE !

Failure to follow instructions will cause damage to the unit.

This unit is equipped with an aluminum coil. Aluminum coils may be damaged by exposure to solutions with a pH below 5 or above 9. The aluminum coil should be cleaned using potable water at a moderate pressure (less than 50psi). If the coil cannot be cleaned using water alone, Lennox recommends use of a coil cleaner with a pH in the range of 5 to 9. The coil must be rinsed thoroughly after cleaning.

In coastal areas, the coil should be cleaned with potable water several times per year to avoid corrosive buildup (salt).

Your heating and air conditioning system should be inspected and maintained twice each year (before the start of the cooling and heating seasons) by a licensed professional HVAC technician. You can expect the technician to check the following items. **These checks may only be conducted by a licensed professional HVAC technician**.

Outdoor Unit

1 - Inspect component wiring for loose, worn or damaged connections. Also check for any rubbing or pinching of wires. Confirm proper voltage plus amperage of outdoor unit.

2 - Check the cleanliness of outdoor fan and blade condition (cracks) and clean or replace them, if necessary.

3 - Inspect base pan drains for debris and clean as necessary.

4 - Inspect the condition of refrigerant piping and confirm that pipes are not rubbing copper-to-copper. Also, check the condition of the insulation on the refrigerant lines. Repair, correct, or replace as necessary.

5 - Test capacitor. Replace as necessary.

6 - Inspect contactor contacts for pitting or burn marks. Replace as necessary.

7 - Check outdoor fan motor for worn bearings/bushings. Replace as necessary.

8 - Inspect and clean outdoor coils, if necessary and note any damage to coils or signs of leakage.

Indoor Unit (Air Handler or Furnace)

1 - Inspect component wiring for loose, worn or damaged connections. Confirm proper voltage plus amperage of indoor unit.

2 - Inspect and clean or replace air filters in indoor unit.

3 - Check the cleanliness of indoor blower and clean blower, if necessary.

4 - Inspect the indoor coil drain pans and condensate drains for rust, debris, obstructions, leaks or cracks. Pour water in pans to confirm proper drainage from the pan through to the outlet of the pipe. Clean or replace as necessary.

5 - Inspect and clean indoor coil, if necessary.

6 - Inspect the condition of the refrigerant lines and confirm that pipes are not rubbing copper-to-copper. Also, ensure that refrigerant pipes are not being affected by indoor air contamination. Check condition of insulation on the refrigerant lines. Repair, correct, or replace as necessary.

7 - Inspect the duct system for leaks or other problems. Repair or replace as necessary.

8 - Check for bearing/bushing wear on indoor blower motor. Replace as necessary.

9 - If your system is matched with a gas- or oil-fired furnace for heating, indoor unit service will also include inspection and cleaning of the burners, and a full inspection of the gas valve, heat exchanger and flue (exhaust) system.

10 - Check functionality of Refrigerant Detection System.

11 - Inspect refrigerant detection sensor.

General System Test with System Operating

1 - Your technician should perform a general system test. He will turn on the air conditioner to check operating functions such as the startup and shutoff operation. He will also check for unusual noises or odors, and measure indoor/outdoor temperatures and system pressures as needed. He will check the refrigerant charge per the charging sticker information on the outdoor unit.

2 - Verify that system total static pressure and airflow settings are within specific operating parameters.

3 - Verify correct temperature drop across indoor coil.

EL22KCV Start-Up and Performance Checklist

Customer _____ Address _____

Indoor Unit Model _____ Serial _____

Outdoor Unit Model _____ Serial _____

Notes: _____

_____

START UP CHECKS

Refrigerant Type: _____

Input Amps: _____ Actual Amps___ Rated Volts_____ Actual Volts_____

Condenser Fan Full Load Amps_____ Actual Amps:__

COOLING MODE

Suction Pressure: _____ **Liquid Pressure:**____

Supply Air **Temperature:**_____ Ambient **Temperature:** _____ Return Air: **Temperature:**_____

System Refrigerant Charge (Refer to manufacturer's information on unit or installation instructions for required subcooling and approach temperatures.)

Subcooling: Saturated Condensing Temperature (A) *minus* Liquid Line Temperature (B)	A	—	B	=	SUBCOOLING
Approach: Liquid Line Temperature (A) *minus* Outdoor Air Temperature (B)	A	—	B	=	APPROACH
Indoor Coil Temperature Drop (18 to 22°F) Return Air Temperature (A) *minus* Supply Air Temperature (B)	A	—	B	=	COIL TEMP DROP