©2025 Lennox Industries Inc.
Dallas, Texas, USA

THIS MANUAL MUST BE LEFT WITH THE HOMEOWNER FOR FUTURE REFERENCE

⚠ WARNING

Every working procedure that affects safety means shall only be carried out by competent persons. This appliance is not to be used by persons (including children) with reduced physical, sensory or mental capabilities, or lack of experience and knowledge, unless they have been given supervision or instruction concerning use of the appliance by a person responsible for their safety. Children should be supervised to ensure they do not play with the appliance.

⚠ WARNING

Maximum Altitude of application is 3200m above sea level.

Disponible en español en LennoxPros.com

Disponible en Français sur le LennoxPros.com site

⚠ WARNING

Improper installation, adjustment, alteration, service or maintenance can cause property damage, personal injury or loss of life. Installation and service must be performed by a licensed professional HVAC installer or equivalent, service agency, or the gas supplier.

INSTALLATION INSTRUCTIONS

Merit® Series
CBA25UHE Air Handler Units – R410A

MULTI-POSITION AIR HANDLERS
For Servicing Existing Equipment Only
(US Applications)
508370-02
01/2025

Table of Contents

General Information 2
Wiring Diagrams 3
Air Flow – Cooling Blower Speed 4
Blower Data 5
Electrical Connections 7
Requirements 8
Unit Dimensions – Upflow Position....10
Unit Dimensions – Horizontal Position 11
Check-out Procedures 12
Operation 12
Installation Clearances 13
Installation 13
Condensate Drain....15
Duct System and Filters 16
Brazing Refrigerant Lines 17
Sealing the Unit 20
Homeowner Maintenance 20
Repairing or Replacing Cabinet Insulation 20
Professional Maintenance 20
Use of Air Handler During Construction 21
Decommissioning 21

***NOTE** – This unit is a PARTIAL UNIT AIR CONDITIONER, complying with PARTIAL UNIT requirements of this Standard, and must only be connected to other units that have been confirmed as complying to corresponding PARTIAL UNIT requirements of this Standard, UL 60335-2-40/CSA C22.2 No. 60335-2-40, or UL 1995/CSA C22.2 No 236. Partial units shall only be connected to an appliance suitable for the same refrigerant.*

⚠ IMPORTANT

The Clean Air Act of 1990 bans the intentional venting of refrigerant (CFCs, HCFCs and HFCs) as of July 1, 1992. Approved methods of recovery, recycling or reclaiming must be followed. Fines and/or incarceration may be levied for noncompliance.

0125
508370-02

Shipping and Packing List

Package 1 of 1 contains:

1 – Assembled air handler unit factory-equipped for upflow or horizontal air discharge application (includes upflow and horizontal drain pans and **preinstalled air filter**).

Check the air handler for shipping damage; if found, immediately contact the last carrier. Check the unit rating plate to confirm that delivered unit matches order.

IMPORTANT: Special procedures are required for cleaning the all-aluminum coil in this unit. See page 20 in this instruction for information.

General Information

The CBA25UHE series air handler **with all-aluminum coil** is designed for indoor installation in conditioned or unconditioned spaces. As shipped, the unit is ready for installation in either upflow, horizontal left-hand or right-hand air discharge applications. Electric heat, downflow conversion kits, air filters and other accessories are available and listed in the *CBA25UHE Product Specification bulletin* for ordering.

This instruction is intended as a general guide and does not supersede local or national codes in any way. Consult authorities having jurisdiction before installation.

Wiring Diagrams

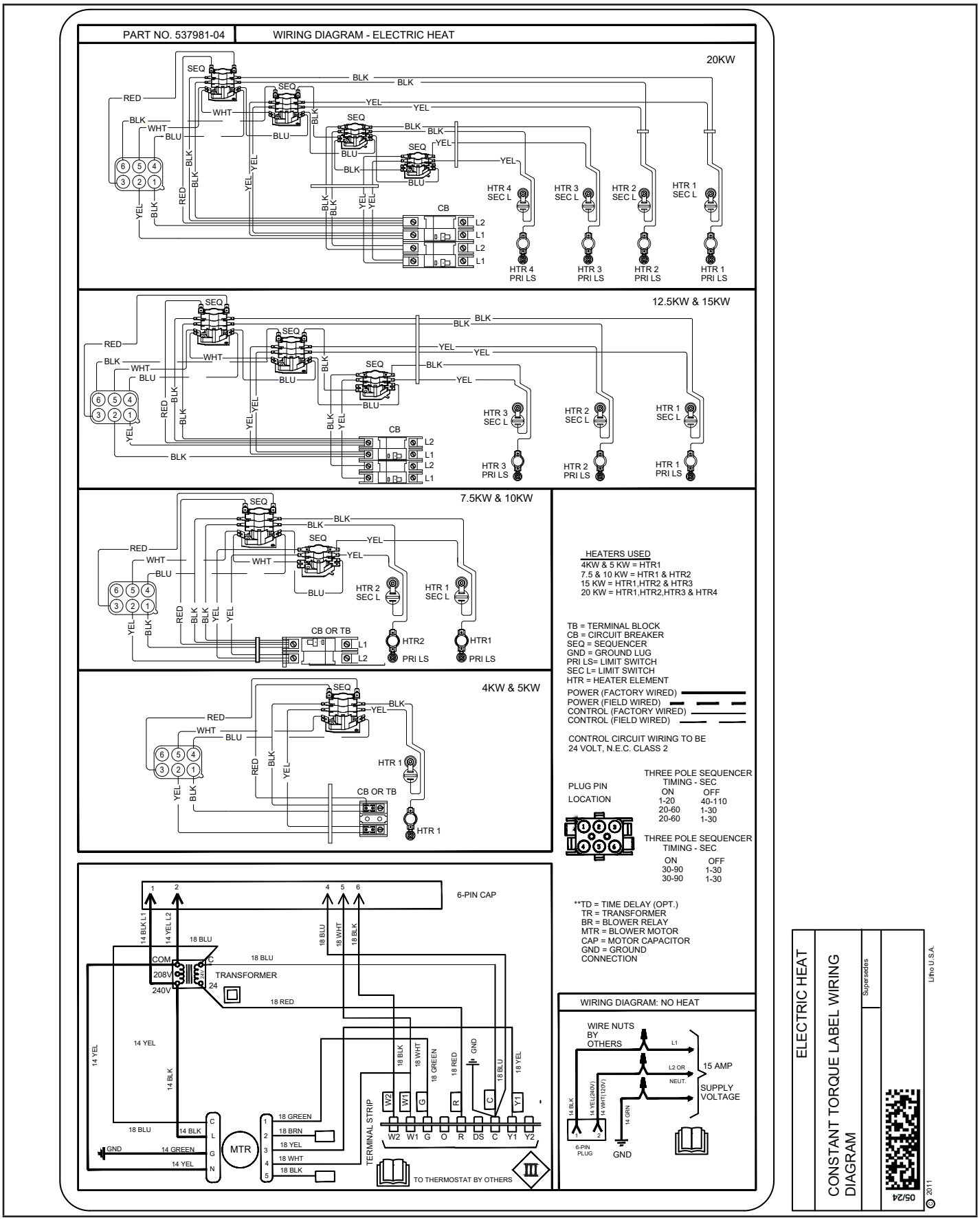

FIGURE 1. Typical Wiring Diagram – CBA25UHE Air Handler with Electric Heat – CT

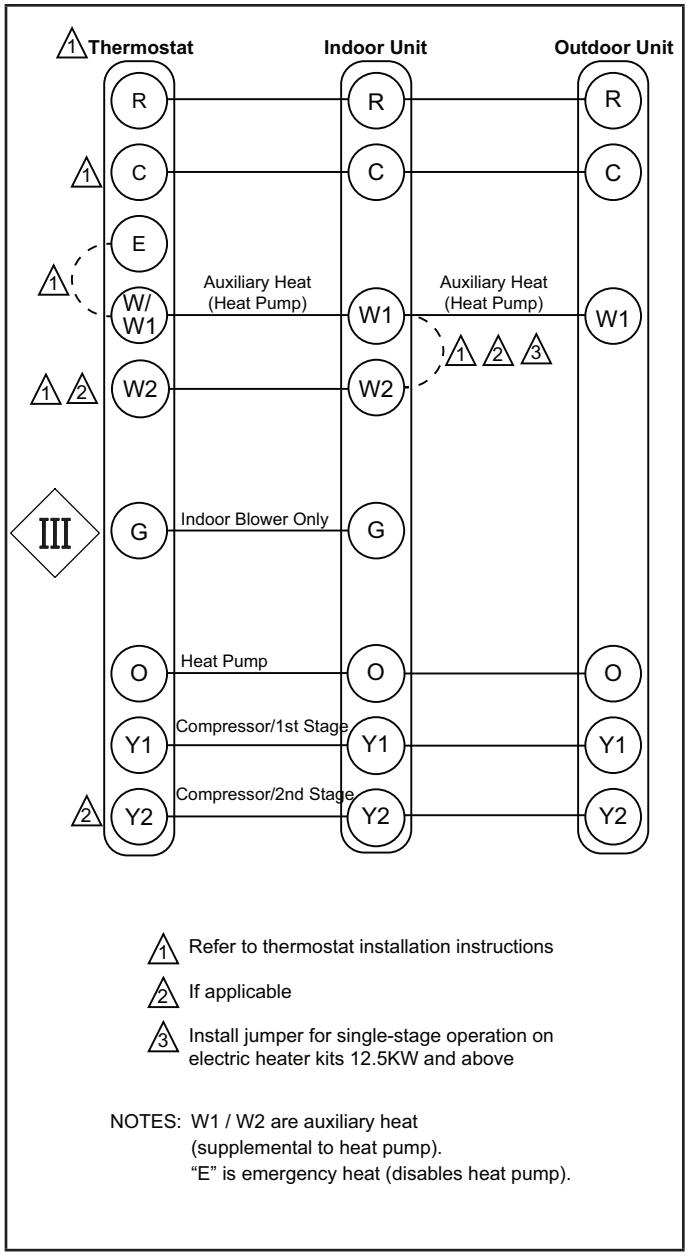

FIGURE 2. Thermostat Designations – Non-Communicating

Air Flow – Cooling Blower Speed

The cooling blower speed is factory configured to provide correct air flow for an outdoor unit that matches the cooling capacity rating of the air handler.

If the outdoor unit is smaller than the maximum cooling capacity rating for the air handler, the cooling blower speed may need to be changed. Refer to blower performance data on pages 5 and 6.

⚠ WARNING

Electric shock hazard! - Disconnect all power supplies before servicing.

Replace all parts and panels before operating.

Failure to do so can result in death or electrical shock.

ADJUSTING BLOWER SPEED

Motor Speed Taps

***NOTE** – Motor is programmed for a 45-second OFF delay on all speed taps except TAP #4 (electric heat – 120-second OFF delay).*

These settings are for nominal tonnage match-ups with the units. When matched with other sizes, it is recommended that the CFM be adjusted to approximately 400 CFM per ton.

Tap	Operation	Remarks
1	Continuous fan	Continuous fan speed is energized (24 volt input to G).
2	Lower tonnage speed	Air flow set at 1/2 ton lower than nominal capacity (e.g. if 3-ton air handler is used with 2.5-ton outdoor unit).
3	A/C or heat pump - no electric heat	Air flow set at 400 SCFM per ton at minimum static allowed.
4*	A/C or Heat pump with electric heat	Air flow set at 400 SCFM per ton at .5 static. Energized when electric heat element has a call for heat.
5	High static applications	Air flow set at 400 cfm per ton at .8 static.
* Tap 4 is minimum setting for electric heat		

TABLE 1

Blower Data

CBA25UHE-024

External Static Pressure in. w.g.	Air Volume and Motor Watts									
	Tap 1		Tap 2		Tap 3		Tap 4		Tap 5	
	cfm	Watts	cfm	Watts	cfm	Watts	cfm	Watts	cfm	Watts
0.1	676	64	820	107	1015	180	1015	180	1054	194
0.2	612	71	780	114	981	188	981	188	1020	203
0.3	514	77	752	120	953	195	953	195	987	212
0.4	448	83	712	126	922	204	922	204	958	219
0.5	400	86	678	133	899	210	899	210	940	226
0.6	337	92	598	142	865	219	865	219	902	235
0.7	270	100	535	147	831	224	831	224	881	241
0.8	203	103	495	153	799	237	799	237	833	248

CBA25UHE-030

External Static Pressure in. w.g.	Air Volume and Motor Watts									
	Tap 1		Tap 2		Tap 3		Tap 4		Tap5	
	cfm	Watts	cfm	Watts	cfm	Watts	cfm	Watts	cfm	Watts
0.1	775	87	999	160	1132	219	1132	219	1341	346
0.2	731	94	965	168	1099	229	1099	229	1309	357
0.3	690	100	936	175	1068	237	1068	237	1289	364
0.4	647	106	899	184	1041	245	1041	245	1259	376
0.5	565	115	870	191	1014	254	1014	254	1239	385
0.6	522	118	833	197	985	261	985	261	1197	389
0.7	474	125	797	208	957	269	957	269	1168	395
0.8	406	132	715	218	928	278	928	278	1139	403

CBA25UHE-036

External Static Pressure in. w.g.	Air Volume and Motor Watts									
	Tap 1		Tap 2		Tap 3		Tap 4		Tap 5	
	cfm	Watts	cfm	Watts	cfm	Watts	cfm	Watts	cfm	Watts
0.1	865	94	1303	250	1415	312	1415	312	1523	386
0.2	812	104	1268	261	1381	325	1381	325	1492	399
0.3	747	113	1234	271	1352	336	1352	336	1462	411
0.4	674	119	1199	283	1316	348	1316	348	1434	423
0.5	620	125	1153	295	1285	360	1285	360	1403	434
0.6	565	131	1117	306	1238	377	1238	377	1363	452
0.7	484	138	1047	323	1202	386	1202	386	1315	456
0.8	422	144	1004	326	1134	396	1134	396	1281	467

CBA25UHE-042

External Static Pressure in. w.g.	Air Volume and Motor Watts									
	Tap 1		Tap 2		Tap 3		Tap 4		Tap 5	
	cfm	Watts	cfm	Watts	cfm	Watts	cfm	Watts	cfm	Watts
0.1	982	132	1446	390	1560	473	1560	473	1656	569
0.2	923	140	1413	402	1526	488	1526	488	1624	581
0.3	866	148	1362	411	1500	498	1500	498	1594	591
0.4	812	153	1357	420	1469	510	1469	510	1563	602
0.5	745	162	1325	429	1437	520	1437	520	1543	613
0.6	686	169	1292	438	1413	530	1413	530	1505	615
0.7	642	176	1257	448	1345	543	1345	543	1456	613
0.8	568	185	1221	458	1335	544	1335	544	1417	612

CBA25UHE-048

External Static Pressure in. w.g.	Air Volume and Motor Watts									
	Tap 1		Tap 2		Tap 3		Tap 4		Tap 5	
	cfm	Watts	cfm	Watts	cfm	Watts	cfm	Watts	cfm	Watts
0.1	1899	512	1773	426	1733	395	1524	279	1277	187
0.2	1867	530	1741	443	1697	410	1480	295	1234	197
0.3	1837	544	1704	460	1661	424	1442	307	1190	208
0.4	1806	559	1678	472	1629	437	1400	321	1145	217
0.5	1775	574	1645	486	1597	449	1348	332	1099	229
0.6	1745	588	1612	500	1552	466	1323	344	1011	243
0.7	1710	604	1577	514	1519	478	1284	356	934	252
0.8	1680	616	1546	525	1482	491	1212	372	896	258
0.9	1644	632	1509	539	1451	502	1129	385	845	272

CBA25UHE-060

External Static Pressure in. w.g.	Air Volume and Motor Watts									
	Tap 1		Tap 2		Tap 3		Tap 4		Tap 5	
	cfm	Watts	cfm	Watts	cfm	Watts	cfm	Watts	cfm	Watts
0.1	2010	630	1903	553	1826	496	1673	387	1147	144
0.2	1976	642	1876	566	1791	512	1630	402	1085	155
0.3	1947	656	1843	583	1762	525	1596	415	1035	164
0.4	1912	672	1815	596	1732	538	1563	428	1006	171
0.5	1883	683	1782	613	1704	551	1526	443	954	180
0.6	1851	701	1750	627	1669	567	1495	455	825	194
0.7	1821	715	1722	641	1637	582	1464	467	783	199
0.8	1776	717	1691	655	1602	597	1436	477	739	208
0.9	1745	722	1643	656	1583	604	1406	488	687	219

- NOTE – All air data measured external to unit with dry coil and 1 inch non-pleated air filter in place.

Electric heaters have no appreciable air resistance.

⚠ IMPORTANT

This unit is approved for installation clearance to combustible material as stated on the unit rating plate. Accessibility and service clearances must take precedence over combustible material clearances.

The air handler must be installed so that free access is allowed to the coil/filter compartment and blower/control compartment.

⚠ CAUTION

As with any mechanical equipment, contact with sharp sheet metal edges can result in personal injury. Take care while handling this equipment and wear gloves and protective clothing.

⚠ WARNING

To prevent serious injury or death:

1. Lock-out/tag-out before performing maintenance.
2. If system power is required (e.g., smoke detector maintenance), disable power to blower, remove fan belt where applicable, and ensure all controllers and thermostats are set to the “OFF” position before performing maintenance.
3. Always keep hands, hair, clothing, jewelry, tools, etc. away from moving parts.

⚠ WARNING

Excessive Weight Hazard - Use two or more people when moving and installing the unit. Failure to do so can result in back or other type of injury.

Electrical Connections

⚠ WARNING

Electric shock hazard! - Disconnect all power supplies before servicing.

Replace all parts and panels before operating.

Failure to do so can result in death or electrical shock.

⚠ WARNING

Electric Shock Hazard.

Can cause injury or death.

Foil-faced insulation has conductive characteristics similar to metal. Be sure there are no electrical connections within 1/2" of the insulation. If the foil-faced insulation comes in contact with electrical voltage, the foil could provide a path for current to pass through to the outer metal cabinet. While the current produced may not be enough to trip existing electrical safety devices (e.g., fuses or circuit breakers), the current can be enough to cause an electrical shock hazard that could cause personal injury or death.

⚠ WARNING

Electric Shock Hazard. Can cause injury or death. Unit must be properly grounded in accordance with national and local codes.

Line voltage is present at all components when unit is not in operation on units with single-pole contactors. Disconnect all remote electric power supplies before opening access panel. Unit may have multiple power supplies.

⚠ WARNING

Run 24V Class II wiring only through specified low voltage opening. Run line voltage wiring only through specified high voltage opening. Do not combine voltage in one opening.

- Wiring must conform to the current National Electric Code ANSI/NFPA No. 70, or Canadian Electric Code Part I, CSA Standard C22.1, and local building codes. Refer to following wiring diagrams. See unit nameplate for minimum circuit ampacity and maximum over-current protection size.
- Electrical wiring, disconnect means and over-current protection are to be supplied by the installer. Refer to the air handler rating plate for maximum over-current protection, minimum circuit ampacity, as well as operating voltage. Select the proper supply circuit conductors in accordance with tables 310-16 and 310-17 in the National Electric Code, ANSI/NFPA No. 70 or tables 1 through 4 in the Canadian Electric Code, Part I, CSA Standard C22.1.
- The power supply must be sized and protected according to the specifications supplied on the product.
- This air handler is factory-configured for 240 volt, single phase, 60 cycles. For 208-volt applications, see “208 Volt Conversion” later in this section.
- Separate openings have been provided for 24V low voltage and line voltage. Refer to the dimension illustration for the corresponding location.
- This unit is provided with holes for conduit. Use provided caps to seal holes not used.
- Typical unit wiring (as well as wiring of optional field-installed electric heat) is given in figure 1. Refer to the instructions provided with the electric heat section for proper installation.

⚠ WARNING

USE COPPER CONDUCTORS ONLY

1 - Disconnect all power supplies.
2 - Remove the air handler access panel.
3 - Route the field supply wires to the air handler electrical connection box.
4 - Use UL-listed wire nuts to connect the field supply conductors to the unit black and yellow leads, and the ground wire to ground terminal marked GND.
5 - Replace the air handler access panel.

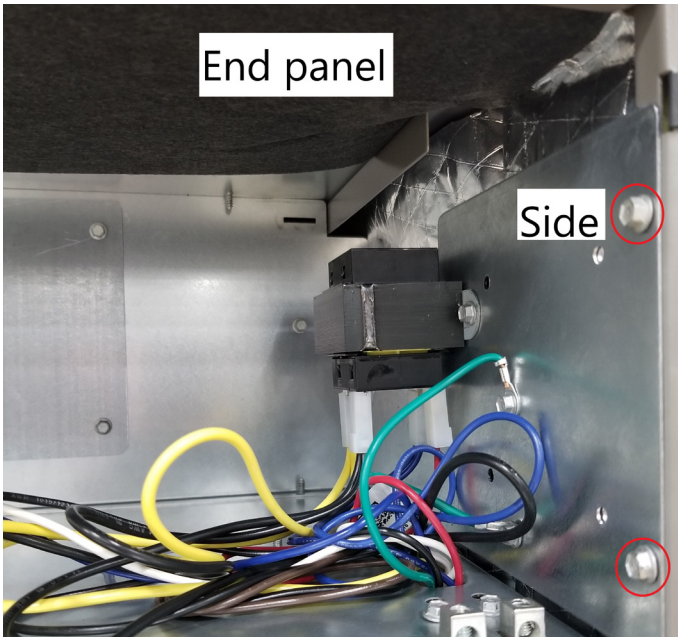

FIGURE 3. Electrical Connections (Upflow Configuration)

Control Panel Relocation

To avoid the possibility of moisture damage to the control in some right-hand discharge configurations, the control panel can be relocated to the end panel as shown in figure 5.

1 - Remove the two screws that secure the control panel to the cabinet. See figure 3. Slide panel out.

2 - Slide the control panel into the notch on the electric heat mounting panel (figure 4). Using the screws removed in Step 1, secure the control panel to the end panel, as shown in figure 5.

⚠ WARNING

Electrically ground air handler. Connect ground wire to ground terminal marked "GND".

Failure to do so can result in death or electrical shock.

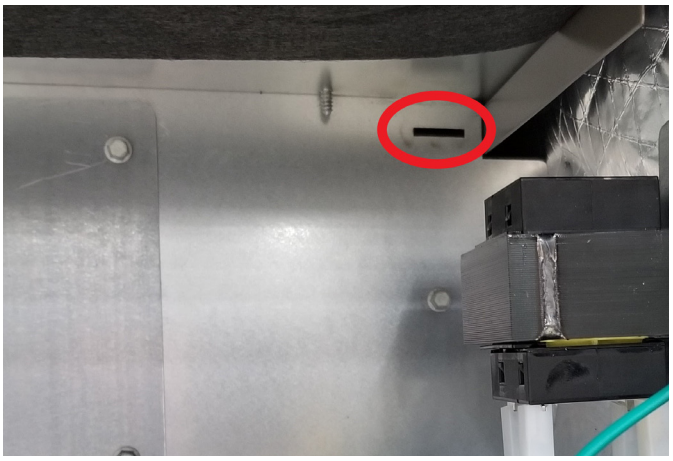

FIGURE 4. Notch for Control Panel Relocation

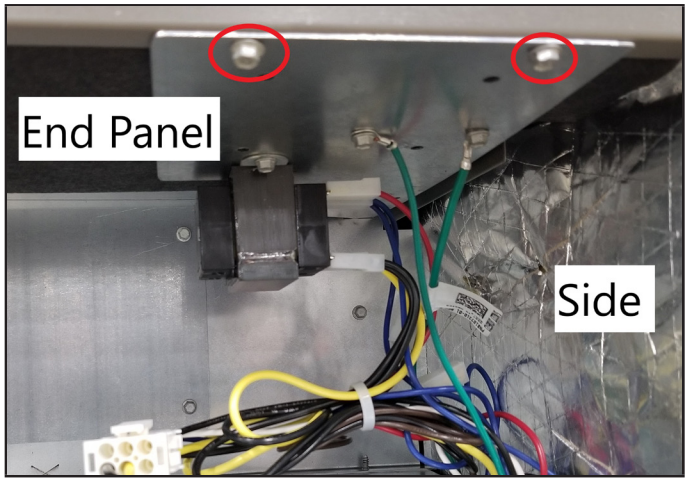

FIGURE 5. Control Panel Relocated to End Panel (Horizontal-Right Configuration)

208 VOLT CONVERSION

1 - Disconnect all power supplies.

2 - Remove the air handler access panel.

3 - Using the wiring diagram located on the unit access panel as a reference, move the 2 connected black transformer leads from the 240 volt terminal on the transformer to the 208 volt terminal on the transformer.

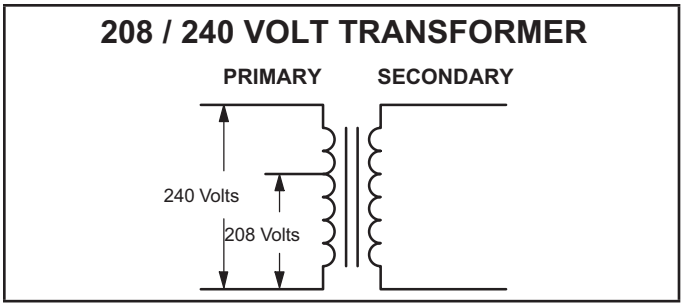

FIGURE 6. Converting Unit from 240VAC to 208VAC

Requirements

⚠ IMPORTANT

CBA25UHE units include a factory-installed check/expansion valve which will provide optimal refrigerant control and system performance with outdoor units of varying capacities. These units must be installed as a part of a matched system as outlined in the CBA25UHE Product Specification bulletin.

These instructions are intended as a general guide and do not supersede local or national codes in any way. Consult authorities having jurisdiction before installation.

Compliance with all local, state, or national codes pertaining to this type of equipment should be determined prior to installation. Read this instruction manual, as well as the instructions supplied in separate equipment, before starting the installation.

In addition to conforming to manufacturer's installation instructions and local municipal building codes, installation of Lennox air handler units (with or without optional electric heat), MUST conform with National Fire Protection Association (NFPA) standards: "Standard for Installation of Air Conditioning and Ventilation Systems" (NFPA No. 90A) and "Standard for Installation of Residence Type Warm Air Heating and Air Conditioning Systems" (NFPA No. 90B).

All models are designed for indoor installation only. The installation of the air handler, field wiring, duct system, etc. must conform to the requirements of the National Electrical Code, ANSI/NFPA No. 70 (latest edition) in the United States, and any state laws, and local ordinances (including plumbing or waste water codes).

Local authorities having jurisdiction should be consulted before installation is made. Such applicable regulations or requirements take precedence over the general instructions in this manual.

Install the conditioned air plenum, ducts and air filters (provided) in accordance with NFPA 90B Standard for the Installation of Warm Air Heating and Air-Conditioning Systems (latest edition).

The air handler is shipped from the factory completely assembled. The unit is provided with flanges for the connection of the duct system.

Do not remove the cabinet knockouts until it has been determined which knockouts will need to be removed for the installation.

Select the air discharge position which best suits the site conditions. Consider required clearances, space, routing requirements for refrigerant line, condensate disposal, filters, duct system, wiring, and accessibility for service. Refer to the rating plate on the air handler for specific information.

⚠ WARNING

Danger of explosion. Keep flammable materials and vapors, such as gasoline, away from air handler. Place air handler so that heating elements are at least 18 inches (46 cm) above the floor for a garage installation. Failure to follow these instructions can result in death, explosion, or fire.

⚠ IMPORTANT

Excessive condensation may occur if the unit is installed in a warm, humid place. When the unit is installed in an unconditioned space, apply sealant around electrical wires, refrigerant piping and condensate lines at the point where they enter the cabinet.

This will help prevent air leakage into, and condensation from forming inside of, the air handler, the control box, and on the electrical controls.

Unit Dimensions – Upflow Position

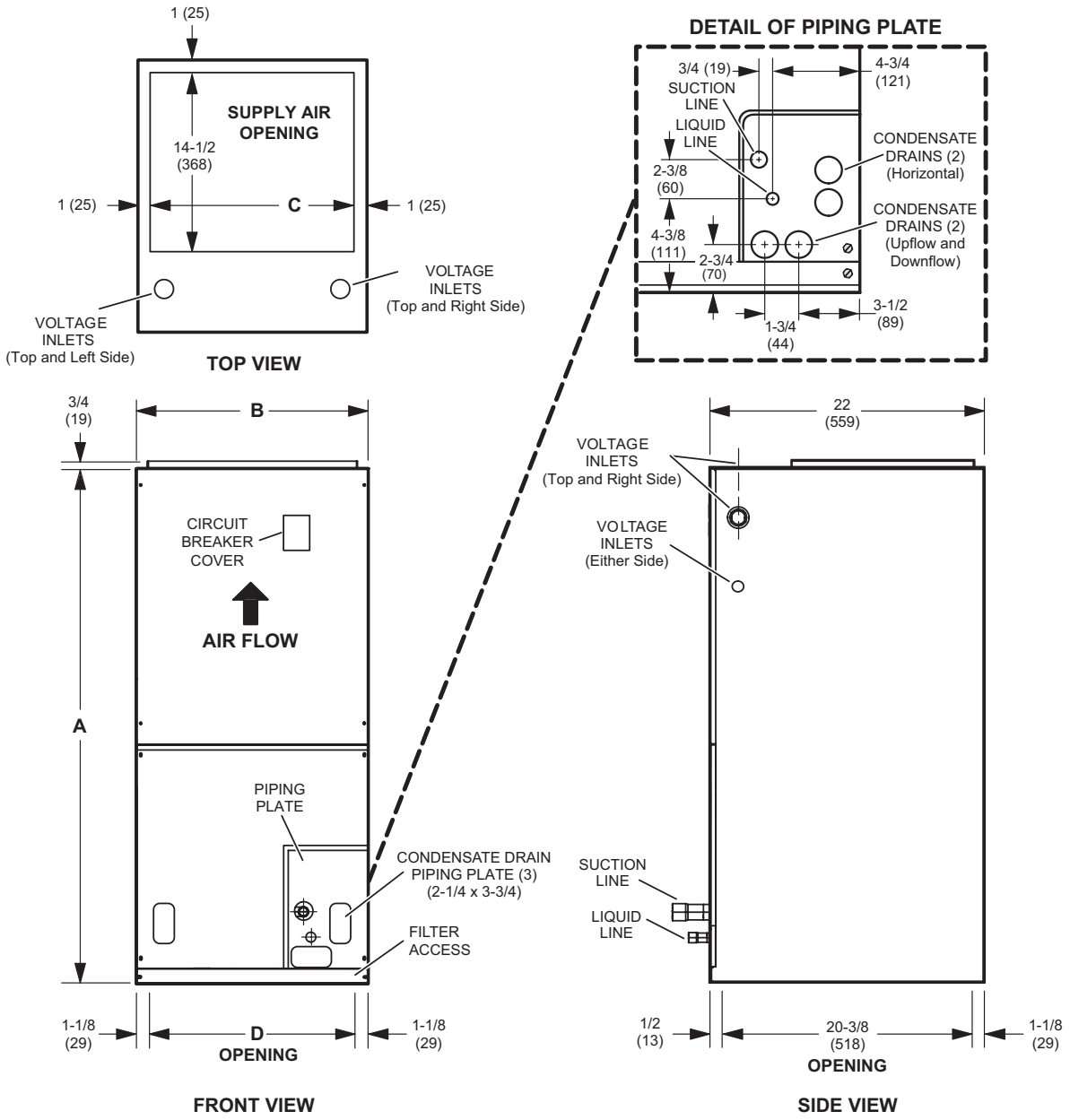

Dimensions	024		030		036, 042		048		060	
	in.	mm	in.	mm	in.	mm	in.	mm	in.	mm
A	45-1/2	1156	47	1194	53-5/8	1362	55	1397	59-3/4	1518
B	18-1/2	470	18-1/2	470	21-1/2	546	21-1/2	546	21-1/2	546
C	16-1/2	419	16-1/2	419	19-1/2	495	19-1/2	495	19-1/2	495
D	16-1/4	413	16-1/4	413	19-1/4	489	19-1/4	489	19-1/4	489

Unit Dimensions – Horizontal Position

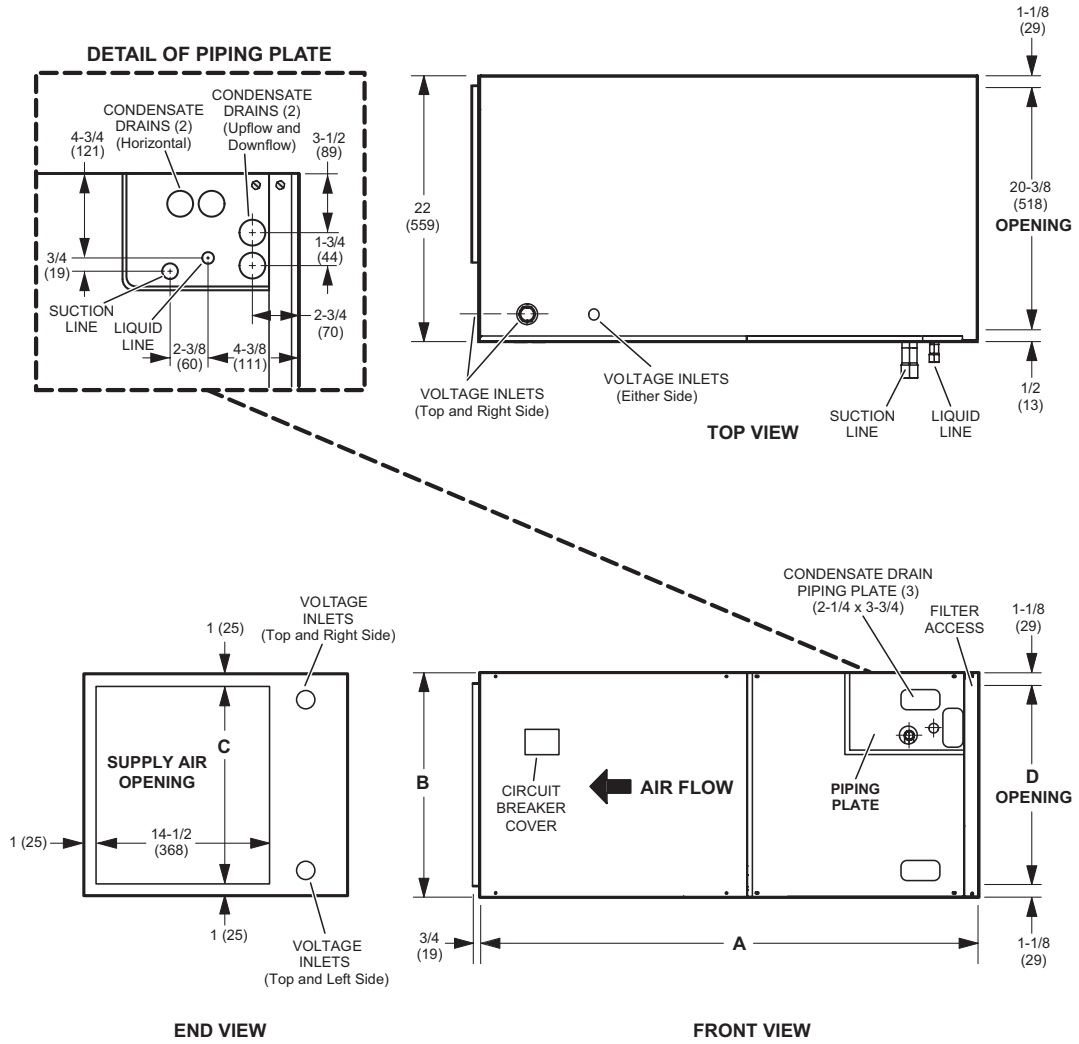

Dimensions	024		030		036, 042		048		060	
	in.	mm	in.	mm	in.	mm	in.	mm	in.	mm
A	45-1/2	1156	47	1194	53-5/8	1362	55	1397	59-3/4	1518
B	18-1/2	470	18-1/2	470	21-1/2	546	21-1/2	546	21-1/2	546
C	16-1/2	419	16-1/2	419	19-1/2	495	19-1/2	495	19-1/2	495
D	16-1/4	413	16-1/4	413	19-1/4	489	19-1/4	489	19-1/4	489

Check-out Procedures

NOTE – *Refer to outdoor unit installation instructions for system start-up instructions and refrigerant charging instructions.*

PRE-START-UP CHECKS

- Is the air handler properly and securely installed?
- If horizontally configured, is the unit sloped up to 5/8 inch toward drain lines?
- Will the unit be accessible for servicing?
- Has an auxiliary pan been provided under the unit with separate drain for units installed above a finished ceiling or in any installation where condensate overflow could cause damage?
- Have ALL unused drain pan ports been properly plugged?
- Has the condensate line been properly sized, run, trapped, pitched, and tested?
- Is the duct system correctly sized, run, sealed, and insulated?
- Have all cabinet openings and wiring been sealed?
- Is the indoor coil factory-installed TXV properly sized for the outdoor unit being used?
- Have all unused parts and packaging been disposed of?
- Is the filter clean, in place, and of adequate size?
- Is the wiring neat, correct, and in accordance with the wiring diagram?
- Is the unit properly grounded and protected (fused)?
- Is the thermostat correctly wired and in a good location?
- Are all access panels in place and secure?

CHECK BLOWER OPERATION

- Set thermostat to FAN ON.
- The indoor blower should come on.

CHECK COOLING OPERATION

- Set thermostat to force a call for cooling (approximately 5ºF lower than the indoor ambient temperature).
- The outdoor unit should come on immediately and the indoor blower should start between 30 - 60 seconds later.
- Check the air flow from a register to confirm that the system is moving cooled air.
- Set the thermostat 5ºF higher than the indoor temperature. The indoor blower and outdoor unit should cycle off.

CHECK ELECTRIC HEAT (IF USED)

- Set thermostat to call for auxiliary heat (approximately 5°F above ambient temperature). The indoor blower and auxiliary heat should come on together. Allow a minimum of 3 minutes for all sequencers to cycle on.
- Set the thermostat so that it does not call for heat. Allow up to 5 minutes for all sequencers to cycle off.

Operation

Cooling (Cooling Only or Heat Pump)

On all models, the 24 volt line will go directly to the terminal board from the transformer. The normally open contacts close, causing the indoor blower motor to operate; depending on the indoor blower motor, there may be a delay. The circuit between R and Y is completed, closing the circuit to the contactor in the outdoor unit, starting the compressor and outdoor fan motor.

On heat pumps, circuit R and O energizes the reversing valve, switching the valve to the cooling position. (The reversing valve remains energized as long as the thermostat selector switch is in the COOL position.)

At the completion of the cooling demand, the indoor blower and outdoor unit should cycle off. Air handler should cycle off 45 seconds after the outdoor unit shuts off.

Heating (Electric Heat Only)

When the thermostat calls for heat, the circuit between R and W is completed, and the heat sequencer is energized. A time delay follows before the heating elements and the indoor blower motor come on. Units with a second heat sequencer can be connected with the first sequencer to W on the thermostat sub-base, or they may also be connected to a second stage on the sub-base.

Heating (Heat Pump)

On all models, the 24 volt line will go directly to the terminal board from the transformer. The normally open contacts close, causing the indoor blower motor to operate; depending on the indoor blower motor, there may be a delay. The circuit between R and Y is completed, closing the circuit to the contactor in the outdoor unit, starting the compressor and outdoor fan motor.

If the room temperature continues to decrease, the circuit between R and W1 is completed by the second-stage heat room thermostat. Circuit R-W1 energizes a heat sequencer. The completed circuit will energize supplemental electric heat (if applicable).

Units with a second heat sequencer can be connected with the first sequencer to W1 on the thermostat. They may also be connected to a second heating stage W2 on the thermostat sub-base.

Emergency Heat (Heating Heat Pump)

If the selector switch on the thermostat is set to the emergency heat position, the heat pump will be locked out of the heating circuit, and all heating will be electric heat (if applicable). A jumper should be placed between W2 and E on the thermostat sub-base so that the electric heat control will transfer to the first-stage heat on the thermostat. This will allow the indoor blower to cycle on and off with the electric heat when the fan switch is in the AUTO position.

Installation Clearances

NON-DUCTED RETURN CLOSET INSTALLATION

The air handler can be installed in a closet with a false bottom to form a return air plenum. It may also be installed with a return air plenum under the air handler.

Louvers or return air grilles are field-supplied. Local codes may limit application of systems without a ducted return to single-story buildings.

When a CBA25UHE unit is installed in a closet with a louvered return opening, the minimum open area for the louvers will be:

- 320 square inches for -024 models;
- 360 square inches for -030 and -036 models;
- 450 square inches for -042 thru -060 models

If the free area is not known, assume a 25% free area for wood or a 75% free area for metal louvers or grilles. Using the louver dimensions and the 25% or 75% assumption, determine if the open area meets the minimum open area listed above.

If a return air plenum is used, the return air grille should be immediately in front of the opening in the plenum to allow for the free flow of return air. When not installed in front of the opening, there must be adequate clearance around the air handler to allow for the free flow of return air.

Installation

Each unit consists of a blower assembly, refrigerant coil, and controls in an insulated galvanized steel factory-finished enclosure. Knockouts are provided for electrical wiring entrance.

For ease in installation, it is best to make any necessary coil configuration changes before setting air handler in place.

REFRIGERANT METERING DEVICE

CBA25UHE units are equipped with a factory-installed check/ expansion valve.

UPFLOW APPLICATION

1 - The air handler must be supported on the bottom only and set on solid floor or field-supplied support frame. Securely attach the air handler to the floor or support frame.

2 - If installing a unit in an upflow application, remove the horizontal drain pan. **IMPORTANT - The horizontal drain pan is not required in upflow air discharge installations; its removal provides the best efficiency and air flow.**

3 - Place the unit in the desired location and slope unit. Connect return and supply air plenums as required using sheet metal screws.

4 - Install units that have no return air plenum on a stand that is at least 14" from the floor. This will allow proper air return.

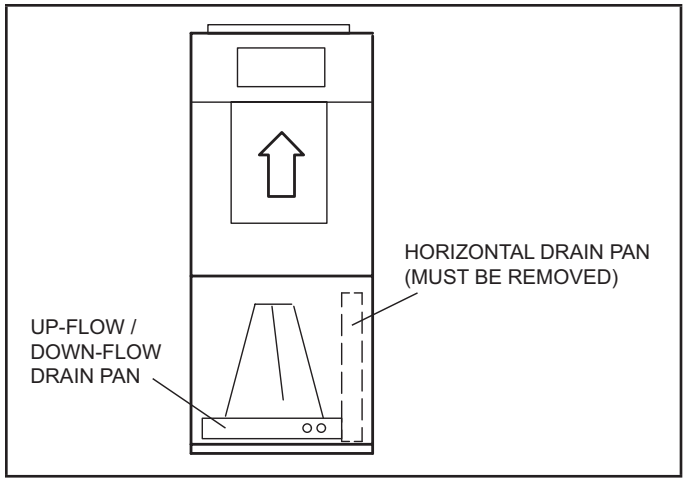

FIGURE 7. Upflow Configuration

HORIZONTAL APPLICATIONS

⚠ IMPORTANT

When removing the coil, there is a possibility of danger of equipment damage and personal injury. Be careful when removing the coil assembly from a unit installed in right- or left-hand applications. The coil may tip into the drain pan once it is clear of the cabinet. Support the coil when removing it.

NOTE *- When the unit is installed in horizontal applications, a secondary drain pan is recommended. Refer to local codes.*

NOTE *- This unit may be installed in left-hand or right-hand air discharge horizontal applications. Adequate support must be provided to ensure cabinet integrity. Ensure that there is adequate room to remove service and access panels if installing in the horizontal position.*

RIGHT-HAND DISCHARGE

1 - Determine which plugs are required for drain line connections.

2 - With access door removed, remove drain line plugs to install drain lines.

3 - Set unit so that it is sloped toward the upflow drain pan end of the unit and level from front to back of unit (see figure 14).

4 - The horizontal configuration is shown in figure 8.

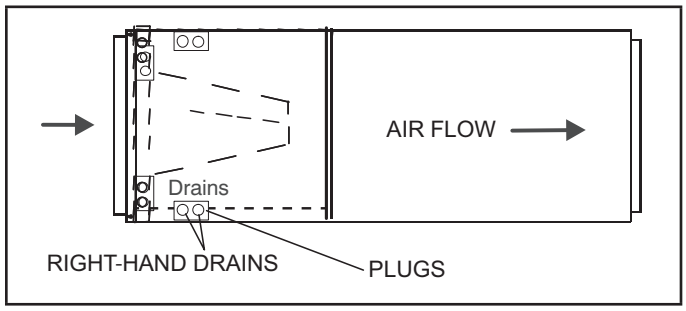

FIGURE 8. Right-Hand Discharge Configuration

5 - If the unit is suspended, the entire length of the cabinet must be supported. If you use a chain or strap, use a piece of angle iron or sheet metal attached to the unit (either above or below) to support the length of the cabinet. Use securing screws no longer than 1/2 inch to avoid damaging the coil or filter. See figure 9. Use sheet metal screws to connect the return and supply air plenums as required.

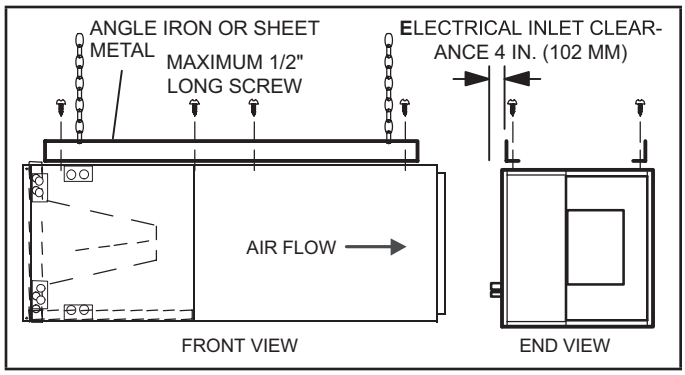

FIGURE 9. Suspending Horizontal Unit

LEFT-HAND AIR DISCHARGE

For horizontal left-hand air discharge, the following field modifications are required. Reference sticker on coil top plate.

1 - Remove access panels and the corrugated padding between the blower and coil assembly. Discard the corrugated padding.

2 - Pull the coil assembly from unit. Pull off the horizontal drain pan.

3 - Remove the drain plugs from back drain holes on horizontal drain pan and reinstall them on front holes.

⚠ IMPORTANT

After removal of drain pan plug(s), check drain hole(s) to verify that drain opening is fully open and free of any debris. Also check to make sure that no debris has fallen into the drain pan during installation that may plug up the drain opening.

4 - Rotate drain pan 180º front-to-back and install it on the opposite side of the coil.

5 - Remove screws from top cap.

6 - Remove plastic plug from left hole on coil front end seal and reinstall plug in back hole.

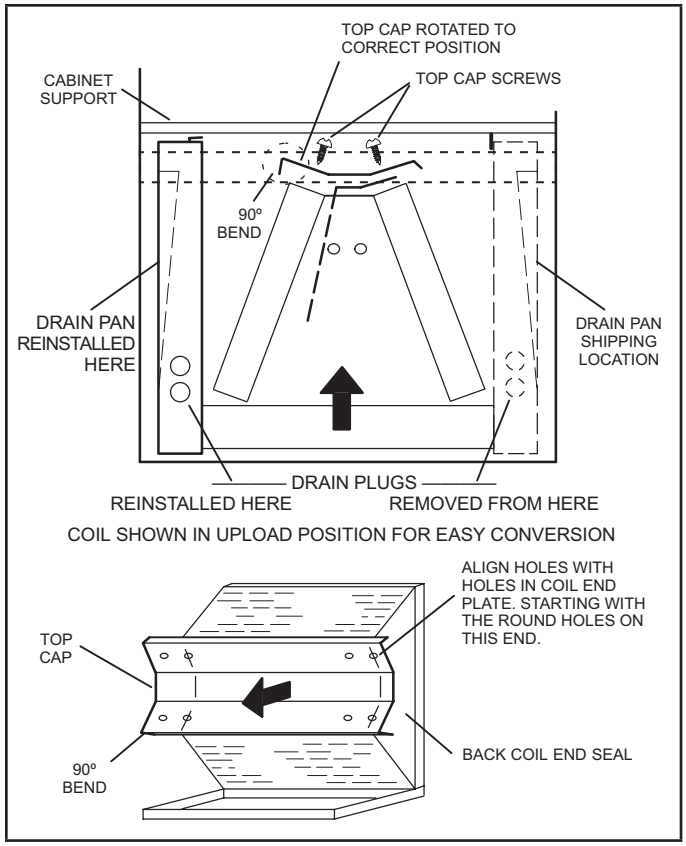

FIGURE 10. Field Modification for Left-Hand Discharge

7 - Rotate top cap 180º front-to-back and align with unused screw holes. Holes must align with front and back coil end plates. The top cap has a 45º bend on one side and a 90º bend on the other. **The 90º bend must be on the same side as the horizontal drain pan** as illustrated in figure 10.

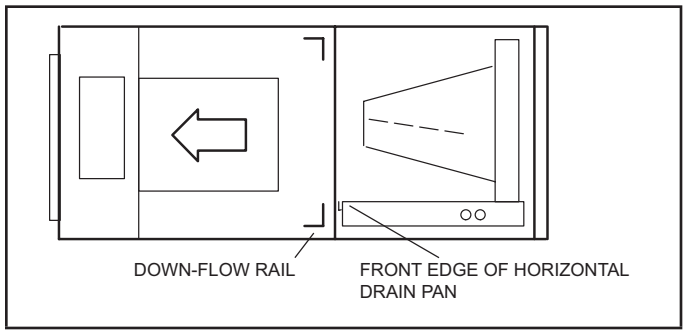

FIGURE 11. Left-Hand Discharge Configuration

NOTE – *Be very careful when reinstalling the screws into the coil end plate engaging holes. Misaligned screws may damage the coil.*

8 - From the upflow position, flip cabinet 90º to the left and set into place. Replace blower assembly. Secure coil in place by bending down the tab on the cabinet support rail as illustrated.

9 - Install the horizontal shield (-060 model) on the front edge of the horizontal drain pan as illustrated in figure 10.

10 - Knock out drain seal plate from access door. Secure plate to cabinet front flange with screw provided.

11 - Flip access door and replace it on the unit.

12 - Set unit so that it is sloped 1/4" toward the drain pan end of the unit. Connect return and supply air plenums as required using sheet metal screws.

13 - If suspending the unit, it must be supported along the entire length of the cabinet. If using chain or strap, use a piece of angle iron or sheet metal attached to the unit (either above or below) so that the full length of the cabinet is supported. Use securing screws no longer than 1/2" to avoid damage to coil or filter, as illustrated in figure 9. Connect return and supply air plenums as required using sheet metal screws.

DOWNFLOW APPLICATION

NOTE – *If downflow application is required, separately order kit number Y9658 (-024 through -030) or Y9659 (-036 through -060) and install per kit's instructions. Also use metal or class I supply and return air plenums.*

Use the installation instruction provided with the downflow kit.

⚠ IMPORTANT

If electric heat section with circuit breakers (ECB25) is installed in a CBA25UHE unit in a downflow application, the circuit breakers must be rotated 180° to the UP position. See ECB25 installation instructions for more details.

Condensate Drain

⚠ IMPORTANT

On units of this type, where the blower "draws" rather than "blows" air through the coil, traps must be installed in the condensate drain lines (primary and auxiliary, if used). Traps prevent the blower from drawing air through the drain lines into the air supply.

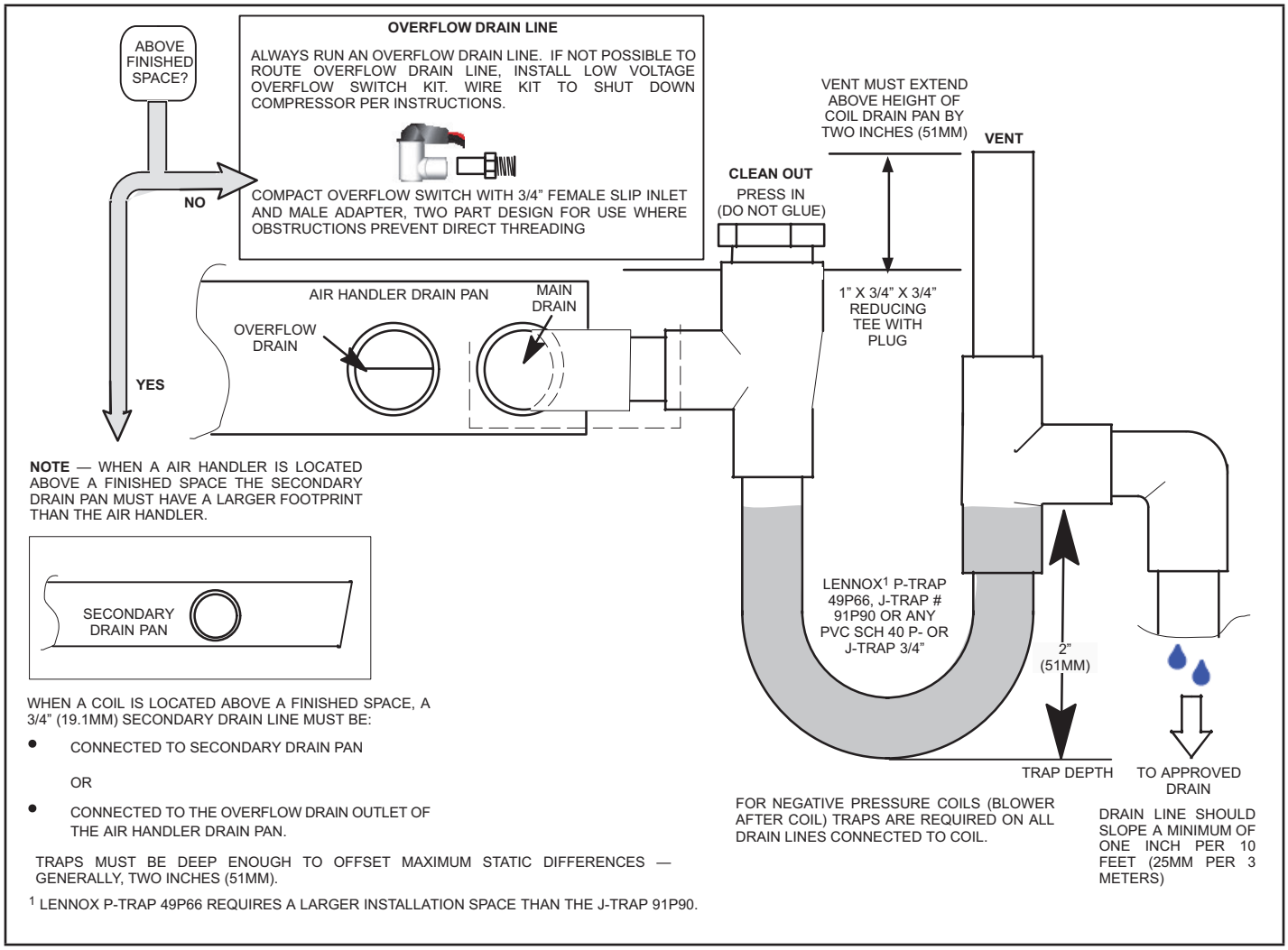

FIGURE 12. Typical Main and Overflow Drain

⚠ IMPORTANT

A field-fabricated secondary drain pan, with a drain pipe to the outside of the building, is required in all installations over a finished living space or in any area that may be damaged by overflow from the main drain pan. In some localities, local codes may require a secondary drain pan for any horizontal installation.

SLOPING THE UNIT

Make sure the unit is sloped (similar to the slope shown in figure 14) so that the drain pan will empty completely without water standing in the pan.

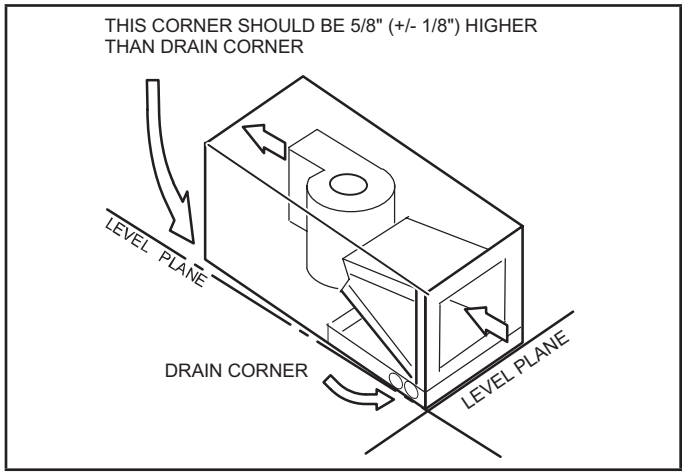

FIGURE 13. Sloping the Unit for Proper Drainage

INSTALL CONDENSATE DRAIN

The air handler is provided with 3/4" NPT condensate drain connections.

⚠ IMPORTANT

Confirm primary and secondary drains are open.

1 - CBA25UHE units are equipped with a drain pan, which includes green (main drain) and red (secondary drain) plugs. Unscrew the plugs to remove them before inserting condensate drain fittings.

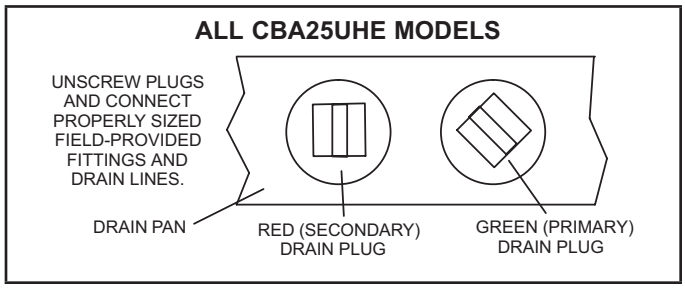

FIGURE 14. Drain Line Connections

2 - Install properly sized, field-provided connection fittings and connect primary drain line to the main drain pan connection.

***NOTE** - When installing drain line connection fittings to the drain pan, hand tighten the fitting and use a thread sealant. Over-tightening the fittings can split connections on the drain pan.*

3 - If the secondary drain line is to be used, remove the plug or the knockout and route the drain line so that water draining from the outlet will be easily noticed by the homeowner. Refer to local codes for drain trap requirements on the secondary drain line.

4 - Check again to ensure drain ports and drain pan are free of all debris.

5 - Plug and check any unused drain pan openings for tightness. Torque plugs to 30 in. lb. to prevent water leaks or seepage from the drain pan.

6 - Install a 2" trap in the main (primary) drain lines as close to the unit as practical (see figure 12). Make sure the top of the trap is below the connection to the drain pan to allow complete drainage of the pan.

***NOTE** - Horizontal runs must have an anti-siphon air vent (standpipe) installed ahead of the horizontal run. See figure 6. An extremely long horizontal run may require an oversized drain line to eliminate air traps.*

***NOTE** - Do not operate air handler without a trap in the main (primary) drain. The condensate drain is on the negative pressure side of the blower; therefore, air being pulled through the condensate line will not allow positive drainage without a proper trap.*

7 - Route the drain line to the outside or to an appropriate drain. Drain lines must be installed so they do not block service access to the front of the air handler. A 24" clearance is required for filter, coil, or blower removal and service access.

***NOTE** - Check local codes before connecting the drain line to an existing drainage system. Insulate the drain lines where sweating could cause water damage.*

TEST CONDENSATE DRAIN

Test the drain pan and drain line after installation:

1 - Pour several quarts of water into drain pan. Use enough water to fill both the drain trap and the line.

2 - Check the installed drain pan. Drain pan must be draining completely. Drain line fittings must not be leaking. Water must be draining from the end of the primary drain line.

3 - Correct any leaks found.

Duct System and Filters

DUCT SYSTEM

The air handler is provided with flanges for the connection of the supply plenum.

Supply and return duct system must be adequately sized to meet the system's air requirements and static pressure capabilities. The duct system should be insulated with a minimum of 1" thick insulation with a vapor barrier in conditioned areas or 2" minimum in unconditioned areas.

Supply plenum should be the same size as the flanged opening provided around the blower outlet and should extend at least 3 ft. from the air handler before turning or branching off plenum into duct runs. The plenum forms an extension of the blower housing and minimizes air expansion losses from the blower.

FILTERS

A filter is provided. Table 2 lists the filter size for each unit.

TABLE 2. Unit Air Filter Size Chart

CBA25UHE	Filter Size – In.
-024, -030	15" x 20" x 1"
-036, -042, -048, -060	18" x 20" x 1"

⚠ IMPORTANT

If a high efficiency filter is being installed as part of this system to ensure better indoor air quality, the filter must be properly sized. High efficiency filters have a higher static pressure drop than standard efficiency glass/foam filters. If the pressure drop is too great, system capacity and performance may be reduced. Before using any filter with this system, check the specifications provided by the filter manufacturer against the data given in the appropriate Lennox Product Specifications bulletin. Additional information is provided in Service and Application Note ACC002 (August 2000)..

INSTALLING DUCT SYSTEM

Connect supply air duct to the flange on top of the air handler. If an isolation connector is used, it must be nonflammable.

FIELD-FABRICATED RETURN AIR DUCT FLANGE FOR HORIZONTAL APPLICATIONS

A return air duct system is recommended, but not factory-provided. If the unit is installed in a confined space or closet, run a full-size return connection to a location outside the closet.

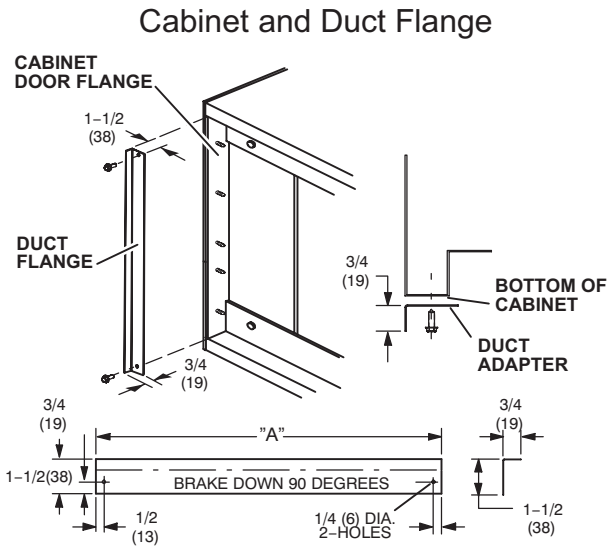

UNIT SIZE	"A"
-024, -030	18-3/8"
-036, -042 -048, -060	21-1/2"

FIGURE 15. Cabinet and Duct Flange

Brazing Refrigerant Lines

Refrigerant lines must be connected by a qualified technician in accordance with established procedures.

⚠ IMPORTANT

Refrigerant lines must be clean, dry, refrigerant-grade copper lines. Air handler coils should be installed only with specified line sizes for approved system combinations.

Handle the refrigerant lines gently during the installation process. Sharp bends or kinks in the lines will cause a restriction.

Do not remove the caps from the lines or system connection points until connections are ready to be completed.

⚠ WARNING

Polyol ester (POE) oils used with HFC-410A refrigerant absorb moisture very quickly. It is very important that the refrigerant system be kept closed as much as possible. DO NOT remove line set caps or service valve stub caps until you are ready to make connections.

⚠ WARNING

Danger of fire. Bleeding the refrigerant charge from only the high side may result in pressurization of the low side shell and suction tubing. Application of a brazing torch to a pressurized system may result in ignition of the refrigerant and oil mixture. Check the high and low pressures before applying heat.

⚠ WARNING

When using a high pressure gas such as nitrogen to pressurize a refrigeration or air conditioning system, use a regulator that can control the pressure down to 1 or 2 psig (6.9 to 13.8 kPa).

⚠ CAUTION

Brazing alloys and flux contain materials which are hazardous to your health.

Avoid breathing vapors or fumes from brazing operations. Perform operations only in well-ventilated areas.

Wear gloves and protective goggles or face shield to protect against burns.

Wash hands with soap and water after handling brazing alloys and flux.

⚠ IMPORTANT

To prevent the build-up of high levels of nitrogen when purging, it must be done in a well-ventilated area. Purge low-pressure nitrogen (1 to 2 psig) through the refrigerant piping during brazing. This will help to prevent oxidation and the introduction of moisture into the system.

Refrigerant system installations shall be installed and tested per ASHRAE Standard 15.2, Section 10.0 (latest edition).

NOTE *- When installing refrigerant lines longer than 50 feet, see the Lennox Refrigerant Piping Design and Fabrication Guidelines, CORP. 9351-L9, or contact Lennox Technical Support Product Applications for assistance. To obtain the correct information from Lennox, be sure to communicate the following information: Model and capacity.*

1 - Route the suction and liquid lines from the fittings on the indoor coil to the fittings on the outdoor unit. Run the lines in a direct path, avoiding unnecessary turns and bends.

2 - Make sure that the suction line is insulated over the entire exposed length and that neither suction nor liquid lines are in direct contact with floors, walls, duct system, floor joists, or other piping.

3 - To avoid damaging the rubber grommets in the cabinet while brazing, slide the rubber grommets over the refrigerant lines until they are away from the heat source.

NOTE *- Place wet rags against piping plate, piping stubs and expansion valve.*

4 - Connect the suction and liquid lines to the evaporator coil. Take care to protect the cabinet and internal components as detailed in figure 17.

5 - Braze using an alloy of silver or copper and phosphorus with a melting point above 1,100°F (593°C).

NOTE *- Do not use soft solder.*

6 - Allow refrigerant pipes to cool to room temperature.

NOTE *- Make sure to route copper refrigerant tubing away from sharp edges and make sure that it does not touch other metal surfaces. This prevents damage caused by vibration or metal-on-metal contact*.

7 - Reinstall the rubber grommets into the refrigerant piping panel.

NOTE *- Make sure expansion valve capillary tube is not touching metal edges or copper tubing.*

8 - Make sure outdoor unit has been placed according to the Installation Instructions and is connected to the refrigerant lines

PLEASE READ IMPORTANT ISSUES CONCERNING BRAZING OPERATIONS ON PREVIOUS PAGES BEFORE PROCEEDING.

NOTE - *REFER TO OUTDOOR UNIT INSTALLATION INSTRUCTIONS FOR REFRIGERANT PIPING SIZE REQUIREMENTS.*

NOTE - *Use silver alloy brazing rods with five or six percent minimum silver alloy for copper-to-copper brazing, 45 percent alloy for copper-to-brass and copper-to-steel brazing.*

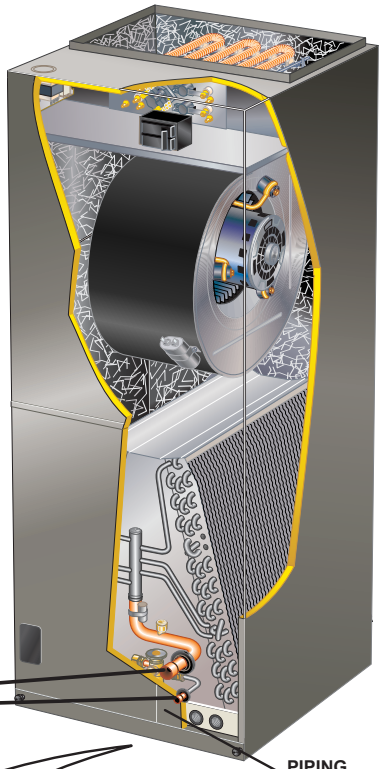

A REMOVE ACCESS PANEL

B REMOVE RUBBER PLUG FROM BOTH LIQUID AND SUCTION LINES
NOTE - *CBA25 SERIES UNITS USE NITROGEN OR DRY AIR AS A HOLDING CHARGE. IF THERE IS NO PRESSURE WHEN THE RUBBER PLUGS ARE REMOVED, CHECK THE COIL FOR LEAKS BEFORE INSTALLING.*

C EITHER REMOVE OR PUSH PIPE WRAPPING BACK THROUGH HOLE IN PIPING PLATE BEFORE LINE SET CONNECTION AND BRAZING.

D CONNECT PIPES
NOTE - *REFRIGERANT LINE SETS SHOULD BE ROUTED TO ALLOW FILTER ACCESSIBILITY.*

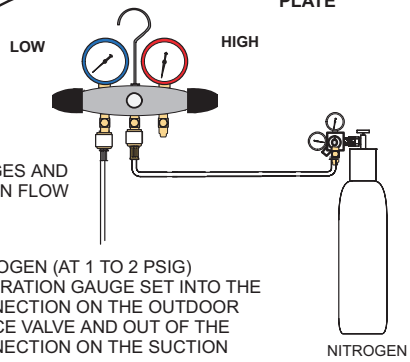

E CONNECT GAUGES AND START NITROGEN FLOW

FLOW REGULATED NITROGEN (AT 1 TO 2 PSIG) THROUGH THE REFRIGERATION GAUGE SET INTO THE VALVE STEM PORT CONNECTION ON THE OUTDOOR UNIT LIQUID LINE SERVICE VALVE AND OUT OF THE VALVE STEM PORT CONNECTION ON THE SUCTION SERVICE VALVE.

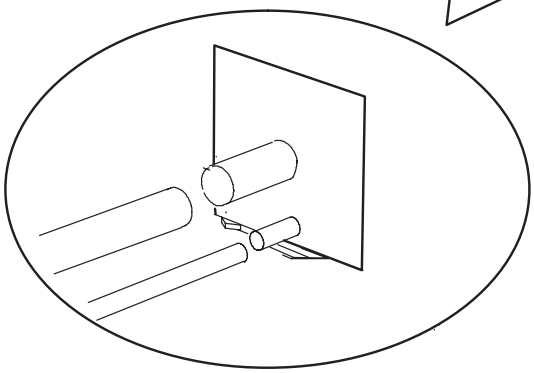

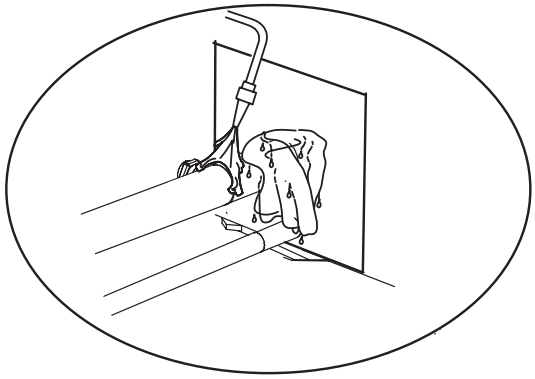

F PLACE A WET RAG AGAINST PIPING PLATE AND AROUND THE SUCTION LINE CONNECTION.

G BRAZE CONNECTION. ALLOW PIPE TO COOL BEFORE REMOVING WET RAG FROM CTXV SENSING BULB AND PIPING PANEL AREA.

H REPEAT PREVIOUS PROCEDURE FOR LIQUID LINE.

REFER TO INSTRUCTIONS PROVIDED WITH OUTDOOR UNIT FOR LEAK TESTING, EVACUATING AND CHARGING PROCEDURES.
REFRIGERANT SYSTEM INSTALLATIONS SHALL BE INSTALLED AND TESTED PER ASHRAE STANDARD 15.2, SECTION 10.0 (LATEST EDITION).

FIGURE 16. Brazing Connections

Sealing the Unit

Seal the unit so that warm air is not allowed into the cabinet. Warm air introduces moisture, which results in water blow-off problems. This is especially important when the unit is installed in an unconditioned area.

If installed in an unconditioned space, sealant should be applied around the electrical wires, refrigerant tubing, and condensate lines where they enter the cabinet.

⚠ WARNING

There must be an airtight seal between the bottom of the air handler and the return air plenum. Use fiberglass sealing strips, caulking, or equivalent sealing method between the plenum and the air handler cabinet to ensure a tight seal. Return air must not be drawn from a room where this air handler or any gas-fueled appliance (i.e., water heater), or carbon monoxide-producing device (i.e., wood fireplace) is installed.

⚠ IMPORTANT

Use duct tape and/ or Permagum to seal closed any space around the holes where the drain lines exit the cabinet. Warm air must not be allowed to enter through any gaps or holes in the cabinet.

Homeowner Maintenance

⚠ IMPORTANT

Do not operate system without a filter. A filter is required to protect the coil, blower, and internal parts from excessive dirt and dust. The filter is placed in the return duct by the installer.

- Inspect air filters at least once a month and replace or clean as required. Dirty filters are the most common cause of inadequate heating or cooling performance.
- Replace disposable filters. Cleanable filters can be cleaned by soaking in mild detergent and rinsing with cold water.
- Install new/clean filters with the arrows on the side pointing in the direction of air flow. Do not replace a cleanable (high velocity) filter with a disposable (low velocity) filter unless return air system is properly sized for it.
- If water should start coming from the secondary drain line, a problem exists which should be investigated and corrected. Contact a qualified service technician.

Repairing or Replacing Cabinet Insulation

⚠ IMPORTANT

DAMAGED INSULATION MUST BE REPAIRED OR REPLACED before the unit is put back into operation. Insulation loses its insulating value when wet, damaged, separated or torn.

Matte- or foil-faced insulation is installed in indoor equipment to provide a barrier between outside air conditions (surrounding ambient temperature and humidity) and the varying conditions inside the unit. If the insulation barrier is damaged (wet, ripped, torn or separated from the cabinet walls), the surrounding ambient air will affect the inside surface temperature of the cabinet.

The temperature/humidity difference between the inside and outside of the cabinet can cause condensation on the inside or outside of the cabinet which leads to sheet metal corrosion and, subsequently, component failure.

REPAIRING DAMAGED INSULATION

Areas of condensation on the cabinet surface are an indication that the insulation is in need of repair.

If the insulation in need of repair is otherwise in good condition, the insulation should be cut in an X pattern, peeled open, glued with an appropriate all-purpose glue and placed back against the cabinet surface, being careful to not overly compress the insulation so the insulation can retain its original thickness. If such repair is not possible, replace the insulation. If using foil-faced insulation, any cut, tear, or separations in the insulation surface must be taped with a similar foil-faced tape.

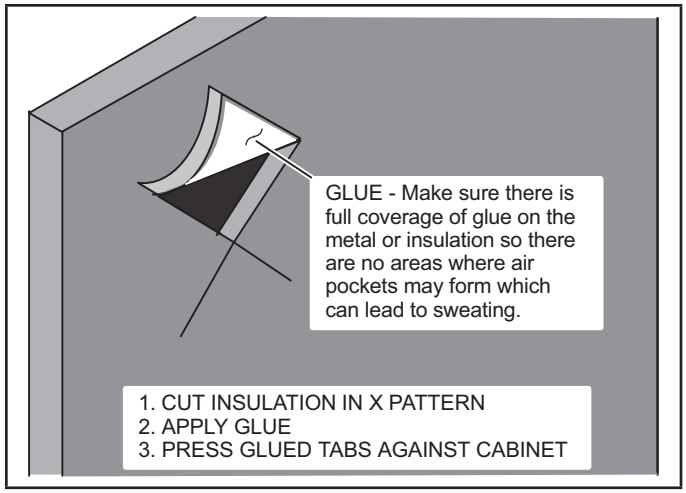

FIGURE 17. Repairing Insulation

Professional Maintenance

NOTICE !

Failure to follow instructions will cause damage to the unit.

This unit is equipped with an aluminum coil. Aluminum coils may be damaged by exposure to solutions with a pH below 5 or above 9. The aluminum coil should be cleaned using potable water at a moderate pressure (less than 50psi). If the coil cannot be cleaned using water alone, Lennox recommends use of a coil cleaner with a pH in the range of 5 to 9. The coil must be rinsed thoroughly after cleaning.

In coastal areas, the coil should be cleaned with potable water several times per year to avoid corrosive buildup (salt).

Use of Air Handler During Construction

Lennox does not recommend the use of its air handler unit during any phase of construction. Very low return air temperatures, harmful vapors and operation of the unit with clogged or misplaced filters will damage the unit.

Air handler units may be used for heating (heat pumps) or cooling of buildings under construction, if the following conditions are met:

- A room thermostat must control the air handler. The use of fixed jumpers is not allowed.
- Air filter must be installed in the system and must be maintained during construction.
- Air filter must be replaced upon construction completion.
- The air handler evaporator coil, supply fan assembly and duct system must be thoroughly cleaned following final construction clean-up.
- All air handler operating conditions must be verified according to these installation instructions.

Decommissioning

Before carrying out this procedure, it is essential that the technician is completely familiar with the equipment and all its detail. It is recommended good practice that all refrigerants are recovered safely.

Prior to the task being carried out, an oil and refrigerant sample shall be taken in case analysis is required prior to re-use of recovered refrigerant. It is essential that electrical power is available before starting decommissioning.

a) Become familiar with the equipment and its operation.

b) Isolate system electrically.

c) Before attempting the procedure, ensure that:

- mechanical handling equipment is available, if required, for handling refrigerant cylinders;
- all personal protective equipment is available and being used correctly;
- the recovery process is supervised at all times by a competent person;
- recovery equipment and cylinders conform to the appropriate standards.

d) Pump down refrigerant system, if possible.

e) If a vacuum is not possible, make a manifold so that refrigerant can be removed from various parts of the system.

f) Make sure that cylinder is situated on the scales before recovery takes place.

g) Start the recovery machine and operate in accordance with instructions.

h) Do not overfill cylinders (no more than 80% volume liquid charge).

i) Do not exceed the maximum working pressure of the cylinder, even temporarily.

j) When the cylinders have been filled correctly and the process completed, make sure that the cylinders and the equipment are removed from site promptly and all isolation valves on the equipment are closed off.

k) Recovered refrigerant shall not be charged into another REFRIGERATING SYSTEM unless it has been cleaned and checked.

Installing Contractor's Name_____ Installing Date_____

Installing Contractor's Phone_____ Air Handler Model #_____

Job Address_____

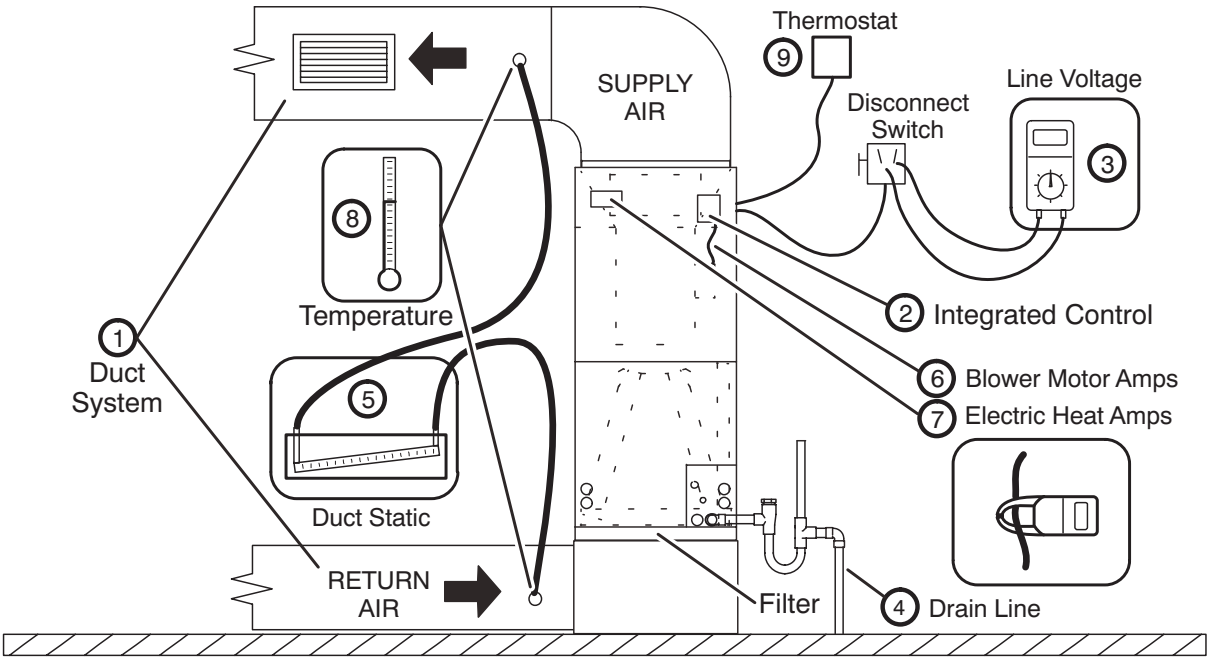

1 DUCT SYSTEM

SUPPLY AIR DUCT

☐ Sealed

☐ Insulated (if necessary)

☐ Registers Open and Unobstructed

RETURN AIR DUCT

☐ Sealed

☐ Filter Installed and Clean

☐ Registers Open and Unobstructed

2 INTEGRATED CONTROL

☐ Jumpers Configured Correctly (if applicable)

☐ Appropriate Links in Place (if applicable)

3 VOLTAGE CHECK

☐ Supply Voltage _____

☐ Low Voltage _____

☐ Electrial Connections Tight

4 DRAIN LINE

☐ Leak Free

5 TOTAL EXTERNAL STATIC (dry coil)

	dry coil	wet coil
Supply External Static	_____	_____
Return External Static	_____	_____
Total External Static =	_____	_____

6 ELECTRIC HEAT AMPS_____

7 INDOOR BLOWER AMPS_____

INDOOR BLOWER CFM_____

8 TEMPERATURE DROP (Cooling Mode)

Return Duct Temperature _____

Supply Duct Temperature – _____

Temperature Drop = _____

8 TEMPERATURE RISE (Heating Mode)

Return Duct Temperature _____

Supply Duct Temperature – _____

Temperature Rise = _____

9 THERMOSTAT

☐ Adjusted and Programmed

☐ Operation Explained to Owner

☐ Explained Operation of System to Homeowner

Technician's Name:_____Date Start–Up & Performance Check Completed_____

FIGURE 18. Start-up and Performance Checklist (Upflow Configuration)

Installing Contractor's Name_____ Installing Date_____

Installing Contractor's Phone_____ Air Handler Model #_____

Job Address_____

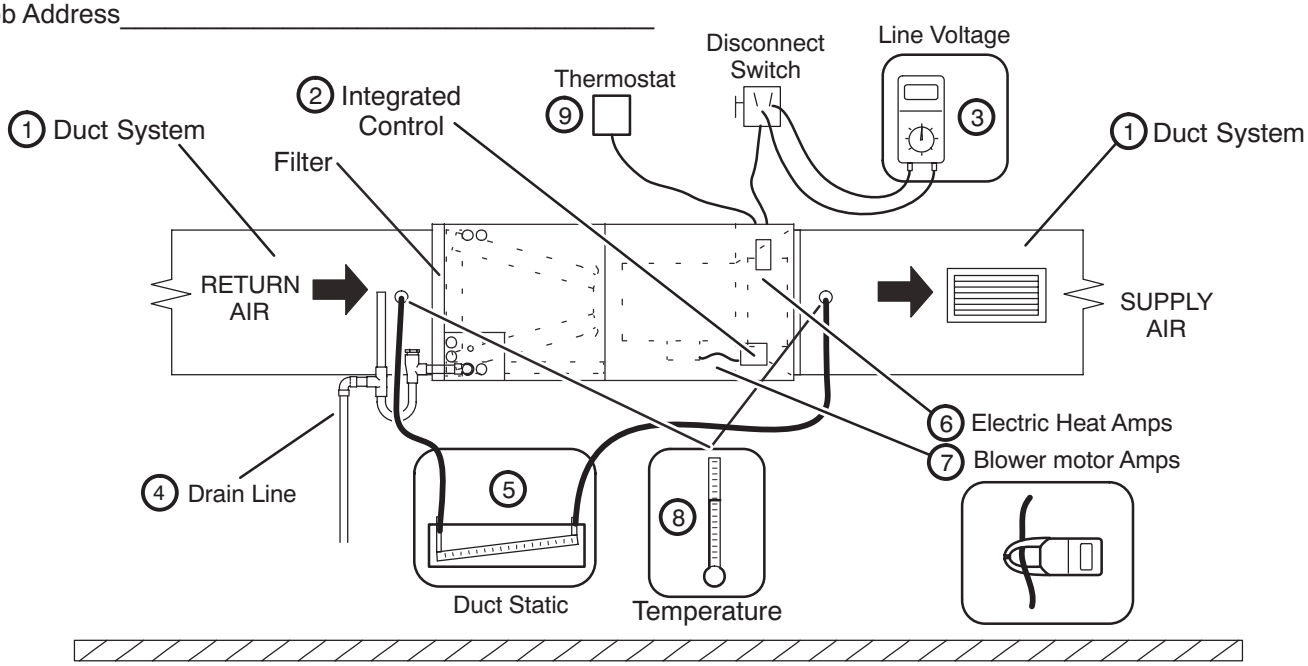

1 DUCT SYSTEM

SUPPLY AIR DUCT

☐ Sealed

☐ Insulated (if necessary)

☐ Registers Open and Unobstructed

RETURN AIR DUCT

☐ Sealed

☐ Filter Installed and Clean

☐ Registers Open and Unobstructed

2 INTEGRATED CONTROL

☐ Jumpers Configured Correctly (if applicable)

☐ Appropriate Links in Place (if applicable)

3 VOLTAGE CHECK

☐ Supply Voltage _____

☐ Low Voltage _____

☐ Electrial Connections Tight

4 DRAIN LINE

☐ Leak Free

5 TOTAL EXTERNAL STATIC (dry coil)

	dry coil	wet coil
Supply External Static	_____	_____
Return External Static	_____	_____
Total External Static =	_____	_____

6 ELECTRIC HEAT AMPS_____

7 INDOOR BLOWER AMPS_____

INDOOR BLOWER CFM_____

8 TEMPERATURE DROP (Cooling Mode)

Return Duct Temperature _____

Supply Duct Temperature – _____

Temperature Drop = _____

8 TEMPERATURE RISE (Heating Mode)

Return Duct Temperature _____

Supply Duct Temperature – _____

Temperature Rise = _____

9 THERMOSTAT

☐ Adjusted and Programmed

☐ Operation Explained to Owner

☐ Explained Operation of System to Homeowner

Technician's Name:_____Date Start–Up & Performance Check Completed_____

FIGURE 19. Start-Up and Performance Checklist (Horizontal Configuration)

PFAS