SIEMENS

Installation Instructions
Document No. 125-1009
February 10, 2020

508055-01
CAT# 24C57
7/2022

RDY2000BN BACnet Enabled Commercial Room Thermostat

Figure 1. RDY2000BN Thermostat.

Product Information

The BACnet Enabled Commercial Room Thermostat is designed for use with any Energy Management System providing BACnet MS/TP communication. Use Commercial Room Thermostat RDY2000BN for stand-alone operations. Scan QR code on thermostat rear housing for additional information.

Product Number

RDY2000BN

Product Specifications

System Compatibility	
Conventional	Up to 3 Heating/3 Cooling stages
Heat Pumps	Up to 4 Heating/2 Cooling stages
Electrical Characteristics	
Power Supply	24 Vac +/-20%, Class 2, 4A max.
Power Usage	4 VA (maximum)
Output Relay Ratings	Pilot duty, 1A max. per output, 4A max. total
MS/TP Load	1/8 (96 KΩ), internal network bias
Ambient Limitations	
Operating Temperature	23°F to 122°F (-5°C to 50°C)
Storage/Shipping Temperature	-13°F to 158°F (-25°C to 70°C)
Relative Humidity	Up to 95% (non-condensing)
Enclosure	
Rating	NEMA 1

NOTE: The RDY2000BN is not battery-powered. It requires 24 Vac power from the HVAC equipment at terminals RH/RC and C.

Caution Notations

CAUTION:	⚠	Equipment damage or loss of data may occur if you do not follow the procedures as specified.
WARNING:	⚠	Personal injury or loss of life may occur if you do not follow the procedures as specified.

Required Tools

- No. 1 Phillips screwdriver
- 1/8” flat-blade screwdriver
- Drill with 1/8" drill bit

Expected Installation Time

15 minutes

⚠ **CAUTION:**

The RDY2000BN is an advanced controller designed to be installed by professional HVAC technicians. Installation by non-qualified personnel may result in degraded system efficiency, occupant discomfort, or equipment damage.

Prerequisites

⚠ **WARNING:**

Turn off power to the HVAC equipment before attempting to remove an existing thermostat or install a new thermostat.

All work must be performed in accordance with the applicable codes and standards.

- Energy Management System Network Plan and HVAC schematics are available.
- MS/TP run to thermostat using 24 AWG Low Capacitance 1.5 Twisted Shielded Pair cable. Shield and reference terminator to be earth grounded only at one point on network.
- HVAC equipment connections run to thermostat with 18 gauge thermostat wires.
- Sensor connections run to thermostat with 22 gauge twisted pair cable or remote sensor wiring. Do not exceed 164 ft (50 m).

Para accede al documento en Español, escanee el código QR que se encuentra en la parte trasera del termostato.

Installation

Refer to Energy Management System Network Plan for MS/TP installation and configuration parameters.

1. Verify power to HVAC equipment is turned off.
2. **Optional:** To replace an existing thermostat:
   a. Remove the existing thermostat.
   b. Record wiring connections to existing thermostat base plate terminals.
   c. Remove the existing base plate.
3. Install the new thermostat base plate.
   a. Feed all installed wires through the opening in base plate and strip to 3/16-inch (5 mm).
   b. Secure the base plate to the mounting surface using supplied hardware.

NOTE: Ensure that the UP arrows embossed on the base plate are pointed upward.

Figure 2. Thermostat Base Plate.

4. Attach the HVAC system wires to appropriate terminals on the thermostat base plate Figure 2.
   a. Verify HVAC equipment schematics for required circuit connections to thermostat *Wiring Diagrams*, Figure 4 and Figure 5.
   b. Verify each 24 Vac transformer secondary neutral is connected to HVAC ground.
   c. If a single transformer is used, leave the Jumper RH-RC in place. Connect 24 Vac to RC terminal, and neutral to terminal C.
   d. If separate transformers are used for heating and cooling systems, remove the Jumper RH-RC. Connect cooling 24 Vac to terminal RC, neutral to terminal C and heating 24 Vac to terminal RH.
   e. Connect control wires to terminals Y1, Y2, O/B, G, W1, W2, OUT1, OUT2, or OUT3.
   f. Connect Sensor wires to terminals IN1, IN2, IN3, or IN4 and adjacent INC common.

   Optional: Auxiliary Output 3 can be changed to a dry (unpowered) contact by removing Jumper RC-C3 and connecting dry contact wires to OUT3 and C3. See *Wiring Diagrams*, Figure 6.

   Optional: If using Configurable Inputs 1 to 4 or Auxiliary Outputs 1 to 3, use setup parameters P301 to P320 to set functionality.
5. Attach MS/TP wire to NET terminals on left of the thermostat base plate Figure 2.

   CAUTION:

   To ensure signal integrity observe MS/TP network wire polarity, reference terminator and shield earth grounded at one location, two end of line terminators, and if required an external network bias device.

   MS/TP devices from some vendors may refer to input A as (-) and input B as (+) or may require external network bias.

   For RDY2000BN, NETA is non-inverting input A (+) internally biased high, NETB is inverting input B (-) internally biased low to REF (↓), and external bias is not required.

   a. Refer to the network plan for MS/TP wire color code used for (+), (-), and (↓).
   b. See Figure 7 for wiring thermostat at the middle of line (two MS/TP cables) or at the end of line (one MS/TP cable).
   c. If thermostat at the middle of line, connect terminals to two MS/TP cables with (+) to NETA, (-) to NETB, and (↓) to REF. Connect shield wires together and insulate.
   d. If thermostat at the end of line, connect terminals to one MS/TP cable and one end of line terminator with (+) and terminator to NETA, (-) and terminator to NETB, and (↓) to REF. Verify shield is connected to earth ground and insulate.
6. Attach thermostat to base plate by engaging tabs at the top and rotating the thermostat downward until securely seated on base plate.
7. Secure the thermostat to the base plate with the Phillips screws (provided), using the holes at the bottom of the housing.
8. Remove thermostat LCD screen cover.
9. **Optional:** store 2nd BACnet Serial Number Label with the BACnet Energy Management System commissioning documents.

The installation is now complete. Restore power, and continue to *Thermostat Setup*.

Thermostat Setup

Figure 3. Thermostat Display.

Thermostat Display

Navigation Bar

Only one function can be selected at a time. The small bar (cursor) below the function icon indicates that a function is selected. Pressing an icon twice navigates back to the Main screen.

A double bar cursor below the **Settings icon** [⚙] indicates that you are in Programming mode.

The navigation bar at the bottom of the display consists of four function icons.

Table 1. Navigation Bar Icons.

Icon	Name	Purpose
	Setpoint	Enables adustment of temperature and humidity (if applicable) setpoints. Unit will display heating setpoint if in Heating mode or cooling setpoint if in Cooling mode.
	Fan Control	Enables fan relay to be controlled as needed by thermostat (AUTO) or to be on continuously (ON).
	Mode Selector	Enables manual changeover between Heating and Cooling mode. AUTO will enable the thermostat to automatically switch between heating and cooling mode as required. OFF will disable all control functions.
	Settings	Enables Scheduler, Time/Date, and Installer Set Up configuration. Also enables access to service reminder and fault messages.

Service Reminders and Fault Messages

- Service reminders appear at the right side of the screen:
  - SERVICE UV LAMP
  - SERVICE HUMIDIFIER
  - SERVICE AIR FILTER

They are determined by the timer set in the Installer Setup Menu, and can be cleared by pressing the **Settings icon** [⚙], and then **SERVICE**. See *Clearing Service Reminders*.

- Active fault messages appear at the left side of the home screen:
  - **`CONNECTION LOST`** (Not applicable to this model)
  - **`DEMAND RESPONSE`** (Not applicable to this model)
  - **`SERVICE REQUIRED`** (See *Viewing Fault Messages*)

Fault messages are automatically cleared when the root cause of the failure is resolved.

Status Bar

The status bar at the top of the display consists of 11 icons.

Table 2. Status Bar Icons.

Icon	Name	Meaning
	Occupied	Space is occupied, based on Schedule and/or Occupancy Sensor.
	Keypad Lock	Keypad is locked.
	Scheduler	Unit is running on the local schedule.
	Override	The Scheduler is being overridden by local control.
	Humidity Control Indicator	Droplet and (+) indicates humidification relay is on. Droplet and (-) indicates dehumidification relay is on. If neither relay is on, the water droplet does not appear.
	Fan	Fan relay is on.
	Fresh Air	Economizer Enable/ Ventilation relay is on.
	Cool Mode	The system is actively in cooling mode.
	Heat Mode	The system is actively in heating mode.
	Heating/Cooling Stages	Each segment represents one stage of heating or cooling.
AUX 2	Auxiliary Heating	Auxiliary heating stage: AUX=Stage 1: Aux 2=Stage 2

Wiring Diagrams

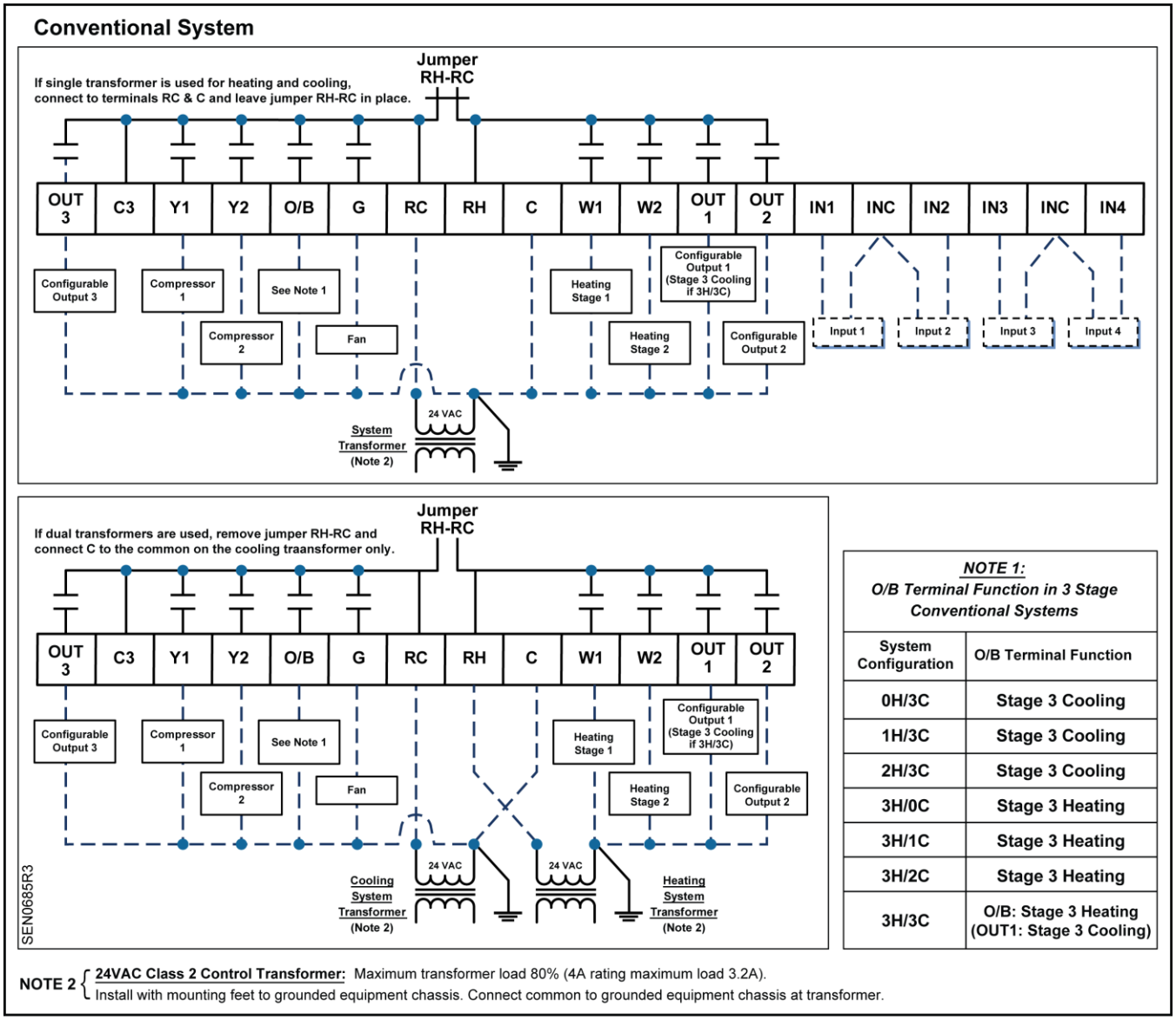

Figure 4. Wiring Schematic, Conventional System.

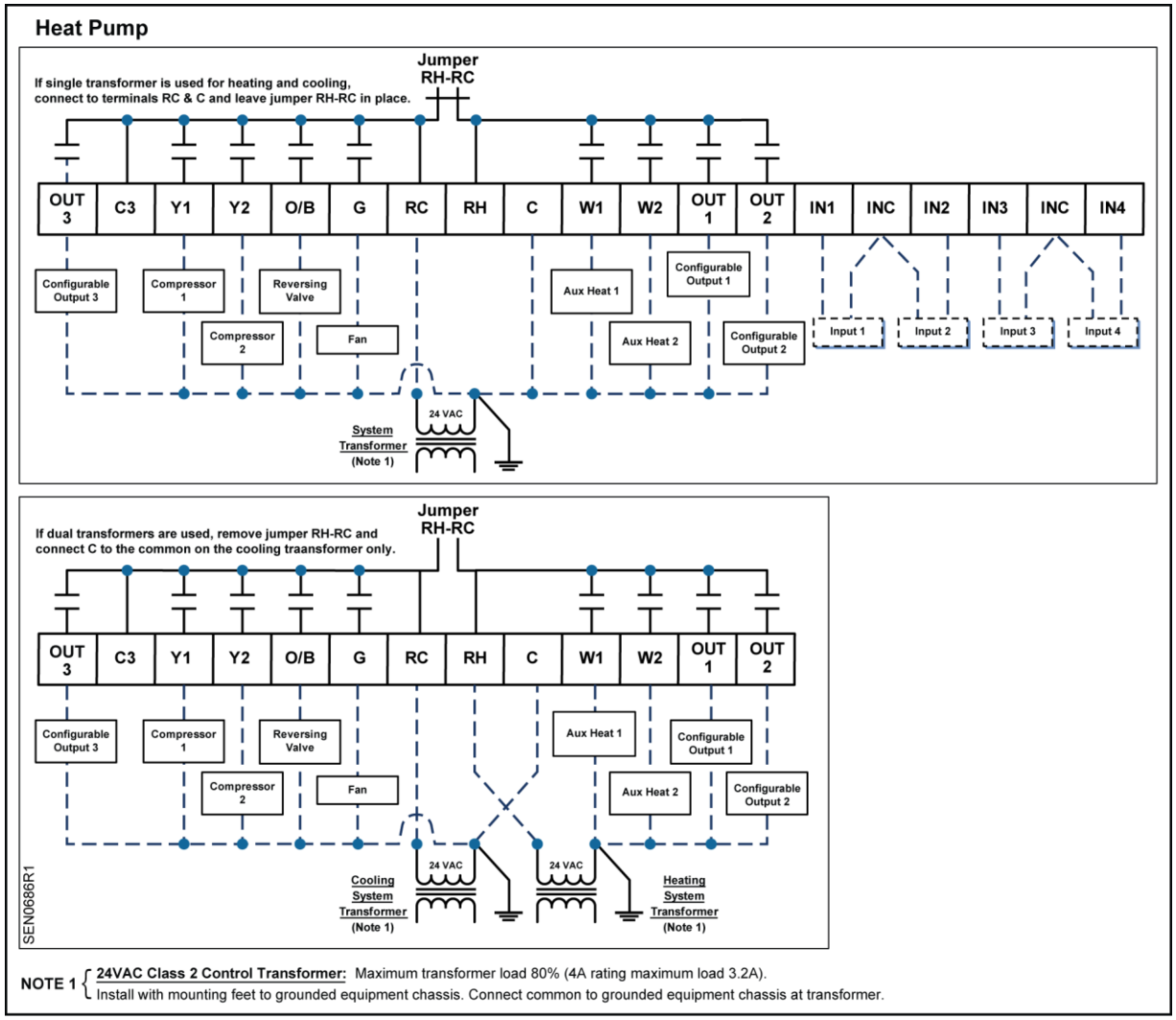

Figure 5. Wiring Schematic, Heat Pump.

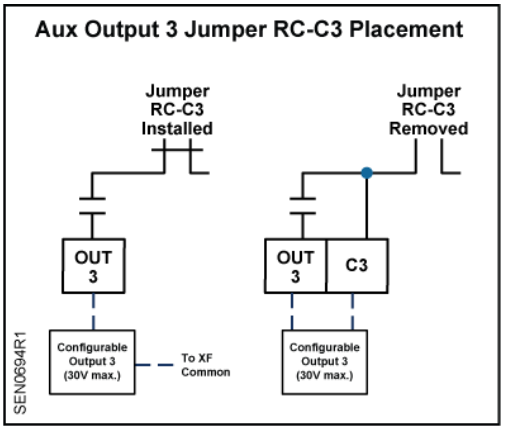

Figure 6. Wiring Schematic, Aux Output 3.

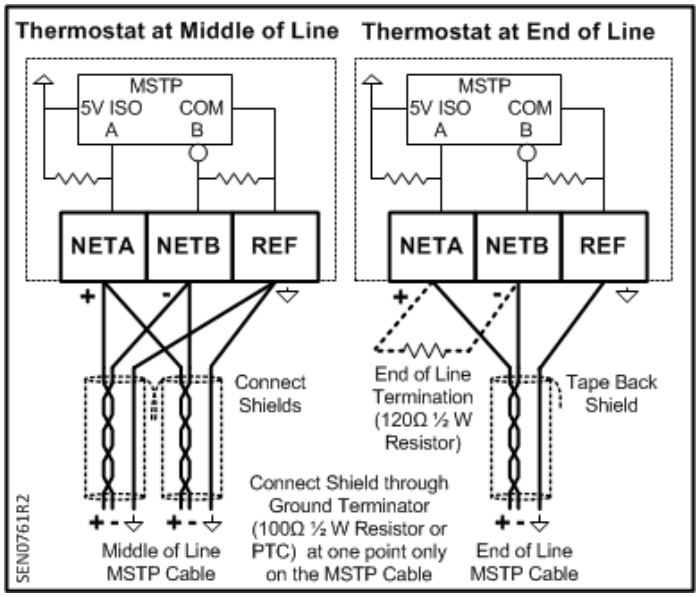

Figure 7. Wiring Schematic, MS/TP NET Port.

Set-up Wizard

When unit is powered up for the first time, **WIZARD** displays. This tool is used to program the basic system parameters. Additional parameters can be accessed directly via Installer/Expert Set-up menus.

NOTE: The thermostat will not start the control sequence until Set-up Wizard is complete.

1. Press **WIZARD** to access the menu.

   NOTE: Press left [⇦] and right [⇨] arrows to select parameters. Press + or – to change parameter settings.

2. After completing all Wizard parameters, press **Confirm** to save and complete.
3. **INSTALLER** displays.
4. Press **INSTALLER** to access Installer Menu.
   a. Enter values obtained from the Energy Management System Network Plan for the 600 Series BACnet Configuration Parameters. See Table 8.

   NOTE: Required to communicate with the Energy Management System.

5. If setup is complete, press the **Settings icon** [⚙] to exit the Set-up Wizard. If further setup is needed, continue to Step 6.
6. Select and modify additional parameters. See Table 3 through Table 9 for all parameter descriptions. Use the space provided in Table 16 to record any modified parameter settings.
7. Press the **Settings icon** [⚙] when finished to exit setup.

Programming Temperature Setpoints

1. Touch the center of the Home screen to access the room temperature screen. Use the left [⇦] and right [⇨] arrows adjacent to the text line to display the room temperature and humidity.
2. Touch the **Setpoint icon** [🌡] of the screen to access room temperature and humidity setpoints.

   NOTE: Only the setpoints in the current mode display and can be modified. For instance, if the thermostat is in heating mode, only the heating setpoint displays and can be modified. If the thermostat is in AUTO mode, both the heating and cooling setpoints will be displayed and can be modified.

3. Use the left [⇦] and right [⇨] arrows to access the different setpoints, and the **+** and **–** icons to adjust the setpoints.
4. Touch the center of the screen to exit Setpoint Programming.

   NOTE: If the screen is not touched for 10 seconds, the unit returns to the Home screen.

Programming Time and Date

1. Touch the center of the Home screen.
2. Press the **Settings icon** [⚙]. **SCHEDULER** displays.
3. Use the left [⇦] and right [⇨] arrows to access the Time menu. Press **TIME**. Press the two-digit hour display to change the hour, or press the two-digit minute display to change the minutes. Press the left arrow to decrease the value, and the right arrow to increase the value.
4. Press the **Settings icon** [⚙] to save.
5. Use the left [⇦] and right [⇨] arrows to access the Date menu. Press **DATE**. Use the arrows to select the month and year; use +/- to set the date.
6. Press the **Settings icon** [⚙] to save.

Installer Menu

1. Touch the center of the Home screen.
2. Press the **Settings icon** [⚙]. **SCHEDULER** displays.
3. Press the left arrow [⇦].
4. Press **INSTALLER.**
5. Using the lower left [⇦] and right [⇨] arrows, enter the password.
6. Press **PASSWORD** to accept the password.

   NOTE: The Installer Level default password is 00:00

7. Press the **Settings icon** [⚙] to accept changes and return the unit to the Home screen.

   NOTE: If you do not provide input, the thermostat will automatically exit the Installer menu and resume normal system control after five minutes.

Programming the Schedule

1. Touch the center of the Home screen.
2. Press the **Settings icon** [ ]. **SCHEDULER** will display.
3. Press **SCHEDULER**.
4. Use the left [⇦] and right [⇨] arrows to select the day. Press the **day** to select.
5. Use the **+** and **–** icons to set the mode: Comfort (**ON**) or Economy (**ECO**).
6. Use the left [⇦] and right [⇨] arrows to adjust the start time for each programming period. Adjust the hours and minutes individually by pressing the two-digit hour or two-digit minute fields.
7. Use the left [⇦] and right [⇨] arrows to select the next event for the given day. Configure remaining events as desired.
8. Press the **Settings** icon [ ], then the left [⇦] and right [⇨] arrows to select the next day. Repeat steps 5 through 7 until the schedule is fully programmed.

Maintenance

Locking/Unlocking the Touch Screen

To prevent unauthorized access to thermostat settings, use Parameter P211 to configure screen lockouts. The lock icon [ ] indicates that the screen is locked. To unlock the keypad, do the following:

1. Touch the center of the Home screen to access the room temperature screen.
2. Press the **Settings icon** [ ] once and **LOCKED** displays.
3. Press and hold the **Settings icon** [ ] for 5 seconds; **PASSWORD** displays.
4. Using the lower left [⇦] and right [⇨] arrows, enter the **INSTALLER** password.
5. Press **PASSWORD** to accept the password.
6. Set Parameter 211 (Keypad Lockout) to OFF to disable keypad lockout.
7. Touch the Setpoint icon [ ] of the screen to return to the Home screen.

Clearing Service Reminders

The thermostat displays **SERVICE REQUIRED** and an associated service reminder if the reminder timer (Parameters 208 - 210) has timed out. To clear these, do the following:

1. Touch the center of the Home screen to access the room temperature screen.
2. Press the **Settings icon** [ ] and **SERVICE** displays.
3. Use the left [⇦] and right [⇨] arrows to select the service reminder.
4. To clear, touch the + icon and the display changes from “-----“ to **OFF**.
5. Counter resets and reminder icons turn off.

Viewing Fault Messages

The thermostat displays **SERVICE REQUIRED** if a sensor fails or a service reminder has timed out. To view these, do the following:

1. Touch the center of the Home screen to access the room temperature screen.
2. Press the **Settings icon** [ ] and **SERVICE** displays.
3. Press **SERVICE** and review faults. Use the left [⇦] and right [⇨] arrows to see all faults.

NOTE: The fault message is automatically cleared when the root cause of the failure is resolved.

Resetting the Unit to Factory Defaults

CAUTION:

The following steps set **ALL** parameters to factory defaults (including passwords), and restart the Set-up Wizard.

1. Log in as either an Installer or Expert.
2. Press the left [⇦] arrow. **RESTORE** displays.
3. Press **+** to change the setting to **YES**.
4. Press **RESTORE**.

This resets the unit and restarts the Set-up Wizard.

Table 3. 100 Series Parameters.

Parameter	Definition	Display	Value Range	Default	Extended Definition	Notes
P101*	System Type	SYS TYPE	CO(1) HP(2)	CO	CO = Conventional HP = Heat Pump	
P102*	Cooling Stages	COOL STGS	0 1 2 3	2	Sets number of cooling stages	
P103*	Heating Stages	HEAT STGS	0 1 2 3	2	Sets number of heating stages	
P104*	Aux Heating Stages	AUX HT STG	0 1 2	0	Sets number of auxilary heat stages	
P105*	Fan Operation	HTG FAN	ELE gAS	ELE	ELE = Fan Relay energized on call for heat gAS = Fan Relay always energized unless Aux Heat calls for heat.	
P106*	Reversing Valve	REV VALVE	0 b	0	0 = Energize reversing valve on cooling b = Energize reversing valve on heating	~ This parameter only appears if system is heat pump
P107*	Scheduler Days	SCHEDULER	1 2 3 7 OFF	2	1 = Schedule all days with same schedule 2 = One schedule for M-F and another for Sat + Sun 3 = One schedule for M-F, Sat + Sun scheduled individually 7 = Schedule each day individually OFF = Scheduler Disabled	
P109*	Units	UNITS	F C	F		
P110	Changeover	AUTO CHNGE	YES NO	YES		~ This parameter does not appear on systems that are heat only or cool only
P111	Changeover Deadband	DEADBAND	3 4 5 6 7 8 9	5°F	Deadband in degrees F	~ This parameter does not appear if CHANGEOVER = M ~ This parameter does not appear on systems that are heat only or cool only
P112	Daylight Savings	DAYLT SAVE	YES NO	NO	Y = Auto adjust for daylight savings time N = Does not auto adjust for daylight savings time	
P113	Display Temp Setpoint	TMP SP DIS	0=Absolute 1=Relative	0=Absolute	Selection of setpoint display: absolute or relative value	

* Included in Set-up Wizard

Table 4. 200 Series Parameters.

Parameter	Definition	Display	Value Range	Default	Extended Definition	Notes
P201	Heat Temp Limit	HEAT LIMIT	45 - 95	95°F	Sets maximum allowable heating setpoint	~ Does not appear if HEAT STAGES = 0
P202	Cool Temp Limit	COOL LIMIT	50 - 95	50°F	Sets minimum allowable cooling set point	~ Does not appear if COOL STAGES = 0
P203	Temperature Display Offset	TMP OFFSET	-5 to +5	0°F	Enables adjustment of control temp and display temp in 1-degree increments. Applies only to onboard temp sensor. Indoor temp only.	~ Do not adjust until in operation for at least 1 hour.
P204	Override Time Limit	HRS OVR RD	"---" = unlimited; 0 = none; 2 =2 hours; 4 = 4 hours; 6 = 6 hours; 8 = 8 hours 10 = 10 hours 12 = 12 hours 24 = 24 hours 96=96 hours	2	Number of hours that scheduled setpoint can be manually overridden. 0 = no override allowed	~ This parameter does not appear if SCHEDULER = OFF
P205	Override Temp Limit	TMP OVR RD	--- 1 2 3 4 5 6 7 8 9 10	---	Number of degrees F that are allowed above or below scheduled setpoint. --- = Unlimited	~ This parameter does not appear if SCHEDULER = OFF
P206	Heat Pump Compressor Lock Out	HP COMP LO	OFF 15=15°F 20=20°F 25=25°F 30=30°F 35=35°F 40=40°F 45=45°F	OFF	Heat pump compressor will not operate below this outdoor temp -- forcing unit to auxiliary heat	~ Only shown if SYS TYPE = HP with AUX HEAT and there is an outdoor temp sensor ~ Must be lower than HP AUX LO
P207	Heat Pump Auxiliary Heat Lockout	HP AUX LO	OFF 40=40°F 45=45°F 50=50°F 55=55°F 60=60°F	OFF	Heat pump auxiliary heat will not operate above this outdoor temp.	~ Only shown if SYS TYPE = HP with AUX HEAT and there is an outdoor temp sensor ~ Must be higher than HP COMP LO
P208	Service UV Lamp	UV LAMP	0-365	0	Number of days until SERVICE UV LAMP message is displayed. 0 = function disabled.	
P209	Service Humidifier	HMDFR SRVC	0-365	0	Number of days until SERVICE HUMIDIFIER message is displayed. 0 = function disabled.	
P210	Service Air Filter	FLTR SRVC	0-365	0	Number of days until SERVICE AIR FILTER message is displayed. 0 = function disabled.	
P211	Keypad Lockout	KEY LOCK	OFF 2 3	OFF	OFF = No lockout 2 = Partial Lockout (only temp setpoint can be adjusted) 3= Total Lockout	
P212	Clock Format	CLOCK	12 24	12	12 = 12-hour format 24 = 24-hour format	

Parameter	Definition	Display	Value Range	Default	Extended Definition	Notes
P213	Backlight	LIGHT	0-99	15	Number of seconds that backlight stays on after screen is touched. 0 = always off.	
P214	Humidity Display Offset	HMD OFFSET	-10%...0…+10%	0	Enables adjustment of control humidity and display humidity in 1% increments. Applies only to onboard humidity sensor.	If temperature reading does not match actual room temp, first adjust P203 (TMP OFFSET), then P214. Do not adjust until in operation for at least 1 hour.
P220	Heating Setpoint Comfort	COMF HT SP	As defined in Heat Temp Limit (P201)	70°F	Normal occupied heating setpoint	
P221	Cooling Setpoint Comfort	COMF CL SP	As defined in Cool Temp Limit (P202)	75°F	Normal occupied cooling setpoint	
P222	Heating Setpoint Economy	ECO HT SP	40 - 104	62°F	Normal unoccupied heating setpoint	
P223	Cooling Setpoint Economy	ECO CL SP	45 - 104	82°F	Normal unoccupied cooling setpoint	
P224	Heating Setpoint Protection	PROT HT SP	40 - 104	40°F	Normal minimum heating setpoint	
P225	Cooling Setpoint Protection	PROT CL SP	45 - 104	104°F	Normal maximum cooling setpoint	

Table 5. 300 Series Parameters.

Parameter	Definition	Display	Value Range	Default	Extended Definition	Notes
P301	Configurable Input 1 (IN1)	INPUT 1	1 2 3 4 5 6 7 8 9 OFF	OFF	1 = Indoor Temperature (Remote) 2 = Indoor Temperature (Average) 3 = Supply Temp 4 = Return Temp 5 = Outdoor Temp 6 = Humidity (0-10V) 7 = CO2 (0-10V) 8 = Occupancy (DI) 9 = Fault OFF = Not Used	~ Cannot have duplicate selections for inputs 1-4 ~ If set to 9 (fault), a DI here causes SERVICE REQUIRED segment to activate
P302	Temperature Input 1 Type	TMP IN 1	1 2	1	1= Type 2 Thermistor 2 = 0-10V	~ Only appears if INPUT 1 = 1/2/3//4/5
P303	Temperature Input 1 Low	TMP 1 LO	-58 -- +250F -50 --- +120C	0	Calibrates thermostat to low end of temp sensor signal (e.g., 0V = -40°F)	Only appears if TMP IN 1 = 1 Must be lower than TMP 1 HI
P304	Temperature Input 1 High	TMP 1 HI	-58 -- +250F -50 --- +120C	120	Calibrates thermostat to high end of temp sensor signal at 10 volts (e.g., 10V = 250°F)	Only appears if TMP IN 1 = 1 Must be higher than TMP 1 LO
P305	Configurable Input 2 (IN2)	INPUT 2	1 2 3 4 5 6 7 8 9 OFF	OFF	1 = Indoor Temperature (Remote) 2 = Indoor Temperature (Average) 3 = Supply Temp 4 = Return Temp 5 = Outdoor Temp 6 = Humidity (0-10V) 7 = CO2 (0-10V) 8 = Occupancy (DI) 9 = Fault OFF = Not Used	~ Cannot have duplicate selections for inputs 1-4 ~ If set to 9 (fault), a DI here causes SERVICE REQUIRED segment to activate

Parameter	Definition	Display	Value Range	Default	Extended Definition	Notes
P306	Temperature Input 2 Type	TMP IN 2	1 2	1	1 = Type 2 Thermistor 2= 0-10V	~ Only appears if INPUT 2 = 1/2/3/4/5 ~ SCW can be 0 or 1
P307	Temperature Input 2 Low	TMP 2 LO	-58 -- +250F -50 --- +120C	0	Calibrates thermostat to low end of temp sensor signal (e.g., 0V = -40°F)	Only appears if TMP IN 2 = 1 Must be lower than TMP 2 HI
P308	Temperature Input 2 High	TMP 2 HI	-58 -- +250F -50 --- +120C	120	Calibrates thermostat to high end of temp sensor signal at 10 volts (e.g., 10V = 250°F)	Only appears if TMP IN 2 = 1 Must be higher than TMP 2 LO
P309	Configurable Input 3 (IN3)	INPUT 3	1 2 3 4 5 6 7 8 9 OFF	OFF	1 = Indoor Temperature (Remote) 2 = Indoor Temperature (Average) 3 = Supply Temp 4 = Return Temp 5 = Outdoor Temp 6 = Humidity (0-10V) 7 = CO2 (0-10V) 8 = Occupancy (DI) 9 = Fault OFF = Not Used	~ Cannot have duplicate selections for inputs 1-4 ~ If set to 9 (fault), a DI here causes SERVICE REQUIRED segment to activate
P310	Temperature Input 3 Type	TMP IN 3	1 2	1	1 = Type 2 Thermistor 2 = 0-10V	~ Only appears if INPUT 3 = 1/2/3/4/5
P311	Temperature Input 3 Low	TMP 3 LO	-58 -- +250F -50 --- +120C	0	Calibrates thermostat to low end of temp sensor signal (e.g., 0V = -40°F)	Only appears if TMP IN 3 = 1 Must be lower than TMP 3 HI
P312	Temperature Input 3 High	TMP 3 HI	-58 -- +250F -50 --- +120C	120	Calibrates thermostat to high end of temp sensor signal at 10 volts (e.g., 10V = 250°F)	Only appears if TMP IN 3 = 1 Must be higher than TMP 3 LO
P313	Configurable Input 4 (IN4)	INPUT 4	1 2 3 4 5 6 7 8 9 OFF	OFF	1 = Indoor Temperature (Remote) 2 = Indoor Temperature (Average) 3 = Supply Temp 4 = Return Temp 5 = Outdoor Temp 6 = Humidity (0-10V) 7 = CO2 (0-10V) 8 = Occupancy (DI) 9 = Fault OFF = Not Used	~ Cannot have duplicate selections for inputs 1-4 ~ If set to 9 (fault), a DI here causes SERVICE REQUIRED segment to activate
P314	Temperature Input 4 Type	TMP IN 4	1 2	1	1= Type 2 Thermistor 2= 0-10V	Only appears if INPUT 2 = 1/2/3/4/5
P315	Temperature Input 4 Low	TMP 4 LO	-58 -- +250F -50 --- +120C	0	Calibrates thermostat to low end of temp sensor signal (e.g., 0V = -40°F)	~ Only appears if TMP IN 4 = 1 ~ Must be lower than TMP 4 HI
P316	Temperature Input 4 High	TMP 4 HI	-58 -- +250F -50 --- +120C	120	Calibrates thermostat to high end of temp sensor signal at 10 volts (e.g., 10V = 250°F)	~ Only appears if TMP IN 4 = 1 ~ Must be higher than TMP 4 LO
P317	Aux Output 1 (OUT1)	AUX OUT 1	1 2 3 4 5 OFF	OFF	1 = Humidification 2 = Dehumidification 3 = Occupied 4 = Air Quality 5 = Economizer Enable OFF = Not Used	~ Cannot have duplicate selections for outputs 1-3 ~ Air Quality not an option unless an input is set to CO2 sensor ~ If system is conventional with 3H +3C, AO1 will default to, and be locked as, stage 3 cooling.

Parameter	Definition	Display	Value Range	Default	Extended Definition	Notes
P318	Aux Output 2 (OUT2)	AUX OUT 2	1 2 3 4 5 OFF	OFF	1 = Humidification 2 = Dehumidification 3 = Occupied 4 = Air Quality 5 = Economizer Enable OFF = Not Used	~ Cannot have duplicate selections for outputs 1-3 ~ Air Quality not an option unless an input is set to CO2 sensor
P319	Aux Output 3 (OUT3 & C3)	AUX OUT 3	1 2 3 4 5 OFF	OFF	1 = Humidification 2 = Dehumidification 3 = Occupied 4 = Air Quality 5 = Economizer Enable OFF = Not Used	~ Cannot have duplicate selections for outputs 1-3 ~ Air Quality not an option unless an input is set to CO2 sensor
P320	Independent Humidity Control	IND HMDTY	YES NO	NO	NO = Humidification & Dehumidification only when heating or cooling relay is energized Yes = Humidification or dehumidification independent of heating/cooling	

Table 6. 400 Series Parameters.

Parameter	Definition	Display	Value Range	Default	Extended Definition	Notes
P401	Unit Number	UNIT NMBR	0-999	---	Installer can use this field to link a thermostat to an HVAC unit or zone number. If any value other than --- is entered, the "sleep" screen should display UNIT NUMBER in text box above room temp display.	
P402	CO2 Set Point	CO2 SET PT	500 -- 2000	1000	Only appears if an analog input is configured as a C02 sensor	
P403	Pre-Occupancy Purge	PRE OC PRG	OFF 1 2 3	OFF	OFF = Disabled 1 = 1 Hour 2 = 2 Hours 3 = 3 Hours	~ Only show if an output is set to economizer and scheduler function is active
P404	Occupancy Sensor Min Run Timer	OCC MRT	3 -- 60	30	Minimum run time in minutes for occupancy detected via digital input from external sensor	~ Only shown if an input is set to Occupancy Sensor
P405	Semi-Continuous Fan	CONT FAN	0=NO 1=Yes	NO		~ Only shown if a schedule is present or if an input is configured for occupancy sensor
P407	Installer Password	INSTALL PW	0000 -- 4999	Current PW		

Expert Level Menus

1. Touch the center of the Home screen.
2. Press the **Settings icon** [⚙]. **SCHEDULER** displays.
3. Press the left [⇦] arrow.
4. Press **INSTALLER**.
5. Using the lower left [⇦] and right [⇨] arrows, enter the password.
6. Press **PASSWORD** to accept the password and return the unit to the Setup Menu.

   NOTE: The Expert Level default password is **99:99**.
7. See Table 3 through Table 10 and *Wiring Diagrams* for additional information.
8. Press the **Settings icon** [⚙] to accept changes and return the unit to the Home screen.

Recovering a Lost Password

If either of the default passwords is changed, the new password(s) should be recorded and maintained for future reference. If the records are misplaced, the following procedure can be used to set new passwords:

1. Cycle power to the thermostat. This can be done by loosening the securing screws on the bottom of the housing and momentarily separating the thermostat from the base plate.
2. Within 80 seconds of restoring power, navigate to the Installer Set-up screen and enter **98:21** as the password.
3. The thermostat will go directly to the Expert Level password screen. A new Expert Level password can now be set.
4. After setting a new Expert Level password, the thermostat will return to the Home screen.
5. The new Expert Level password can be used to enter the full Expert Level set-up menu where both the Expert Level and Installer Level passwords can now be set to new values.

Table 7. 500 Series Expert Settings Parameters.
(Only available if logged in as an Expert.)

NOTE: P500 Series parameters are factory-set for optimum system performance. Changing these settings may degrade efficiency and/or compromise occupant comfort.

Parameter	Definition	Display	Value Range	Default	Extended Definition
P501	Interstage Delay - Cooling	STG DLY CL	1 to 10 minutes	5	Time delay before next stage of cooling will be activated.
P502	Interstage Differential - Cooling	STG DIF CL	1°F (0.5°C) to 10°F (5.0°C)	1°F	Degrees above cooling deadband before Stage Delay timer is initiated.
P503	Cooling Minimum Off Time	M O T CL	1 to 10 minutes	5	Minimum time between compressor starts.
P504	Cooling Minimum On Time	M R T CL	1 to 10 minutes	3	Minimum run time for any stage of cooling.
P505	Changeover Delay	C-O DLY	1 to 60	10	Delay in minutes before system will automatically switch from heating to cooling (or vice versa).
P506	Cooling Deadband	CL DEADBND	1°F (0.5°C) to 5°F (4.0°C)	1°F	The deadband is divided equally above and below setpoint. Cooling will begin when temperature exceeds upper point of deadband and ceases when temperature falls below lower point of deadband.
P507	Interstage Delay - Heating	STG DLY HT	1 to 10 minutes	5	Time delay before next stage of heating will be activated.
P508	Interstage Differential - Heating	STG DIF HT	1°F (0.5°C) to 5°F (5.0°C)	Conv. = 1°F (0.5°C) HP = 2°F (1.0°C)	Degrees below heating deadband before Stage Delay timer is initiated.
P509	Heating Minimum Off Time	M O T HT	1 to 10 minutes	5	Minimum time between heating starts.
P510	Heating Minimum On Time	M R T HT	1 to 10 minutes	Conv = 3 HP = 10	Minimum run time for any stage of heating.
P511	Heating Deadband	HT DEADBND	1°F (0.5°C) to 5°F (4.0°C)	1°F (0.5°C)	The deadband is divided equally above and below setpoint. Heating will begin when temperature falls below lower point of deadband and ceases when temperature rises above upper port of deadband.

Table 8. 600 Series BACnet Configuration Parameters*.

Parameter	Definition	Display	Value Range	Default	Extended Definition
P601	MS/TP MAC address	MS--TP MAC	0-255	255	MS/TP MAC address must be unique for the entire network 1 to 254. In systems that support and use Master Nodes valid range to use is from 1 to 127. In systems that support and are using auto discovery leave value at default 255 **NOTE:** When integrating with APOGEE®, set this parameter to be a Master Node.
P602	Baud Rate	BAUD RATE	A = Auto 9.6 = 9600 19.2 =19200 38.4 = 38400 57.6 = 57600 76.8 = 76800 115.2 =115200	A=Auto	This parameter will set the network's baud rate. Auto value will match detected Baud Rate in systems that support and are using auto discovery leave value at default "A"
P603	Device Instance	DEV ID	0 - 4194303	4194303	Device Instance (unsigned integer 0-4194303) In systems that support and are using auto discovery leave value at default 4194303
P604	Max Master	MAX MASTER	1--127	127	Max Master
P605	Serial number	SER NR	Display Only	Display Only	Display Serial number, 10 digit hex, programmed in factory
P606	Max Info Frames	MAX FRAME	1-- 10	1	Max Info Frames

CAUTION:
* See the Energy Management System Network Plan before entering values in the RDY2000BN 600 Series BACnet Configuration Parameters. Incorrect values will prevent connection to the Energy Management System.

Table 9. 700 Series BACnet Configuration Parameters

Parameter	Definition	Display	Value Range	Default	Extended Definition
P701	Firmware	FIRMWARE	Display only	Display only	Display Firmware Version

Table 10. 900 Series Expert Settings Parameters.
(Only available if logged in as an Expert.)

CAUTION:

P900 Series parameters are used by professional HVAC technicians during the system commissioning process. Interlocks and time delays are defeated while using P900 parameters. Use of these parameters by non-qualified personnel may result in equipment damage.

Parameter	Definition	Display	Value Range	Default	Extended Definition
P901	Test Compressor 1	Y1 Test	1=OFF 0=ON	OFF	OFF = Relay not energized ON = Relay energized
P902	Test Compressor 2	Y2 Test	1=OFF 0=ON	OFF	OFF = Relay not energized ON = Relay energized
P903	Test Reversing Valve	O/B TEST	1=OFF 0=ON	OFF	OFF = Relay not energized ON = Relay energized
P904	Test Fan	G Test	1=OFF 0=ON	OFF	OFF = Relay not energized ON = Relay energized
P905	Test Heat Stg 1	W1 Test	1=OFF 0=ON	OFF	OFF = Relay not energized ON = Relay energized
P906	Test Heat Stg 2	W2 Test	1=OFF 0=ON	OFF	OFF = Relay not energized ON = Relay energized
P907	Test Output 1	OUT1 TST	1=OFF 0=ON	OFF	OFF = Relay not energized ON = Relay energized
P908	Test Output 2	OUT2 TST	1=OFF 0=ON	OFF	OFF = Relay not energized ON = Relay energized
P909	Test Output 3	OUT3 TST	1=OFF 0=ON	OFF	OFF = Relay not energized ON = Relay energized
P911	Expert Password	XPRT PW	5000 -- 9999	Current PW	
P999	Restore Factory Defaults	RESTORE	0=No 1=Yes	No	

Auxiliary Sequences

The RDY2000BN primary sequences are designed to control single and multi-stage heating/cooling systems to maintain a user-selected temperature setpoint.

The following auxiliary sequences are available to optimize occupant comfort and system efficiency:

Humidification

Parameters

- P317/ P318/P319: One of these must be set to 1
- P320: NO (default) = Humidification will only occur if there is a call for heating. YES = Humidification relay will be energized independently of heating and cooling relays.
- Humidity Setpoint: User adjustable to desired level in humidification mode.

Sensors: Onboard humidity sensor or optional remote humidity sensor.

The humidification relay will energize when measured humidity drops approximately 4% below setpoint and will de-energize when measured humidity reaches setpoint. Deadbands and proof timers are in force to prevent short cycling.

Dehumidification

Parameters

- P317/ P318/P319: One of these must be set to 2
- P320: NO (default) = Dehumidification will only occur if there is a call for cooling. YES = Dehumidification relay will be energized independently of heating and cooling relays.
- Dehumidity Setpoint: User adjustable to desired level in dehumidification mode.

Sensors: Onboard humidity sensor or optional remote humidity sensor.

The dehumidification relay will energize when measured humidity rises approximately 4% above setpoint and will de-energize when measured humidity reaches setpoint. Deadbands and proof timers are in force to prevent short cycling.

Economizer Enable

Parameters

- P317/P318/P319: One of these must be set to 5.
- P301/P305/P309/P313: One of these must be set to 8 if the optional occupancy sensor is used.

Sensors: None required, however an optional occupancy sensor can be used instead of, or in conjunction with the scheduler to determine occupancy.

The Economizer Enable relay will be energized whenever a cooling relay is energized or the space is occupied. The thermostat uses the scheduled Comfort mode to determine if the space is occupied.

An optional occupancy sensor can also be used for definitive proof of occupancy.

An output configured for Occupancy Notification can also be used for Economizer Enable.

Pre-Purge

Parameters

- P317/P318/P319: One of these must be set to **5**.
- P403

Sensors: None required.

To enable the economizer and energize the fan relay prior to scheduled occupancy, set P403 to the number of hours before scheduled occupancy for pre-purge to begin. This function requires a schedule to be configured.

Occupancy Notification

Parameters

- P301/P305/P309/P313: If the optional occupancy sensor is used, one of these must be set to 8.
- P317/P318/P319: To signal an external device that the space is occupied, one of these must be set to 3
- P404: If the optional occupancy sensor is used, P404 can be used to set a minimum run timer for any actions that are activated by occupancy, such as Economizer Enable, control to occupied temperature setpoints, and so on. Note that many occupancy sensors also have onboard proof timers.

There are two primary methods by which the thermostat can assume the space is occupied.

1. The space is assumed to be occupied when the schedule mode is set to Comfort.
2. During periods in which the schedule indicates the space is unoccupied, any human interaction with the thermostat (for example, setpoint adjustment) will put the thermostat into Occupied mode.

The optional occupancy sensor can be used in conjunction with the schedule. The thermostat will follow the assumptions above, but an input from the occupancy sensor during a scheduled unoccupied period will put the thermostat in the Occupied mode for the duration of the timer set in P404.

To utilize the Occupancy functions, the thermostat must have an active schedule.

Air Quality Management

Parameters

- P301/P305/P309/P313: One of these must be set to **7**.
- P317/P318/P319: One of these must be set to **4**.
- P402: CO2 Setpoint

Sensors: Optional CO2 Sensor

- If measured CO2 exceeds setpoint by 200 PPM for a minimum of 60 seconds, the Air Quality output and fan relays will be energized**.** The minimum run time is 5 minutes.
- When measured CO2 falls below setpoint and appropriate minimum run time has been met, the Air Quality output relay will be de-energized and the fan relay shall revert to normal operation.

Table 11. Daily Schedule Example – 6 Periods per Day, Parameter 107 = 1.

Day	Monday – Sunday (Each day is the same)					
Event	1	2	3	4	5	6
Mode	COM	ECO	COM	ECO	COM	ECO
Time	6:00 AM	11:00 AM	1:00 PM	2:00 PM	3:00 PM	10:00 PM

Table 12. Work Week Schedule with Weekend Example – 6 Periods per Day, Parameter 107 = 2.

Day	Work Week (Monday-Friday)						Weekend (Saturday-Sunday)					
Event	1	2	3	4	5	6	1	2	3	4	5	6
Mode	COM	ECO	COM	ECO	COM	ECO	COM	ECO	COM	ECO	COM	ECO
Time	6:00 AM	11:00 AM	1:00 PM	2:00 PM	3:00 PM	10:00 PM	8:00 AM	11:00 AM	1:00 PM	2:00 PM	3:00 PM	10:00 PM

Table 13. Work Week Schedule with Separate Weekend Days Example – 6 Periods per Day, Parameter 107 = 3.

	Work Week (Monday-Friday)						Saturday						Sunday					
Event	1	2	3	4	5	6	1	2	3	4	5	6	1	2	3	4	5	6
Mode	COM	ECO	COM	ECO	COM	ECO	COM	ECO	COM	ECO	COM	ECO	COM	ECO	COM	ECO	---	---
Time	6:00 AM	11:00 AM	1:00 PM	2:00 PM	3:00 PM	10:00 PM	8:00 AM	11:00 AM	1:00 PM	2:00 PM	3:00 PM	10:00 PM	10:00 AM	12:00 PM	2:00 PM	3:00 PM	--:--	--:--

Table 14. Individual Days (Monday – Sunday) Example - 6 Periods per Day, Parameter 107 = 7.

Day	Monday – Sunday (Each day can be unique)					
Event	1	2	3	4	5	6
Mode	Comfort	Economy	Comfort	Economy	Comfort	Economy
Time	6:00 AM	11:00 AM	1:00 PM	2:00 PM	3:00 PM	10:00 PM

NOTE:
The Scheduler default setting consists of two events: Event 1 = ON (Comfort) at 7:00 AM, Event 2 = ECO (Economy) at 7:00 PM.

Table 15. Suggested Sensors for Use with RDY2000BN.

Siemens Part Number	Description	Signal Format
QAA2330.EWNN	Remote Wall-Mounted Sensor – Temperature Only	10K Ohm, Type II NTC
QFA33SS.EWNN	Remote Wall-Mounted Temperature and Humidity Sensor	0-10V
QAM2030.010	Duct-Mounted Temperature Sensor	10K Ohm, Type II NTC
QFM2160U	Duct-Mounted Temperature & Humidity Sensor	0-10V
QPA2000	Wall-Mounted CO2 Sensor	0-10V
QPA2062	Wall-Mounted Temperature + Humidity + CO2 Sensor	0-10V
QPM2162	Duct-Mounted Temperature + Humidity + CO2 Sensor	0-10V
QAC2030	Outdoor Air Temperature Sensor	10K Ohm, Type II NTC
QAD2030	Surface-Mount Pipe Temperature Sensor	10K Ohm, Type II NTC

Federal Communications Commission Notice

This equipment has been tested and found to comply with the limits for a Class B digital device, pursuant to Part 15 of the FCC rules. These limits are designed to provide reasonable protection against harmful interference in a residential installation. This equipment generates, uses, and can radiate radio frequency energy and, if not installed and used in accordance with the instructions, may cause harmful interference to radio communications. However, there is no guarantee that interference will occur in a particular installation. If this equipment does cause harmful interference to radio or television reception, which can be determined by turning the equipment off and on, the user is encouraged to try to correct the interference by one or more of the following measures:
--Reorient or relocate the receiving antenna.
--Increase the separation between the equipment and the receiver.
--Connect the equipment into an outlet on a circuit different from that to which the receiver is connected.
--Consult the dealer or an experienced radio/TV technician for help.

Modifications

This device complies with Part 15 of the FCC rules and IC rules. Changes or modifications not expressly approved by Siemens Industry Inc. could void the user's authority to operate the equipment.

Industry Canada

This Class B digital apparatus meets all requirements of the Canadian Interference-Causing Equipment Regulations.

Cet appareil numérique de la classe B respecte toutes les exigences du Règlement sur le matériel brouilleur du Canada.
CAN ICES-3 (B)/NMB-3 (B)

Limited Warranty

Siemens Product Guard Warranty warrants the purchased from it or its authorized reseller to be free from defects in material and workmanship under normal use during the two-year period commencing on the date of purchase. The written proof of purchase is required for such warranty period to apply.

The software included in this Siemens product is licensed for use subject to the Siemens end-user license agreement ("*EULA*") posted at www.usa.siemens.com/btcpseula (Siemens' EULA web site) for this software identified by product model or part number on the Siemens EULA web site.

Information in this publication is based on current specifications. The company reserves the right to make changes in specifications and models as design improvements are introduced. APOGEE is a registered trademark of Siemens Industry, Inc. Other product or company names mentioned herein may be the trademarks of their respective owners. © 2020 Siemens Industry, Inc.

Table 16. Record Field Settings.

Parameter	Definition	Default	Field Value
P101	System Type	CO	
P102	Cooling Stages	2	
P103	Heating Stages	2	
P104	Aux Heating Stages	0	
P105	Fan Operation	ELE	
P106	Reversing Valve	O	
P107	Scheduler Days	2	
P109	Units	F	
P110	Changeover	YES	
P111	Changeover Deadband	5°F (2.5°C)	
P112	Daylight Savings	NO	
P113	Display Temp Setpoint	0 = Absolute	
P201	Heat Temp Limit	95°F (35.0°C)	
P202	Cool Temp Limit	50°F (10.0°C)	
P203	Temperature Display Offset	0°F (0°C)	
P204	Override Time Limit	2	
P205	Override Temp Limit	---	
P206	Heat Pump Compressor Lock Out	OFF	
P207	Heat Pump Auxiliary Heat Lockout	OFF	
P208	Service UV Lamp	0	
P209	Service Humidifier	0	
P210	Service Air Filter	0	
P211	Keypad Lockout	OFF	
P212	Clock Format	12	
P213	Backlight	15	
P214	Humidity Display Offset	0	
P220	Heating Setpoint Comfort	70	
P221	Cooling Setpoint Comfort	75	
P222	Heating Setpoint Economy	62	
P223	Cooling Setpoint Economy	82	
P224	Heating Setpoint Protection	40	
P225	Cooling Setpoint Protection	104	
P301	Configurable Input 1 (IN1)	OFF	
P302	Temperature Input 1 Type	1	
P303	Temperature Input 1 Low	0°F (-18.0°C)	
P304	Temperature Input 1 High	120°F (50°C)	
P305	Configurable Input 2 (IN2)	OFF	
P306	Temperature Input 2 Type	1	
P307	Temperature Input 2 Low	0°F (-18.0°C)	
P308	Temperature Input 2 High	120°F (50.0°C)	
P309	Configurable Input 3 (IN3)	OFF	
P310	Temperature Input 3 Type	1	
P311	Temperature Input 3 Low	0°F (-18.0°C)	
P312	Temperature Input 3 High	120°F (50.0°C)	
P313	Configurable Input 4 (IN4)	OFF	
P314	Temperature Input 4 Type	1	
P315	Temperature Input 4 Low	0°F (-18.0°C)	
P316	Temperature Input 4 High	120°F (50.0°C)	
P317	Aux Output 1 (OUT1)	OFF	
P318	Aux Output 2 (OUT2)	OFF	
P319	Aux Output 3 (OUT3 & C3)	OFF	
P320	Independent Humidity Control	NO	
P401	Unit Number	---	
P402	CO2 Setpoint	1000	
P403	Pre-Occupancy Purge	OFF	
P404	Occupancy Sensor Min Run Timer	30	
P405	Semi-Continuous Fan	NO	
P407	Installer Password	Current PW	
P501	Interstage Delay - Cooling	5	

Parameter	Definition	Default	Field Value
P502	Interstage Differential - Cooling	1°F (0.5°C)	
P503	Cooling Minimum Off Time	5	
P504	Cooling Minimum On Time	3	
P505	Changeover Delay	10	
P506	Cooling Deadband	1°F	
P507	Interstage Delay - Heating	5	
P508	Interstage Differential - Heating	Conv. = 1°F (0.5°C); HP = 2°F (1°C)	
P509	Heating Minimum Off Time	5	
P510	Heating Minimum On Time	3 (10 if heat pump)	
P511	Heating Deadband	1°F (0.5°C)	
P601	MS/TP MAC address	255	
P602	Baud rate	A = Auto	
P603	Device instance	4194303	
P604	Max master	127	
P605	Serial number	Display only	
P606	Max info frames	1	
P701	Firmware	Display only	
P911	Expert Password	Current PW	