507933-02
6/2020
Supersedes 507933-01

**GAS CHANGEOVER KIT**

# INSTALLATION INSTRUCTIONS FOR NATURAL TO REGULATED LP/PROPANE GAS CHANGEOVER AND HIGH ALTITUDE KIT USED WITH UHCM/LF25/UHSC/LS25-125, 150, 175 & 200KBtuh UNIT HEATERS

## ⚠ WARNING

WARNING - This conversion kit is to be installed by a qualified service technician or other qualified agency in accordance with the manufacturer's instructions, all codes and requirements of the authority having jurisdiction in the USA or Canada. If the information in these instructions is not followed exactly, a fire or explosion may result causing property damage, personal injury or loss of life. The qualified agency performing this work assumes responsibility for this conversion.

## Shipping and Packing List

**Package 1 of 1 contains:**

8 - Burner orifices
1- White Rodgers pressure measuring adapter kit
1- White Rodgers 36G series gas valve conversion kit
2- Unit conversion stickers (3 in 18L12)

## Application

The natural to regulated LP/propane gas change-over and high altitude kit is for use on UHCM/LF25/UHSC/LS25-125, 150, 175, 200 standard unit heaters equipped with the White Rodgers 36G series gas valve.

**TABLE 1**
**KIT APPLICATION**

| Cat. No. | Assembly | Altitude - Feet (Meters) | Orifice Size |
|---|---|---|---|
| 18L12 | 617168-02 | US: 0-5000 (0-1524) | 1.45 |
| | | Canada: 0-7500 (0-2286) | |
| 19A51 | 617168-11 | US: 5001-9000 (1524-2743) | #55 |
| | | Canada: 7501-9500 (2286-2896) | |
| 19A52 | 617168-12 | US: 9001-10000 (2744-3048) | #56 |

## Installation

1 - Set thermostat to lowest setting. The gas supply must be shut off prior to disconnecting the electrical power and proceeding with the conversion.

2 - Move the gas valve lever/switch to OFF position.

## ⚠ CAUTION

As with any mechanical equipment, personal injury can result from contact with sharp sheet metal edges. Be careful when you handle this equipment.

3 - Disconnect gas supply at gas valve.

4 - Disconnect wiring at gas valve. Remove wiring to ignitor electrode and sensor electrode.

5 - *UHSC/LS25 Units Only* - Disconnect plastic tubing attached to the gas valve port. If already installed, remove the combustion air intake box.

6 - Remove screws securing the hood or air diffuser plate to the burner box. See figure 1 or 2.

7 - Remove screws on the gas manifold assembly which holds the assembly to the burner box. See figure 1.

8 - Remove existing burner orifices. Install orifices in manifold.

9 - Install gas valve conversion kit. Refer to manufacturer's instruction packed in valve conversion kit. See figure 3.

10 - Re-install the manifold assembly.

11 - Reinstall the hood or air diffuser plate.

12 - Connect gas supply to gas valve. Connect wiring to gas valve. Replace wiring to ignitor electrode and sensor electrode.

13 - *UHSC/LS25 Units Only* - Reconnect plastic tubing to the gas valve port and replace the combustion air intake box.

## ⚠ WARNING

Improper installation, adjustment, alteration, service or maintenance can cause property damage, personal injury or loss of life. Installation and service must be performed by a licensed professional installer (or equivalent), service agency or the gas supplier.

***IMPORTANT -*** *Carefully check all piping connections. DO NOT use matches, candles, open flame or other means of ignition to check for gas leaks. Use a soap solution or other preferred means.*



0620
507933-02

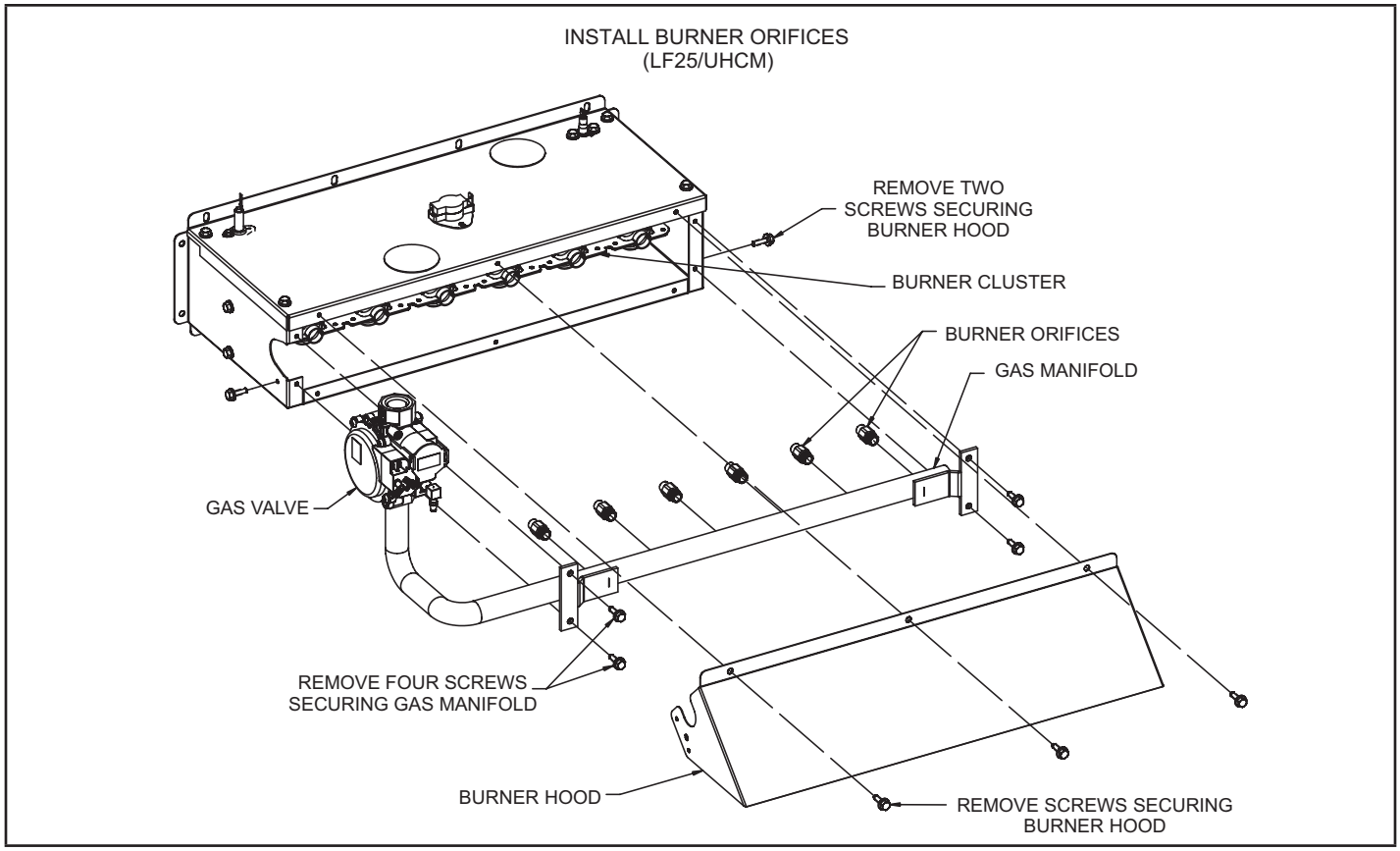


**Figure 1**

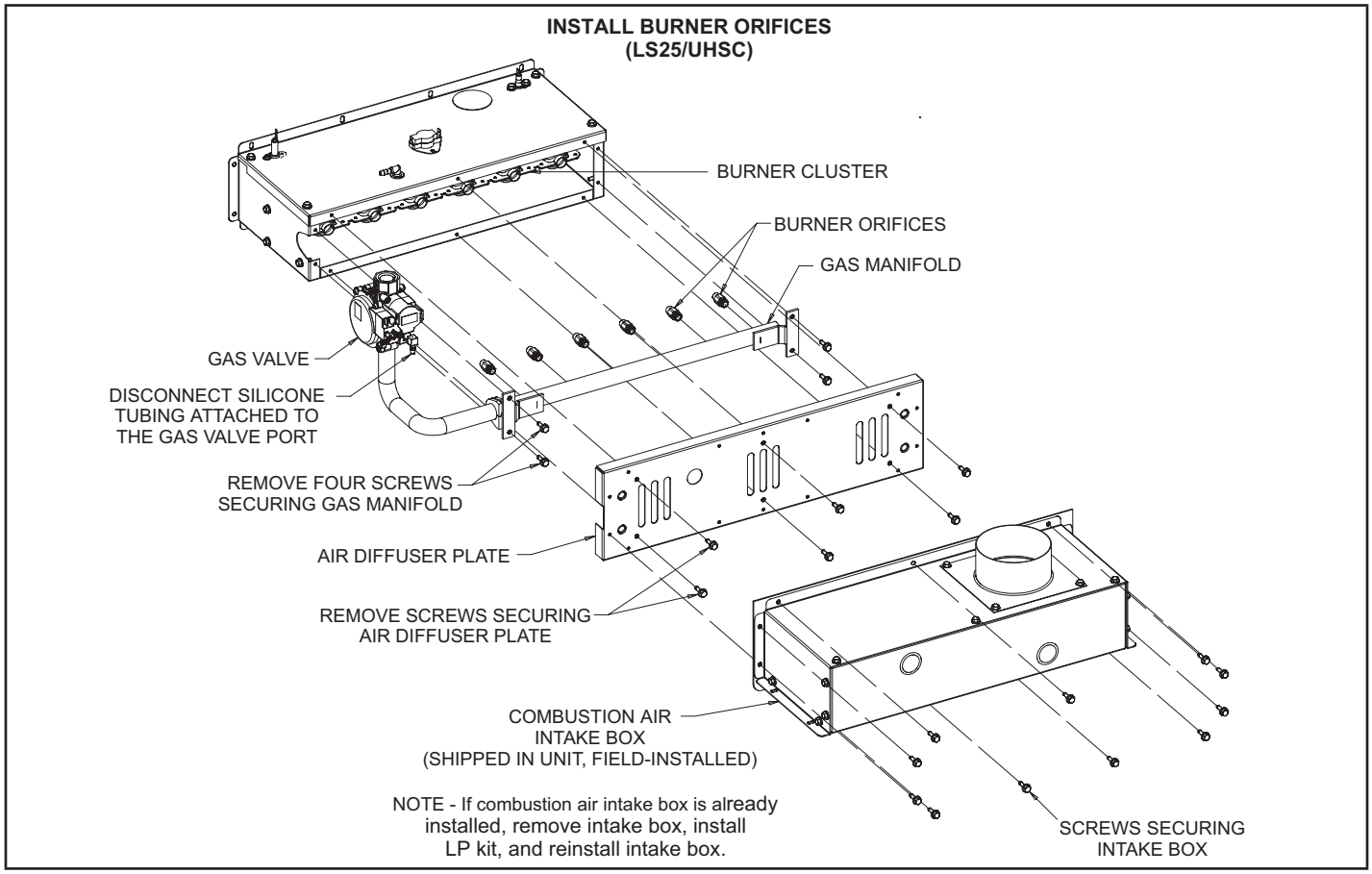


**Figure 2**

**WHITE RODGERS 36G GAS VALVE CONVERSION**

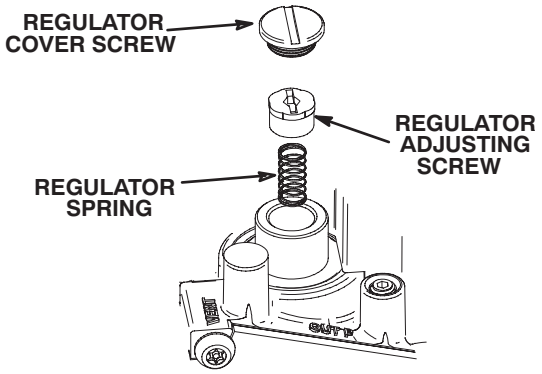


1– Remove pressure regulator adjusting cover screw.

2– Remove pressure regulator adjusting screw beneath cover screw.

3– Remove pressure regulator spring from regulator housing.

4– Insert the stronger spring contained in this kit into the regulator housing.

5– Replace the pressure regulator adjusting screw. Adjust outlet pressure to heating unit manufacturer's LP specifications.

6– Replace pressure regulator adjust cover screw.

7– Attach caution label contained in envelope to gas valve where it can be readily seen. Also attach the small round label to top of regulator adjusting cover screw.

**Figure 3**

## ⚠ CAUTION

Some soaps used for leak detection are corrosive to certain metals. Carefully rinse piping thoroughly after leak test has been completed. Do not use matches, candles, flame or other sources of ignition to check for gas leaks.

## Start-Up and Adjustment

BEFORE LIGHTING, smell all around the appliance area for gas. Be sure to smell next to the floor because some gas is heavier than air and will settle on the floor.

Use only your hand to move the lever/switch. Never use tools. If the lever/switch will not move by hand, do not try to repair it, call a qualified service technician. Force or attempted repair may result in a fire or explosion.

**A - Placing Unit In Operation:**

***IMPORTANT -*** *Follow the lighting instructions provided on the unit. If lighting instructions are not available, see section below.*

UHCM/LF25/UHSC/LS25-125, 150, 175, 200 standard unit heaters are equipped with an automatic spark ignition system. DO NOT attempt to manually light burners on these unit heaters. Each time thermostat calls for heat, the burners will automatically be lit.

1 - Make sure thermostat is set below room temperature and power is turned off to unit.

2 - This appliance is equipped with an ignition device which automatically lights the burners. DO NOT try to light the burners by hand.

3 - Move the gas valve lever/switch to OFF. Do not force.

4 - Wait 15 minutes to clear out any gas. If you then smell gas, immediately call your gas supplier from an outside phone. Follow the gas supplier's instructions. If you do not smell gas go to next step.

5 - Move the gas valve lever/switch to ON.

6 - Turn on all electrical power to unit.

7 - Set thermostat to desired setting.

***NOTE -*** *When unit is initially started, steps 1 through 7 may need to be repeated to purge air from gas line.*

**B - Gas Pressure Adjustment**

1 - Check gas line supply pressure with unit firing at maximum rate. A minimum of 10.5" w.c. should be maintained.

2 - After gas line pressure has been checked and adjusted, check manifold pressure at the pressure tap on the outlet side of the gas valve. The correct manifold pressure for LP/propane gas is given in table 2 or 3. Refer to figure 2 for gas manifold pressure adjustment screw location.

**C-High Altitude Adjustments**

**Canada Only**

In Canada, units may be fired at full input up to 2000 feet (610m) above sea level. From 2000 feet (610m) to 4500 feet (1372m), the manifold pressure must be adjusted. See table 2 for pressure adjustments.

Certification for installation at altitudes over 4500 feet (1372m) above sea level is the jurisdiction of local authorities. The manufacturer recommends derating four percent per 1000 feet above 4,500 feet. Refer to table 2.

**USA Only**

In the US, units may be fired at full input up to 2000 feet (610m) above sea level. Above 2000 feet (610m), unit must be derated by four percent per 1000 feet for installations above 2000 feet. The derate may be accomplished by adjusting the manifold pressure. See table 3.

**D - Burner**

Start burner and allow to operate for a few minutes. Observe flame. Flame should be predominantly blue (with some yellow), strong and steady. Flame should burn continuously from all burners.

**TABLE 2**
**CANADA - LP/PROPANE GAS MANIFOLD PRESSURES***
**[inch w.g. (kPa)]**

| Altitude in Feet (Meters) | | | | | | |
|---|---|---|---|---|---|---|
| **0-2000 (0- 610)** | **2001-4500 (610-1372)** | **4501-5500 (1372-1676)** | **5501-6500 (1677-2012)** | **6501-7500 (2012-2286)** | **7501-8500 (2286-2591)** | **8501-9500 (2591-2896)** |
| 10.0 (2.49) | 9.1 (2.26) | 8.5 (2.12) | 7.8 (1.94) | 7.2 (1.79) | 9.6 (2.39) | 8.8 (2.19) |
| 1.45 | | | | | #55 | |
| Orifice Size | | | | | | |

*Using appropriate kit shown in table 1.

**TABLE 3**
**US - LP/PROPANE GAS MANIFOLD PRESSURES***
[inch w.g. (kPa)]

| Altitude in Feet (Meters) | | | | | | | | |
|---|---|---|---|---|---|---|---|---|
| **0-2000 (0-610)** | **2001-3000 (610-914)** | **3001-4000 (915-1219** | **4001-5000 (1220-1524)** | **5001-6000 (1524-1829)-** | **6001-7000 (1829-2134)-** | **7001-8000 (2134-2438)** | **8001-9000 (2439-2743)-** | **9001-10000 (2744-3048)** |
| 10.0 (2.49) | 8.8 (2.19) | 8.0 (1.99) | 7.3 (1.82) | 9.7 (2.41) | 8.8 (2.19) | 8.0 (1.99) | 7.3 (1.82) | 9.5 (2.36) |
| 1.45 | | | | #55 | | | | #56 |
| Orifice Size | | | | | | | | |

*Using appropriate kit shown in table 1.

### E - Means To Verify Gas Rate

Input must not exceed amount shown on unit rating plate. In cases where gas is not metered, the service technician performing the conversion will need to supply the meter. Input may then be checked by the following method:

The utility company or LP/propane gas distributor may be contacted for the heating value of the gas. All other appliances should be shut off during the input check. Locate meter just upstream in regulated pressure (10.5" w.c. to 13.0"w.c.). To check the Btu input rate, the dial hand on the gas meter should be timed for at least one revolution, using the one cubic foot dial. To assure accurate measurements, use temperature and pressure correction factors for the meter. To determine the number of seconds required for the flow of one cubic foot of gas, use the following formula:

$$\frac{\text{(BTUH CONTENT) HEATING VALUE OF GAS X 3600}}{\text{UNIT BTUH INPUT}}$$

Example: 2500 BTU gas
Unit input 45,000 BTUH

Seconds for one cubic foot =

$$\frac{2500 \times 3600}{45{,}000} = 200 \text{ seconds}$$

### F - Ignition System

Check the normal operation sequence of the ignition system after conversion. See instruction manual supplied with the unit.

### G - Affix Stickers

1 - Once manifold adjustments are done, record the setting on the conversion label (if not already printed). Use the appropriate conversion label for the high altitude application.
2 - Attach the conversion label next to the nameplate.
3 - Fill out and apply the installer label next to the unit nameplate.