© 2024 Lennox Industries Inc.
Dallas, Texas USA

INSTALLATION INSTRUCTIONS ML193UHE

MERIT® SERIES GAS FURNACE
UPFLOW / HORIZONTAL AIR DISCHARGE

507863-02
04/2024
Supersedes 03/2024

THIS MANUAL MUST BE LEFT WITH THE HOMEOWNER FOR FUTURE REFERENCE

This is a safety alert symbol and should never be ignored. When you see this symbol on labels or in manuals, be alert to the potential for personal injury or death.

CAUTION

As with any mechanical equipment, contact with sharp sheet metal edges can result in personal injury. Take care while handling this equipment and wear gloves and protective clothing.

WARNING

Improper installation, adjustment, alteration, service or maintenance can cause property damage, personal injury or loss of life. Installation and service must be performed by a licensed professional HVAC installer (or equivalent), service agency, or the gas supplier.

Contents

Unit Dimensions - inches (mm) 2
ML193UHEGas Furnace 3
Shipping and Packing List 3
Safety 3
Use of Furnace as a Construction Heater 4
General 5
Combustion, Dilution, Ventilation Air 5
Setting Equipment 8
Filters 13
Duct System 13
Pipe Fittings Specifications 14
Joint Cementing Procedure 15
Venting Practices 16
Gas Piping 33
Electrical 36
Integrated Control 39
Unit Start-Up 41
Gas Pressure Measurement 42
Proper Combustion 43
High Altitude 43
Testing For Combustion Air Non-Direct Vents 44
Other Unit Adjustments 45
Service 46
Repair Parts List 46
Start Up Checklist 48
Blower Data 52

0424
507863-02

Unit Dimensions - inches (mm)

[1] NOTE - 60C size units that require air volumes over 1800 cfm must have one of the following:
1. Single side return air <u>and</u> Optional Return Air Base with transition that must accommodate required 20 x 25 x 1 inch (508 x 635 x 25 mm) air filter to maintain proper velocity.
2. Bottom return air.
3. Return air from both sides.
4. Bottom and one side return air.

See Blower Performance Tables for additional information.

[2] Optional Side Return Air Filter Kit is not for use with the Optional Return Air Base.

Flue Condensate Trap Assembly
Furnished for external field installation on either side of unit. (See installation instructions for additional information.)

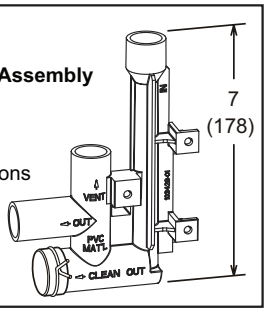

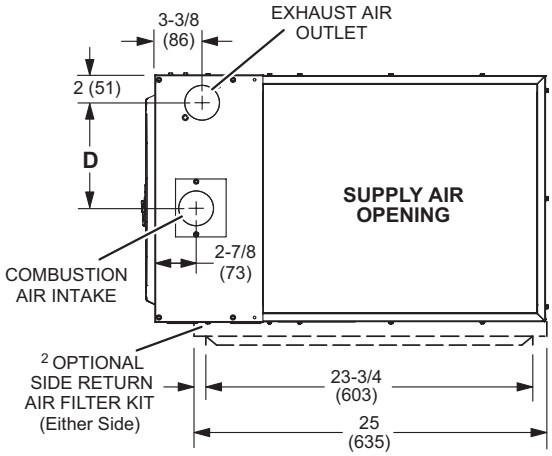

TOP VIEW

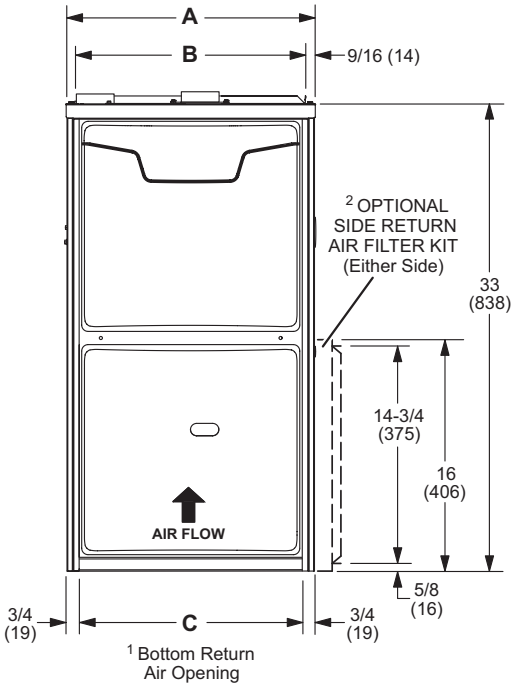

FRONT VIEW

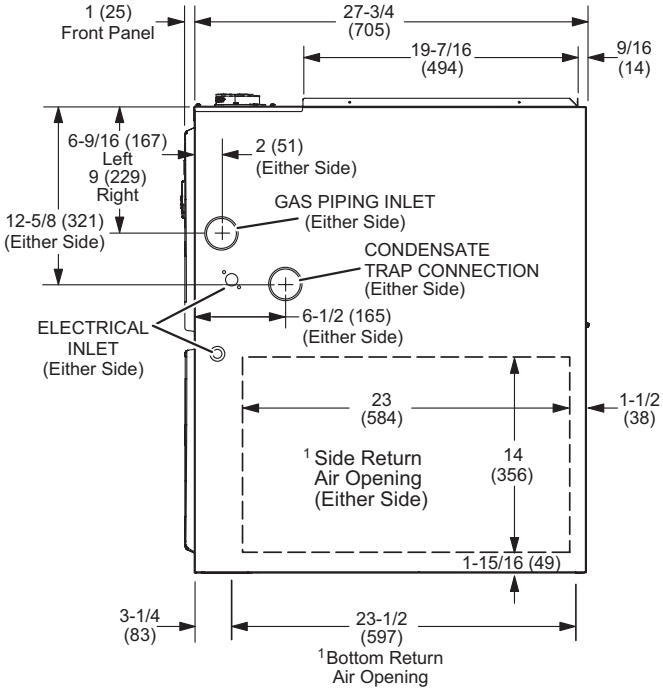

SIDE VIEW

Model No.	A in - mm	B in - mm	C in - mm	D in - mm
030XE36B 045XE36B 070XE36B	17-1/2 - 446	16-3/8 - 416	16 - 406	7-5/8 - 194
090XE36C 090XE48C 110XE48C 110XE60C	21 - 533	19-7/8 - 505	19-1/2 - 495	9-3/8 - 238

ML193UHE Gas Furnace

The ML193UHE Category IV gas furnace is shipped ready for installation in the upflow or horizontal position. The furnace is shipped with the bottom panel in place. The bottom panel must be removed if the unit is to be installed in horizontal or upflow applications with bottom return air.

The ML193UHE can be installed as either a Direct Vent or a Non-Direct Vent gas central furnace.

The furnace is equipped for installation in natural gas applications. A conversion kit (ordered separately) is required for use in propane/LP gas applications.

NOTE - *In Direct Vent installations, combustion air is taken from outdoors and flue gases are discharged outdoors. In Non-Direct Vent installations, combustion air is taken from indoors or ventilated attic or crawlspace and flue gases are discharged outdoors. See "FIGURE 1" and "FIGURE 2" for applications involving roof termination.*

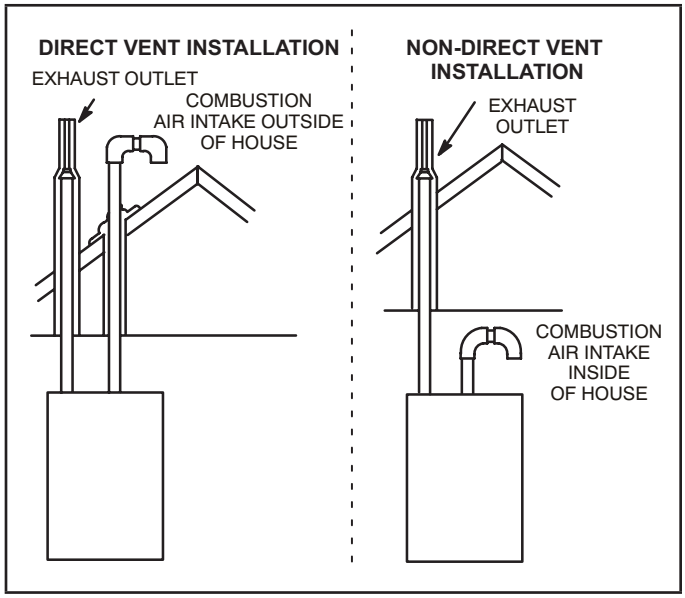

FIGURE 1

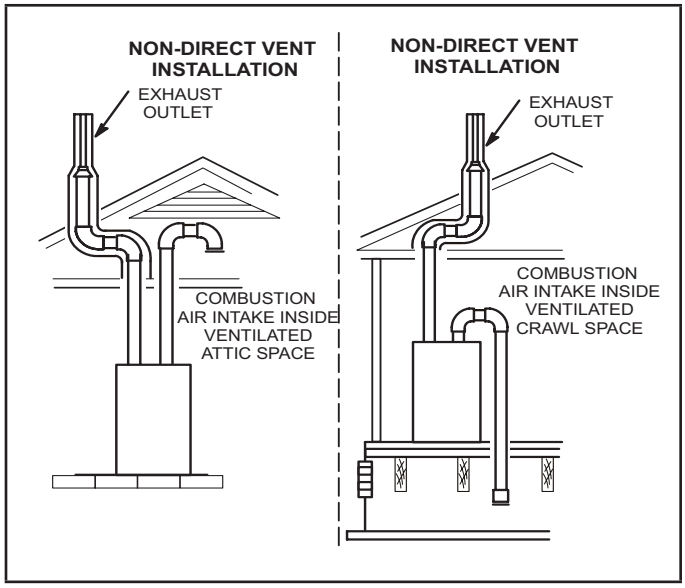

FIGURE 2

Shipping and Packing List

Package 1 of 1 contains

1 - Assembled ML193UHE unit

1 - Bag assembly containing the following:

- 1 - Snap bushing
- 1 - Snap plug
- 1 - Wire tie
- 1 - Condensate trap
- 1 - Condensate trap cap
- 1 - Condensate trap clamp
- 1 - 2" diameter debris screen
- 1 - 3/4" Threaded street elbow

Check equipment for shipping damage. If you find any damage, immediately contact the last carrier.

The following items may also be ordered separately:

1 - Thermostat

1 - Propane/LP changeover kit

1 - Return air base kit

1 - Horizontal suspension kit

Safety Information

⚠ WARNING

Improper installation, adjustment, alteration, service or maintenance can cause property damage, personal injury or loss of life. Installation and service must be performed by a licensed professional HVAC installer (or equivalent), service agency, or the gas supplier.

⚠ DANGER

Danger of explosion.

There are circumstances in which odorant used with LP/propane gas can lose its scent. In case of a leak, LP/propane gas will settle close to the floor and may be difficult to smell. An LP/propane leak detector should be installed in all LP applications.

Use only the type of gas approved for use with this furnace.

Refer to unit nameplate.

ML193UHE units are CSA International certified to ANSI Z21.47 and CSA 2.3 standards.

Building Codes

In the USA, installation of gas furnaces must conform with local building codes. In the absence of local codes, units must be installed according to the current National Fuel Gas Code (ANSI-Z223.1/NFPA 54).

The National Fuel Gas Code is available from the following address:

American National Standards Institute, Inc.

11 West 42nd Street

New York, NY 10036

In Canada, installation must conform with current National Standard of Canada CSA-B149 Natural Gas and Propane Installation Codes, local plumbing or waste water codes and other applicable local codes.

In order to ensure proper unit operation in non-direct vent applications, combustion and ventilation air supply must be provided according to the current National Fuel Gas Code or CSA-B149 standard.

Installation Locations

This furnace is CSA International certified for installation clearances to combustible material as listed on the unit nameplate and in the table in "FIGURE 12". Accessibility and service clearances must take precedence over fire protection clearances.

NOTE - *For installation on combustible floors, the furnace shall not be installed directly on carpeting, tile, or other combustible material other than wood flooring.*

For installation in a residential garage, the furnace must be installed so that the burner(s) and the ignition source are located no less than 18 inches (457 mm) above the floor. The furnace must be located or protected to avoid physical damage by vehicles. When a furnace is installed in a public garage, hangar, or other building that has a hazardous atmosphere, the furnace must be installed according to recommended good practice requirements and current National Fuel Gas Code or CSA B149 standards.

NOTE - *Furnace must be adjusted to obtain a temperature rise within the range specified on the unit nameplate. Failure to do so may cause erratic limit operation and premature heat exchanger failure.*

This ML193UHE furnace must be installed so that its electrical components are protected from water.

Installed in Combination with a Cooling Coil

When this furnace is used with cooling coils ("FIGURE 3"), it shall be installed in parallel with, or on the upstream side of, cooling coils to avoid condensation in the heating compartment. With a parallel flow arrangement, a damper (or other means to control the flow of air) must adequately prevent chilled air from entering the furnace. If the damper is manually operated, it must be equipped to prevent operation of either the heating or the cooling unit, unless it is in the full **HEAT or COOL** setting.

When installed, this furnace must be electrically grounded according to local codes. In addition, in the United States, installation must conform with the current National Electric Code, ANSI/NFPA No. 70. The National Electric Code (ANSI/NFPA No. 70) is available from the following address:

National Fire Protection Association

1 Battery March Park

Quincy, MA 02269

In Canada, all electrical wiring and grounding for the unit must be installed according to the current regulations of the Canadian Electrical Code Part I (CSA Standard C22.1) and/or local codes.

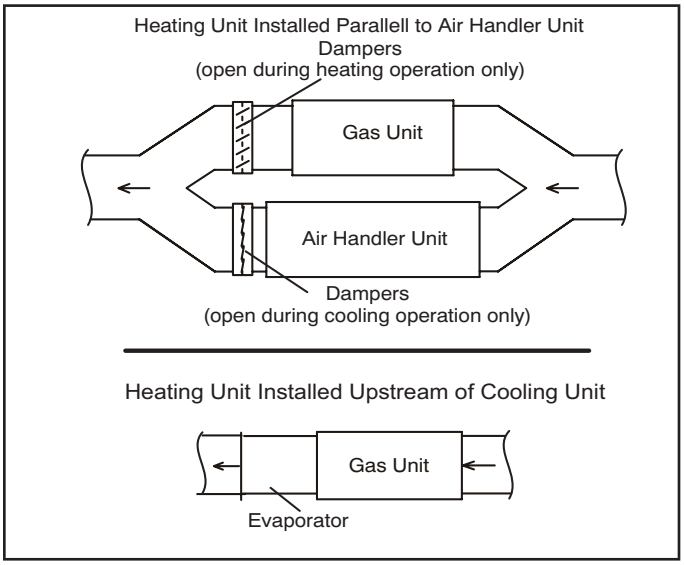

FIGURE 3

NOTE - *This furnace is designed for a minimum continuous return air temperature of 60°F (16°C) or an intermittent operation down to 55°F (13°C) dry bulb for cases where a night setback thermostat is used. Return air temperature must not exceed 85°F (29°C) dry bulb.*

The ML193UHE furnace may be installed in alcoves, closets, attics, basements, garages, crawl spaces and utility rooms in the upflow or horizontal position. **This furnace design has not been CSA certified for installation in mobile homes, recreational vehicles, or outdoors.**

Use of Furnace as Construction Heater

Units may be used for heating of buildings or structures under construction, if the following conditions are met to ensure proper operation:

DO NOT USE THE UNIT FOR CONSTRUCTION HEAT UNLESS ALL OF THE FOLLOWING CRITERIA ARE MET:

- Furnace must be in its final location. The vent system must be permanently installed per these installation instructions.
- Furnace must be installed as a two pipe system and one hundred percent (100%) outdoor air must be provided for combustion air requirements during construction.
- A room thermostat must control the furnace. The use of fixed jumpers that will provide continuous heating is prohibited.
- The input rate and temperature rise must be set per the furnace rating plate.
- Supply and Return air ducts must be provided and sealed to the furnace. Return air must be terminated outside of the space where furnace is installed.
- The refrigerant leak detection sensor must be inspected for dust/debris deposits. Please refer to the evaporator coil and/or refrigerant detection sensor kit instructions for additional information.

- Return air temperature range between 60°F (16°C) and 80°F (27°C) must be maintained.
- MERV 11 or greater air filters must be installed in the system and must be regularly inspected and maintained (e.g., regular static checks and replaced at end of life) during construction.
- Blower and vestibule access panels must be in place on the furnace at all times.
- The furnace heat exchanger, components, duct system, and evaporator coils must be thoroughly cleaned following final construction clean−up.
- Air filters must be replaced upon construction completion.
- All furnace operating conditions (including ignition, input rate, temperature rise and venting) must be verified in accordance with these installation instructions.

EQUIPMENT MAY EXPERIENCE PREMATURE COMPONENT FAILURE AS A RESULT OF FAILURE TO FOLLOW THE ABOVE INSTALLATION INSTRUCTIONS. FAILURE TO FOLLOW THE ABOVE INSTALLATION INSTRUCTIONS VOIDS THE MANUFACTURER'S EQUIPMENT LIMITED WARRANTY. LENNOX DISCLAIMS ALL LIABILITY IN CONNECTION WITH INSTALLER'S FAILURE TO FOLLOW THE ABOVE INSTALLATION INSTRUCTIONS.

NOTWITHSTANDING THE FOREGOING, INSTALLER IS RESPONSIBLE FOR CONFIRMING THAT THE USE OF CONSTRUCTION HEAT IS CONSISTENT WITH THE POLICIES AND CODES OF ALL REGULATING ENTITIES. ALL SUCH POLICIES AND CODES MUST BE ADHERED TO.

General

These instructions are intended as a general guide and do not supersede local codes in any way. Consult authorities having jurisdiction before installation.

In addition to the requirements outlined previously, the following general recommendations must be considered when installing a ML193UHE furnace:

- Place the furnace as close to the center of the air distribution system as possible. The furnace should also be located close to the vent termination point.
- When the furnace is installed in non-direct vent applications, do not install the furnace where drafts might blow directly into it. This could cause improper combustion and unsafe operation.
- When the furnace is installed in non-direct vent applications, do not block the furnace combustion air opening with clothing, boxes, doors, etc. Air is needed for proper combustion and safe unit operation.
- When the furnace is installed in an attic or other insulated space, keep insulation away from the furnace.
- When the furnace is installed in an unconditioned space, consider provisions required to prevent freezing of condensate drain system.
- Please consult the manufacturer of your evaporator coil for their recommendations on distance required between the heat exchanger and their drain pan. Adequate space must be provided between the drain pan and the furnace heat exchanger.

⚠ CAUTION

ML193UHE unit should not be installed in areas normally subject to freezing temperatures.

⚠ WARNING

Insufficient combustion air can cause headaches, nausea, dizziness or asphyxiation. It will also cause excess water in the heat exchanger resulting in rusting and premature heat exchanger failure. Excessive exposure to contaminated combustion air will result in safety and performance related problems. Avoid exposure to the following substances in the combustion air supply:

Permanent wave solutions
Chlorinated waxes and cleaners
Chlorine base swimming pool chemicals
Water softening chemicals
De-icing salts or chemicals
Carbon tetrachloride
Halogen type refrigerants
Cleaning solvents (such as perchloroethylene)
Printing inks, paint removers, varnishes, etc.
Hydrochloric acid
Cements and glues
Antistatic fabric softeners for clothes dryers
Masonry acid washing materials

Combustion, Dilution & Ventilation Air

If the ML193UHE is installed as a Non-Direct Vent Furnace, follow the guidelines in this section.

NOTE - *In Non-Direct Vent installations, combustion air is taken from indoors or ventilated attic or crawlspace and flue gases are discharged out-doors.*

In the past, there was no problem in bringing in sufficient outdoor air for combustion. Infiltration provided all the air that was needed. In today's homes, tight construction practices make it necessary to bring in air from outside for combustion. Take into account that exhaust fans, appliance vents, chimneys, and fireplaces force additional air that could be used for combustion out of the house. Unless outside air is brought into the house for combustion, negative pressure (outside pressure is greater than inside pressure) will build to the point that a downdraft can occur in the furnace vent pipe or chimney. As a result, combustion gases enter the living space creating a potentially dangerous situation.

In the absence of local codes concerning air for combustion and ventilation, use the guidelines and procedures in this section to install ML193UHE furnaces to ensure efficient and safe operation. You must consider combustion air needs and requirements for exhaust vents and gas piping. A portion of this information has been reprinted with permission from the National Fuel Gas Code (ANSIZ223.1/ NFPA 54).

This reprinted material is not the complete and official position of the ANSI on the referenced subject, which is represented only by the standard in its entirety.

In Canada, refer to the CSA B149 installation codes.

⚠ CAUTION

Do not install the furnace in a corrosive or contaminated atmosphere. Meet all combustion and ventilation air requirements, as well as all local codes.

All gas-fired appliances require air for the combustion process. If sufficient combustion air is not available, the furnace or other appliance will operate inefficiently and unsafely. Enough air must be provided to meet the needs of all fuel-burning appliances and appliances such as exhaust fans which force air out of the house. When fireplaces, exhaust fans, or clothes dryers are used at the same time as the furnace, much more air is required to ensure proper combustion and to prevent a downdraft. Insufficient air causes incomplete combustion which can result in carbon monoxide.

In addition to providing combustion air, fresh outdoor air dilutes contaminants in the indoor air. These contaminants may include bleaches, adhesives, detergents, solvents and other contaminants which can corrode furnace components.

The requirements for providing air for combustion and ventilation depend largely on whether the furnace is installed in an unconfined or a confined space.

Unconfined Space

An unconfined space is an area such as a basement or large equipment room with a volume greater than 50 cubic feet (1.42 m3) per 1,000 Btu (.29 kW) per hour of the combined input rating of all appliances installed in that space.

This space also includes adjacent rooms which are not separated by a door. Though an area may appear to be unconfined, it might be necessary to bring in outdoor air for combustion if the structure does not provide enough air by infiltration. If the furnace is located in a building of tight construction with weather stripping and caulking around the windows and doors, follow the procedures in the Air from Outside section.

Confined Space

A confined space is an area with a volume less than 50 cubic feet (1.42 m3) per 1,000 Btu (.29 kW) per hour of the combined input rating of all appliances installed in that space. This definition includes furnace closets or small equipment rooms.

When the furnace is installed so that supply ducts carry air circulated by the furnace to areas outside the space containing the furnace, the return air must be handled by ducts which are sealed to the furnace casing and which terminate outside the space containing the furnace. This is especially important when the furnace is mounted on a platform in a confined space such as a closet or small equipment room.

Even a small leak around the base of the unit at the platform or at the return air duct connection can cause a potentially dangerous negative pressure condition. Air for combustion and ventilation can be brought into the confined space either from inside the building or from outside.

Air from Inside

If the confined space that houses the furnace adjoins a space categorized as unconfined, air can be brought in by providing two permanent openings between the two spaces. Each opening must have a minimum free area of 1 square inch (645 mm2) per 1,000 Btu (.29 kW) per hour of total input rating of all gas-fired equipment in the confined space. Each opening must be at least 100 square inches (64516 mm2). One opening shall be within 12 inches (305 mm) of the top of the enclosure and one opening within 12 inches (305 mm) of the bottom. See “FIGURE 4”.

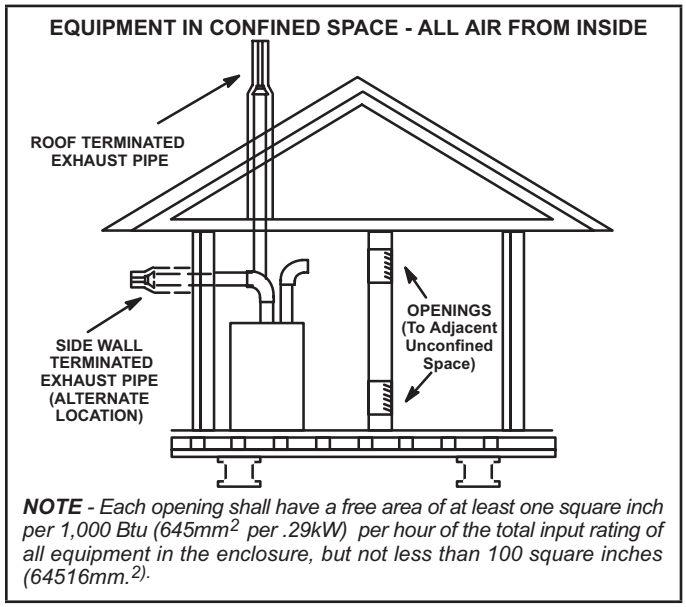

FIGURE 4

Air from Outside

If air from outside is brought in for combustion and ventilation, the confined space shall be provided with two permanent openings. One opening shall be within 12” (305mm) of the top of the enclosure and one within 12” (305mm) of the bottom. These openings must communicate directly or by ducts with the outdoors or spaces (crawl or attic) that freely communicate with the outdoors or indirectly through vertical ducts. Each opening shall have a minimum free area of 1 square inch per 4,000 Btu (645mm2 per 1.17kW) per hour of total input rating of all equipment in the enclosure. When communicating with the outdoors through horizontal ducts, each opening shall have a minimum free area of 1 square inch per 2,000 Btu (645mm2 per .59kW) per total input rating of all equipment in the enclosure (See “FIGURE 5”). It is also permissible to bring in air for combustion from a ventilated attic (“FIGURE 6”) or ventilated crawl space (“FIGURE 7”.

EQUIPMENT IN CONFINED SPACE - ALL AIR FROM OUTSIDE
(Inlet Air from Crawl Space and Outlet Air to Outside)

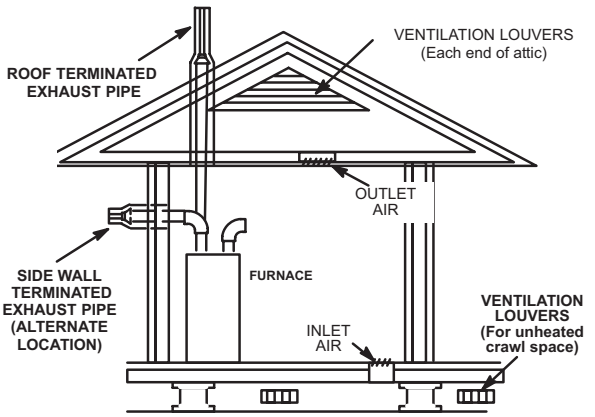

***NOTE**-The inlet and outlet air openings shall each have a free area of at least one square inch per 4,000 Btu (645mm^2 per 1.17kW) per hour of the total input rating of all equipment in the enclosure.*

FIGURE 5

EQUIPMENT IN CONFINED SPACE
(Inlet Air from Ventilated Attic and Outlet Air to Outside)

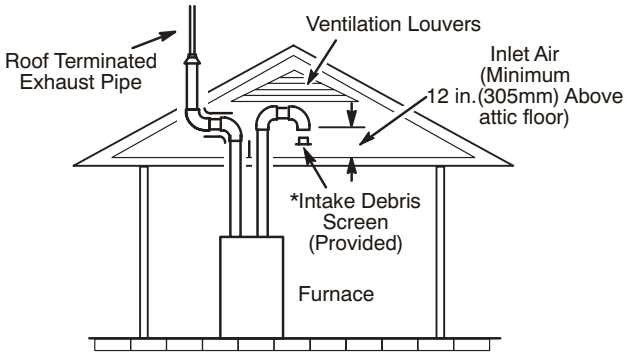

***NOTE**-The inlet and outlet air openings shall each have a free area of at least one square inch per 4,000 Btu (645mm^2 per 1.17kW) per hour of the total input rating of all equipment in the enclosure.*

FIGURE 6

EQUIPMENT IN CONFINED SPACE
(Inlet Air from Ventilated Crawlspace and Outlet Air to Outside)

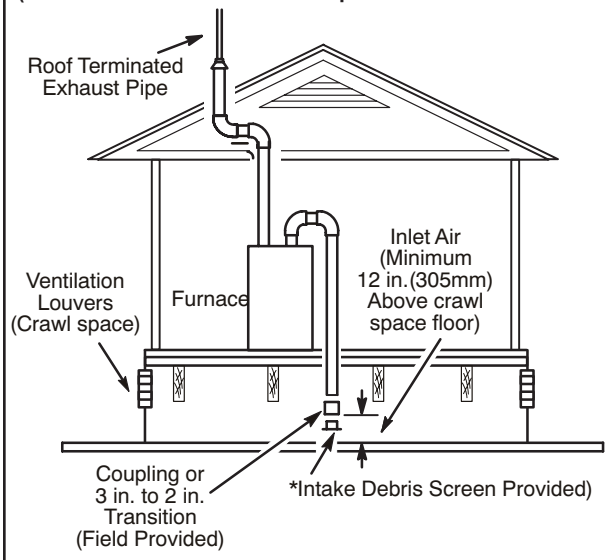

***NOTE**-The inlet and outlet air openings shall each have a free area of at least one square inch per 4,000 Btu (645mm^2 per 1.17kW) per hour of the total input rating of all equipment in the enclosure.*

FIGURE 7

If air from outside is brought in for combustion and ventilation, the confined space must have two permanent openings. One opening shall be within 12 inches (305 mm) of the top of the enclosure and one opening within 12 inches (305 mm) of the bottom. These openings must communicate directly or by ducts with the outdoors or spaces (crawl or attic) that freely communicate with the outdoors or indirectly through vertical ducts. Each opening shall have a minimum free area of 1 square inch (645 mm2) per 4,000 Btu (1.17 kW) per hour of total input rating of all equipment in the enclosure. See “FIGURE 5” and “FIGURE 8”. When communicating with the outdoors through horizontal ducts, each opening shall have a minimum free area of 1 square inch (645 mm2) per 2,000 Btu (.56 kW) per total input rating of all equipment in the enclosure. See “FIGURE 9”.

When ducts are used, they shall be of the same cross-sectional area as the free area of the openings to which they connect. The minimum dimension of rectangular air ducts shall be no less than 3 inches (75 mm). In calculating free area, the blocking effect of louvers, grilles, or screens must be considered. If the design and free area of protective covering is not known for calculating the size opening required, it may be assumed that wood louvers will have 20 to 25 percent free area and metal louvers and grilles will have 60 to 75 percent free area. Louvers and grilles must be fixed in the open position or interlocked with the equipment so that they are opened automatically during equipment operation.

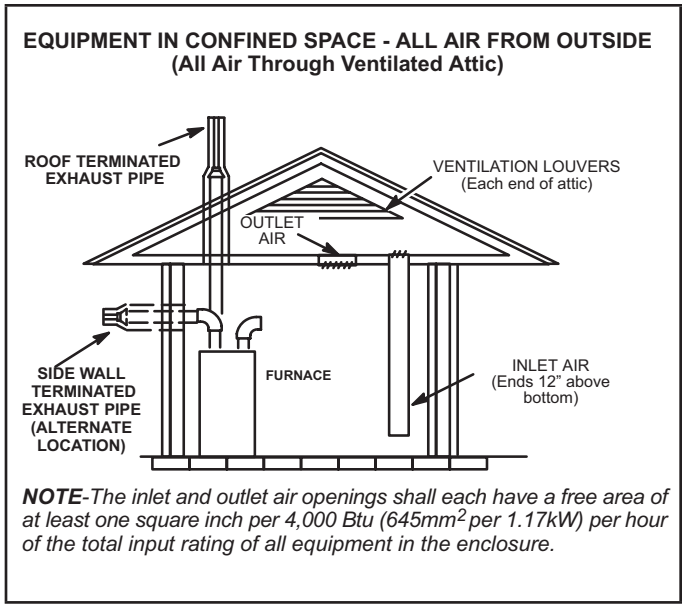

FIGURE 8

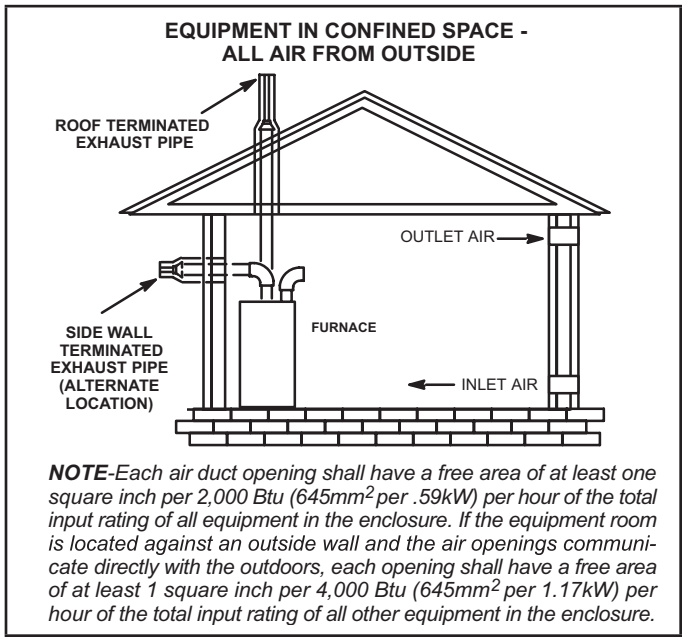

FIGURE 9

Shipping Bolt Removal

Units with 1/2 and 3/4 hp blower motor are equipped with three flexible legs and one rigid leg. The rigid leg is equipped with a shipping bolt and a flat white plastic washer (rather than the rubber mounting grommet used with a flexible mounting leg). See "FIGURE 10". **The bolt and washer must be removed before the furnace is placed into operation.** After the bolt and washer have been removed, the rigid leg will not touch the blower housing.

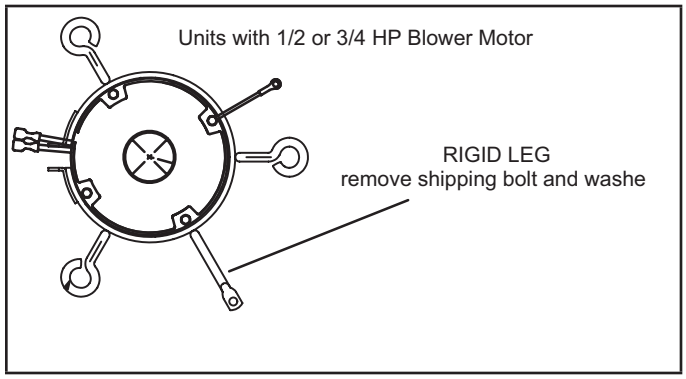

FIGURE 10

Installation - Setting Equipment

⚠ WARNING

Do not connect the return air duct to the back of the furnace. Doing so will adversely affect the operation of the safety control devices, which could result in personal injury or death.

⚠ WARNING

Blower access panel must be securely in place when blower and burners are operating. Gas fumes, which could contain carbon monoxide, can be drawn into living space resulting in personal injury or death.

Upflow Applications

The ML193UHE gas furnace can be installed as shipped in the upflow position. Refer to figure 12 for clearances. Select a location that allows for the required clearances that are listed on the unit nameplate. Also consider gas supply connections, electrical supply, vent connection, condensate trap and drain connections, and installation and service clearances [24 inches (610 mm) at unit front]. ***The unit must be level from side to side. Unit may be positioned from level to 1/2" toward the front to aid in draining. See "FIGURE 11".*** Allow for clearances to combustible materials as indicated on the unit nameplate.

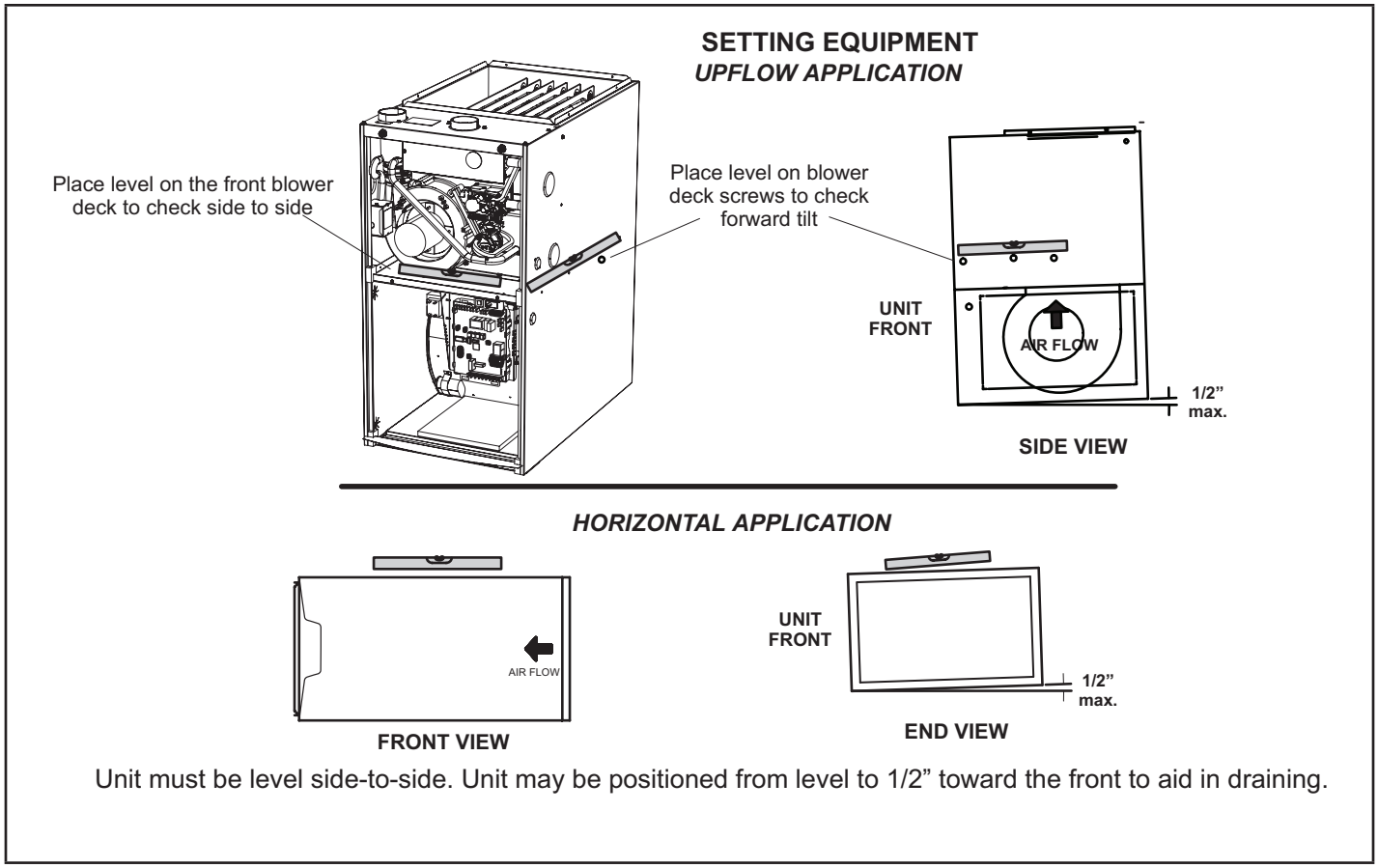
SETTING EQUIPMENT
UPFLOW APPLICATION
Place level on the front blower deck to check side to side
Place level on blower deck screws to check forward tilt
UNIT FRONT
AIR FLOW
1/2" max.
SIDE VIEW
HORIZONTAL APPLICATION
AIR FLOW
FRONT VIEW
UNIT FRONT
1/2" max.
END VIEW
Unit must be level side-to-side. Unit may be positioned from level to 1/2" toward the front to aid in draining.

FIGURE 11

⚠ WARNING

Improper installation of the furnace can result in personal injury or death. Combustion and flue products must never be allowed to enter the return air system or air in the living space. Use sheet metal screws and joint tape to seal return air system to furnace. In platform installations with furnace return, the furnace should be sealed airtight to the return air plenum.

A door must never be used as a portion of the return air duct system. The base must provide a stable support and an airtight seal to the furnace. Allow absolutely no sagging, cracks, gaps, etc. For no reason should return and supply air duct systems ever be connected to or from other heating devices such as a fireplace or stove, etc. Fire, explosion, carbon monoxide poisoning, personal injury and/or property damage could result.

Installation Clearances

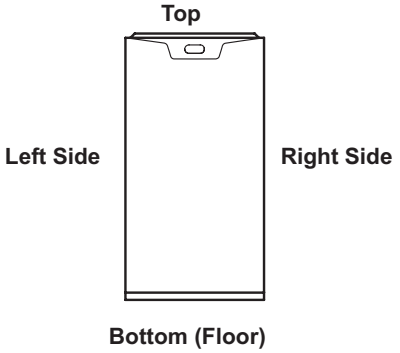

Top/Plenum	1 in. (25 mm)
*Front	0
Back	0
Sides	0†
Vent	0
Floor	0‡

*Front clearance in alcove installation must be 24 in. (610 mm). Maintain a minimum of 24 in. (610 mm) for front service access.
†Allow proper clearances to accommodate condensate trap.
‡For installations on a combustible floor, do not install the furnace directly on carpeting, tile or other combustible materials other than wood flooring.

FIGURE 12

Return Air Guidelines

Return air can be brought in through the bottom or either side of the furnace installed in an upflow application. If the furnace is installed on a platform with bottom return, make an airtight seal between the bottom of the furnace and the platform to ensure that the furnace operates properly and safely. The furnace is equipped with a removable bottom panel to facilitate installation.

Markings are provided on both sides of the furnace cabinet for installations that require side return air. Cut the furnace cabinet at the maximum dimensions shown on page 2.

Refer to Engineering Handbook for additional information.

ML193UHE applications which include side return air and a condensate trap installed on the same side of the cabinet (trap can be installed remotely within 5 ft.) require either a return air base or field-fabricated transition to accommodate an optional IAQ accessory taller than 14.5". See figure 13.

Side Return Air (with transition and filter)

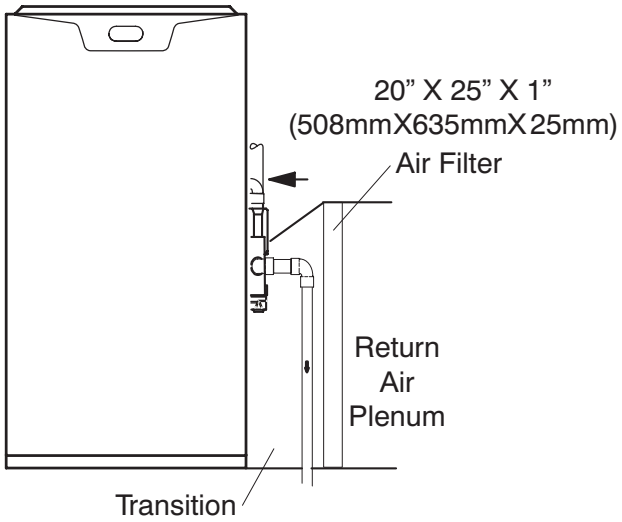

FIGURE 13

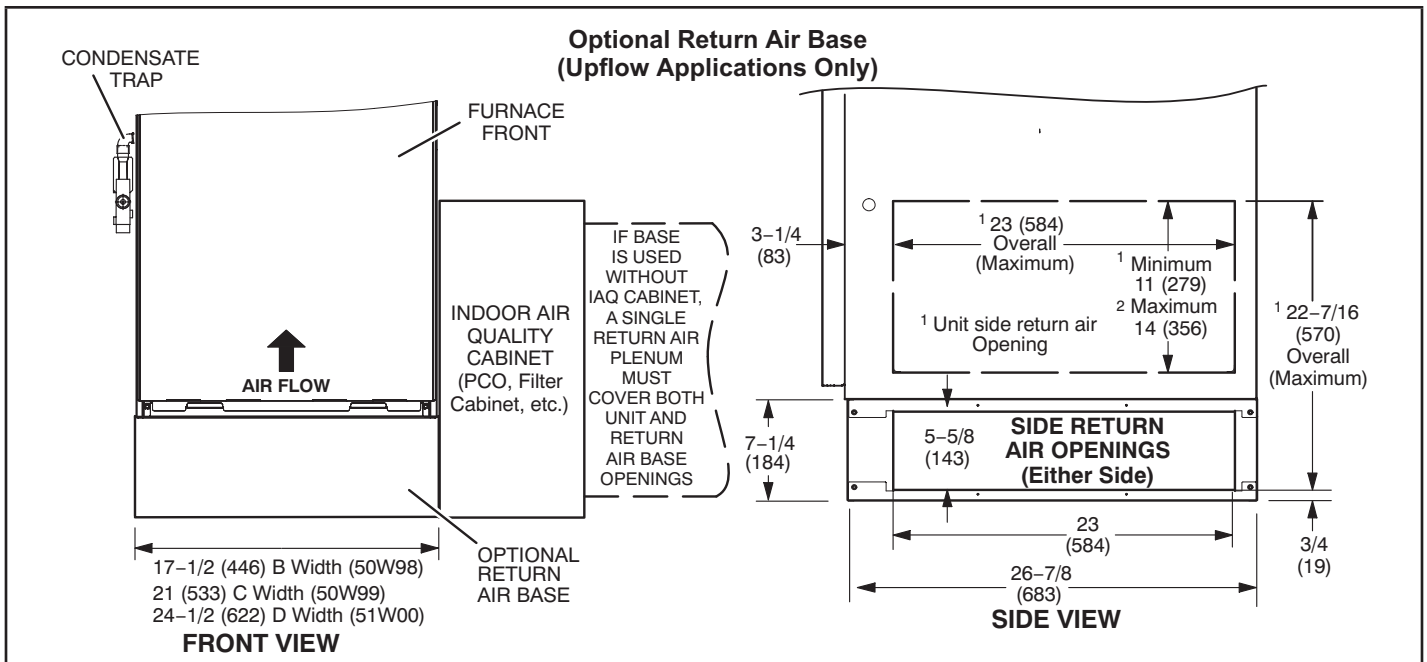

NOTE- Optional side return air filter kits are not for use with return air base.

[1] Both the unit return air opening and the base return air opening must be covered by a single plenum or IAQ cabinet. Minimum unit side return air opening dimensions for units requiring 1800 cfm or more of air (W x H): 23 x 11 in. (584 x 279 mm). The opening can be cut as needed to accommodate plenum or IAQ cabinet while maintaining dimensions shown. Side return air openings must be cut in the field. There are cutting guides stenciled on the cabinet for the side return air opening. The size of the opening must not extend beyond the markings on the furnace cabinet.

[2] To minimize pressure drop, the largest opening height possible (up to 14 inches) is preferred.

FIGURE 14

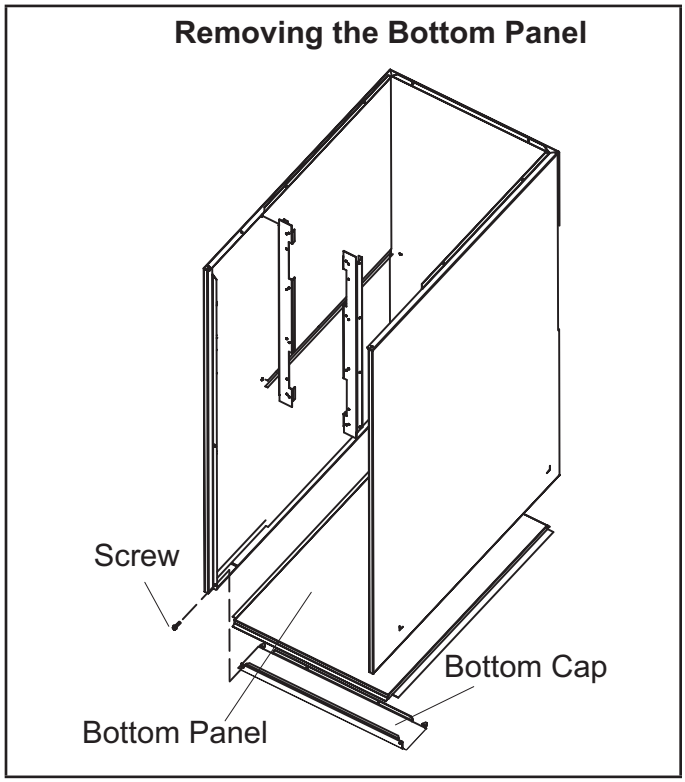

FIGURE 15

Removing the Bottom Panel

Remove the two screws that secure the bottom cap to the furnace. Pivot the bottom cap down to release the bottom panel. Once the bottom panel has been removed, reinstall the bottom cap. See “FIGURE 15”.

Horizontal Applications

⚠ WARNING

Do not install the furnace on its front or back. See “FIGURE 16”.

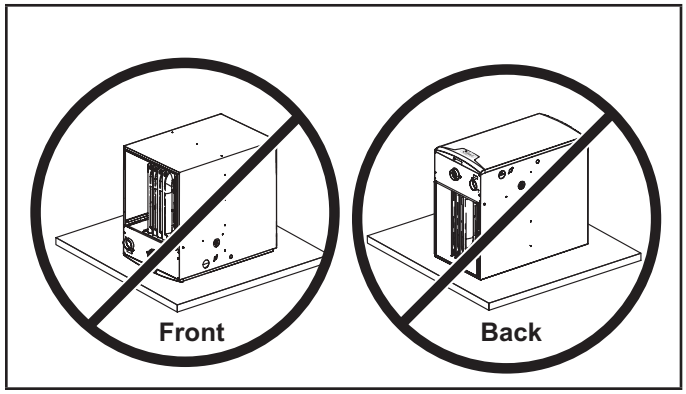

FIGURE 16

The ML193UHE furnace can be installed in horizontal applications with either right- or left-hand air discharge.

Refer to “FIGURE 17” for clearances in horizontal applications.

Horizontal Application Installation Clearances

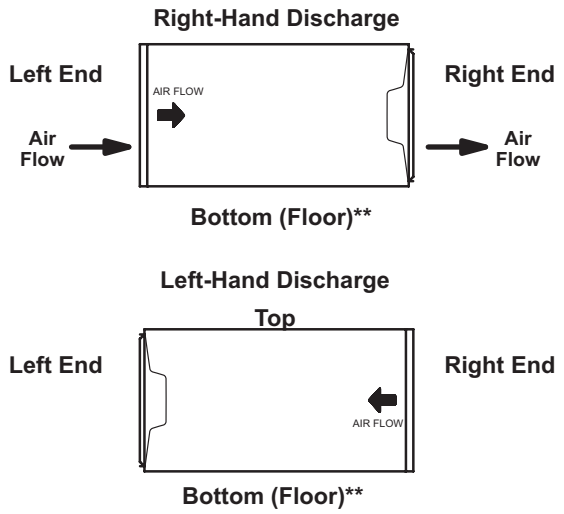

Top	0
Front*	0
Back	0
Ends	0
Vent	0
Floor	0‡

***Front clearance in alcove installation must be 24 in. (610 mm). Maintain a minimum of 24 in. (610 mm) for front service access.**
****An 8” service clearance must be maintained below the unit to provide for servicing of the condensate trap.**
‡For installations on a combustible floor, do not install the furnace directly on carpeting, tile or other combustible materials other than wood flooring.

FIGURE 17

Suspended Installation of Horizontal Unit

This furnace may be installed in either an attic or a crawlspace. Either suspend the furnace from roof rafters or floor joists, as shown in “FIGURE 18”, or install the furnace on a platform, as shown in “FIGURE 19”. A horizontal suspension kit (51W10) may be ordered from Lennox or use equivalent

NOTE - *Heavy-gauge sheet metal straps may be used to suspend the unit from roof rafters or ceiling joists. When straps are used to suspend the unit in this way, support must be provided for both the ends. The straps must not interfere with the plenum or exhaust piping installation.* ***Cooling coils and supply and return air plenums must be supported separately.***

HORIZONTAL SUSPENSION KIT

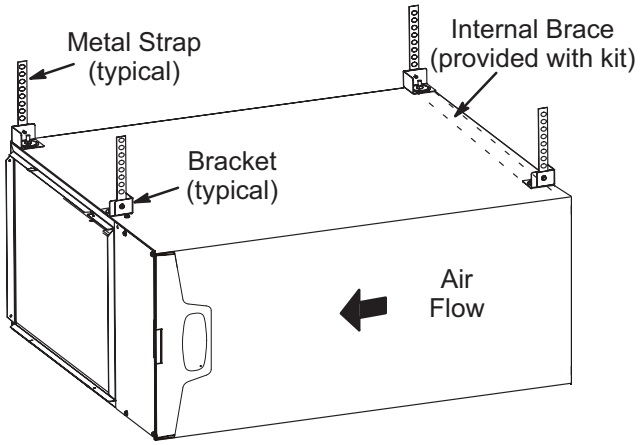

FIGURE 18

NOTE - *When the furnace is installed on a platform or with the horizontal suspension kit in a crawlspace, it must be elevated enough to avoid water damage, accommodate drain trap and to allow the evaporator coil to drain.*

Platform Installation of Horizontal Unit

1 - Select location for unit keeping in mind service and other necessary clearances. See “FIGURE 17”.

2 - Construct a raised wooden frame and cover frame with a plywood sheet. If unit is installed above finished space, fabricate an auxiliary drain pan to be installed under unit. Set unit in drain pan as shown in “FIGURE 19”. Leave 8 inches for service clearance below unit for condensate trap.

3 - Provide a service platform in front of unit. When installing the unit in a crawl space, a proper support platform may be created using cement blocks.

4 - Route auxiliary drain line so that water draining from this outlet will be easily noticed by the homeowner.

5 - If necessary, run the condensate line into a condensate pump to meet drain line slope requirements. The pump must be rated for use with condensing furnaces. Protect the condensate discharge line from the pump to the outside to avoid freezing.

6 - Continue with exhaust, condensate and intake piping installation according to instructions.

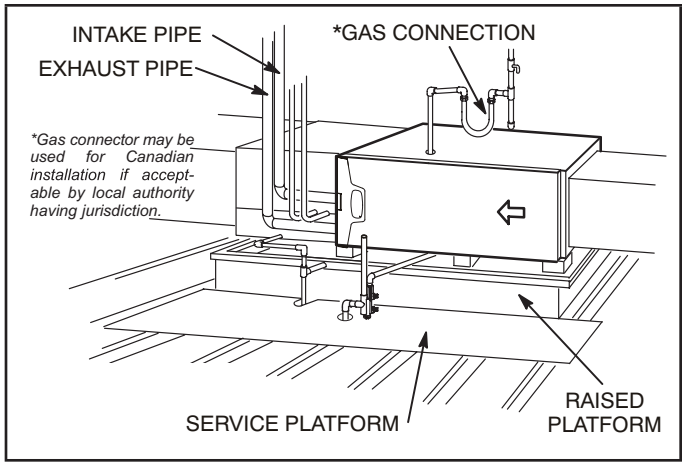

FIGURE 19

Return Air -- Horizontal Applications

Return air may be brought in only through the end of a furnace installed in the horizontal position. The furnace is equipped with a removable bottom panel to facilitate installation. See “FIGURE 15”.

Filters

This unit is not equipped with a filter or rack. A field-provided high velocity rated filter is required for the unit to operate properly. “TABLE 1” lists recommended filter sizes.

A filter must be in place whenever the unit is operating.

⚠ WARNING

If a high efficiency filter is being installed as part of this system to ensure better indoor air quality, the filter must be properly sized. High efficiency filters have a higher static pressure drop than standard efficiency glass/foam filters. If the pressure drop is too great, system capacity and performance may be reduced. The pressure drop may also cause the limit to trip more frequently during the winter and the indoor coil to freeze in the summer, resulting in an increase in the number of service calls.

Before using any filter with this system, check the specifications provided by the filter manufacturer against the data given in the appropriate Lennox Product Specifications bulletin. Additional information is provided in Service and Application Note ACC002 (August 2000).

TABLE 1

Furnace Cabinet Width	Filter Size	
	Side Return	Bottom Return
17-1/2”	16 X 25 X 1 (1)	16 X 25 X 1 (1)
21”	16 X 25 X 1 (1)	20 X 25 X 1 (1)

Duct System

Use industry-approved standards to size and install the supply and return air duct system. Refer to ACCA Manual D. This will result in a quiet and low-static system that has uniform air distribution. See “FIGURE 20” for proper duct installation.

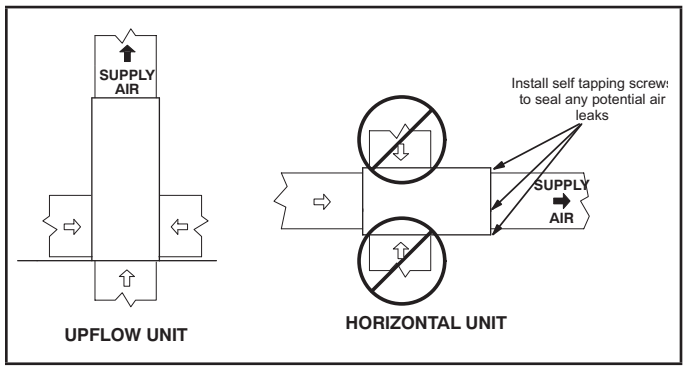

FIGURE 20

NOTE - *This furnace is not certified for operation in heating mode (indoor blower operating at selected heating speed) with an external static pressure which exceeds 0.5 inches w.c. Operation at these conditions may result in improper limit operation.*

Supply Air Plenum

If the furnace is installed without a cooling coil, a removable access panel should be installed in the supply air duct. The access panel should be large enough to permit inspection of the heat exchanger. The furnace access panel must always be in place when the furnace is operating and it must not allow leaks. For horizontal units, install self tapping screws in the three evaporator coil screw holes made for horizontal applications to seal the top cap to the vestibule panel.

Return Air Plenum

NOTE - *Return air must not be drawn from a room where this furnace, or any other gas-fueled appliance (i.e., water heater), or carbon monoxide-producing device (i.e., wood fireplace) is installed.*

When return air is drawn from a room, a negative pressure is created in the room. If a gas appliance is operating in a room with negative pressure, the flue products can be pulled back down the vent pipe and into the room.

This reverse flow of the flue gas may result in incomplete combustion and the formation of carbon monoxide gas. This raw gas or toxic fumes might then be distributed throughout the house by the furnace duct system.

Return air can be brought in through the bottom or either side of the furnace (return air brought into either side furnace allowed in upflow applications only). If a furnace with bottom return air is installed on a platform, make an airtight seal between the bottom of the furnace and the platform to ensure that the unit operates properly and safely. Use fiberglass sealing strips, caulking, or equivalent sealing method between the plenum and the furnace cabinet to ensure a tight seal. If a filter is installed, size the return air duct to fit the filter frame.

Pipe & Fittings Specifications

All pipe, fittings, primer and solvent cement must conform with American National Standard Institute and the American Society for Testing and Materials (ANSI/ASTM) standards. The solvent shall be free flowing and contain no lumps, undissolved particles or any foreign matter that adversely affects the joint strength or chemical resistance of the cement. The cement shall show no gelation, stratification, or separation that cannot be removed by stirring. Refer to the "TABLE 2" below for approved piping and fitting materials

TABLE 2

PIPING AND FITTINGS SPECIFICATIONS

Schedule 40 PVC (Pipe)	D1785
Schedule 40 PVC (Fittings)	D2466
Schedule 40 CPVC (Pipe)	F441
Schedule 40 CPVC (Fittings)	F438
SDR-21 PVC or SDR-26 PVC (Pipe)	D2241
SDR-21 CPVC or SDR-26 CPVC (Pipe)	F442
Schedule 40 ABS (Pipe)	D1527
Schedule 40 ABS (Fittings)	D2468
ABS-DWV (Drain Waste & Vent) (Pipe & Fittings)	D2661
PVC-DWV (Drain Waste & Vent) Pipe & Fittings)	D2665
PRIMER & SOLVENT CEMENT	**ASTM SPECIFICATION**
PVC & CPVC Primer	F656
PVC Solvent Cement	D2564
CPVC Solvent Cement	F493
ABS Solvent Cement	D2235
PVC/CPVC/ABS All Purpose Cement For Fittings & Pipe of the same material	D2564, D2235, F493
ABS to PVC or CPVC Transition Solvent Cement	D3138
CANADA PIPE & FITTING & SOLVENT CEMENT	**MARKING**
PVC & CPVC Pipe and Fittings	ULCS636
PVC & CPVC Solvent Cement	
ABS to PVC or CPVC Transition Cement	
POLYPROPYLENE VENTING SYSTEM	
PolyPro® by Duravent	
InnoFlue® by Centrotherm	
UL 1738 CERTIFIED GAS VENTING SYSTEM	
PEX System1738 Schedule 40 PVC Pipes and Fittings	UL1738
IPEX System1738 PVC FGV Cement & Primer	

⚠ CAUTION

Solvent cements for plastic pipe are flammable liquids and should be kept away from all sources of ignition. Do not use excessive amounts of solvent cement when making joints. Good ventilation should be maintained to reduce fire hazard and to minimize breathing of solvent vapors. Avoid contact of cement with skin and eyes.

⚠ IMPORTANT

ML193UHE exhaust and intake connections are made of PVC. Use PVC primer and solvent cement when using PVC vent pipe. When using ABS vent pipe, use transitional solvent cement to make connections to the PVC fittings in the unit.

Use PVC primer and solvent cement or ABS solvent cement meeting ASTM specifications, refer to "TABLE 2". As an alternate, use all purpose cement, to bond ABS, PVC, or CPVC pipe when using fittings and pipe made of the same materials. Use transition solvent cement when bonding ABS to either PVC or CPVC.

Low temperature solvent cement is recommended during cooler weather. Metal or plastic strapping may be used for vent pipe hangers. Uniformly apply a liberal coat of PVC primer for PVC or use a clean dry cloth for ABS to clean inside socket surface of fitting and male end of pipe to depth of fitting socket.

Canadian Applications Only - *Pipe, fittings, primer and solvent cement used to vent (exhaust) this appliance must be certified to ULC S636 and supplied by a single manufacturer as part of an approved vent (exhaust) system. In addition, the first three feet of vent pipe from the furnace flue collar must be accessible for inspection.*

TABLE 3

OUTDOOR TERMINATION USAGE*

Input Size	Vent Pipe Dia. in.	STANDARD				CONCENTRIC		
		Flush Mount Kit	Wall Kit		Field Fabricated	1-1.2 inch	2 inch	3 inch
			2 inch	3 inch				
		51W11 (US) 51W12 (CA)	22G44 (US) [4]30G28 (CA)	44J40 (US) [4]81J20 (CA)		71M80 (US) [4]44W92 (CA)	69M29 (US) [4]44W92 (CA)	60L46 (US) [4]44W93 (CA)
030, 045	[6]1-1/2	[3]YES	YES	[1]YES	[5]YES	[2]YES		
	2	[3]YES	YES	[1]YES	[5]YES	[2]YES		
	2-1/2	[3]YES	YES	[1]YES	[5]YES	[2]YES		
	3	[3]YES	YES	[1]YES	[5]YES	[2]YES		
070	[6]1-1/2	[3]YES	YES	[1]YES	[5]YES	[2]YES		
	2	[3]YES	YES	[1]YES	[5]YES	[2]YES		
	2-1/2	[3]YES	YES	[1]YES	[5]YES	[2]YES		
	3	[3]YES	YES	[1]YES	[5]YES	[2]YES		
090	2	[3]YES		YES	[5]YES		YES	YES
	2-1/2	[3]YES		YES	[5]YES		YES	YES
	3	[3]YES		YES	[5]YES		YES	YES
110	2	YES		YES	[5]YES		YES	YES
	2-1/2	YES		YES	[5]YES		YES	YES
	3	YES		YES	[5]YES		YES	YES

NOTE - Standard Terminations do not include any vent pipe or elbows external to the structure. Any vent pipe or elbows external to the structure must be included in total vent length calculations. See vent length tables.

* Kits must be properly installed according to kit instructions.

1Requires field-provided outdoor 1-1/2" exhaust accelerator.

2Concentric kits 71M80 and 44W92 include 1-1/2" outdoor accelerator, when uses with 030, 045 and 070 input models. When using 1-1/2 inch vent pipe, transistion to 2" pipe before installing concentric kit.

3 Flush mount kits 51W11 and 51W12 includes 1-1/2 in. outdoor exhaust accelerator, required when used with 030, 045, 070 and 090 input models.When using 1-1/2" vent pipe, transition to 2" pipe before installing flushmount kit.

4 Termination kits 30G28, 44W92, 4493 and 81J20 are certified to ULC S636 for use in Canada only.

5 See table 8 for vent accelerator requirements.

6 Requires field provided 2" to 1-1/2" reducer.

Joint Cementing Procedure

All cementing of joints should be done according to the specifications outlined in ASTM D 2855.

NOTE - *A sheet metal screw may be used to secure the intake pipe to the connector, if desired. Use a drill or self tapping screw to make a pilot hole.*

⚠ DANGER

DANGER OF EXPLOSION!

Fumes from PVC glue may ignite during system check. Allow fumes to dissipate for at least 5 minutes before placing unit into operation..

1 - Measure and cut vent pipe to desired length.

2 - Debur and chamfer end of pipe, removing any ridges or rough edges. If end is not chamfered, edge of pipe may remove cement from fitting socket and result in a leaking joint.

3 - Clean and dry surfaces to be joined.

4 - Test fit joint and mark depth of fitting on outside of pipe.

5 - Uniformly apply a liberal coat of PVC primer for PVC or use a clean dry cloth for ABS to clean inside socket surface of fitting and male end of pipe to depth of fitting socket.

NOTE - *Time is critical at this stage. Do not allow primer to dry before applying cement.*

6 - Promptly apply solvent cement to end of pipe and inside socket surface of fitting. Cement should be applied lightly but uniformly to inside of socket. Take care to keep excess cement out of socket. Apply second coat to end of pipe.

7 - Immediately after applying last coat of cement to pipe, and while both inside socket surface and end of pipe are wet with cement, forcefully insert end of pipe into socket until it bottoms out. Turn PVC pipe 1/4 turn during assembly (but not after pipe is fully inserted) to distribute cement evenly. DO NOT turn ABS or cellular core pipe.

NOTE - *Assembly should be completed within 20 seconds after last application of cement. Hammer blows should not be used when inserting pipe.*

8 - After assembly, wipe excess cement from pipe at end of fitting socket. A properly made joint will show a bead around its entire perimeter. Any gaps may indicate an improper assembly due to insufficient solvent.

9 - Handle joints carefully until completely set.

Venting Practices

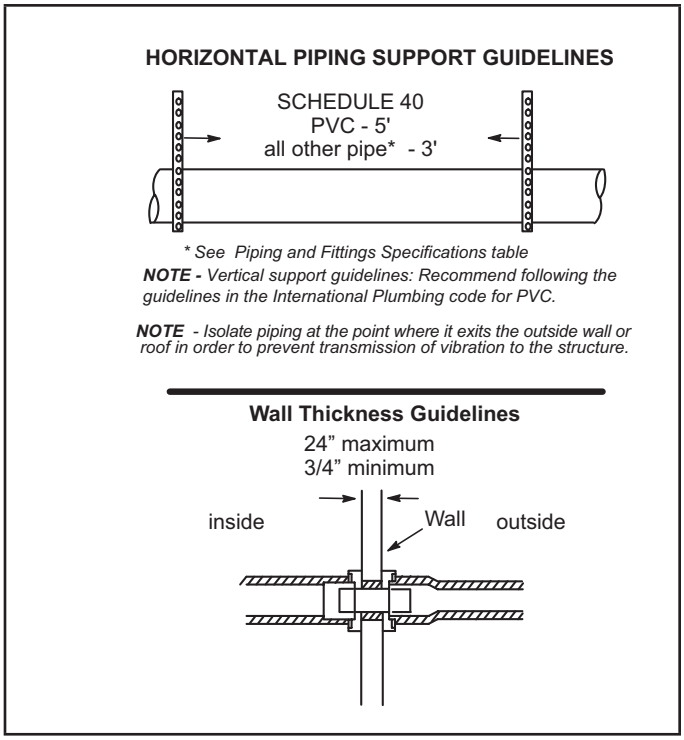

FIGURE 21

1 - In areas where piping penetrates joists or interior walls, hole must be large enough to allow clearance on all sides of pipe through center of hole using a hanger.

2 - When furnace is installed in a residence where unit is shut down for an extended period of time, such as a vacation home, make provisions for draining condensate collection trap and lines.

Exhaust Piping ("FIGURE 25" and "FIGURE 26")

Route piping to outside of structure. Continue with installation following instructions given in piping termination section.

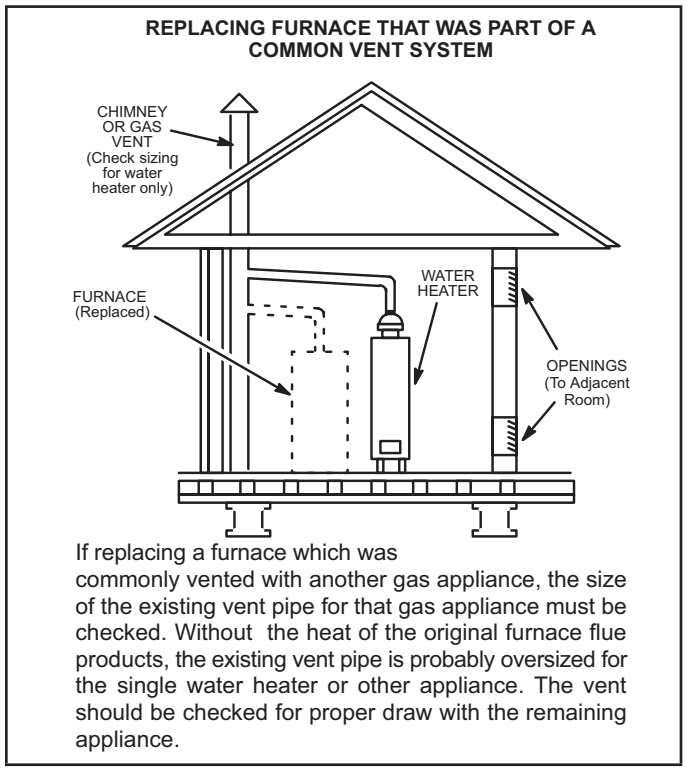

FIGURE 22

⚠ CAUTION

Do not discharge exhaust into an existing stack or stack that also serves another gas appliance. If vertical discharge through an existing unused stack is required, insert PVC pipe inside the stack until the end is even with the top or outlet end of the metal stack.

⚠ CAUTION

The exhaust vent pipe operates under positive pressure and must be completely sealed to prevent leakage of combustion products into the living space.

Vent Piping Guidelines

NOTE - *Lennox has approved the use of DuraVent® and Centrotherm manufactured vent pipe and terminations as an option to PVC. When using the PolyPro® by DuraVent or InnoFlue® by Centrotherm venting system the vent pipe requirements stated in the unit installation instruction – minimum & maximum vent lengths, termination clearances, etc. – apply and must be followed. Follow the instructions provided with PoyPro by DuraVent and InnoFlue by Centrotherm venting system for assembly or if requirements are more restrictive. The PolyPro by Duravent and InnoFlue by Centrotherm venting system must also follow the uninsulated and unconditioned space criteria listed in "TABLE 7".*

The ML193UHE can be installed as either a Non-Direct Vent or a Direct Vent gas central furnace.

NOTE - *In Non-Direct Vent installations, combustion air is taken from indoors and flue gases are discharged outdoors. In Direct Vent installations, combustion air is taken from outdoors and flue gases are discharged outdoors.*

Intake and exhaust pipe sizing -- Size pipe according to TABLE 4 and "TABLE 5". Count all elbows inside and outside the home. TABLE 4 lists the minimum vent pipe lengths permitted. "TABLE 5" lists the maximum pipe lengths permitted. Regardless of the diameter of pipe used, the standard roof and wall terminations described in section *Exhaust Piping Terminations* should be used. Exhaust vent termination pipe is sized to optimize the velocity of the exhaust gas as it exits the termination. Refer to "TABLE 8".

In some applications which permit the use of several different sizes of vent pipe, a combination vent pipe may be used. Contact Lennox' Application Department for assistance in sizing vent pipe in these applications.

NOTE - *The exhaust collar on all models is sized to accommodate 2" Schedule 40 vent pipe. In horizontal applications, any transition to exhaust pipe larger than 2" must be made in vertical runs of the pipe. Therefore a 2" elbow must be added before the pipe is transitioned to any size larger than 2". This elbow must be added to the elbow count used to determine acceptable vent lengths. Contact the Application Department for more information concerning sizing of vent systems which include multiple pipe sizes.*

Horizontal Installation Offset Requirements

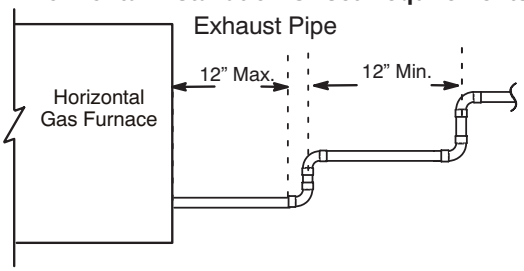

NOTE - *All horizontal runs of exhaust pipe must slope back toward unit. A minimum of 1/4" (6mm) drop for each 12" (305mm) of horizontal run is mandatory for drainage.*
NOTE *- Exhaust pipe MUST be glued to furnace exhaust fitting, unless the optional glueless vent adapter kit 17H92 is used..*
NOTE *- Exhaust piping should be checked carefully to make sure there are no sags or low spots.*

FIGURE 23

NOTE - *Lennox offers a glueless vent adapter kit 17H92 as an option for exhaust exiting at the furnace top cap coupling. If the kit is not used then the exhaust pipe MUST be glued to the furnace exhaust fitting.*

Piping Size Process

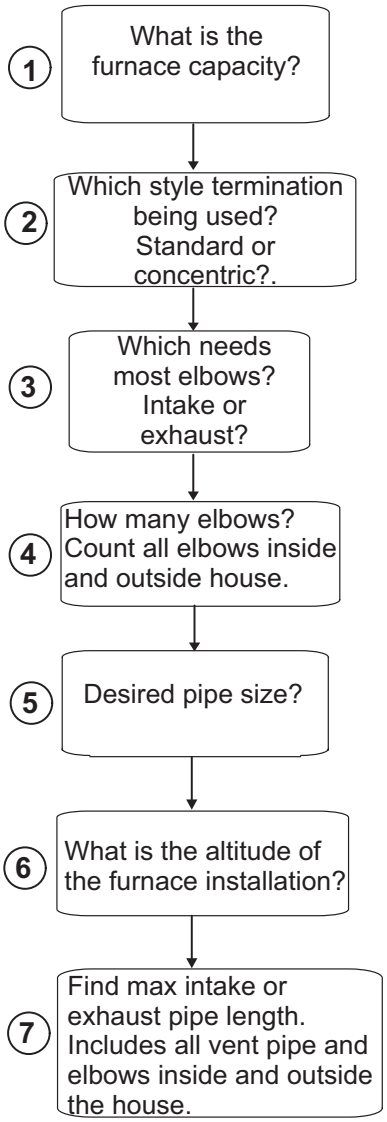

FIGURE 24

⚠ IMPORTANT

Do not use screens or perforated metal in exhaust or intake terminations. Doing so will cause freeze-ups and may block the terminations.

TABLE 4

MINIMUM VENT PIPE LENGTHS

ML193UHE Model	MIN. VENT LENGTH*
030, 045, -070, -090, 110	15 ft. or 5 ft. plus 2 elbows or 10 ft. plus 1 elbow

*Any approved termination may be added to the minimum length listed. Two 45 degree elbows are the equivalent to one 90 degree elbow.

TABLE 5

Maximum Allowable Intake or Exhaust Vent Length in Feet

NOTE - Size intake and exhaust pipe length separately. Values in table are for Intake OR Exhaust, not combined total. Both Intake and Exhaust must be same pipe size.

NOTE - Additional vent pipe and elbows used to terminate the vent pipe outside the structure must be included in the total vent length calculation.

Standard Termination at Elevation 0 - 10,000																
Number Of 90° Elbows Used	1-1/2" Pipe				2" Pipe				2-1/2" Pipe				3" Pipe			
	Model				Model				Model				Model			
	030/045	070	090	110	030/045	070	090	110	030/045	070	090	110	030/045	070	090	110
1	25	20	n/a	n/a	81	66	44	24	115	100	68	43	137	137	118	118
2	20	15			76	61	39	19	110	95	63	38	132	132	113	113
3	15	10			71	56	34	14	105	90	58	33	127	127	108	108
4	10				66	51	29	n/a	100	85	53	28	122	122	103	103
5	n/a				61	46	24		95	80	48	23	117	117	98	98
6					56	41	19		90	75	43	18	112	112	93	93
7					51	36	14		85	70	38	13	107	107	88	88
8					46	31	n/a		80	65	33	n/a	102	102	83	83
9					41	26			75	60	28		97	97	78	78
10					36	21			70	55	23		92	92	73	73
Concentric Termination Elevation 0 - 10,000																
Number Of 90° Elbows Usedl	1-1/2" Pipe				2" Pipe				2-1/2" Pipe				3" Pipe			
	Model				Model				Model				Model			
	030/045	070	090	110	030/045	070	090	110	030/045	070	090	110	030/045	070	090	110
1	20	15	n/a	n/a	73	58	42	22	105	90	64	39	121	121	114	114
2	15	10			68	53	37	17	100	85	59	34	116	116	109	109
3	10	n/a			63	48	32	12	95	80	54	29	111	111	104	104
4	n/a				58	43	27	n/a	90	75	49	24	106	106	99	99
5					53	38	22		85	70	44	19	101	101	94	94
6					48	33	17		80	65	39	14	96	96	89	89
7					43	28	12		75	60	34	n/a	91	91	84	84
8					38	23	n/a		70	55	29		86	86	79	79
9					33	18			65	50	24		81	81	74	74
10					28	13			60	45	19		76	76	69	69

TABLE 6

VENT LENGTHS (EXHAUST) - VENTILATED ATTIC OR CRAWLSPACE INTAKE AIR - FEET

STANDARD TERMINATION AT ELEVATION 0 - 10,000 ft.

	Pipe Size	1-1/2 in.				2 in.				2-1/2 in.				3 in.			
	Input	030/045	070	090	110	030/045	070	090	110	030/045	070	090	110	030/045	070	090	110
No. of 90 ELL	1	20	15	N/A	N/A	71	56	34	14	100	100	78	43	118	117	98	98
	2	15	10	N/A	N/A	66	51	29	9	95	95	73	38	113	112	93	93
	3	10	N/A	N/A	N/A	61	46	24	4	90	90	68	33	108	107	88	88
	4	N/A	N/A	N/A	N/A	56	41	19	N/A	85	85	63	28	103	102	83	83
	5	N/A	N/A	N/A	N/A	51	36	14	N/A	80	80	58	23	98	97	78	78
	6	N/A	N/A	N/A	N/A	46	31	9	N/A	85	75	63	18	93	92	73	73
	7	N/A	N/A	N/A	N/A	41	26	4	N/A	70	70	48	13	88	87	68	68
	8	N/A	N/A	N/A	N/A	36	21	N/A	N/A	65	65	43	8	83	82	63	63
	9	N/A	N/A	N/A	N/A	31	16	N/A	N/A	60	60	38	3	78	77	58	58
	10	N/A	N/A	N/A	N/A	26	11	N/A	N/A	55	55	33	N/A	73	72	53	53

NOTES - Additional vent pipe and elbows used to terminate vent pipe outside the structure must be included in the total vent length calculation.

TYPICAL *EXHAUST AND INTAKE* PIPE CONNECTIONS IN UPFLOW DIRECT OR NON-DIRECT VENT APPLICATIONS

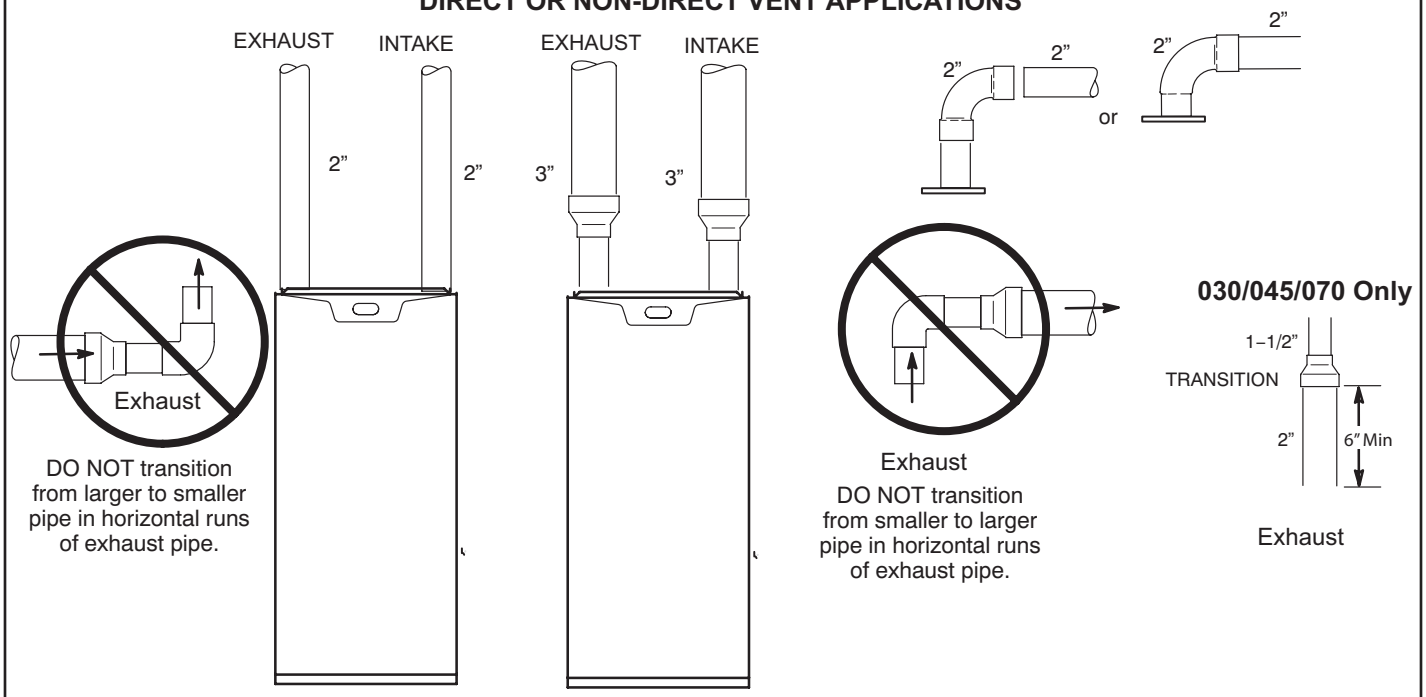

* When transitioning up in pipe size, use the shortest length of 2” PVC pipe possible.
NOTE – Exhaust pipe and intake pipe must be the same diameter.

FIGURE 25

TYPICAL *EXHAUST AND INTAKE* PIPE CONNECTIONS IN HORIZONTAL DIRECT OR NON-DIRECT VENT APPLICATIONS (RIGHT HAND DISCHARGE SHOWN)

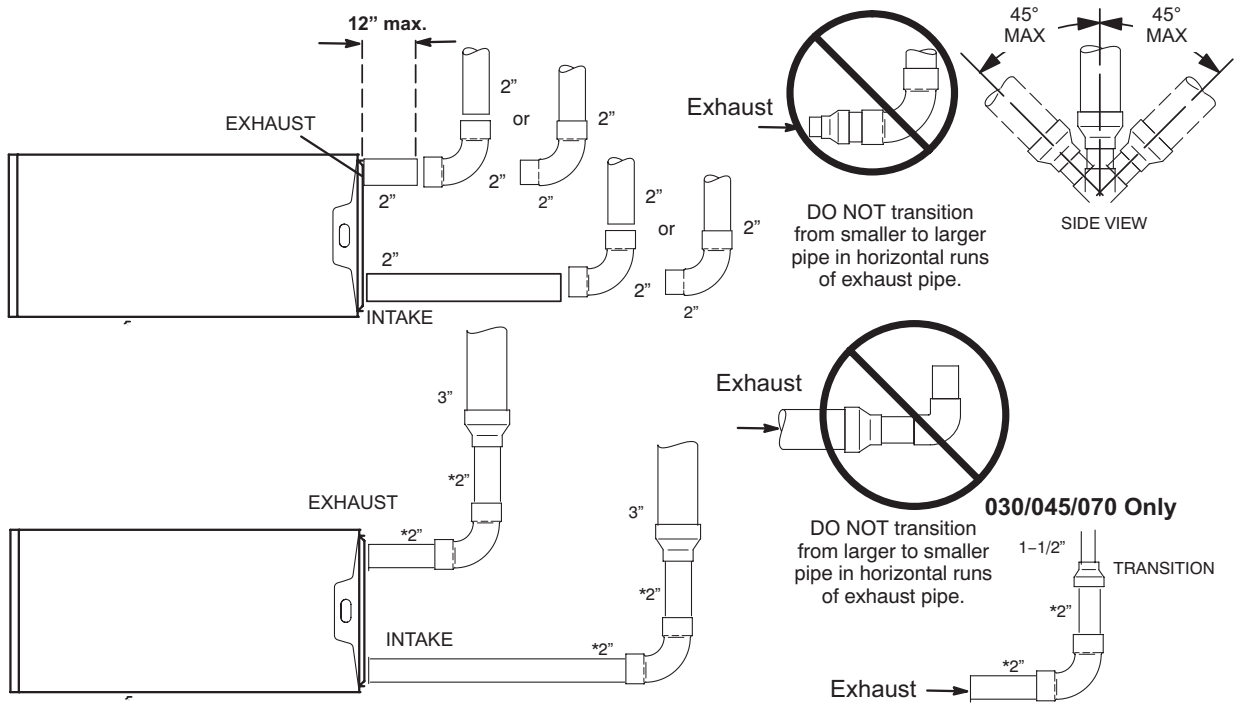

* When transitioning up in pipe size, use the shortest length of 2” PVC pipe possible.
NOTE – Exhaust pipe and intake pipe must be the same diameter.

FIGURE 26

Intake Piping

The ML193UHE furnace may be installed in either direct vent or non-direct vent applications. In non-direct vent applications, when intake air will be drawn into the furnace from the surrounding space, the indoor air quality must be considered and guidelines listed in Combustion, Dilution and Ventilation Air section must be followed.

Follow the next two steps when installing the unit in Direct Vent applications, where combustion air is taken from outdoors and flue gases are discharged outdoors. **The provided air intake screen must not be used in direct vent applications (outdoors).**

1 - Use transition solvent cement or a sheet metal screw to secure the intake pipe to the inlet air connector.

2 - Route piping to outside of structure. Continue with installation following instructions given in general guide lines for piping terminations and intake and exhaust piping terminations for direct vent sections. Refer to “TABLE 5” for pipe sizes.

TYPICAL AIR INTAKE PIPE CONNECTIONS
UPFLOW NON–DIRECT
VENT APPLICATIONS

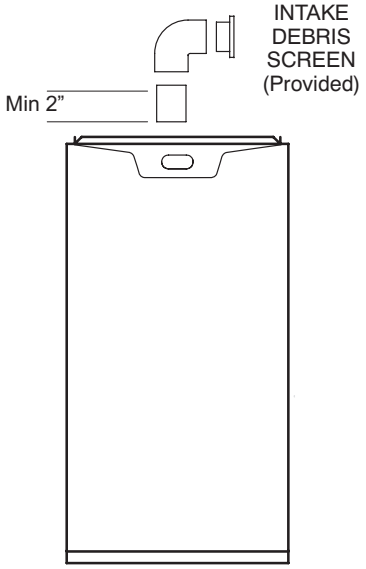

NOTE *- Debris screen and elbow may be rotated, so that screen may be positioned to face forward or to either side.*

FIGURE 27

TYPICAL AIR INTAKE PIPE CONNECTIONS
HORIZONTAL NON–DIRECT VENT APPLICATIONS
(Horizontal Right–Hand Air Discharge Application Shown)

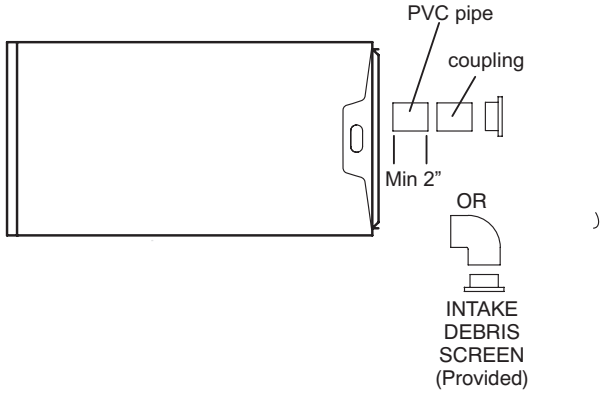

NOTE *- Debris screen may be positioned straight out (preferred) or with an elbow rotated to face down.*

FIGURE 28

Follow the next two steps when installing the unit in Non-Direct Vent applications where combustion air is taken from indoors and flue gases are discharged outdoors.

1 - Use field-provided materials and the factory-provided air intake screen to route the intake piping as shown in “FIGURE 27” or “FIGURE 28”. Maintain a minimum clearance of 3” (76mm) around the air intake opening. The air intake opening (with the protective screen) should always be directed forward or to either side in the upflow position, and either straight out or downward in the horizontal position.

The air intake piping must not terminate too close to the flooring or a platform. Ensure that the intake air inlet will not be obstructed by loose insulation or other items that may clog the debris screen.

2 - If intake air is drawn from a ventilated attic (“FIGURE 29”) or ventilated crawlspace (“FIGURE 30”) the exhaust vent length must not exceed those listed in “TABLE 7”. If 3” diameter pipe is used, reduce to 2” diameter pipe at the termination point to accommodate the debris screen. Use a sheet metal screw to secure the intake pipe to the connector, if desired.

3 - Use a sheet metal screw to secure the intake pipe to the connector, if desired.

⚠ CAUTION

If this unit is being installed in an application with combustion air coming in from a space serviced by an exhaust fan, power exhaust fan, or other device which may create a negative pressure in the space, take care when sizing the inlet air opening. The inlet air opening must be sized to accommodate the maximum volume of exhausted air as well as the maximum volume of combustion air required for all gas appliances serviced by this space.

EQUIPMENT IN CONFINED SPACE
(Inlet Air from Ventilated Attic and Outlet Air to Outside)

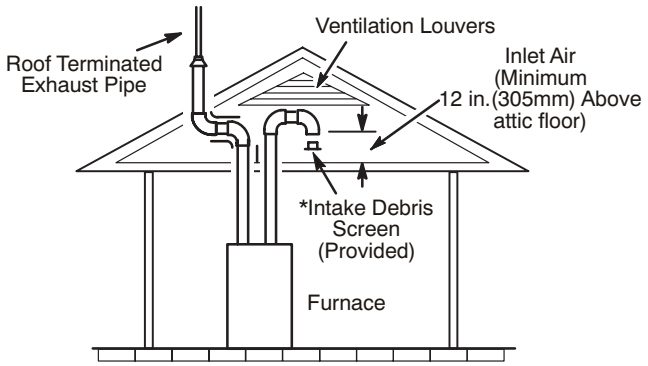

***NOTE**-The inlet and outlet air openings shall each have a free area of at least one square inch per 4,000 Btu (645mm^2 per 1.17kW) per hour of the total input rating of all equipment in the enclosure.*

FIGURE 29

EQUIPMENT IN CONFINED SPACE
(Inlet Air from Ventilated Crawlspace and Outlet Air to Outside)

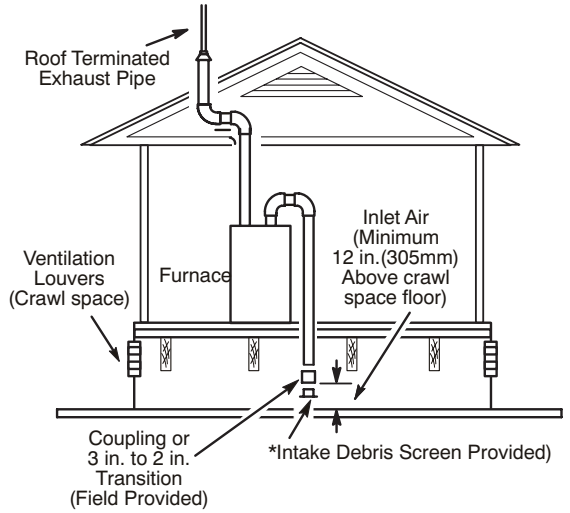

***NOTE**-The inlet and outlet air openings shall each have a free area of at least one square inch per 4,000 Btu (645mm^2 per 1.17kW) per hour of the total input rating of all equipment in the enclosure.*

FIGURE 30

General Guidelines for Vent Terminations

In Non-Direct Vent applications, combustion air is taken from indoors and the flue gases are discharged to the outdoors. The ML193UHE is then classified as a non-direct vent, Category IV gas furnace.

In Direct Vent applications, combustion air is taken from outdoors and the flue gases are discharged to the outdoors. The ML193UHE is then classified as a direct vent, Category IV gas furnace.

In both Non-Direct Vent and Direct Vent applications, the vent termination is limited by local building codes. In the absence of local codes, refer to the current National Fuel Gas Code ANSI Z223-1/NFPA 54 in U.S.A., and current CSA-B149 Natural Gas and Propane Installation Codes in Canada for details.

Position termination according to location given in “FIGURE 32” or “FIGURE 33”. In addition, position termination so it is free from any obstructions and 12” above the average snow accumulation.

At vent termination, care must be taken to maintain protective coatings over building materials (prolonged exposure to exhaust condensate can destroy protective coatings). It is recommended that the exhaust outlet not be located within 6 feet (1.8m) of an outdoor AC unit because the condensate can damage the painted coating.

***NOTE -** See “TABLE 7” for maximum allowed exhaust pipe length without insulation in unconditioned space during winter design temperatures below 32°F (0°C). If required exhaust pipe should be insulated with 1/2” (13mm) Armaflex or equivalent. In extreme cold climate areas, 3/4” (19mm) Armaflex or equivalent may be necessary. Insulation must be protected from deterioration. Armaflex with UV protection is permissable. Basements or other enclosed areas that are not exposed to the outdoor ambient temperature and are above 32 degrees F (0°C) are to be considered conditioned spaces.*

⚠ IMPORTANT

Do not use screens or perforated metal in exhaust terminations. Doing so will cause freeze-ups and may block the terminations.

⚠ IMPORTANT

For Canadian Installations Only:

In accordance to CSA International B149 installation codes, the minimum allowed distance between the combustion air intake inlet and the exhaust outlet of other appliances shall not be less than 12 inches (305mm).

TABLE 7

Maximum Allowable Exhaust Vent Pipe Length (in ft.) Without Insulation In Unconditioned Space For Winter Design Temperatures Single - Stage High Efficiency Furnace

Winter Design Temperatures1 °F (°C)	Vent Pipe Diameter	Unit Input Size									
		030		045		070		090		110	
		PVC	2PP	PVC	2PP	PVC	2PP	PVC	2PP	PVC	2PP
32 to 21 (0 to -6)	1-1/2”	N/A	N/A	25	N/A	20	N/A	N/A	N/A	N/A	N/A
	2 in			18	16	31	28	50	48	30	30
	2-1/2 in			13	N/A	24	N/A	42	N/A	56	N/A
	3 in			9	9	18	18	35	35	47	47
20 to 1 (-7 to -17)	1-1/2”			15	N/A	20	N/A	N/A	N/A	N/A	N/A
	2 in			9	8	18	16	32	29	30	30
	2-1/2 in			5	N/A	13	N/A	24	N/A	34	N/A
	3 in			1	1	8	8	19	19	26	26
0 to -20 (-18 to -29)	1-1/2”			10	N/A	15	N/A	N/A	N/A	N/A	N/A
	2 in			5	3	12	10	22	19	30	27
	2-1/2 in			1	N/A	7	N/A	15	N/A	22	N/A
	3 in			N/A	N/A	2	2	10	10	16	16

1Refer to 99% Minimum Design Temperature table provided in the current edition of the ASHRAE Fundamentals Handbook.

2 Poly-Propylene vent pipe (PP) by Duravent and Centrotherm.

NOTE - Concentric terminations are the equivalent of 5’ and should be considered when measuring pipe length.

NOTE - Maximum uninsulated vent lengths listed may include the termination(vent pipe exterior to the structure) and cannot exceed 5 linear feet or the maximum allowable intake or exhaust vent length listed in table 5 or 6 which ever is less.

NOTE - If insulation is required in an unconditioned space, it must be located on the pipe closest to the furnace. See “FIGURE 31”.

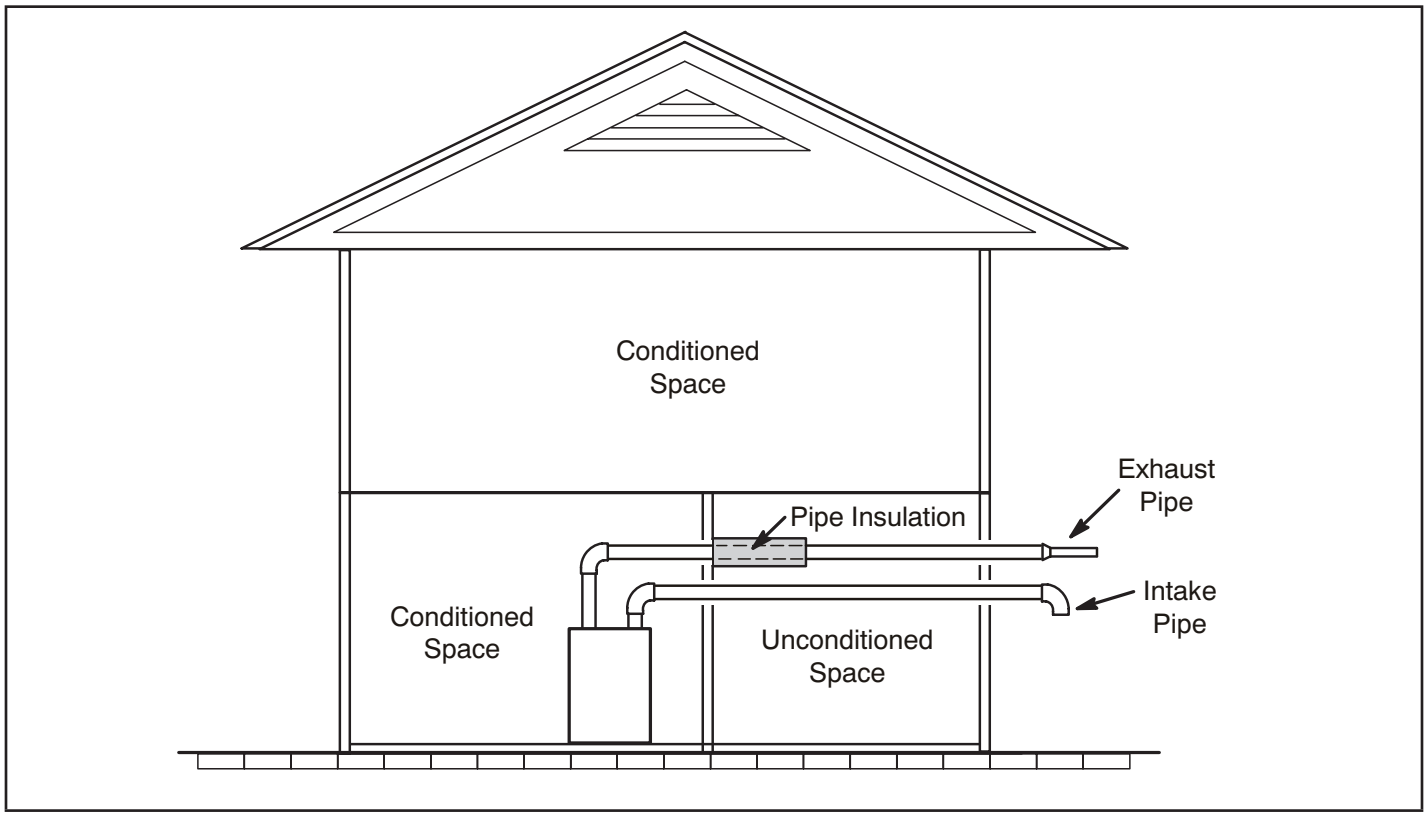

FIGURE 31

VENT TERMINATION CLEARANCES
FOR NON-DIRECT VENT INSTALLATIONS IN THE USA AND CANADA

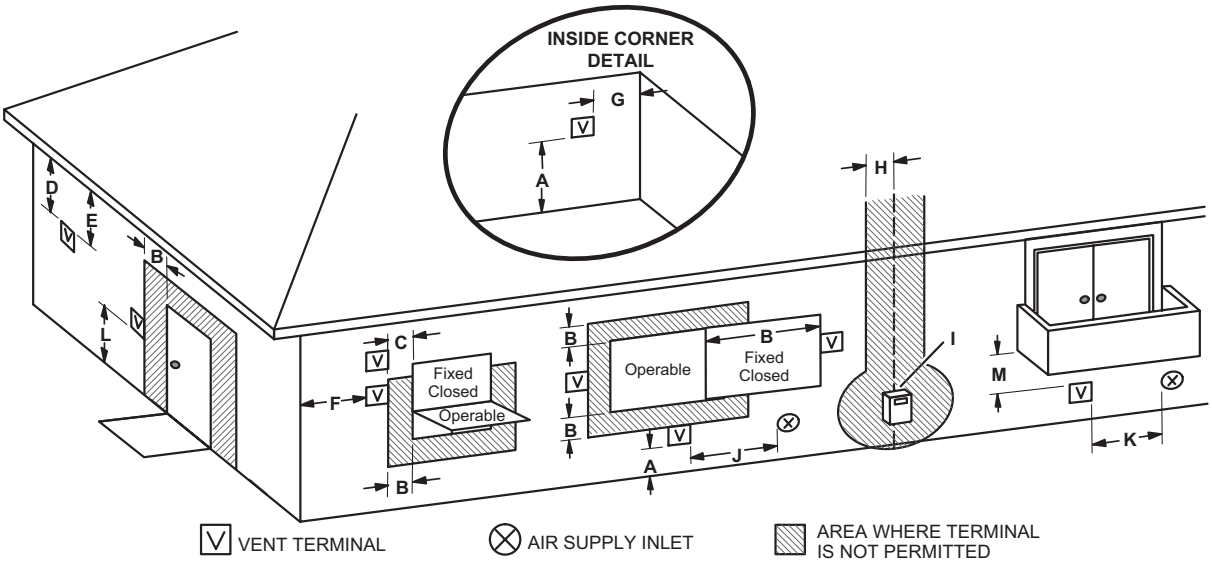

		US Installations[1]	Canadian Installations[2]
A =	Clearance above grade, veranda, porch, deck or balcony	12 inches (305mm) or 12 in. (305mm) above average snow accumulation.	12 inches (305mm) or 12 in. (305mm) above average snow accumulation.
B =	Clearance to window or door that may be opened	4 feet (1.2 m) below or to side of opening; 1 foot (30cm) above opening	6 inches (152mm) for appliances <10,000 Btuh (3kw), 12 inches (305mm) for appliances > 10,000 Btuh (3kw) and <100,000 Btuh (30kw), 36 inches (.9m) for appliances > 100,000 Btuh (30kw)
C =	Clearance to permanently closed window	* 12”	* 12”
D =	Vertical clearance to ventilated soffit located above the terminal within a horizontal distance of 2 feet (610 mm) from the center line of the terminal	* Equal to or greater than soffit depth.	* Equal to or greater than soffit depth.
E =	Clearance to unventilated soffit	* Equal to or greater than soffit depth.	* Equal to or greater than soffit depth.
F =	Clearance to outside corner	* No minimum to outside corner	* No minimum to outside corner
G =	Clearance to inside corner	*	*
H =	Clearance to each side of center line extended above meter / regulator assembly	* 3 feet (.9m) within a height 15 feet (4.5m) above the meter / regulator assembly	3 feet (.9m) within a height 15 feet (4.5m) above the meter / regulator assembly
I =	Clearance to service regulator vent outlet	* 3 feet (.9m)	3 feet (.9m)
J =	Clearance to non-mechanical air supply inlet to building or the combustion air inlet to any other appliance	4 feet (1.2 m) below or to side of opening; 1 foot (30 cm) above opening	6 inches (152mm) for appliances <10,000 Btuh (3kw), 12 inches (305mm) for appliances > 10,000 Btuh (3kw) and <100,000 Btuh (30kw), 36 inches (.9m) for appliances > 100,000 Btuh (30kw)
K =	Clearance to mechanical air supply inlet	3 feet (.9m) above if within 10 feet (3m) horizontally	6 feet (1.8m)
L =	Clearance above paved sidewalk or paved driveway located on public property	7 feet (2.1m)†	7 feet (2.1m)†
M =	Clearance under veranda, porch, deck or balcony	*12 inches (305mm)‡	12 inches (305mm)‡

[1] In accordance with the current ANSI Z223.1/NFPA 54 Natural Fuel Gas Code
[2] In accordance with the current CSA B149.1, Natural Gas and Propane Installation Code
† A vent shall not terminate directly above a sidewalk or paved driveway that is located between two single family dwellings and serves both dwellings.
‡ Permitted only if veranda, porch, deck or balcony is fully open on a minimum of two sides beneath the floor. Lennox recommends avoiding this location if possible.

*For clearances not specified in ANSI Z223.1/NFPA 54 or CSA B149.1, clearance will be in accordance with local installation codes and the requirements of the gas supplier and these installation instructions.”

NOTE - *This figure is intended to illustrate clearance requirement and does not serve as a substitute for locally adopted installation codes.*

FIGURE 32

VENT TERMINATION CLEARANCES
FOR DIRECT VENT INSTALLATIONS IN THE US AND CANADA

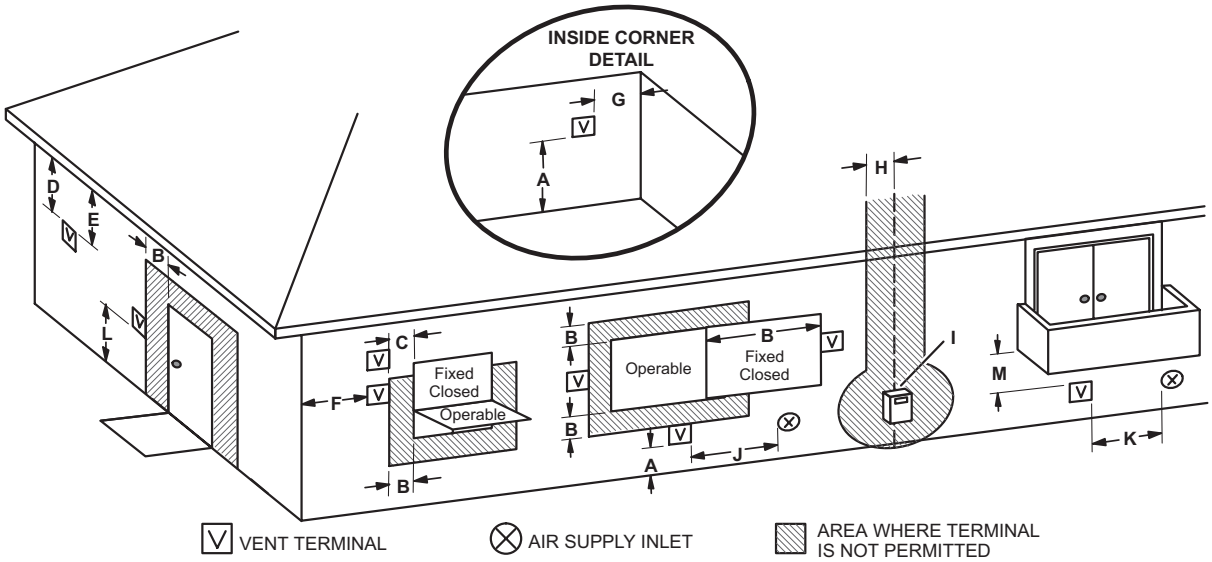

		US Installations[1]	Canadian Installations[2]
A =	Clearance above grade, veranda, porch, deck or balcony	12 inches (305mm) or 12 in. (305mm) above average snow accumulation.	12 inches (305mm) or 12 in. (305mm) above average snow accumulation.
B =	Clearance to window or door that may be opened	6 inches (152mm) for appliances <10,000 Btuh (3kw), 9 inches (228mm) for appliances > 10,000 Btuh (3kw) and <50,000 Btuh (15 kw), 12 inches (305mm) for appliances > 50,000 Btuh (15kw)	6 inches (152mm) for appliances <10,000 Btuh (3kw), 12 inches (305mm) for appliances > 10,000 Btuh (3kw) and <100,000 Btuh (30kw), 36 inches (.9m) for appliances > 100,000 Btuh (30kw)
C =	Clearance to permanently closed window	* 12”	* 12”
D =	Vertical clearance to ventilated soffit located above the terminal within a horizontal distance of 2 feet (610mm) from the center line of the terminal	* Equal to or greater than soffit depth	* Equal to or greater than soffit depth
E =	Clearance to unventilated soffit	* Equal to or greater than soffit depth	* Equal to or greater than soffit depth
F =	Clearance to outside corner	* No minimum to outside corner	* No minimum to outside corner
G =	Clearance to inside corner	*	*
H =	Clearance to each side of center line extended above meter / regulator assembly	3 feet (.9m) within a height 15 feet (4.5m) above the meter / regulator assembly	3 feet (.9m) within a height 15 feet (4.5m) above the meter / regulator assembly
I =	Clearance to service regulator vent outlet	* 3 feet (.9m)	3 feet (.9m)
J =	Clearance to non-mechanical air supply inlet to building or the combustion air inlet to any other appliance	6 inches (152mm) for appliances <10,000 Btuh (3kw), 9 inches (228mm) for appliances > 10,000 Btuh (3kw) and <50,000 Btuh (15 kw), 12 inches (305mm) for appliances > 50,000 Btuh (15kw)	6 inches (152mm) for appliances <10,000 Btuh (3kw), 12 inches (305mm) for appliances > 10,000 Btuh (3kw) and <100,000 Btuh (30kw), 36 inches (.9m) for appliances > 100,000 Btuh (30kw)
K =	Clearance to mechanical air supply inlet	3 feet (.9m) above if within 10 feet (3m) horizontally	6 feet (1.8m)
L =	Clearance above paved sidewalk or paved driveway located on public property	* 7 feet (2.1m)	7 feet (2.1m)†
M =	Clearance under veranda, porch, deck or balcony	*12 inches (305mm)‡	12 inches (305mm)‡

[1] In accordance with the current ANSI Z223.1/NFPA 54 Natural Fuel Gas Code

[2] In accordance with the current CSA B149.1, Natural Gas and Propane Installation Code

† A vent shall not terminate directly above a sidewalk or paved driveway that is located between two single family dwellings and serves both dwellings.

‡ Permitted only if veranda, porch, deck or balcony is fully open on a minimum of two sides beneath the floor. Lennox recommends avoiding this location if possible.

*For clearances not specified in ANSI Z223.1/NFPA 54 or CSA B149.1, clearance will be in accordance with local installation codes and the requirements of the gas supplier and these installation instructions.”

NOTE - *This figure is intended to illustrate clearance requirements and does not serve as a substitute for locally adopted installation codes.*

FIGURE 33

Details of Intake and Exhaust Piping Terminations for Direct Vent Installations

NOTE - *In Direct Vent installations, combustion air is taken from outdoors and flue gases are discharged to outdoors.*

NOTE - *Flue gas may be slightly acidic and may adversely affect some building materials. If any vent termination is used and the flue gases may impinge on the building material, a corrosion-resistant shield (minimum 24 inches square) should be used to protect the wall surface. If the optional tee is used, the protective shield is recommended. The shield should be constructed using wood, plastic, sheet metal or other suitable material. All seams, joints, cracks, etc. in the affected area should be sealed using an appropriate sealant. See "FIGURE 41".*

Intake and exhaust pipes may be routed either horizontally through an outside wall or vertically through the roof. In attic or closet installations, vertical termination through the roof is preferred. "FIGURE 34" through "FIGURE 42" show typical terminations.

1 - Intake and exhaust terminations are not required to be in the same pressure zone. You may exit the intake on one side of the structure and the exhaust on another side ("FIGURE 35"). You may exit the exhaust out the roof and the intake out the side of the structure ("FIGURE 36").

   NOTE - *When venting in different pressure zones, maximum separation of intake and exhaust pipe DO NOT apply.*

2 - Intake and exhaust pipes should be placed as close together as possible at termination end (refer to illustrations). Maximum separation is 3" (76mm) on roof terminations and 6" (152mm) on side wall terminations.

   NOTE - *When venting in different pressure zones, the maximum separation requirement of intake and exhaust pipe DOES NOT apply.*

3 - On roof terminations, the intake piping should terminate straight down using two 90° elbows (See "FIGURE 34").

4 - Exhaust piping must terminate straight out or up as shown. A reducer may be required on the exhaust piping at the point where it exits the structure to improve the velocity of exhaust away from the intake piping. See "TABLE 8".

5 - On field supplied terminations for side wall exit, exhaust piping may extend a maximum of 12 inches (305mm) for 2" PVC and 20 inches (508mm) for 3" (76mm) PVC beyond the outside wall. Intake piping should be as short as possible.

6 - On field supplied terminations, a minimum distance between the end of the exhaust pipe and the end of the intake pipe without a termination elbow is 8" and a minimum distance of 6" with a termination elbow.

   NOTE - *Care must be taken to avoid recirculation of exhaust back into intake pipe.*

TABLE 8

Exhaust Pipe Termination Size Reduction

ML193UHE Model	Termination Pipe Size
*030, *045, *070	1-1/2" (38mm)
*090	2" (51mm)
110	
*Use the provided 1-1/2" accelerator if matched with the flushmount termination.	

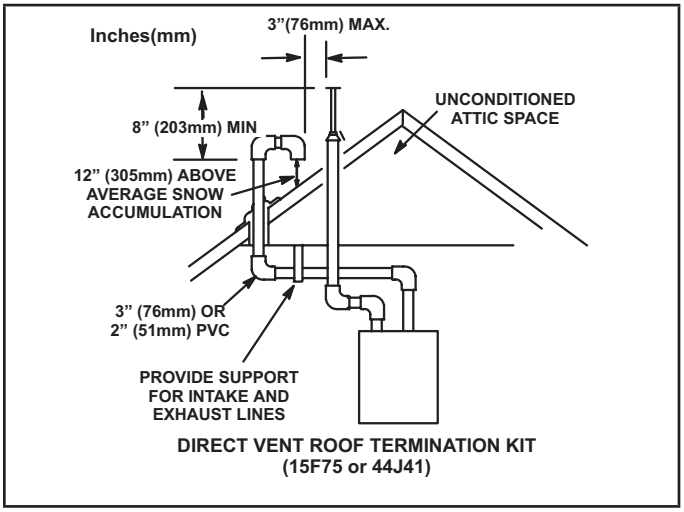

FIGURE 34

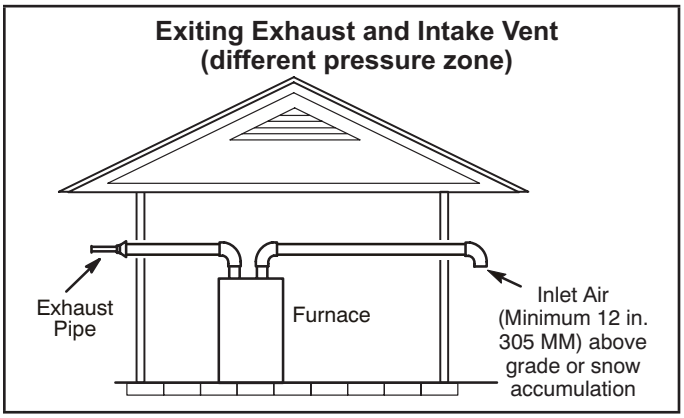

FIGURE 35

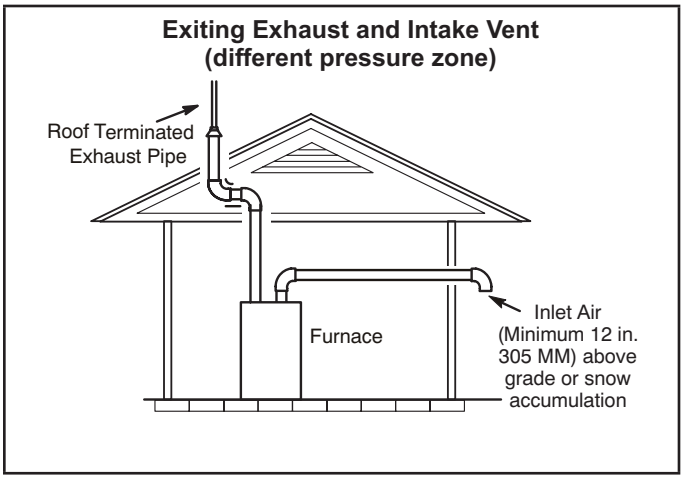

FIGURE 36

7 - If intake and exhaust piping must be run up a side wall to position above snow accumulation or other obstructions, piping must be supported. At least one bracket must be used within 6” from the top of the elbow and then every 24” (610mm) as shown in “FIGURE 41”, to prevent any movement in any direction. When exhaust and intake piping must be run up an outside wall, the exhaust piping must be terminated with pipe sized per “TABLE 8”.The intake piping may be equipped with a 90° elbow turndown. Using turn-down will add 5 feet (1.5m) to the equivalent length of the pipe.

8 - A multiple furnace installation may use a group of up to four terminations assembled together horizontally, as shown in “FIGURE 39”.

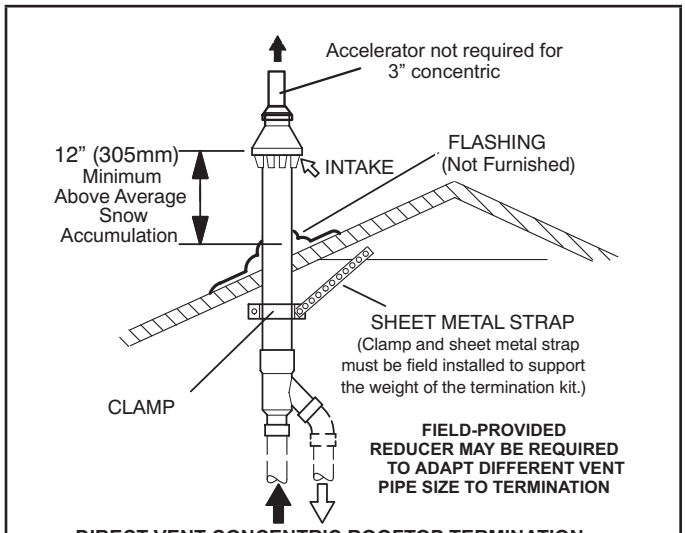

DIRECT VENT CONCENTRIC ROOFTOP TERMINATION
71M80, 69M29 or 60L46 (US)
44W92 or 44W93 (Canada)

FIGURE 37

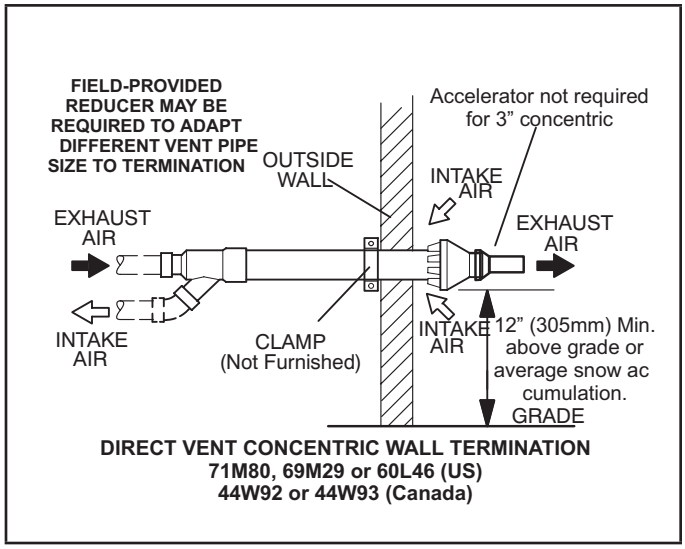

DIRECT VENT CONCENTRIC WALL TERMINATION
71M80, 69M29 or 60L46 (US)
44W92 or 44W93 (Canada)

FIGURE 38

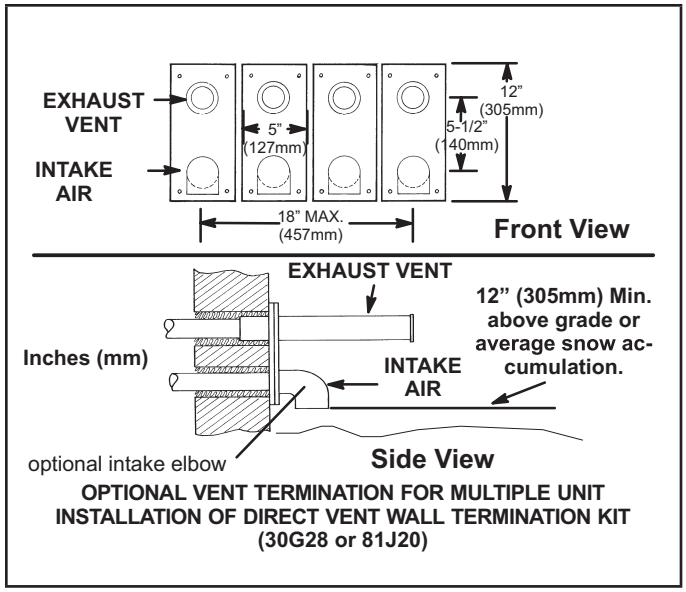

OPTIONAL VENT TERMINATION FOR MULTIPLE UNIT INSTALLATION OF DIRECT VENT WALL TERMINATION KIT (30G28 or 81J20)

FIGURE 39

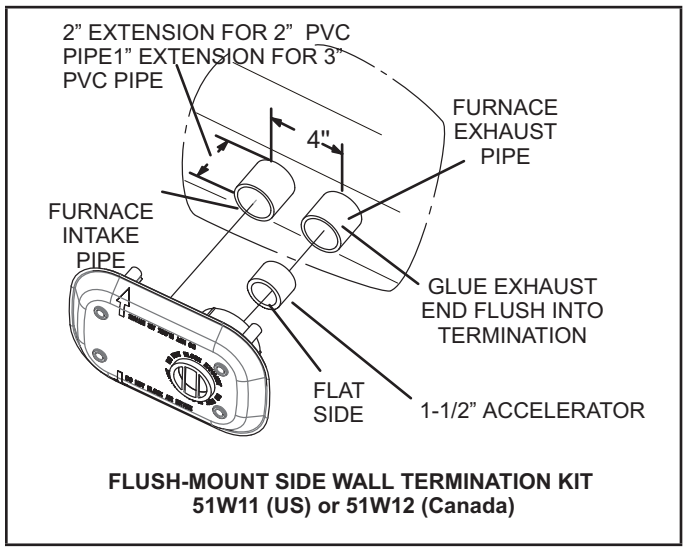

FLUSH-MOUNT SIDE WALL TERMINATION KIT
51W11 (US) or 51W12 (Canada)

FIGURE 40

FIELD FABRICATED WALL TERMINATION

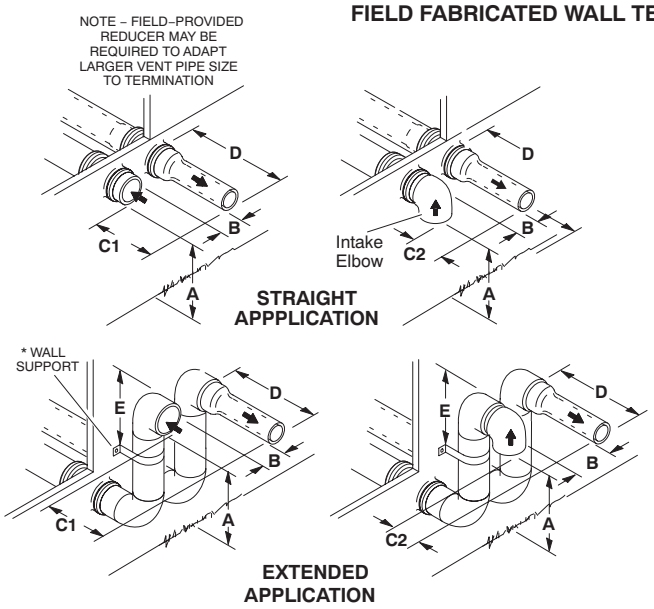

	2” (51mm) Vent Pipe	3” (76mm) Vent Pipe
A– Minimum clearance above grade or average snow accumulation	12” (305 mm)	12” (305 mm)
B– Maximum horizontal separation between intake and exhaust	6” (152 mm)	6” (152 mm)
C1 -Minimum from end of exhaust to inlet of intake	8” (203 mm)	8” (203 mm)
C2 -Minimum from end of exhaust to inlet of intake	6” (152 mm)	6” (152 mm)
D– Maximum exhaust pipe length	12” (305 mm)	20” (508 mm)
E– Maximum wall support distance from top of each pipe (intake/exhaust)	6” (152 mm)	6” (152 mm)

See maximum allowable venting tables for venting lengths with this arrangement.

* Use wall support every 24” (610 mm). Use two wall supports if extension is greater than 24” (610 mm) but less than 48” (1219 mm).

NOTE – One wall support must be within 6” (152 mm) from top of each pipe (intake and exhaust) to prevent movement in any direction.

ALTERNATE TERMINATIONS (TEE & FORTY–FIVE DEGREE ELBOWS ONLY)

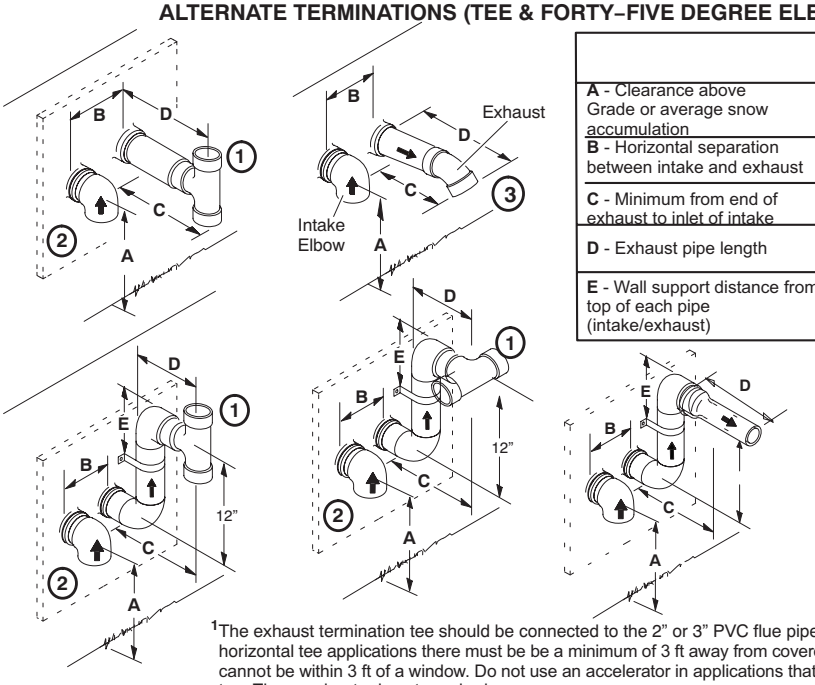

	2” (51mm) Vent Pipe	3” (76mm) Vent Pipe
A - Clearance above Grade or average snow accumulation	12” (305 mm) Min	12” (305 mm) Min
B - Horizontal separation between intake and exhaust	6” (152mm)min 24” (610mm)Max	6” (152mm)min 24” (610mm)Max
C - Minimum from end of exhaust to inlet of intake	9” (227mm)	9” (227mm)
D - Exhaust pipe length	12” (305mm)min 16” (405mm)Max	12” (305mm)min 16” (405mm)Max
E - Wall support distance from top of each pipe (intake/exhaust)	6” (152mm) Max	6” (152mm) Max

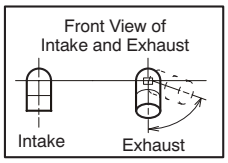

[1]The exhaust termination tee should be connected to the 2” or 3” PVC flue pipe as shown in the illustration. In horizontal tee applications there must be be a minimum of 3 ft away from covered patios or any living ares and cannot be within 3 ft of a window. Do not use an accelerator in applications that include an exhaust termination tee. The accelerator is not required.

[2] As required. Flue gas may be acidic and may adversely affect some building materials. If a side wall vent termination is used and flue gases will impinge on the building materials, a corrosion–resistant shield (24 inches square) should be used to protect the wall surface. If optional tee is used, the protective shield is recommended. The shield should be constructed using wood, sheet metal or other suitable material. All seams, joints, cracks, etc. in affected area, should be sealed using an appropriate sealant.

[3] Exhaust pipe 45° elbow can be rotated to the side away from the combustion air inlet to direct exhaust away from adjacent property. The exhaust must never be directed toward the combustion air inlet.

FIGURE 41

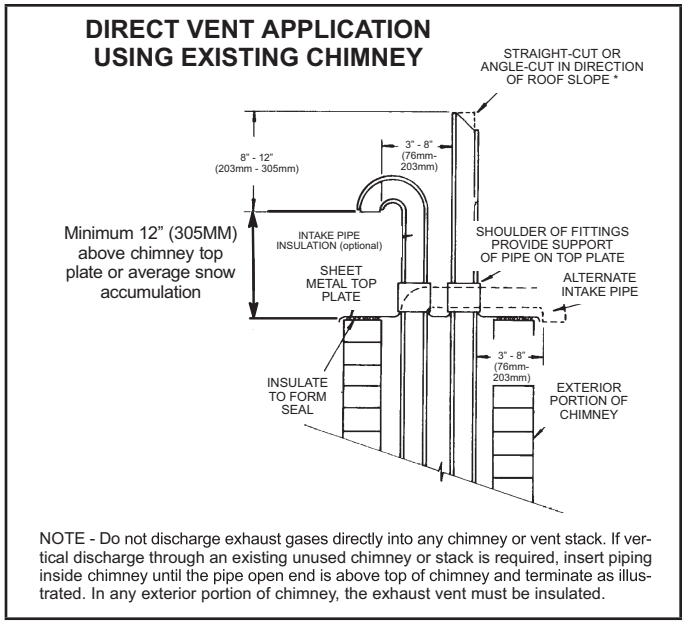

FIGURE 42

Details of Exhaust Piping Terminations for Non-Direct Vent Applications

Exhaust pipes may be routed either horizontally through an outside wall or vertically through the roof. In attic or closet installations, vertical termination through the roof is preferred. “FIGURE 43” and “FIGURE 44” show typical terminations.

1 - Exhaust piping must terminate straight out or up as shown. The termination pipe must be sized as listed in “TABLE 8”.The Specified pipe size ensures proper velocity required to move the exhaust gases away from the building.

2 - On field supplied terminations for side wall exit, exhaust piping may extend a maximum of 12 inches (305mm) for 2” PVC and 20 inches (508mm) for 3” (76mm) PVC beyond the outside wall.

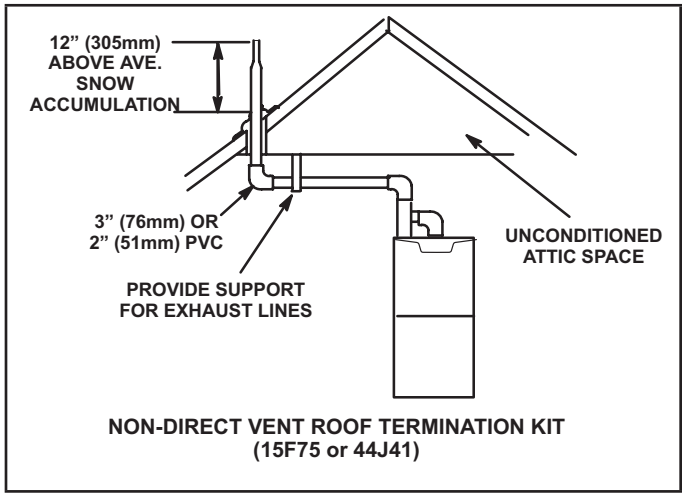

FIGURE 43

3 - If exhaust piping must be run up a side wall to position above snow accumulation or other obstructions, piping must be supported every 24 inches (610mm). When exhaust piping must be run up an outside wall, any reduction in exhaust pipe size must be done after the final elbow.

4 - Distance between exhaust pipe terminations on multiple furnaces must meet local codes.

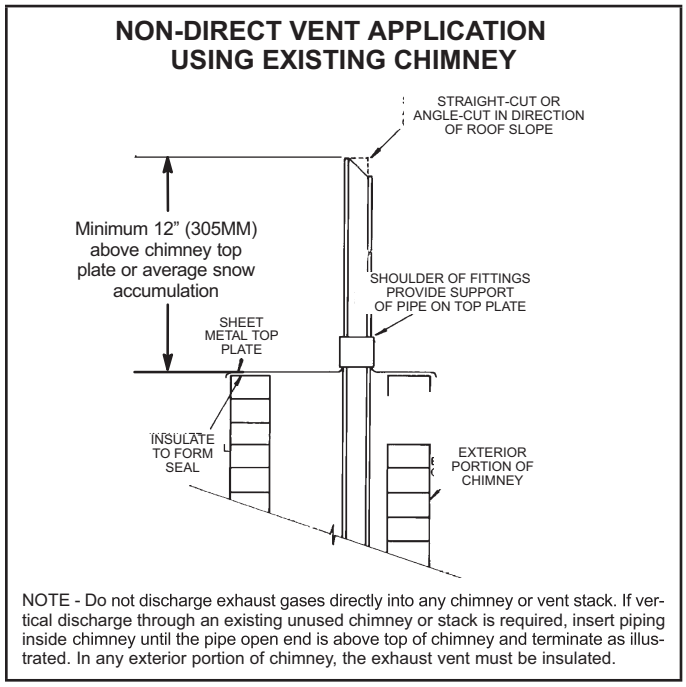

FIGURE 44

Crawl Space and Extended Horizontal Venting

Lennox provides kit 51W18 (USA) kit 15Z70 (Canada) to install 2” or 3” PVC exhaust piping through the floor joists and into the crawl space. See figure below.

This kit can also be used as a supplemental drain for installations with condensate run back in the vent pipe (ie. long horizontal runs, unconditioned spaces, etc.).

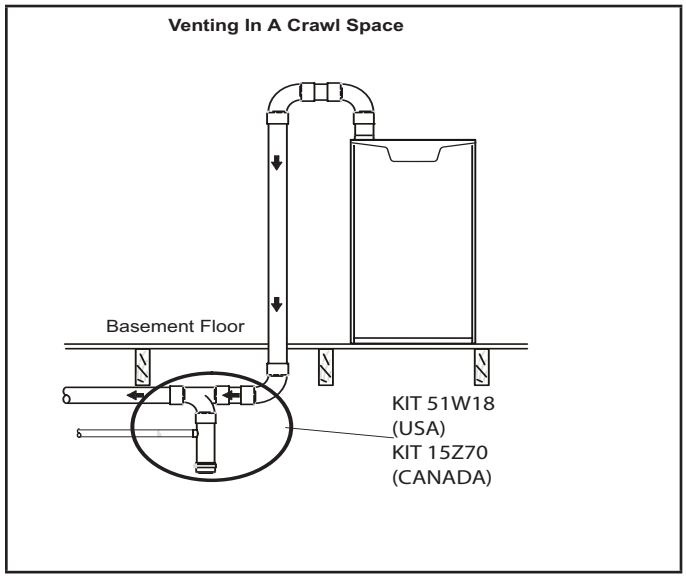

Condensate Piping

This unit is designed for either right- or left-side exit of condensate piping in upflow applications. In horizontal applications, the condensate trap must extend below the unit. An 8" service clearance is required for the condensate trap. Refer to figures "FIGURE 45" and "FIGURE 47" for condensate trap locations. "FIGURE 53" shows trap assembly using 1/2" PVC or 3/4" PVC.

NOTE - *If necessary the condensate trap may be installed up to 5' away from the furnace. Use PVC pipe to connect trap to furnace condensate outlet. Piping from furnace must slope down a minimum of 1/4" per ft. toward trap.*

1 - Determine which side condensate piping will exit the unit, location of trap, field-provided fittings and length of PVC pipe required to reach available drain.

NOTE - *Do not remove the rubber grommet used to seal the cabinet on the side not used when installing the condensate trap.*

2 - Use a large flat head screw driver or a 1/2" drive socket extension and remove plug ("FIGURE 45") from the cold end header box at the appropriate location on the side of the unit. Install provided 3/4 NPT street elbow fitting into cold end header box. Use Teflon tape or appropriate pipe dope.

NOTE - *Cold end header box drain plugs are factory installed. Check the unused plug for tightness to prevent leakage.*

3 - Install the cap over the clean out opening at the base of the trap. Secure with clamp. See "FIGURE 53".

4 - Install drain trap using appropriate PVC fittings, glue all joints. Glue the provided drain trap as shown in "FIGURE 53". Route the condensate line to an open drain. Condensate line must maintain a 1/4" downward slope from the furnace to the drain.

CONDENSATE TRAP AND PLUG LOCATIONS
(Unit shown in upflow position)

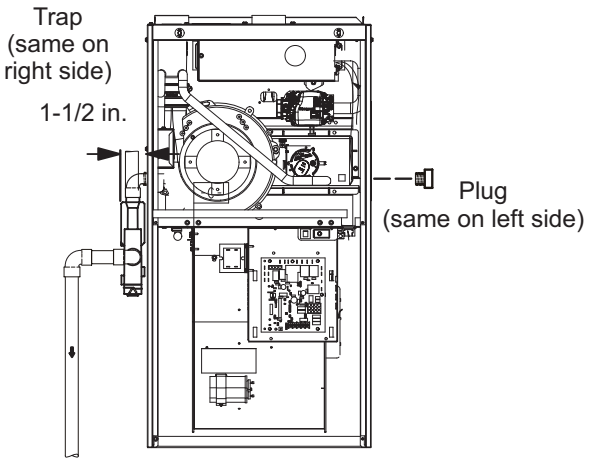

NOTE - In upflow applications where side return air filter is installed on same side as the condensate trap, filter rack must be installed beyond condensate trap or trap must be re-located to avoid interference.

FIGURE 45

5 - "FIGURE 48" and "FIGURE 50" show the furnace and evaporator coil using a separate drain. If necessary the condensate line from the furnace and evaporator coil can drain together. See "FIGURE 49", "FIGURE 51" and "FIGURE 52".

Upflow furnace ("FIGURE 51") *- In upflow furnace applications the field provided vent must be a minimum 1" to a maximum 2" length above the condensate drain outlet connection. Any length above 2" may result in a flooded heat exchanger if the combined primary drain line were to become restricted.*

Horizontal furnace ("FIGURE 52") *- In horizontal furnace applications the field provided vent must be a minimum 4" to a maximum 5" length above the condensate drain outlet connection. Any length above 5" may result in a flooded heat exchanger if the combined primary drain line were to become restricted.*

NOTE - *In horizontal applications it is recommended to install a secondary drain pan underneath the unit and trap assembly.*

NOTE - *Appropriately sized tubing and barbed fitting may be used for condensate drain. Attach to the drain on the trap using a hose clamp. See "FIGURE 46".*

⚠ CAUTION

Do not use copper tubing or existing copper condensate lines for drain line.

6 - If unit will be started immediately upon completion of installation, prime trap per procedure outlined in Unit Start-Up section.

Field Provided Drain Components

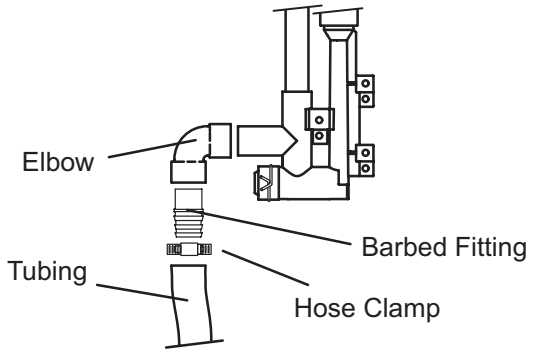

FIGURE 46

Condensate line must slope downward away from the trap to drain. If drain level is above condensate trap, condensate pump must be used. Condensate drain line should be routed within the conditioned space to avoid freezing of condensate and blockage of drain line. If this is not possible, a heat cable kit may be used on the condensate trap and line. Heating cable kit is available from Lennox in various lengths; 6 ft. (1.8m) - kit no. 26K68 and 24 ft. (7.3m) - kit no. 26K69.

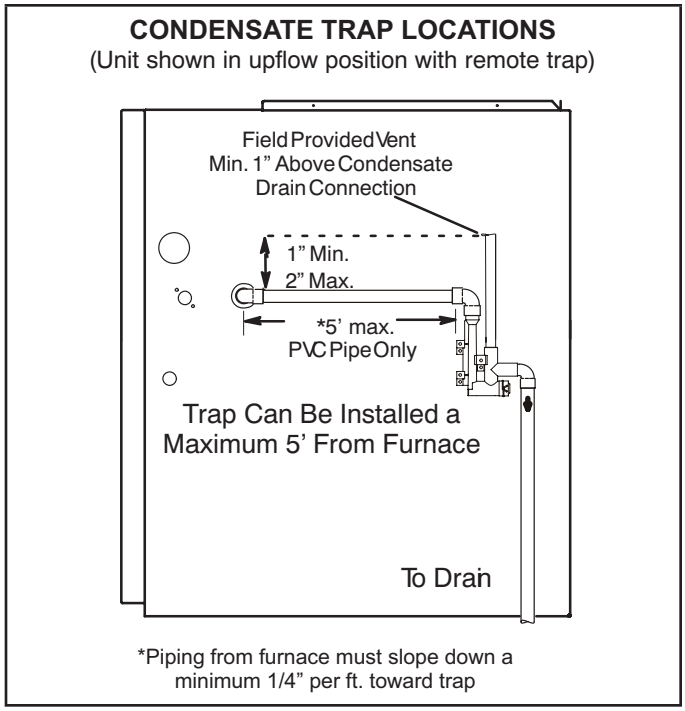

FIGURE 47

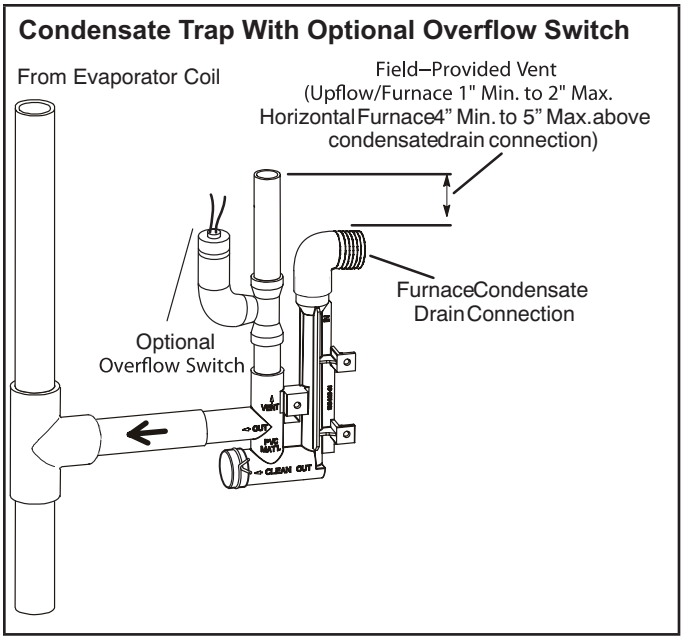

FIGURE 49

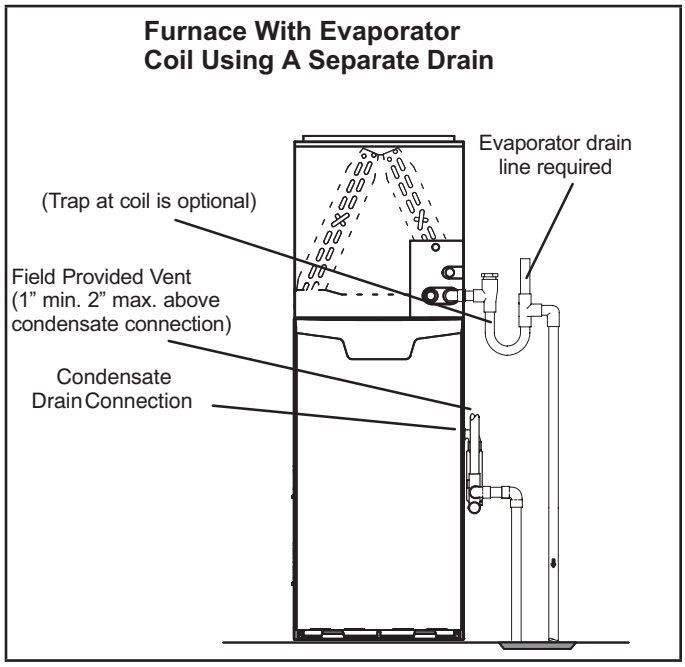

FIGURE 48

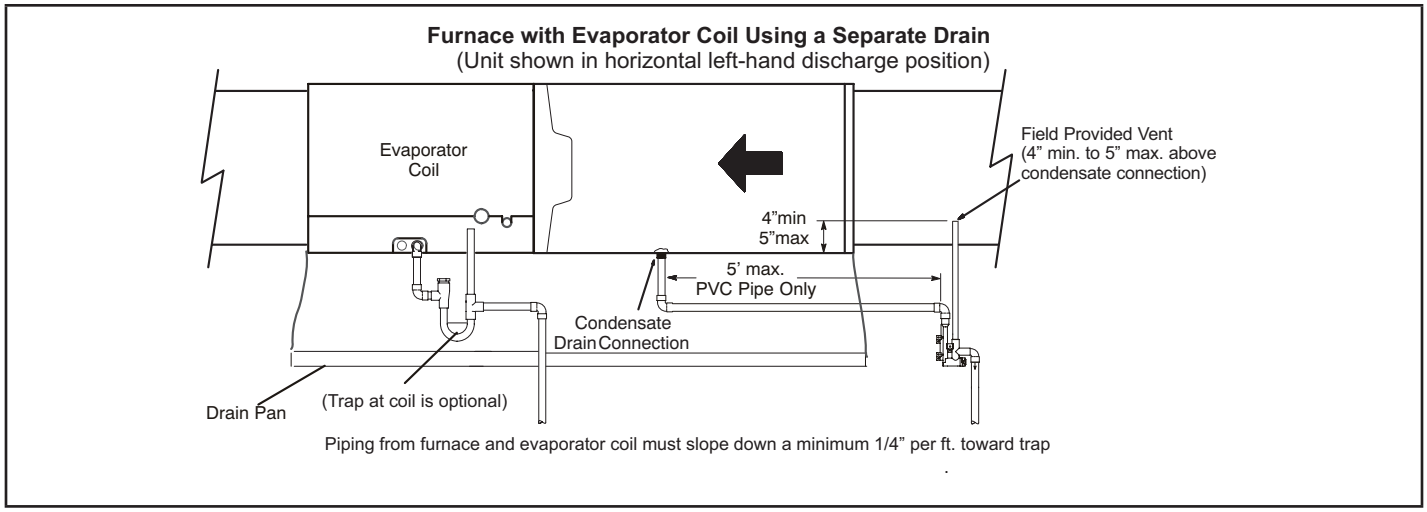

FIGURE 50

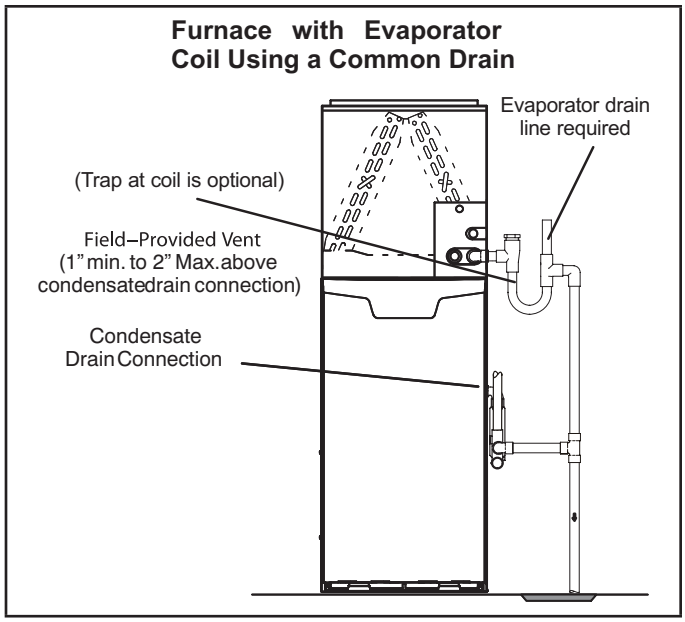

FIGURE 51

⚠ IMPORTANT

When combining the furnace and evaporator coil drains together, the A/C condensate drain outlet must be vented to relieve pressure in order for the furnace pressure switch to operate properly.

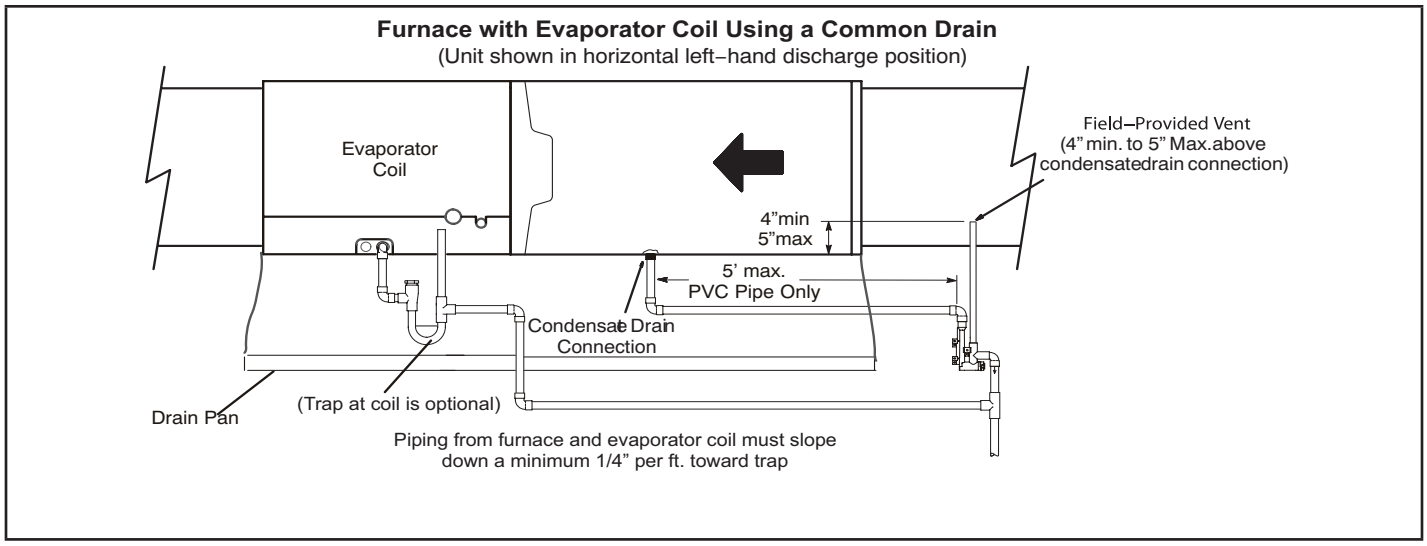

FIGURE 52

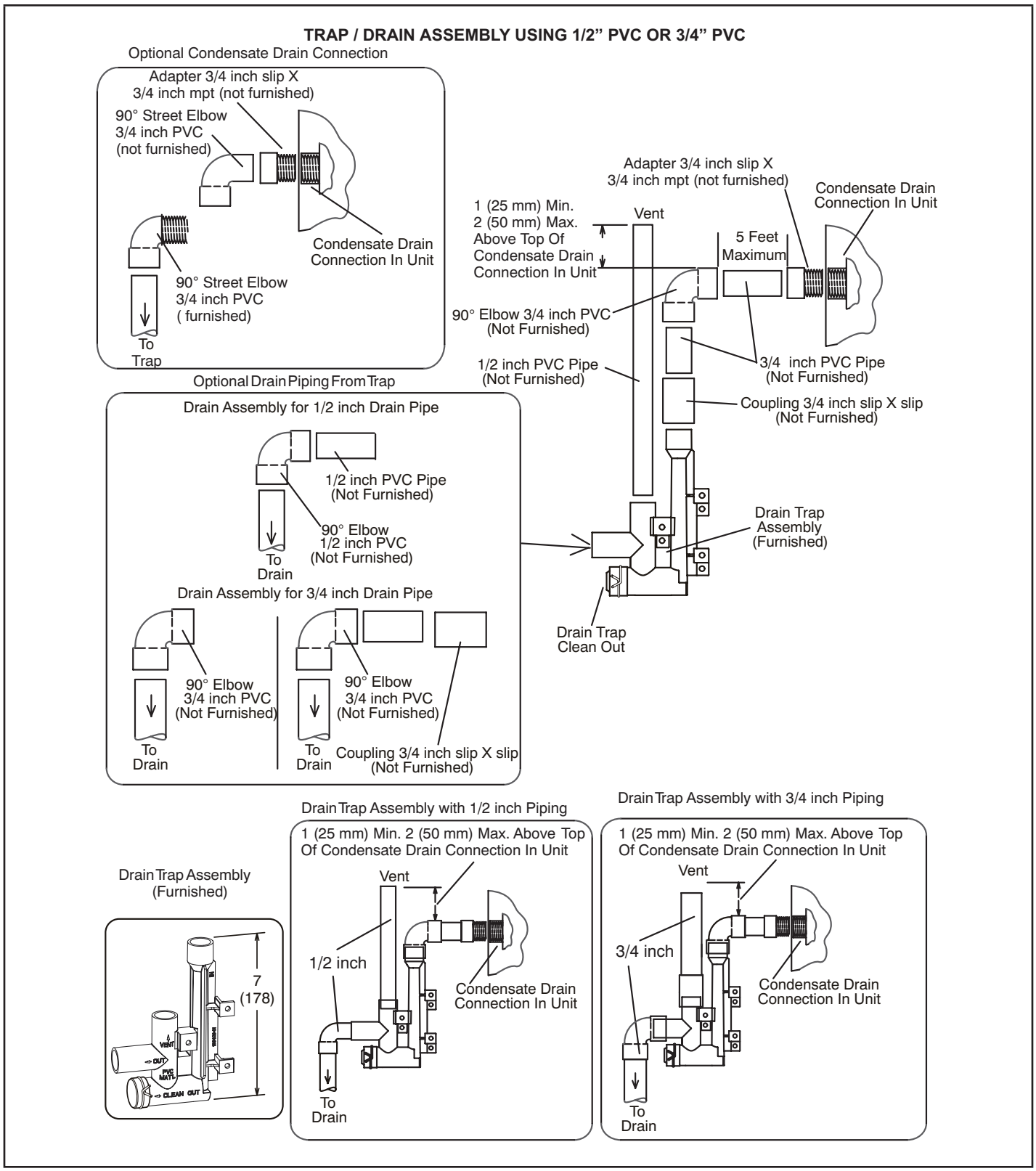
TRAP / DRAIN ASSEMBLY USING 1/2" PVC OR 3/4" PVC
Optional Condensate Drain Connection
Adapter 3/4 inch slip X
3/4 inch mpt (not furnished)
90° Street Elbow
3/4 inch PVC
(not furnished)
Condensate Drain
Connection In Unit
90° Street Elbow
3/4 inch PVC
(furnished)
To
Trap
Adapter 3/4 inch slip X
3/4 inch mpt (not furnished)
Condensate Drain
Connection In Unit
1 (25 mm) Min.
2 (50 mm) Max.
Above Top Of
Condensate Drain
Connection In Unit
Vent
5 Feet
Maximum
90° Elbow 3/4 inch PVC
(Not Furnished)
1/2 inch PVC Pipe
(Not Furnished)
3/4 inch PVC Pipe
(Not Furnished)
Coupling 3/4 inch slip X slip
(Not Furnished)
Optional Drain Piping From Trap
Drain Assembly for 1/2 inch Drain Pipe
1/2 inch PVC Pipe
(Not Furnished)
90° Elbow
1/2 inch PVC
(Not Furnished)
To
Drain
Drain Trap
Assembly
(Furnished)
Drain Assembly for 3/4 inch Drain Pipe
90° Elbow
3/4 inch PVC
(Not Furnished)
To
Drain
90° Elbow
3/4 inch PVC
(Not Furnished)
To
Drain
Coupling 3/4 inch slip X slip
(Not Furnished)
Drain Trap
Clean Out
Drain Trap Assembly
(Furnished)
7
(178)
VENT
OUT
PVC MATL
CLEAN OUT
Drain Trap Assembly with 1/2 inch Piping
1 (25 mm) Min. 2 (50 mm) Max. Above Top
Of Condensate Drain Connection In Unit
Vent
1/2 inch
Condensate Drain
Connection In Unit
To
Drain
Drain Trap Assembly with 3/4 inch Piping
1 (25 mm) Min. 2 (50 mm) Max. Above Top
Of Condensate Drain Connection In Unit
Vent
3/4 inch
Condensate Drain
Connection In Unit
To
Drain

FIGURE 53

Gas Piping

⚠ CAUTION

If a flexible gas connector is required or allowed by the authority that has jurisdiction, black iron pipe shall be installed at the gas valve and extend outside the furnace cabinet. The flexible connector can then be added between the black iron pipe and the gas supply line.

⚠ WARNING

Do not over torque (800 in-lbs) or under torque (350 in-lbs) when attaching the gas piping to the gas valve.

1 - Gas piping may be routed into the unit through either the left- or right- hand side. Supply piping enters into the gas valve from the side of the valve as shown in “FIGURE 56”. Connect the gas supply piping into the gas valve. The maximum torque is 800 in lbs and minimum torque is 350 in lbs when attaching the gas piping to the gas valve.

⚠ IMPORTANT

When converting the ML193 unit from natural gas to LP/propane install the field provided low pressure switch. See “FIGURE 54”.

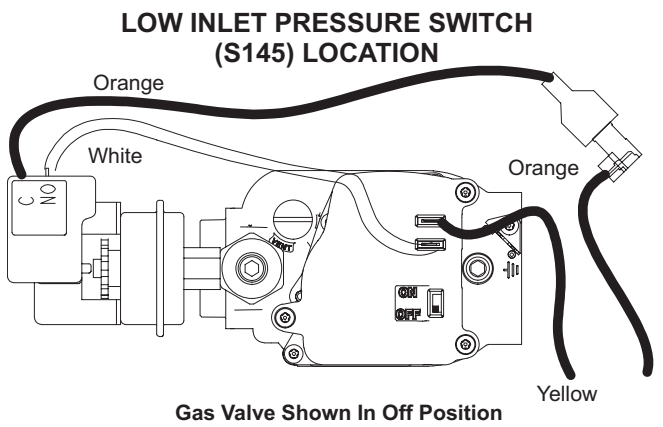

FIGURE 54

2 - When connecting gas supply, factors such as length of run, number of fittings and furnace rating must be considered to avoid excessive pressure drop. “TABLE 9” lists recommended pipe sizes for typical applications.

NOTE - *Use two wrenches when connecting gas piping to avoid transferring torque to the manifold.*

3 - Gas piping must not run in or through air ducts, clothes chutes, chimneys or gas vents, dumb waiters or elevator shafts. Center gas line through piping hole. Gas line should not touch side of unit. See “FIGURE 56” and “FIGURE 57”.

4 - Piping should be sloped 1/4 inch per 15 feet (6mm per 5.6m) upward toward the gas meter from the furnace. The piping must be supported at proper intervals, every 8 to 10 feet (2.44 to 3.05m), using suitable hangers or straps. Install a drip leg in vertical pipe runs to serve as a trap for sediment or condensate.

5 - A 1/8” N.P.T. plugged tap or pressure post is located on the gas valve to facilitate test gauge connection. See “FIGURE 61”.

6 - In some localities, codes may require installation of a manual main shut-off valve and union (furnished by installer) external to the unit. Union must be of the ground joint type.

⚠ IMPORTANT

Compounds used on threaded joints of gas piping must be resistant to the actions of liquified petroleum gases.

Leak Check

After gas piping is completed, carefully check all field-installed piping connections for gas leaks. Use a commercially available leak detecting solution specifically manufactured for leak detection. Never use an open flame to test for gas leaks.

The furnace must be isolated from the gas supply system by closing the individual manual shut-off valve during any gas supply system at pressures greater than or equal to ½ psig. (3.48 kPa, 14 inches w.c.). This furnace and its components are designed, manufactured and independently certified to comply with all applicable ANSI/CSA standards. A leak check of the furnace and its components is not required.

.

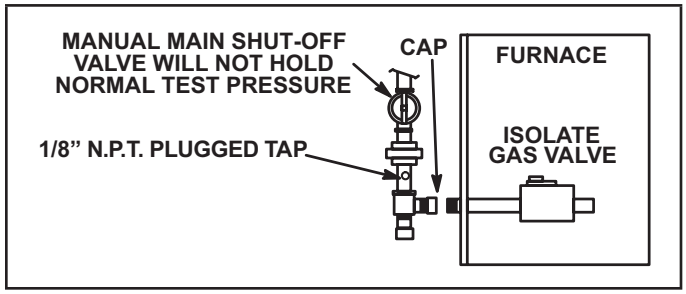

FIGURE 55

⚠ IMPORTANT

When testing pressure of gas lines, gas valve must be disconnected and isolated. See “FIGURE 55”. Gas valves can be damaged if subjected to pressures greater than 1/2 psig (3.48 kPa).

⚠ WARNING

FIRE OR EXPLOSION HAZARD

Failure to follow the safety warnings exactly could result in serious injury, death, or property damage. Never use an open flame to test for gas leaks. Check all connections using a commercially available soap solution made specifically for leak detection. Some soaps used for leak detection are corrosive to certain metals. Carefully rinse piping thoroughly after leak test has been completed.

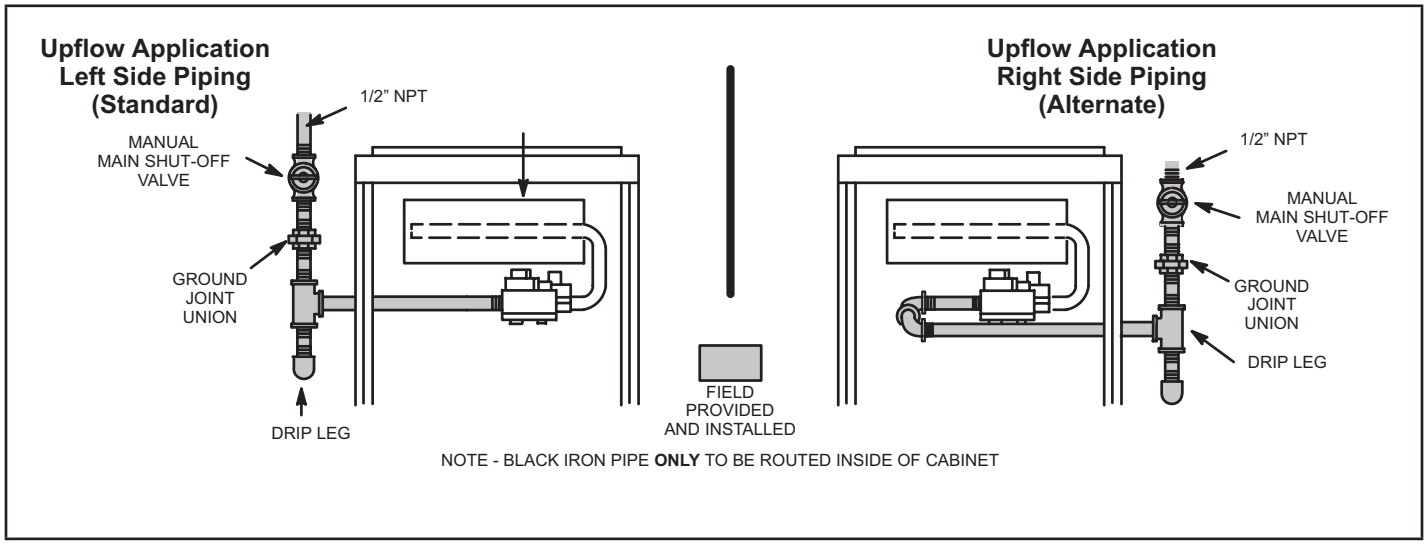

FIGURE 56

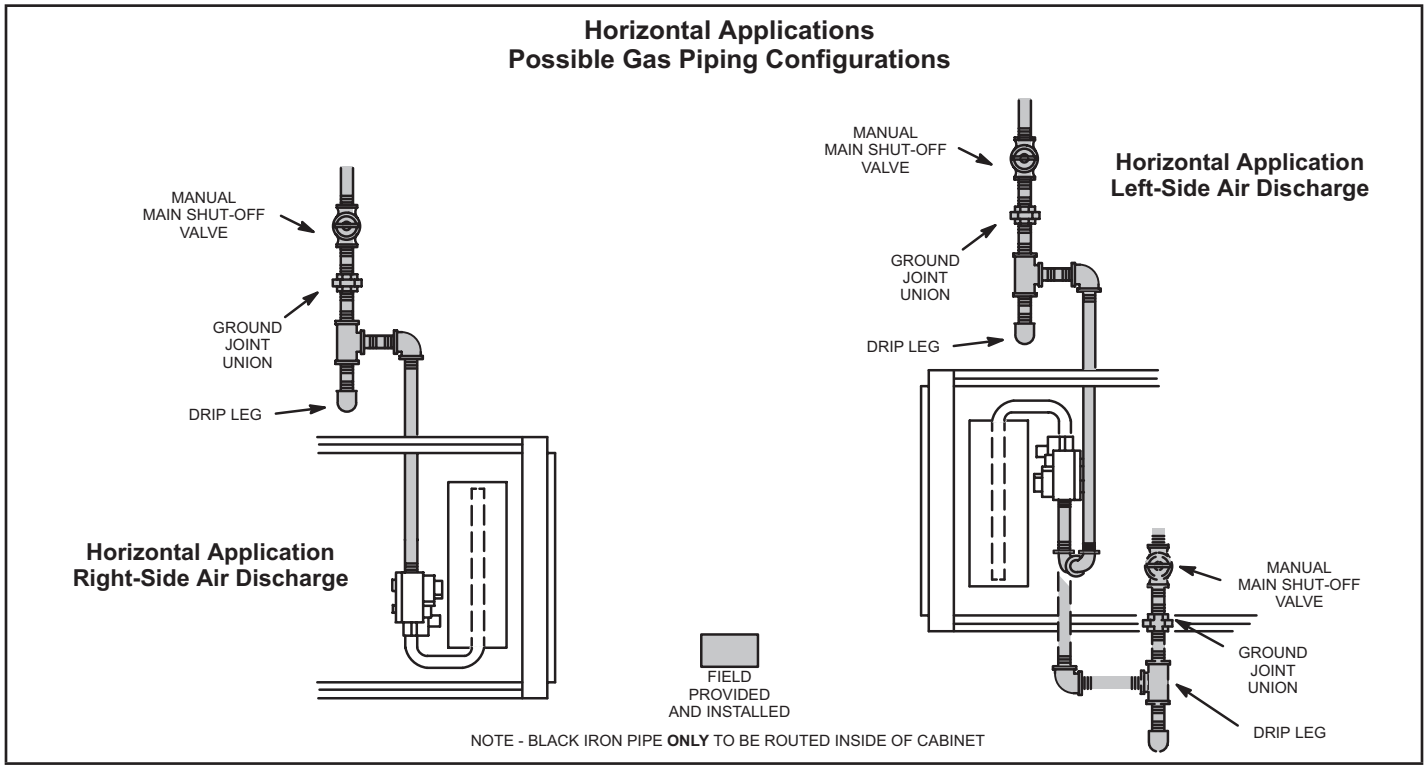

FIGURE 57

TABLE 9

Gas Pipe Capacity - ft3/hr (m3/hr)

Nominal Iron Pipe Size Inches (mm)	Internal Diameter inches (mm)	Length of Pipe - feet (m)									
		10 (3.048)	20 (6.096)	30 (9,144)	40 (12,192)	50 (15.240)	60 (18.288)	70 (21.336)	80 (24.384)	90 (27.432)	100 (30,480)
1/2 (12.7)	.622 (17.799)	172 (4.87)	118 (3.34)	95 (2.69)	81 (2.29)	72 (2.03)	65 (1.84)	60 (1.69)	56 (1.58)	52 (1.47)	50 (1.42)
3/4 (19.05)	.824 (20.930)	360 (10.19)	247 (7.000)	199 (5.63)	170 (4.81)	151 (4.23)	137 (3.87)	126 (3.56)	117 (3.31)	110 (3.11)	104 (2.94)
1 (25.4)	1.049 (26.645)	678 (19.19)	466 (13.19)	374 (10.59)	320 (9.06)	284 (8.04)	257 (7.27)	237 (6.71)	220 (6.23)	207 (5.86)	195 (5.52)
1-1/4 (31.75)	1.380 (35.052)	1350 (38.22)	957 (27.09)	768 (22.25)	657 (18.60)	583 (16.50)	528 (14.95)	486 (13.76)	452 (12.79)	424 (12.00)	400 (11.33)
1-1/2 (38.1)	1.610 (40.894)	2090 (59.18)	1430 (40.49)	1150 (32.56)	985 (27.89)	873 (24.72)	791 (22.39)	728 (20.61)	677 (19.17)	635 (17.98)	600 (17.00)
2 (50.8)	2.067 (52.502)	4020 (113.83)	2760 (78.15)	2220 (62.86)	1900 (53.80)	1680 (47.57)	1520 (43.04)	1400 (39.64)	1300 (36.81)	1220 (34.55)	1160 (32.844)
2-1/2 (63.5)	2.469 (67.713)	6400 (181.22)	4400 (124.59)	3530 (99.95)	3020 (85.51)	2680 (75.88)	2480 (70.22)	2230 (63.14)	2080 (58.89)	1950 (55.22)	1840 (52.10)
3 (76.2)	3.068 (77.927)	11300 (319.98)	7780 (220.30)	6250 (176.98)	5350 (151.49)	4740 (134.22)	4290 (121.47)	3950 (111.85)	3670 (103.92)	3450 (97.69)	3260 (92.31)

NOTE - *Capacity given in cubic feet (m3) of gas per hour and based on 0.60 specific gravity gas.*

Removal of the Furnace from Common Vent

In the event that an existing furnace is removed from a venting system commonly run with separate gas appliances, the venting system is likely to be too large to properly vent the remaining attached appliances. Conduct the following test while each appliance is operating and the other appliances (which are not operating) remain connected to the common venting system. If the venting system has been installed improperly, you must correct the system as indicated in the general venting requirements section.

⚠ WARNING

CARBON MONOXIDE POISONING HAZARD

Failure to follow the steps outlined below for each appliance connected to the venting system being placed into operation could result in carbon monoxide poisoning or death.

The following steps shall be followed for each appliance connected to the venting system being placed into operation, while all other appliances connected to the venting system are not in operation:

1 - Seal any unused openings in the common venting system.

2 - Inspect the venting system for proper size and horizontal pitch. Determine that there is no blockage, restriction, leakage, corrosion, or other deficiencies which could cause an unsafe condition.

3 - Close all building doors and windows and all doors between the space in which the appliances remaining connected to the common venting system are located and other spaces of the building. Turn on clothes dryers and any appliances not connected to the common venting system. Turn on any exhaust fans, such as range hoods and bathroom exhausts, so they will operate at maximum speed. Do not operate a summer exhaust fan. Close fireplace dampers.

4 - Follow the lighting instructions. Turn on the appliance that is being inspected. Adjust the thermostat so that the appliance operates continuously.

5 - After the main burner has operated for 5 minutes, test for leaks of flue gases at the draft hood relief opening. Use the flame of a match or candle.

6 - After determining that each appliance connected to the common venting system is venting properly, (step 3) return all doors, widows, exhaust fans, fireplace dampers, and any other gas-burning appliances to their previous mode of operation.

7 - If a venting problem is found during any of the preceding tests, the common venting system must be modified to correct the problem.

Resize the common venting system to the minimum vent pipe size determined by using the appropriate tables in Appendix G. (These are in the current standards of the National Fuel Gas Code ANSI Z223.1.

Electrical

⚠ IMPORTANT

When matching this gas furnace with zoning, defrost tempering stat or other 24V accessories, It is recommended to replace the factory installed transformer with kit 27J32.

Kit 27J32 contains a 75VA transformer, so you do not overload the original 40VA transformer.

ELECTROSTATIC DISCHARGE (ESD)
Precautions and Procedures

⚠ CAUTION

Electrostatic discharge can affect electronic components. Take precautions to neutralize electrostatic charge by touching your hand and tools to metal prior to handling the control.

⚠ WARNING

Electric Shock Hazard. Can cause injury or death. Unit must be properly grounded in accordance with national and local codes.

⚠ WARNING

Fire Hazard. Use of aluminum wire with this product may result in a fire, causing property damage, severe injury or death. Use copper wire only with this product.

INTERIOR MAKE-UP BOX INSTALLATION

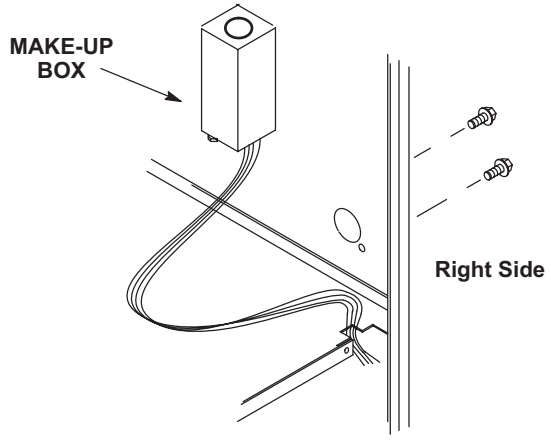

FIGURE 58

The unit is equipped with a field make-up box. The make-up box may be moved to the right side of the furnace to facilitate installation. Secure the excess wire to the existing harness to protect it from damage.

Refer to “FIGURE 59” for schematic wiring diagram and troubleshooting.

The power supply wiring must meet Class I restrictions. Protected by either a fuse or circuit breaker, select circuit protection and wire size according to unit nameplate.

⚠ CAUTION

Failure to use properly sized wiring and circuit breaker may result in property damage. Size wiring and circuit breaker(s) per Product Specifications bulletin (EHB) and unit rating plate.

NOTE - *Unit nameplate states maximum current draw. Maximum Over-Current Protection allowed is 15 AMP.*

Holes are on both sides of the furnace cabinet to facilitate wiring .

Install a separate (properly sized) disconnect switch near the furnace so that power can be turned off for servicing. Before connecting the thermostat check to make sure the wires will be long enough for servicing at a later date. Make sure that thermostat wire is long enough to facilitate future removal of blower for service.

Complete the wiring connections to the equipment. Use the provided unit wiring diagram and the field wiring shown in “FIGURE 59”. Use 18-gauge wire or larger that is suitable for Class II rating for thermostat connections.

Electrically ground the unit according to local codes or, in the absence of local codes, according to the current National Electric Code (ANSI/NFPA No. 70) for the USA and current Canadian Electric Code part 1 (CSA standard C22.1) for Canada. A green ground wire is provided in the field make-up box.

NOTE - *The ML193UHE furnace contains electronic components that are polarity sensitive. Make sure that the furnace is wired correctly and is properly grounded.*

Accessory Terminals See pages 39 and 40 for igntion control illustration.

One line voltage “EAC” 1/4” spade terminal is provided on the furnace integrated control. This terminal is energized when the indoor blower is operating. Any accessory rated up to one amp can be connected to this terminal with the neutral leg of the circuit being connected to one of the provided neutral terminals. If an accessory rated at greater than one amp is connected to this terminal, it is necessary to use an external relay.

One line voltage 120V “HUM” 1/4” spade terminal is provided on the furnace integrated control. This terminal is energized in the heating mode when the combustion air inducer is operating. Any humidifier rated up to one amp can be connected to this terminal with the neutral leg of the circuit being connected to one of the provided neutral terminals. If a humidifier rated at greater than one amp is connected to this terminal, it is necessary to use an external relay relay

One 24V ”HUM” 1/4” spade terminal is provided on the furnace integrated control. The terminal is energized in the heating mode when the combustion air inducer is operating and the pressure switch is closed. Any humidifier rated up to 0.5 amp can be connected to this terminal with the ground leg of the circuit connected to ground or the ”C” terminal.

Thermostat

Install the room thermostat according to the instructions provided with the thermostat. See “FIGURE 59” for thermostat designations. If the furnace is being matched with a heat pump, refer to the thermostat installation instruction for set up.

Indoor Blower Speeds

1 - When the thermostat is set to “FAN ON,” the indoor blower will run continuously on the (FAN) speed when there is no cooling or heating demand. See table below for for allowable circulation speeds.

2 - When the ML193UHE is running in the heating mode, the indoor blower will run on the heating speed (HEAT). See table below for allowable heating speeds.

3 - When there is a cooling demand, the indoor blower will run on the cooling speed (COOL).

Generator Use - Voltage Requirements

The following requirements must be kept in mind when specifying a generator for use with this equipment:

- The furnace requires 120 volts + 10% (Range: 108 volts to 132 volts)
- The furnace operates at 60 Hz + 5% (Range: 57 Hz to 63 Hz)
- The furnace integrated control requires both polarity and proper ground. Both polarity and proper grounding should be checked before attempting to operate the furnace on either permanent or temporary power
- Generator should have a wave form distortion of less than 5% THD (total harmonic distortion).

<table>
<tr><th colspan="6">Allowable Heating Speeds</th></tr>
<tr><th>ML193UHE Model Number</th><th>Red</th><th>Yellow</th><th>Blue</th><th>Brown</th><th>Black</th></tr>
<tr><td>-030</td><td rowspan="2">Allowed</td><td rowspan="2">Factory Setting</td><td rowspan="2">Allowed</td><td rowspan="3">Allowed</td><td rowspan="5">Not Allowed</td></tr>
<tr><td>-045</td></tr>
<tr><td>-070</td><td rowspan="5">Not Allowed</td><td>Allowed</td><td>Factory Setting</td></tr>
<tr><td>-09036C</td><td>Not Allowed</td><td>Allowed</td><td>Factory Setting</td></tr>
<tr><td>-09048C</td><td>Allowed</td><td>Factory Setting</td><td>Allowed</td></tr>
<tr><td>-11048C</td><td>Not Allowed</td><td>Allowed</td><td>Factory Setting</td><td>Allowed</td></tr>
<tr><td>-11060C</td><td>Allowed</td><td>Factory Setting</td><td>Allowed</td><td>Not Allowed</td></tr>
</table>

<table>
<tr><th colspan="6">Allowable Circulation Speeds</th></tr>
<tr><th>Model Number</th><th>Red</th><th>Yellow</th><th>Blue</th><th>Brown</th><th>Black</th></tr>
<tr><td>All Models</td><td>Factory Setting</td><td>Not Allowed</td><td>Not Allowed</td><td>Not Allowed</td><td>Not Allowed</td></tr>
</table>

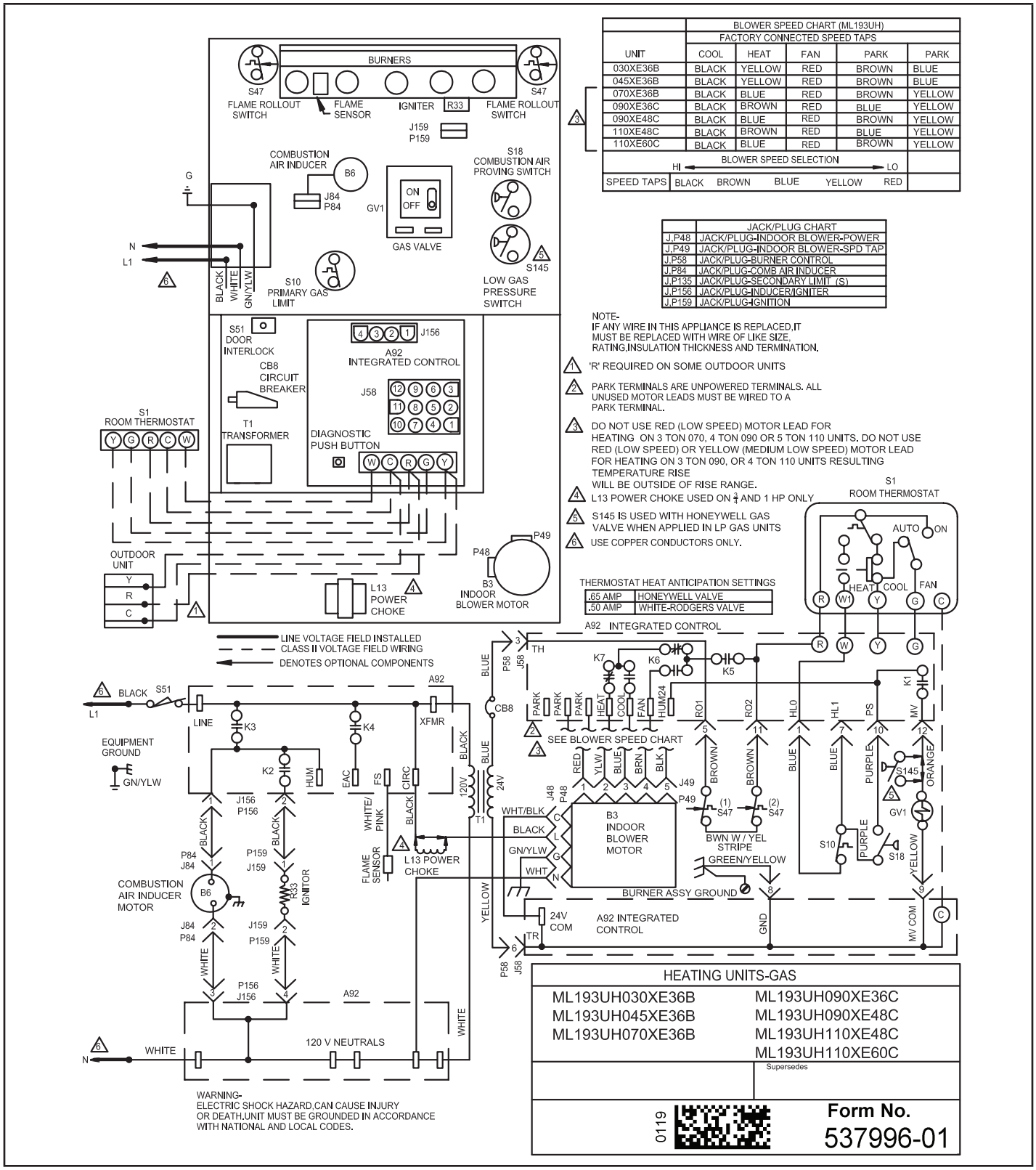

UNIT	BLOWER SPEED CHART (ML193UH) FACTORY CONNECTED SPEED TAPS COOL	HEAT	FAN	PARK	PARK
030XE36B	BLACK	YELLOW	RED	BROWN	BLUE
045XE36B	BLACK	YELLOW	RED	BROWN	BLUE
070XE36B	BLACK	BLUE	RED	BROWN	YELLOW
090XE36C	BLACK	BROWN	RED	BLUE	YELLOW
090XE48C	BLACK	BLUE	RED	BROWN	YELLOW
110XE48C	BLACK	BROWN	RED	BLUE	YELLOW
110XE60C	BLACK	BLUE	RED	BROWN	YELLOW
BLOWER SPEED SELECTION HI ← → LO					
SPEED TAPS	BLACK	BROWN	BLUE	YELLOW	RED

	JACK/PLUG CHART
J,P48	JACK/PLUG-INDOOR BLOWER-POWER
J,P49	JACK/PLUG-INDOOR BLOWER-SPD TAP
J,P58	JACK/PLUG-BURNER CONTROL
J,P84	JACK/PLUG-COMB AIR INDUCER
J,P135	JACK/PLUG-SECONDARY LIMIT (S)
J,P156	JACK/PLUG-INDUCER/IGNITER
J,P159	JACK/PLUG-IGNITION

NOTE-
IF ANY WIRE IN THIS APPLIANCE IS REPLACED,IT MUST BE REPLACED WITH WIRE OF LIKE SIZE, RATING,INSULATION THICKNESS AND TERMINATION.

1. 'R' REQUIRED ON SOME OUTDOOR UNITS
2. PARK TERMINALS ARE UNPOWERED TERMINALS. ALL UNUSED MOTOR LEADS MUST BE WIRED TO A PARK TERMINAL.
3. DO NOT USE RED (LOW SPEED) MOTOR LEAD FOR HEATING ON 3 TON 070, 4 TON 090 OR 5 TON 110 UNITS. DO NOT USE RED (LOW SPEED) OR YELLOW (MEDIUM LOW SPEED) MOTOR LEAD FOR HEATING ON 3 TON 090, OR 4 TON 110 UNITS RESULTING TEMPERATURE RISE WILL BE OUTSIDE OF RISE RANGE.
4. L13 POWER CHOKE USED ON $\frac{3}{4}$ AND 1 HP ONLY
5. S145 IS USED WITH HONEYWELL GAS VALVE WHEN APPLIED IN LP GAS UNITS
6. USE COPPER CONDUCTORS ONLY.

FIGURE 59

Integrated Control 103217-03

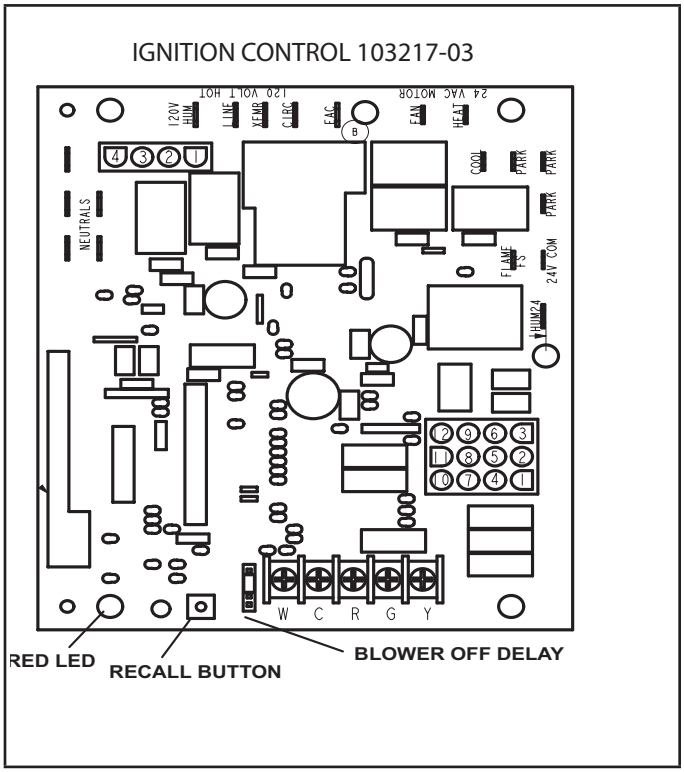

FIGURE 60

TABLE 10

1/4” QUICK CONNECT TERMINALS	
120V HUM	POWER FOR HUMIDIFIER (120 VAC
LINE	INCOMING POWER LINE (120 VAC)
XFMR	TRANSFORMER PRIMARY (120 VAC)
CIRC	INDOOR BLOWER MOTOR (120 VAC)
EAC	ELECTRONIC AIR CLEANER (120 VAC)
HUM24	POWER FOR HUMIDIFIER (24 VAC)
NEUTRALS (5)	NEUTRAL
3/16” QUICK CONNECT TERMINALS	
COOL	COOL SPEED FROM INDOOR BLOWER MOTOR (24 VAC)
HEAT	HEAT SPEED FROM INDOOR BLOWER MOTOR (24 VAC)
FAN	CONTINUOUS FAN SPEED FROM INDOOR BLOWER MOTOR (24 VAC)
PARK (3)	TERMINALS FOR UNUSED MOTOR SPEED TAPS
FS	FLAME SENSOR ELECTRODE (120 VAC)
24 COM	COMMON (24 VAC)

RED LED Flash Code [2]	Diagnostic Codes / Status
Off	No power to control or board fault detected
Heartbeat[1]	Normal Operation - Idle, Continuous Fan, Cool
Continuous Rapid Flash	Call For Heat / Burner Operation
1	Reverse Line Voltage Polarity
2	Improper Earth Ground
3	Burner failed to light, or lost flame during heat demand
4	Low Flame Signal - check flame sensor
5	Watchguard - burner failed to light, exceeded maximum number of retries or recycles.
6	Not Used
7	Primary or Secondary Limit Open or Watchguard Mode - Limit Switch Open longer than 3 minutes
8	Rollout Switch Open
9	Pressure Switch failed to close or opened during heat demand
10	Watchguard - Pressure Switch opened 5 times during one heat demand
11	Pressure Switch stuck closed prior to activation of combustion air inducer
12	Flame Sensed without gas valve energized
13	Low Line Voltage
Notes	
Note - 1	A ”Heartbeat” is indicated by a ”Slow Flash” - 1 sec on 1 sec off, repeating
Note - 2	Error codes are indicated by a “rapid flash” - the LED flashes X times at ½ second on ½ second off, remains off for 3 seconds then repeats.
Note - 3	Last 10 error codes are stored in memory including when power is shut off to the unit. - To recall, press and release button, most recent will be displayed first, LED off for 3 sec, then next error code is displayed, etc. To clear error codes, depress and hold button longer than 5 seconds.

Integrated Control 107163-01

IGNITION CONTROL 107163-01

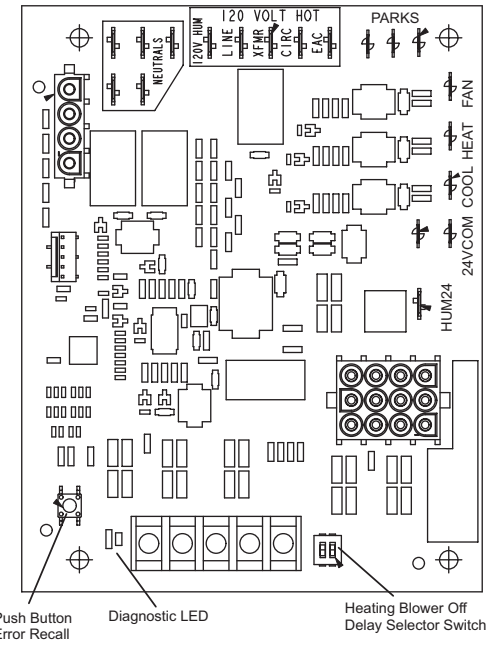

RED LED Flash Code	Diagnostic Codes / Status of Furnace Ignition Control 107163-01
Off	No Power to Control or Board Fault Detected
On	Board Fault Detected
Fast Heartbeat[3]	Call for Heat / Burner Operation
Slow Heartbeat[1]	Normal Operation – Idle, Continuous Fan, or Cool
1 Flash[2]	Reverse Line Voltage Polarity or Phasing of 120V power
2 Flashes[2]	Improper earth ground
3 Flashes[2]	Burner failed to light, or lost flame during heat demand
4 Flashes[2]	Low flame signal – check flame sensor
5 Flashes[2]	Watchguard – burner failed to light, exceeded maximum number of retries/recycles, 1 hour lockout
6 Flashes[2]	Not used
7 Flashes[2]	Primary or Secondary limit switch open or Watchguard mode – Limit Switch open longer than 3 minutes
8 Flashes[2]	Roll-out Switch Open
9 Flashes[2]	Pressure Switch failed to close or opened during heat demand, inducer on
10 Flashes[2]	Watchguard - Pressure switch opened 5 times during a single heating demand
11 Flashes[2]	Pressure switch stuck closed prior to activation of Combustion Air Inducer
12 Flashes[2]	Flame sensed without gas valve energized
13 Flashes[2]	Low line voltage
Notes	
Note - 1	A slow heartbeat is indicated by 1s on / 1s off. It is used for idle, continuous fan and cool modes.
Note - 2	Error codes are indicated by a “rapid flash” - the LED flashes X times at ½ second on ½ second off, remains off for 3 seconds then repeats.
Note - 3	A fast heartbeat is indicated by 0.5s on / 0.5s off. It is only used during a heat call.
Note - 4	Last 10 error codes are stored in memory including when power is shut off to the unit. - To recall, press, and release button, most recent will be displayed first, LED off for 3 sec, then next error code is displayed, etc. To clear error codes, depress and hold button longer than 5 seconds.

Unit Start-Up

FOR YOUR SAFETY READ BEFORE OPERATING

⚠ WARNING

Do not use this furnace if any part has been underwater. A flood-damaged furnace is extremely dangerous. Attempts to use the furnace can result in fire or explosion. Immediately call a qualified service technician to inspect the furnace and to replace all gas controls, control system parts, and electrical parts that have been wet or to replace the furnace, if deemed necessary.

⚠ WARNING

Danger of explosion. Can cause injury or product or property damage. Should the gas supply fail to shut off or if overheating occurs, shut off the gas valve to the furnace before shutting off the electrical supply.

⚠ CAUTION

Before attempting to perform any service or maintenance, turn the electrical power to unit OFF at disconnect switch.

BEFORE LIGHTING the unit, smell all around the furnace area for gas. Be sure to smell next to the floor because some gas is heavier than air and will settle on the floor.

The gas valve on the ML193UHE is equipped with a gas control switch (lever). Use only your hand to move switch. Never use tools. If the switch will not move by hand, do not try to repair it. Force or attempted repair may result in a fire or explosion.

Placing the furnace into operation:

ML193UHE units are equipped with an automatic hot surface ignition system. Do not attempt to manually light burners on this furnace. Each time the thermostat calls for heat, the burners will automatically light. The ignitor does not get hot when there is no call for heat on these units.

Priming Condensate Trap

The condensate trap should be primed with water prior to start-up to ensure proper condensate drainage. Either pour 10 fl. oz. (300 ml) of water into the trap, or follow these steps to prime the trap:

1 - Follow the lighting instructions to place the unit into operation.

2 - Set the thermostat to initiate a heating demand.

3 - Allow the burners to fire for approximately 3 minutes.

4 - Adjust the thermostat to deactivate the heating demand.

5 - Wait for the combustion air inducer to stop. Set the thermostat to initiate a heating demand and again allow the burners to fire for approximately 3 minutes.

6 - Adjust the thermostat to deactivate the heating demand and wait for the combustion air inducer to stop. At this point, the trap should be primed with sufficient water to ensure proper condensate drain operation.

⚠ WARNING

. If you do not follow these instructions exactly, a fire or explosion may result causing property damage, personal injury or death.

Gas Valve Operation ("FIGURE 61")

1 - **STOP!** Read the safety information at the beginning of this section.

2 - Set the thermostat to the lowest setting.

3 - Turn off all electrical power to the unit.

4 - This furnace is equipped with an ignition device which automatically lights the burners. Do not try to light the burners by hand.

5 - Remove the upper access panel.

6 - Move gas valve switch to OFF. See "FIGURE 61".

7 - Wait five minutes to clear out any gas. If you then smell gas, STOP! Immediately call your gas supplier from a neighbor's phone. Follow the gas supplier's instructions. If you do not smell gas go to next step.

8 - Move gas valve switch to ON. See "FIGURE 61"

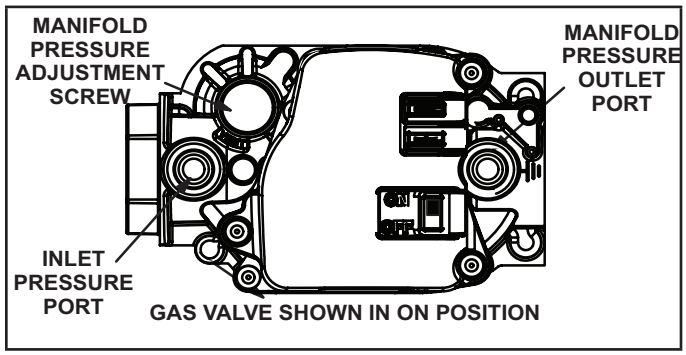

FIGURE 61

9 - Replace the upper access panel.

10- Turn on all electrical power to the unit.

11- Set the thermostat to desired setting.

NOTE - *When unit is initially started, steps 1 through 11 may need to be repeated to purge air from gas line.*

12- If the appliance will not operate, follow the instructions "Turning Off Gas to Unit"

Turning Off Gas to Unit

1 - Set the thermostat to the lowest setting.

2 - Turn off all electrical power to the unit if service is to be performed.

3 - Remove the upper access panel.

4 - Move gas valve switch to OFF.

5 - Replace the upper access panel.

Failure To Operate

If the unit fails to operate, check the following:

1 - Is the thermostat calling for heat?

2 - Are access panels securely in place?

3 - Is the main disconnect switch closed?

4 - Is there a blown fuse or tripped breaker?

5 - Is the filter dirty or plugged? Dirty or plugged filters will cause the limit control to shut the unit off.

6 - Is gas turned on at the meter?

7 - Is the manual main shut-off valve open?

8 - Is the internal manual shut-off valve open?

9 - Is the unit ignition system in lockout? If the unit locks out again, inspect the unit for blockages.

Heating Sequence Of Operation

1 - When thermostat calls for heat, combustion air inducer starts.

2 - Combustion air pressure switch proves blower operation. Switch is factory set and requires no adjustment.

3 - After a 15-second prepurge, the hot surface ignitor energizes.

4 - After a 20-second ignitor warm-up period, the gas valve solenoid opens. A 4-second Trial for Ignition period begins."

5 - Gas is ignited, flame sensor proves the flame, and the combustion process continues.

6 - If flame is not detected after first ignition trial, the ignition control will repeat steps 3 and 4 four more times before locking out the gas valve ("WATCHGUARD" flame failure mode). The ignition control will then automatically repeat steps 1 through 6 after 60 minutes. To interrupt the 60-minute "WATCHGUARD" period, move thermostat from "Heat" to "OFF" then back to "Heat". Heating sequence then restarts at step 1.

Gas Pressure Adjustment

Gas Flow (Approximate)

TABLE 11

GAS METER CLOCKING CHART				
ML193 Unit	Seconds for One Revolution			
	Natural		LP	
	1 cu ft Dial	2 cu ft Dial	1 cu ft Dial	2 cu ft Dial
-030	120	240	300	600
-045	80	160	200	400
-070	55	110	136	272
-090	41	82	102	204
-110	33	66	82	164
Natural-1000 btu/cu ft LP-2500 btu/cu ft				

Furnace should operate at least 5 minutes before checking gas flow. Determine time in seconds for two revolutions of gas through the meter. (Two revolutions assures a more accurate time.) Divide by two and compare to time in "TABLE 11". If manifold pressure matches "TABLE 12" and rate is incorrect, check gas orifices for proper size and restriction. Remove temporary gas meter if installed.

NOTE - *To obtain accurate reading, shut off all other gas appliances connected to meter.*

Supply Pressure Measurement

When testing supply gas pressure, use the 1/8" N.P.T. plugged tap or pressure post located on the gas valve to facilitate test gauge connection. See "FIGURE 61". Check gas line pressure with unit firing at maximum rate. Low pressure may result in erratic operation or underfire. High pressure can result in permanent damage to gas valve or overfire.

On multiple unit installations, each unit should be checked separately, with and without units operating. Supply pressure must fall within range listed in "TABLE 12".

Manifold Pressure Measurement

1 - Connect the test gauge positive side "+" to manifold pressure tap on gas valve.

2 - Tee into the gas valve regulator vent hose and connect to test gauge negative "-".

3 - Start unit and let run for 5 minutes to allow for steady state conditions.

4 - After allowing unit to stabilize for 5 minutes, record manifold pressure and compare to value given in "TABLE 12".

5 - Shut unit off and remove manometer as soon as an accurate reading has been obtained. Take care to replace pressure tap plug.

6 - Start unit and perform leak check. Seal leaks if found.

TABLE 12

Supply Line and Manifold Pressure (inches w.c.)

Unit	Fuel	Manifold Pressure	Line Pressure
All	Nat. Gas	3.5	4.5 - 10.5
All	L.P. Gas	10.0	11.0 - 13.0

NOTE - *A natural to L.P. propane gas changeover kit is necessary to convert this unit. Refer to the changeover kit installation instruction for the conversion procedure.*

Proper Combustion

Furnace should operate minimum 15 minutes with correct manifold pressure and gas flow rate before checking combustion. Take combustion sample beyond the flue outlet and compare to the table below.

TABLE 13

ML193 Unit	CO_2 Nat	CO_2 LP
030	6.5 - 7.5	7.5 - 8.5
045	7.0 - 9.0	8.0 - 10.0
070		
090		
110		
The maximum carbon monoxide reading should not exceed 100 pm.		

High Altitude Information

NOTE - *In Canada, certification for installations at elevations over 4500 feet (1372 m) is the jurisdiction of local authorities.*

Units may be installed at altitudes up to 10,000 ft. above sea level. See “TABLE 14” for de-rate manifold values. Units installed at altitude of 7501 - 10,000 feet require an orifice change. Units installed at altitude of 4501 - 10,000 feet require a pressure switch change which can be ordered separately. “TABLE 15” lists conversion kit and pressure switch requirements at varying altitudes.

The combustion air pressure switch is factory-set and requires no adjustment.

NOTE - *A natural to LP/propane gas changeover kit is necessary to convert this unit. Refer to the changeover kit installation instruction for the conversion procedure.*

TABLE 14

Manifold and Supply Line Pressure 0-10,000ft.

ML193 Unit	Gas	Manifold Pressure in. wg.					Supply Line Pressure in. w.g. 0 - 10000 ft.	
		0 - 4500 ft	4501 - 5500 ft	5501 - 6500 ft	6501 - 7500 ft	7501 - 10,000 ft		
All Models	Natural	3.5	3.3	3.2	3.1	3.5	4.5	13.0
	L.P. Propane	10.0	9.4	9.1	8.9	10.0	11.0	13.0

NOTE - A natural to L.P. propane gas changeover kit is necessary to convert this unit. Refer to the changeover kit installation instruction for the conversion procedure.

TABLE 15

Conversion Kit and Pressure Switch Requirements at Varying Altitudes

ML193 Model	Natural to LP/ Propane	High Altitude Natural Burner Orifice Kit	LP/Propane to Natural	High Altitude LP/ Propane Burner Orifice Kit	High Altitude Pressure Switch	
	0 - 7500 ft (0 - 2286m)	7501 - 10,000 ft (2286 - 3038m)	0 - 7500 ft (0 - 2286m)	7501 - 10,000 ft (2286 - 3038m)	4501 - 7500 ft (1373 - 2286m)	7501 -10,000 ft (2286 - 3048m)
-030	17H63	14C90	N/A	17H66	11U65	11U66
-045	*11K49	73W37	*73W81	*11K44		
-070						
-090						
-110						
* Conversion requires installation of a gas valve manifold spring which is provided with the gas conversion kit. Pressure switch is factory set. No adjustment necessary. All models use the factory-installed pressure switch from 0-4500 feet (0-1370 m).						

Testing for Proper Venting and Sufficient Combustion Air for Non-Direct Vent Applications

⚠ WARNING

. CARBON MONOXIDE POISONING HAZARD!

Failure to follow the steps outlined below for each appliance connected to the venting system being placed into operation could result in carbon monoxide poisoning or death.

The following steps shall be followed for each appliance connected to the venting system being placed into operation, while all other appliances connected to the venting system are not in operation.

After the ML193UHE gas furnace has been started, the following test should be conducted to ensure proper venting and sufficient combustion air has been provided to the ML193UHE as well as to other gas-fired appliances which are separately vented.

If a ML193UHE furnace replaces a Category I furnace which was commonly vented with another gas appliance, the size of the existing vent pipe for that gas appliance must be checked. Without the heat of the original furnace flue products, the existing vent pipe is probably oversized for the single water heater or other appliance. The vent should be checked for proper draw with the remaining appliance.

The test should be conducted while all appliances (both in operation and those not in operation) are connected to the venting system being tested. If the venting system has been installed improperly, or if provisions have not been made for sufficient amounts of combustion air, corrections must be made as outlined in the previous section.

1 - Seal any unused openings in the venting system.

2 - Visually inspect the venting system for proper size and horizontal pitch. Determine there is no blockage or restriction, leakage, corrosion, or other deficiencies which could cause an unsafe condition.

3 - To the extent that it is practical, close all building doors and windows and all doors between the space in which the appliances connected to the venting system are located and other spaces of the building.

4 - Close fireplace dampers.

5 - Turn on clothes dryers and any appliances not connected to the venting system. Turn on any exhaust fans, such as range hoods and bathroom exhausts, so they will operate at maximum speed. Do not operate a summer exhaust fan.

6 - Follow the lighting instruction to place the appliance being inspected into operation. Adjust thermostat so appliance will operate continuously.

7 - Use the flame of match or candle to test for spillage of flue gases at the draft hood relief opening after 5 minutes of main burner operation.

8 - If improper venting is observed during any of the above tests, the venting system must be corrected or sufficient combustion/make-up air must be provided. The venting system should be re-sized to approach the minimum size as determined by using the appropriate tables in appendix G in the current standards of the National Fuel Gas Code ANSI-Z223.1/NPFA 54 in the U.S.A., and the appropriate Natural Gas and Propane appliances venting sizing tables in the current standard of the CSA-B149 Natural Gas and Propane Installation Codes in Canada.

9 - After determining that each appliance remaining connected to the common venting system properly vents when tested as indicated in step 3, return doors, windows, exhaust fans, fireplace dampers and any other gas-burning appliance to their previous condition of use.

Other Unit Adjustments

Primary Limit.

The primary limit is located on the heating compartment vestibule panel. This limit is factory set and requires no adjustment.

Flame Rollout Switches (Two)

These manually reset switches are located on the front of the burner box.

Pressure Switch

The pressure switch is located in the heating compartment on the cold end header box. This switch checks for proper combustion air inducer operation before allowing ignition trial. The switch is factory-set and must not be adjusted.

Temperature Rise

After the furnace has been started and supply and return air temperatures have been allowed to stabilize, check the temperature rise. If necessary, adjust the blower speed to maintain the temperature rise within the range shown on the unit nameplate. See 'Allowable Heating Speeds" table on page 37. Increase the blower speed to decrease the temperature. Decrease the blower speed to increase the temperature rise. Failure to adjust the temperature rise may cause erratic limit operation.

Fan Control

Ignition Control 103217-03

The fan on time of 30 seconds is not adjustable. The fan off delay (amount of time that the blower operates after the heat demand has been satisfied) may be adjusted by changing the jumper position across the five pins on the integrated control. The unit is shipped with a factory fan off setting of 120 seconds. The fan off delay affects comfort and is adjustable to satisfy individual applications. Adjust the fan off delay to achieve a supply air temperature between 90° and 110°F at the moment that the blower is de-energized. Longer off delay settings provide lower return air temperatures; shorter settings provide higher return air temperatures. See "FIGURE 62".

Ignition Control 107163-01

The heat fan-on time of 30 seconds is not adjustable The heat fan-off delay (amount of time that the blower operates after the heat demand has been satisfied) may be adjusted by changing the two position dip switch on the integerated control, to one of four slections. Blower off delay is factory set at 90 seconds. For other blower off delay settings, please refer to the following chart:

Blower Delay Select		
	SW2-1	SW2-2
60	OFF	ON
90	OFF	OFF
120	ON	OFF
180	ON	ON
Factory Setting is 90		

HEAT FAN-OFF TIME IN SECONDS

JUMPER POSITION		HEAT OFF DELAY
PIN1	PIN2	60
PIN2	PIN3	90
PIN3	PIN4	120
PIN4	PIN5	180
NO JUMPER		180

To adjust fan-off timing, reposition jumper across pins to achieve desired setting.

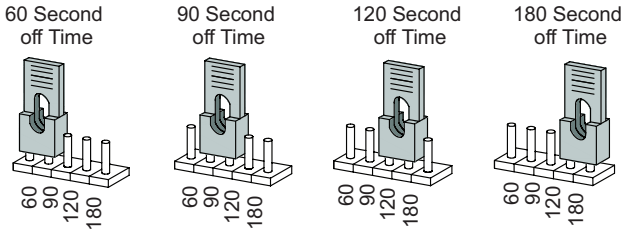

FIGURE 62

Electrical

1 - Check all wiring for loose connections.

2 - Check for the correct voltage at the furnace operating). Correct voltage is 120VAC + 10%

3 - Check amp-draw on the blower motor with blower access panel in place.

Motor Nameplate_____Actual_____

Blower Speeds

Follow the steps below to change the blower speeds.

1 - Turn off electrical power to furnace.

2 - Remove blower access panel.

3 - Disconnect existing speed tap at integrated control speed terminal.

NOTE - *Termination of any unused motor leads must be insulated.*

4 - Place unused blower speed tap on integrated control "PARK" terminal or insulate.

5 - Refer to blower speed selection chart on unit wiring diagram for desired heating or cooling speed. See Product Specifications bulletin for blower performance tables. See "" for allowable heating speeds.

6 - Connect selected speed tap at integrated control speed terminal.

7 - Resecure blower access panel.

8 - Turn on electrical power to furnace.

9 - Recheck temperature rise.

Electronic Ignition

The integrated control has an added feature of an internal Watchguard control. The feature serves as an automatic reset device for integrated control lockout caused by ignition failure. This type of lockout is usually due to low gas line pressure. After one hour of continuous thermostat demand for heat, the Watchguard will break and remake thermostat demand to the furnace and automatically reset the integrated control to begin the ignition sequence.

Exhaust and Air Intake Pipe

1 - Check exhaust and air intake connections for tightness and to make sure there is no blockage.

2 - Is pressure switch closed? Obstructed exhaust pipe will cause unit to shut off at pressure switch. Check termination for blockages.

3 - Obstructed pipe or termination may cause rollout switches to open. Reset manual flame rollout switches on burner box assembly if necessary.

Service

⚠ WARNING

ELECTRICAL SHOCK, FIRE,
OR EXPLOSION HAZARD.

Failure to follow safety warnings exactly could result in dangerous operation, serious injury, death or property damage. Improper servicing could result in dangerous operation, serious injury, death, or property damage. Before servicing, disconnect all electrical power to furnace. When servicing controls, label all wires prior to disconnecting. Take care to reconnect wires correctly. Verify proper operation after servicing.

⚠ WARNING

The blower access panel must be securely in place when the blower and burners are operating. Gas fumes, which could contain carbon monoxide, can be drawn into living space resulting in personal injury or death.

Annual Furnace Maintenance

At the beginning of each heating season, and to comply with the **Lennox Limited Warranty,** your system should be checked as follows:

1 - Check wiring for loose connections, voltage at indoor unit and amperage of indoor motor.

2- Check the condition of the belt and shaft bearings if applicable.

3- Inspect all gas pipe and connections for leaks.

4- Check the cleanliness of filters and change if necessary (monthly).

5- Check the condition and cleanliness of burners and heat exchanger and clean if necessary.

6- Check the cleanliness of blower assembly and clean the housing, blower wheel and blower motor if necessary .

7- Inspect the condensate drain and trap for leaks and cracks. The drain and trap must also be cleaned and the trap must be primed with water. Inspect the rubber hoses connected to the pressure switches for cracks or loose connections, replace as necessary. Remove the rubber hoses from the cold end header box and inspect for any blockage, clean as needed. If strainers are installed in the hoses remember to remove and clean before reinstalling the hoses.

8- Evaluate the heat exchanger integrity by inspecting the heat exchanger per the AHRI heat exchanger inspection procedure. This procedure can be viewed at www.ahrinet.org

9- Ensure sufficient combustion air is available to the furnace. Fresh air grilles and louvers (on the unit and in the room where the furnace is installed) must be properly sized, open and unobstructed to provide combustion air.

10-Inspect the furnace intake and exhaust pipes to make sure they are in place, structurally sound, without holes, blockage or leakage and the exhaust pipe is sloped toward the furnace. Inspect terminations to ensure they are free of obstructions and are structurally sound. Inspect the furnace return air duct connection to ensure the duct is sealed to the furnace. Check for air leaks on supply and return ducts and seal where necessary.

11- Inspect the furnace return air duct connection to ensure the duct is sealed to the furnace. Check for air leaks on supply and return ducts and seal where necessary.

12- Check the condition of the furnace cabinet insulation and repair if necessary.

13- Perform a complete combustion analysis during the furnace inspection to ensure proper combustion and operation. Consult Service Literature for proper combustion values.

14- Verify operation of CO detectors and replace batteries as required.

Perform a general system test. Turn on the furnace to check operating functions such as the start-up and shut-off operation.

1 - Check the operation of the ignition system, inspect and clean flame sensor. Check microamps before and after. Check controls and safety devices (gas valve, flame sensor, temperature limits). Consult Service Manual for proper operating range. Thermal Limits should be checked by restricting airflow and not disconnecting the indoor blower. For additional details, please see Service and Application Note H049.

2 - Verify that system total static pressure and airflow settings are within specific operating parameters.

3 - Clock gas meter to ensure that the unit is operating at the specified firing rate. Check the supply pressure and the manifold pressure. If manifold pressure adjustment is necessary, consult the Service Literature for unit specific information on adjusting gas pressure. Not all gas valves are adjustable. Verify correct temperature rise.

Winterizing and Condensate Trap Care

1 - Turn off power to the furnace.

2 - Have a shallow pan ready to empty condensate water.

3 - Remove the clean out cap from the condensate trap and empty water. Inspect the trap then reinstall the clean out cap.

Cleaning the Burner Assembly

1 - Turn off gas and electrical power to the furnace. Remove heating compartment access panel.

2 - Disconnect the gas supply line from the gas valve.

3 - Disconnect and label wires from gas valve.

4 - Disconnect ignitor wiring at 2 circuit plug.

5 - Disconnect and label wires from rollout switch.

6 - Disconnect and label flame sensor wire.

7 - Disconnect and label ground wire from burner/manifold assembly.

8 - Remove four screws that secures burner/manifold assembly to vestibule. Remove the assembly and make note not to allow ignitor plate to dislodge from the assembly.

9 - Gently clean the face of the burners using the soft brush attachment on a vacuum cleaner. Visually inspect the inside of the burners and crossovers for any blockage caused by foreign matter. Remove any blockage

10 - Reinstall the burner/manifold assembly using the existing four screws. Burners are self aligning to center of clam shells.

11 - Reconnect ground wire.

12 - Reconnect flame sensor wire.

13 - Reconnect rollout switch wires.

14 - Reconnect ignitor wires.

15 - Reconnect gas valve wires.

16 - Reconnect gas supply line to gas valve.

17 - Refer to instructions on verifying gas and electrical connections when re-establishing supplies

18 - Follow instructions to place furnace in operation. Run furnace 5 minutes to ensure burners are clean and operating correctly.

19 - Replace heating compartment access panel.

Repair Parts List

The following repair parts are available through Lennox dealers. When ordering parts, include the complete furnace model number listed on the CSA nameplate -- Example: ML193UH045XE36B-01. **All service must be performed by a licensed professional installer (or equivalent), service agency, or gas supplier.**

Cabinet Parts

Upper access panel
Blower access panel
Top Cap

Control Panel Parts

Transformer
Integrated control board
Door interlock switch

Blower Parts

Blower wheel
Motor
Motor mounting frame
Motor capacitor
Blower housing cutoff plate

Heating Parts

Flame Sensor
Heat exchanger assembly
Gas manifold
Combustion air inducer
Gas valve
Main burner cluster
Main burner orifices
Pressure switch
Ignitor
Primary limit control
Flame rollout switches

LENNOX

UNIT SET UP
(typical)

Furnace:
Model Number_____

Serial Number_____

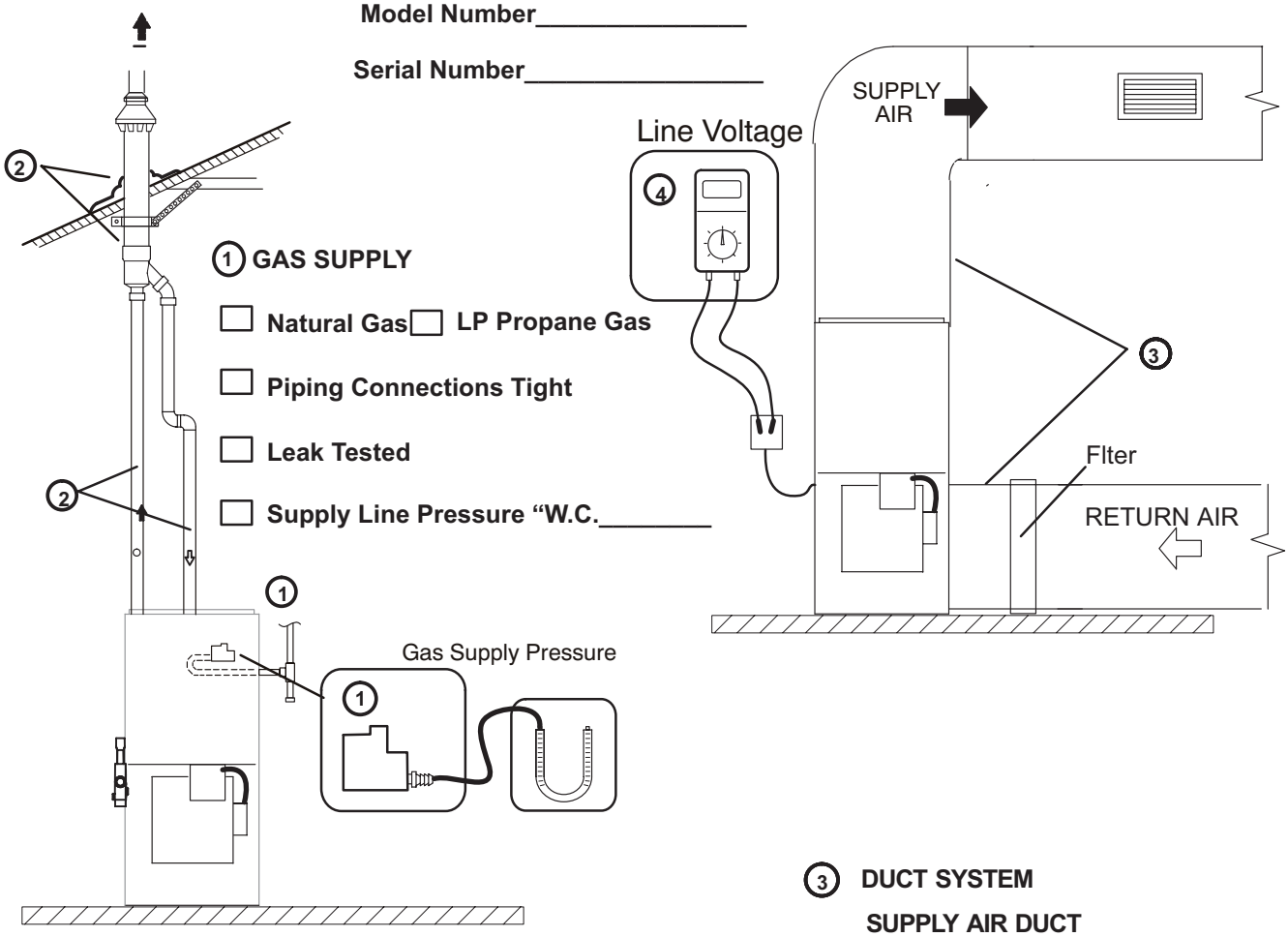

1 GAS SUPPLY

- ☐ Natural Gas ☐ LP Propane Gas
- ☐ Piping Connections Tight
- ☐ Leak Tested
- ☐ Supply Line Pressure "W.C._____

2 INTAKE / EXHAUST PIPE

- ☐ All Joints Primed and Glued
- ☐ Terminations Installed Properly
- ☐ Horizontal Pipes Sloped (if applicable)
- ☐ Condensate Trap Primed / Line Sloped
- ☐ Pipes Supported
- ☐ Heat Cable Installed and Operable (if applicable)

3 DUCT SYSTEM

SUPPLY AIR DUCT

- ☐ Sealed
- ☐ Insulated (if necessary)

RETURN DUCT

- ☐ Sealed
- ☐ Filter Installed and Clean
- ☐ Grilles Unobstructed

4 VOLTAGE CHECK

Supply Voltage _____

LENNOX

UNIT OPERATION

HEATING MODE

1. GAS MANIFOLD PRESSURE "W.C._____
2. COMBUSTION SAMPLE CO_2%_____CO PPM_____
3. INDOOR BLOWER AMPS_____
4. TEMPERATURE RISE
   - Supply Duct Temperature _____
   - Return Duct Temperature – _____
   - Temperature Rise = _____
5. TOTAL EXTERNAL STATIC
   - Supply External Static _____
   - Return External Static + _____
   - Total External Static = _____
6. CONDENSATE LINE
   - ☐ Leak Free
7. VENT PIPE
   - ☐ Leak Free

COOLING MODE

3. INDOOR BLOWER AMPS_____
4. TEMPERATURE DROP
   - Return Duct Temperature _____
   - Supply Duct Temperature – _____
   - Temperature Drop = _____
5. TOTAL EXTERNAL STATIC (dry coil)
   - Supply External Static _____
   - Return External Static + _____
   - Total External Static = _____
8. DRAIN LINE
   - ☐ Leak Free
9. THERMOSTAT
   - ☐ Adjusted and Programmed
   - ☐ Explained Operation to Owner

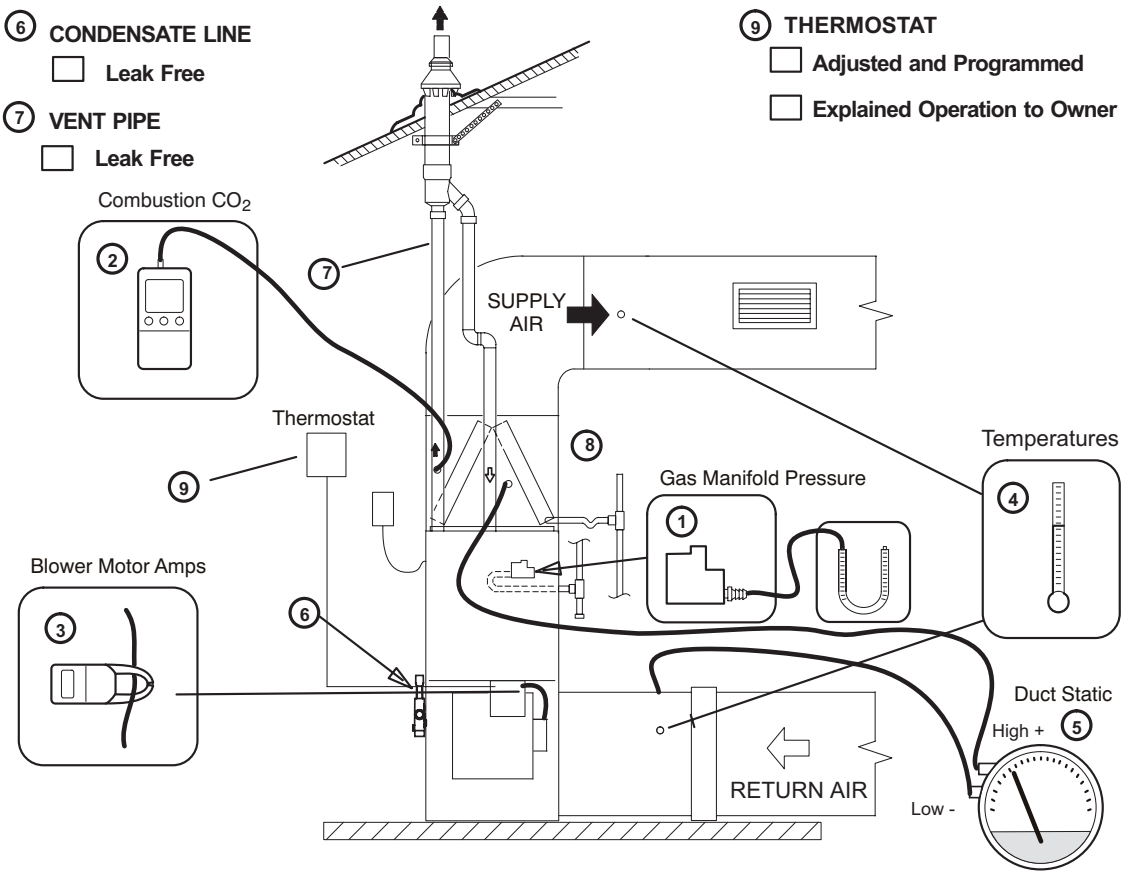

Contractor's: Name_____Telephone_____Checklist Completed_____

Job Address_____-_____Technician's Name_____

Requirements for Commonwealth of Massachusetts

Modifications to NFPA-54, Chapter 10

Revise NFPA-54 section 10.8.3 to add the following requirements:

For all side wall, horizontally vented, gas-fueled equipment installed in every dwelling, building or structure used in whole or in part for residential purposes, including those owned or operated by the Commonwealth and where the side wall exhaust vent termination is less than seven (7) feet above the finished grade in the area of the venting, including but not limited to decks and porches, the following requirements shall be satisfied:

1 - INSTALLATION OF CARBON MONOXIDE DETECTORS. At the time of installation of the side wall, horizontally vented, gas-fueled equipment, the installing plumber or gasfitter shall observe that a hard-wired carbon monoxide detector with an alarm and battery backup is installed on the floor level where the gas equipment is to be installed. In addition, the installing plumber or gasfitter shall observe that a battery-operated or hard-wired carbon monoxide detector with an alarm is installed on each additional level of the dwelling, building or structure served by the side wall, horizontally vented, gas-fueled equipment. It shall be the responsibility of the property owner to secure the services of qualified licensed professionals for the installation of hard-wired carbon monoxide detectors.

a. In the event that the side wall, horizontally vented, gas-fueled equipment is installed in a crawl space or an attic, the hard-wired carbon monoxide detector with alarm and battery back-up may be installed on the next adjacent floor level.

b. In the event that the requirements of this subdivision cannot be met at the time of completion of installation, the owner shall have a period of thirty (30) days to comply with the above requirements; provided, however, that during said thirty (30) day period, a battery-operated carbon monoxide detector with an alarm shall be installed.

2 - APPROVED CARBON MONOXIDE DETECTORS. Each carbon monoxide detector as required in accordance with the above provisions shall comply with NFPA 720 and be ANSI/UL 2034 listed and IAS certified.

3 - SIGNAGE. A metal or plastic identification plate shall be permanently mounted to the exterior of the building at a minimum height of eight (8) feet above grade directly in line with the exhaust vent terminal for the horizontally vented, gas-fueled heating appliance or equipment. The sign shall read, in print size no less than one-half (1/2) inch in size, “GAS VENT DIRECTLY BELOW. KEEP CLEAR OF ALL OBSTRUCTIONS.”4

4 - INSPECTION. The state or local gas inspector of the side wall, horizontally vented, gas-fueled equipment shall not approve the installation unless, upon inspection, the inspector observes carbon monoxide detectors and signage installed in accordance with the provisions of 248 CMR 5.08(2)(a) 1 through 4.

EXEMPTIONS: The following equipment is exempt from 24 CMR 5.08(2)(a) 1 through 4:

1 - The equipment listed in Chapter 10 entitled “Equipment Not Required to Be Vented” in the most current edition of NFPA 54 as adopted by the Board; and

2 - Product Approved side wall, horizontally vented, gasfueled equipment installed in a room or structure separate from the dwelling, building or structure used in whole or in part for residential purposes.

MANUFACTURER REQUIREMENTS -

GAS EQUIPMENT VENTING SYSTEM PROVIDED.

When the manufacturer of Product Approved side wall, horizontally vented, gas-fueled equipment provides a venting system design or venting system components with the equipment, the instructions provided by the manufacturer for installation of the equipment and the venting system shall include:

1 - Detailed instructions for the installation of the venting system design or the venting system components: and

2 - A complete parts list for the venting system design or venting system.

MANUFACTURER REQUIREMENTS -

GAS EQUIPMENT VENTING SYSTEM NOT PROVIDED.

When the manufacturer of Product Approved side wall, horizontally vented, gas-fueled equipment does not provide the parts for venting the flue gases, but identifies “special venting systems,” the following requirements shall be satisfied by the manufacturer:

1 - The referenced “special venting system” instructions shall be included with the appliance or equipment installation instructions; and

2- The “special venting systems” shall be Product Approved by the Board, and the instructions for that system shall include a parts list and detailed installation instructions.

A copy of all installation instructions for all Product Approved side wall, horizontally vented, gas-fueled equipment, all venting instructions, all parts lists for venting instructions, and/or all venting design instructions shall remain with the appliance or equipment at the completion of the installation.

FOR THE PROVINCE OF ONTARIO, HORIZONTAL SIDEWALL VENT APPLICATIONS ONLY

For exterior horizontal venting applications, the 2” X 1.5” reducer for 2” venting at the point where the exhaust pipe exits the structure is not required in direct or non-direct vent applications in the Province of Ontario. In these applications, the vent should be oriented such that the exhaust plume is unobjectionable. If the installation requires more separation between the flue gases and the building structure, a reducer may be installed on the exhaust pipe to increase the flue gas velocity.

ADDENDUM FOR ALL PROVINCES OF CANADA

See below for venting in all provinces of Canada. Lennox approves the following termination for use in all provinces of Canada.

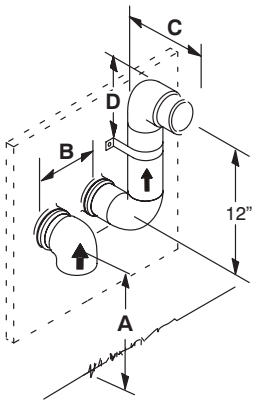

	2” (51MM) Vent Pipe	3” (76MM) Vent Pipe
A – Clearance above grade or average snow accumulation	12” (305 mm) Min.	12” (305 mm) Min.
B – Horizontal separation between intake and exhaust	6” (152 mm) Min. 24” (610 mm) Max.	6” (152 mm) Min. 24” (610 mm) Max.
C – Exhaust pipe length	Per: Saskatchewan Code of Practice	
D – Wall support distance from top of each pipe (intake/exhaust)	6” (152 mm) Max.	6” (152 mm) Max.

NOTE – Flue gas may be acidic and may adversely affect some building materials. If flue gases impinge on the building materials, a corrosion–resistant shield should be used to protect the wall surface. The shield should be constructed using wood, sheet metal or other suitable material. All seams, joints, cracks, etc. in affected area, should be sealed using an appropriate sealant.

Blower Data

ML193UH030XE36B PERFORMANCE (Less Filter)

External Static Pressure in. w.g.	Air Volume / Watts at Various Blower Speeds									
	High (Black)		Medium-High (Brown)		Medium (Blue)		Medium-Low (Yellow)		Low (Red)	
	cfm	Watts	cfm	Watts	cfm	Watts	cfm	Watts	cfm	Watts
0.00	- - -	- - -	- - -	- - -	- - -	- - -	- - -	- - -	- - -	- - -
0.10	1333	338	1159	211	943	127	725	74	661	63
0.20	1311	344	1120	214	903	133	681	78	512	52
0.30	1270	350	1093	225	860	139	631	82	458	57
0.40	1244	358	1053	231	827	145	586	87	385	61
0.50	1223	369	1028	239	784	150	535	93	310	65
0.60	1191	376	993	247	747	156	472	98	- - -	- - -
0.70	1165	387	966	254	709	163	410	102	- - -	- - -
0.80	1138	395	929	261	669	168	351	107	- - -	- - -
0.90	1064	376	904	270	619	175	- - -	- - -	- - -	- - -
1.00	858	314	869	276	574	180	- - -	- - -	- - -	- - -

ML193UH045XE36B PERFORMANCE (Less Filter)

External Static Pressure in. w.g.	Air Volume / Watts at Various Blower Speeds									
	High (Black)		Medium-High (Brown)		Medium (Blue)		Medium-Low (Yellow)		Low (Red)	
	cfm	Watts	cfm	Watts	cfm	Watts	cfm	Watts	cfm	Watts
0.00	1413	333	1301	263	1157	191	929	108	778	71
0.10	1385	341	1270	270	1126	199	891	114	734	76
0.20	1357	349	1238	278	1096	206	853	120	690	81
0.30	1331	359	1209	286	1064	214	814	127	642	86
0.40	1304	369	1182	295	1031	221	776	133	596	92
0.50	1277	379	1151	303	1001	230	736	140	550	97
0.60	1251	385	1123	312	969	237	698	145	504	101
0.70	1227	397	1095	321	936	244	657	151	459	106
0.80	1208	412	1066	329	903	252	619	156	414	111
0.90	1158	403	1037	337	871	259	581	161	359	116
1.00	983	329	990	337	837	266	543	166	322	120

ML193UH070XE36B PERFORMANCE (Less Filter)

External Static Pressure in. w.g.	Air Volume / Watts at Various Blower Speeds									
	High (Black)		Medium-High (Brown)		Medium (Blue)		Medium-Low (Yellow)		Low (Red)	
	cfm	Watts	cfm	Watts	cfm	Watts	cfm	Watts	cfm	Watts
0.00	1448	304	1311	235	1177	170	939	100	805	65
0.10	1411	313	1280	245	1139	180	899	105	748	70
0.20	1374	322	1249	255	1101	190	859	110	691	75
0.30	1334	329	1220	263	1061	196	817	117	638	81
0.40	1305	339	1179	268	1029	201	770	123	580	86
0.50	1273	348	1156	278	994	212	720	128	531	91
0.60	1244	355	1123	288	950	217	677	135	476	96
0.70	1214	367	1084	294	916	223	627	142	423	100
0.80	1189	375	1045	302	889	233	581	145	366	105
0.90	1157	384	1016	310	842	239	538	151	- - -	- - -
1.00	1124	392	978	318	807	247	489	155	- - -	- - -

Blower Data

ML193UH090XE36C PERFORMANCE (Less Filter)

External Static Pressure in. w.g.	Air Volume / Watts at Various Blower Speeds									
	High (Black)		Medium-High (Brown)		Medium (Blue)		Medium-Low (Yellow)		Low (Red)	
	cfm	Watts	cfm	Watts	cfm	Watts	cfm	Watts	cfm	Watts
0.00	1478	303	1358	236	1211	173	977	98	863	72
0.10	1447	313	1326	246	1177	182	935	105	794	74
0.20	1416	324	1293	256	1143	191	893	113	725	76
0.30	1389	335	1263	266	1109	200	852	119	680	82
0.40	1359	344	1234	276	1077	208	812	126	628	88
0.50	1321	362	1202	285	1042	217	770	133	578	94
0.60	1332	355	1170	294	1012	225	725	139	531	99
0.70	1302	363	1140	303	978	233	683	146	483	103
0.80	1274	374	1109	312	942	240	642	153	434	108
0.90	1244	383	1079	320	906	248	602	158	383	113
1.00	1214	392	1047	329	869	256	562	163	345	117

ML193UH090XE48C PERFORMANCE (Less Filter)

External Static Pressure in. w.g.	Air Volume / Watts at Various Blower Speeds									
	High (Black)		Medium-High (Brown)		Medium (Blue)		Medium-Low (Yellow)		Low (Red)	
	cfm	Watts	cfm	Watts	cfm	Watts	cfm	Watts	cfm	Watts
0.00	1743	385	1534	267	1411	212	1328	181	1203	141
0.10	1705	394	1492	277	1369	222	1283	190	1155	149
0.20	1668	404	1451	287	1326	232	1239	199	1107	157
0.30	1633	415	1413	297	1285	241	1195	208	1062	166
0.40	1598	426	1372	306	1241	250	1150	216	1008	174
0.50	1561	437	1333	316	1198	258	1103	224	956	181
0.60	1526	447	1293	326	1152	268	1054	233	904	188
0.70	1491	458	1248	335	1107	276	1005	241	859	195
0.80	1454	469	1207	344	1061	285	966	249	820	202
0.90	1432	489	1166	353	1026	292	926	256	779	209
1.00	1335	469	1129	363	987	300	888	264	729	217

Blower Data

ML193UH110XE48C PERFORMANCE (Less Filter)

External Static Pressure in. w.g.	Air Volume / Watts at Various Blower Speeds									
	High (Black)		Medium-High (Brown)		Medium (Blue)		Medium-Low (Yellow)		Low (Red)	
	cfm	Watts	cfm	Watts	cfm	Watts	cfm	Watts	cfm	Watts
0.00	1783	351	1579	240	1445	196	1328	165	1232	126
0.10	1736	364	1519	249	1386	204	1287	174	1169	134
0.20	1689	377	1459	258	1327	212	1246	183	1106	142
0.30	1654	390	1429	273	1283	223	1198	191	1055	151
0.40	1607	401	1390	282	1252	232	1145	198	1003	159
0.50	1566	414	1344	290	1196	238	1088	206	944	165
0.60	1538	423	1291	298	1151	246	1045	217	889	174
0.70	1492	432	1248	307	1097	254	1000	224	843	182
0.80	1455	446	1210	316	1059	265	944	231	781	188
0.90	1415	455	1160	324	1010	273	894	239	717	197
1.00	1379	464	1124	336	953	281	841	247	655	204

ML193UH110XE60C PERFORMANCE (Less Filter)

External Static Pressure in. w.g.	Air Volume / Watts at Different Blower Speeds																			
	Bottom Return Air, Side Return Air with Return Air from Both Sides or Return Air from Bottom and One Side.										**Single Side Return Air** − Air volumes in **bold** (over 1800 cfm) require Optional Return Air Base and field fabricated transition to accommodate 20 x 25 x 1 in. air filter in order to maintain proper air velocity.									
	High (Black)		Medium-High (Brown)		Medium (Blue)		Medium-Low (Yellow)		Low (Red)		High (Black)		Medium-High (Brown)		Medium (Blue)		Medium-Low (Yellow)		Low (Red)	
	cfm	Watts	cfm	Watts	cfm	Watts	cfm	Watts	cfm	Watts	cfm	Watts	cfm	Watts	cfm	Watts	cfm	Watts	cfm	Watts
0.00	2142	574	1881	406	1740	313	1630	268	1455	196	2105	568	1874	404	1717	312	1599	262	1429	197
0.10	2095	585	1850	417	1691	326	1576	277	1405	206	2070	588	1838	418	1671	325	1563	276	1382	207
0.20	2048	597	1820	429	1642	340	1523	286	1355	216	2034	608	1802	432	1625	338	1527	289	1336	217
0.30	2019	617	1774	446	1600	352	1479	297	1299	225	1998	624	1760	448	1583	350	1473	302	1288	227
0.40	1991	631	1727	456	1566	364	1427	309	1250	235	1959	636	1711	459	1538	363	1434	312	1245	237
0.50	1942	647	1692	469	1518	376	1398	321	1200	245	1924	653	1675	471	1482	371	1386	323	1188	247
0.60	1903	658	1655	483	1473	387	1350	332	1151	255	1899	669	1639	484	1448	384	1343	334	1139	253
0.70	1868	673	1609	493	1431	398	1307	341	1106	264	1851	682	1592	493	1409	398	1302	345	1089	262
0.80	1840	687	1569	505	1386	407	1270	353	1055	275	1812	695	1557	509	1368	407	1262	355	1042	272
0.90	1796	703	1539	519	1335	419	1223	363	1006	283	1772	706	1519	521	1327	419	1217	365	996	283
1.00	1767	719	1491	528	1299	428	1182	372	938	291	1741	724	1472	529	1284	430	1166	375	945	292