©2023 Lennox Industries Inc.
Dallas, Texas, USA

This manual must be left with the owner for future reference.

⚠ WARNING

Improper installation, adjustment, alteration, service or maintenance can cause property damage, personal injury or loss of life.
Installation and service must be performed by a licensed professional HVAC installer (or equivalent) or service agency.

Specifications

Input voltage	5 VDC
Ambient temperature	23~110°F (-5~43°C)
Ambient humidity	RH40%~RH90%

INSTALLATION/ OPERATION INSTRUCTIONS

M0STAT64Q-2 Indoor Unit Programmable Controller (22U20)

CONTROLS
507644-03
03/2023

⚠ IMPORTANT

Frequent changes to operating mode may cause system malfunction. Allow at least one minute between mode changes to allow the system to stabilize.

Shipping and Packing List

Package 1 of 1 catalog number 22U20 contains:

1 – Wired Controller
1 – Lithium battery (CR2032)
3 – Screws (mount to wall)
2 – Screws (mount to J-box)
2 – Plastic spacers (J-box)
1 – Connection Cable A with connector for all indoor units
1 – Connection Cable B with connector for MMDA/B, MCFA/B, M22A, and M33A/B/C indoor units
1 – Connection Cable C with connector for MWMA/B and 3WMB indoor units
1 – Connection Cable D for MWMC, MWCB, and MWHB indoor units
1 – Installation and operation manual

General

The M0STAT64Q is a wired programmable local controller for mini-split indoor units with convenient timed schedules for daily operation. These instructions are intended as a general guide and do not supersede local codes in any way. Consult authorities having jurisdiction before installation.

Requirements

Be sure that power supply has been turned off before beginning installation. This controller should be used only as described in this manual. Do not install the controller on outside walls (where there is unconditioned space on opposite side of wall) or in locations where direct sunlight may be present.

Dimensions

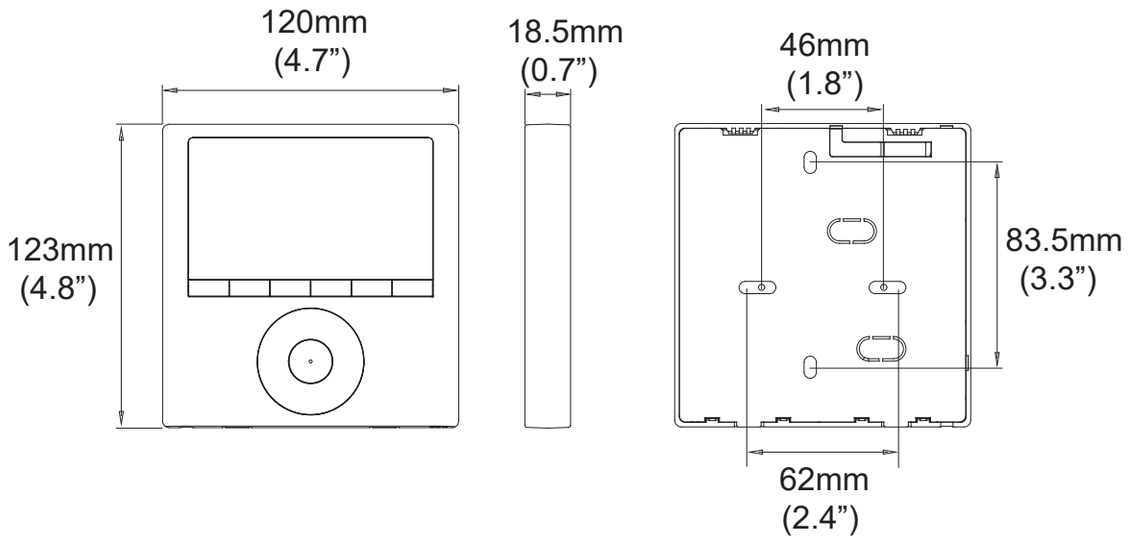

Figure 1. M0STAT64Q Dimensions

Wiring Connections

⚠ WARNING

Be sure that power supply has been turned off before beginning installation.

⚠ CAUTION

Clean controller using a clean, damp cloth. Do not spray cleanser on or around controller.

⚠ WARNING

Do not operate controller with wet hands.

⚠ CAUTION

Do not install controller in areas where heavy oil, vapor, or gases containing sulfur may exist or the controller may be damaged.

⚠ IMPORTANT

Read all of the information in this manual before using this controller. All wiring must conform to local and national building and electrical codes and ordinances. This is a 5 VDC controller. Do not install on voltages higher than 5 VDC.

- This manual provides the installation instructions for this controller. Refer to the included wiring diagrams to connect the controller to the indoor unit.
- The controller uses low voltage. Keep a minimum distance of 12” (305 mm) between low voltage control wire and high voltage power wires.
- Ground the shielded control wiring.

⚠ IMPORTANT

The provided cables must be used. Do not use excessive force while pulling the cable or when making the connections.

- Do not use a megger to test insulation.
- The controller cable length should not exceed 164 ft (50 m).

1. Use the wiring connections illustrations (Figures 2 and 6) to connect the controller to the indoor unit. ***NOTE -*** *Connection details for wall-mounted units differ from the other indoor unit types.*
2. Select the cable exit route from the back of the controller.
3. Include a drip loop in the cable.

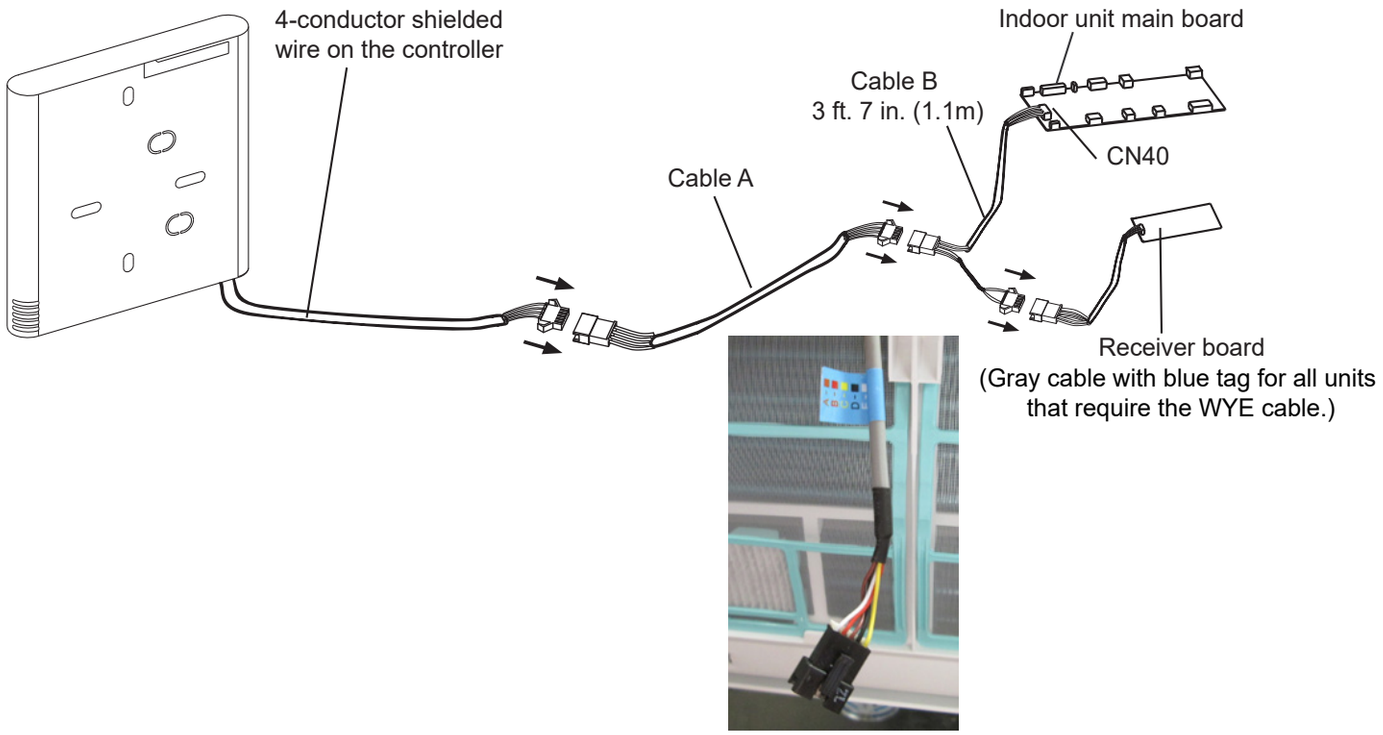

Figure 2. Wiring Connections MMDA/B, MCFA/B, M22A and M33A/B/C

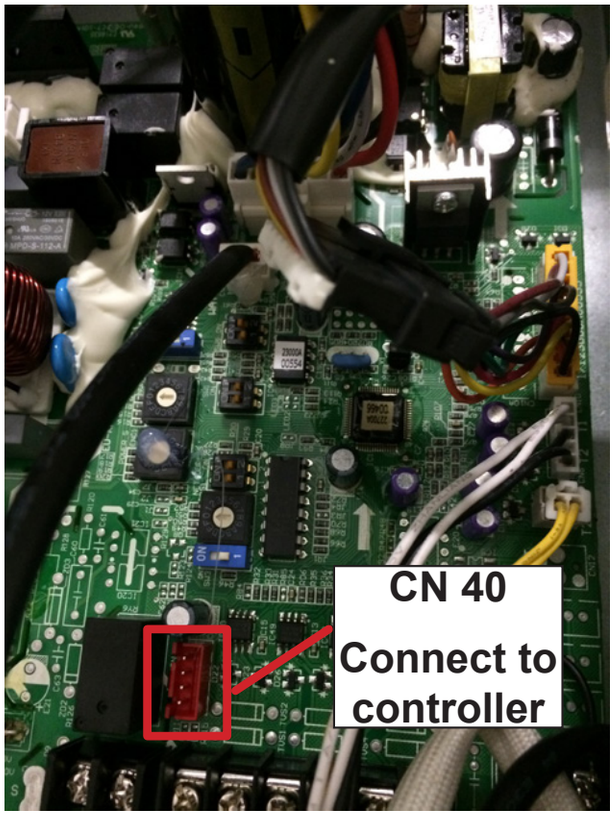

Figure 3. MMDA/B Main Board

Figure 5. MCFA/B Main Board

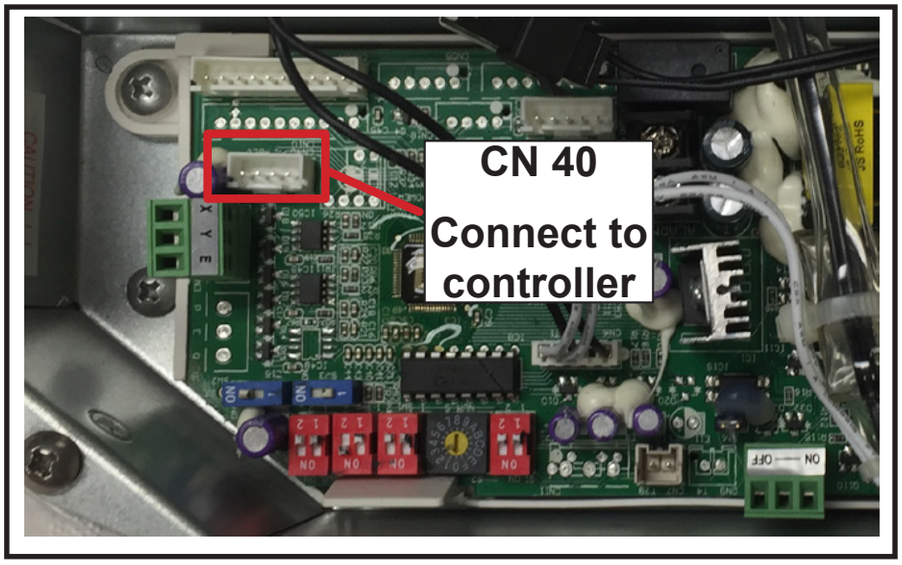

Figure 4. M22A and M33A/B/C Main Board

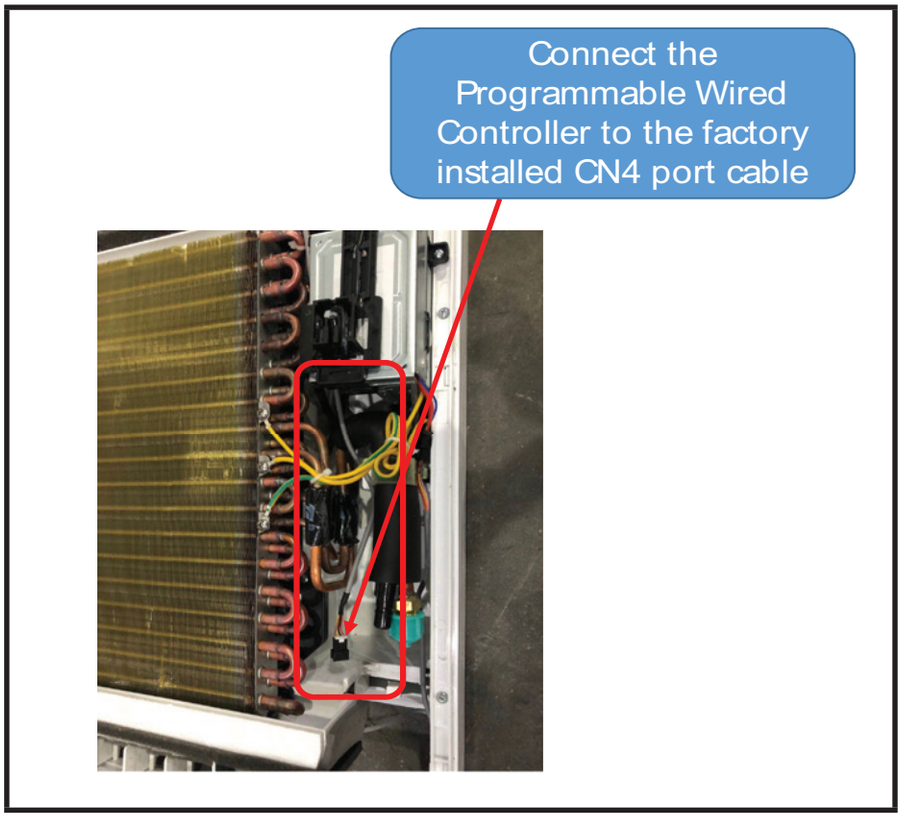

Figure 6. MFMA Main Board

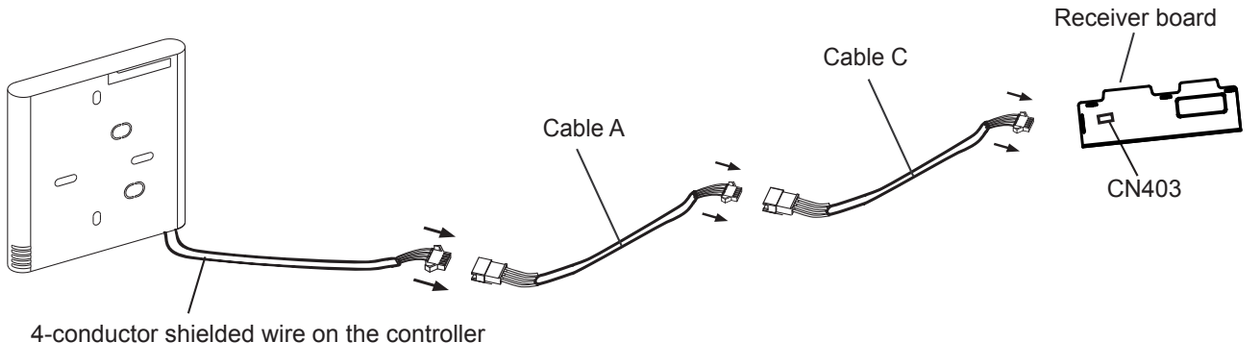

Figure 7. Wiring Connections MWMA/B & 3WMB

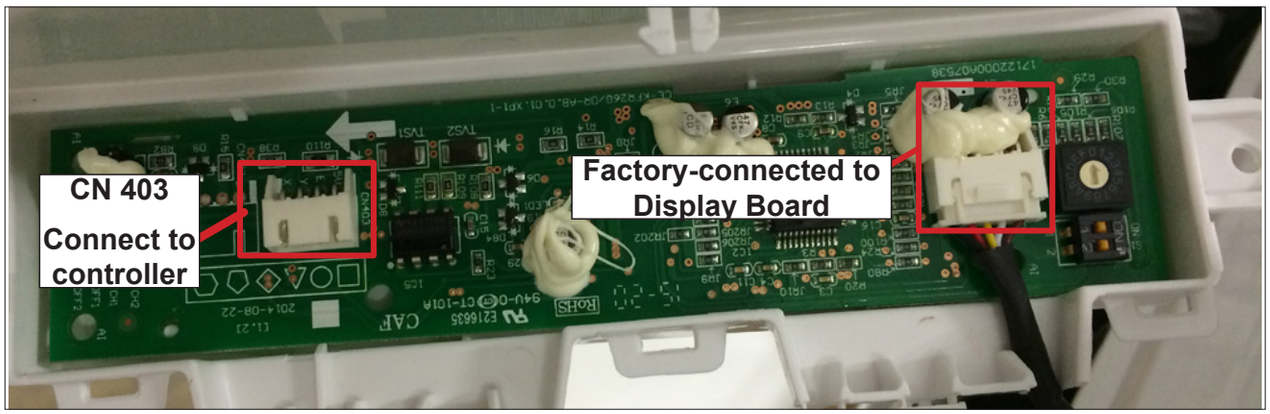

NOTE - *CN 403 is used to connect either the M0STAT64Q local controller OR a centralized control. It is not possible to connect both the M0STAT64Q controller and a centralized control to this unit.*

Figure 8. MWMA/B & 3WMB Receiver Board

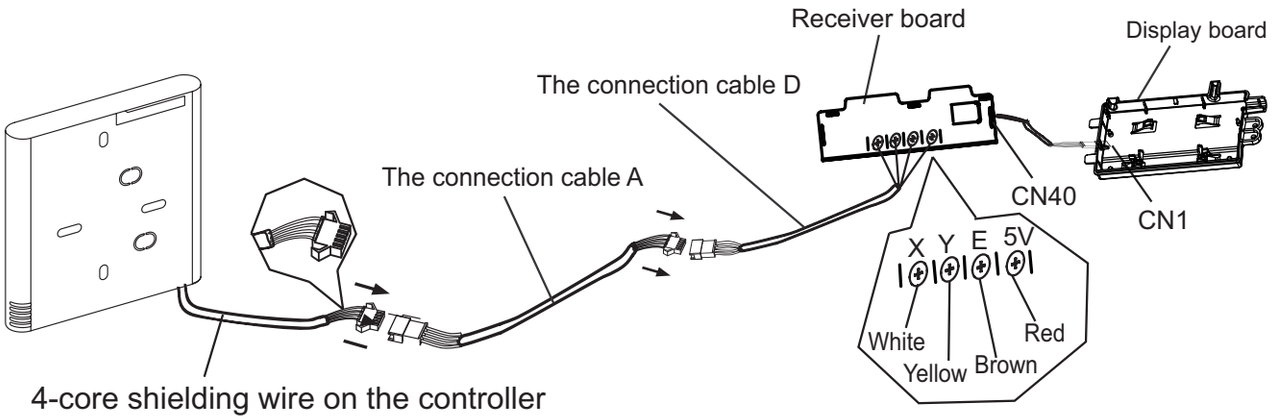

Figure 9. Wiring Connections MWMC, MWCB, and MWHB

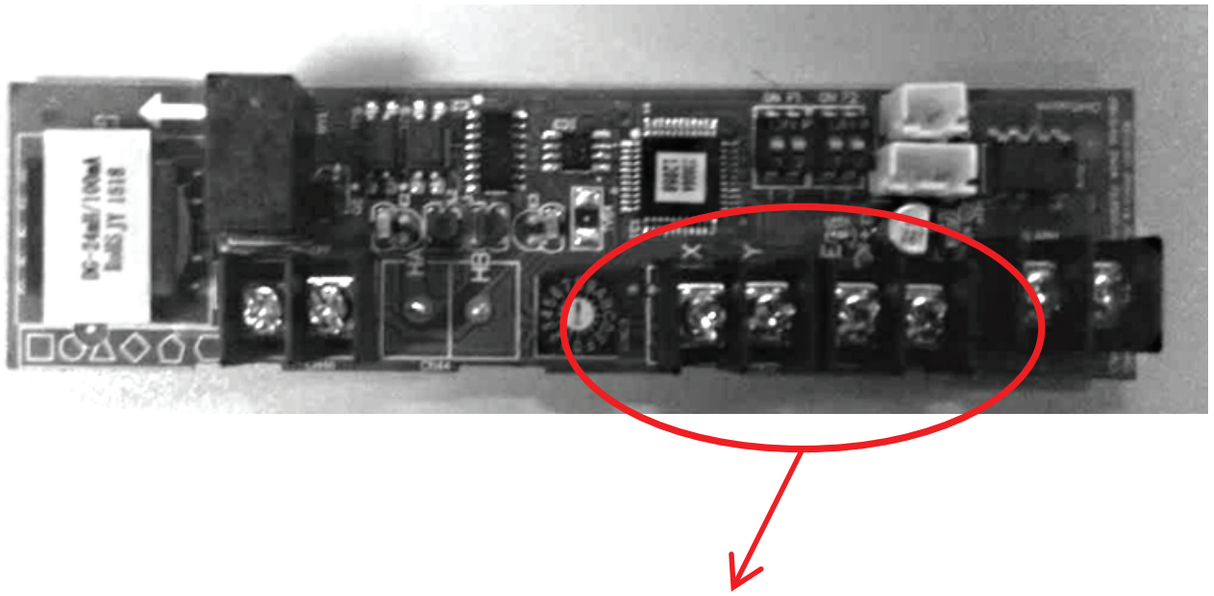

MWMC/MWCB/MWHB receiver board uses terminals for the programmable wired controller.

Figure 10. MWMC, MWCB and MWHB Receiver board

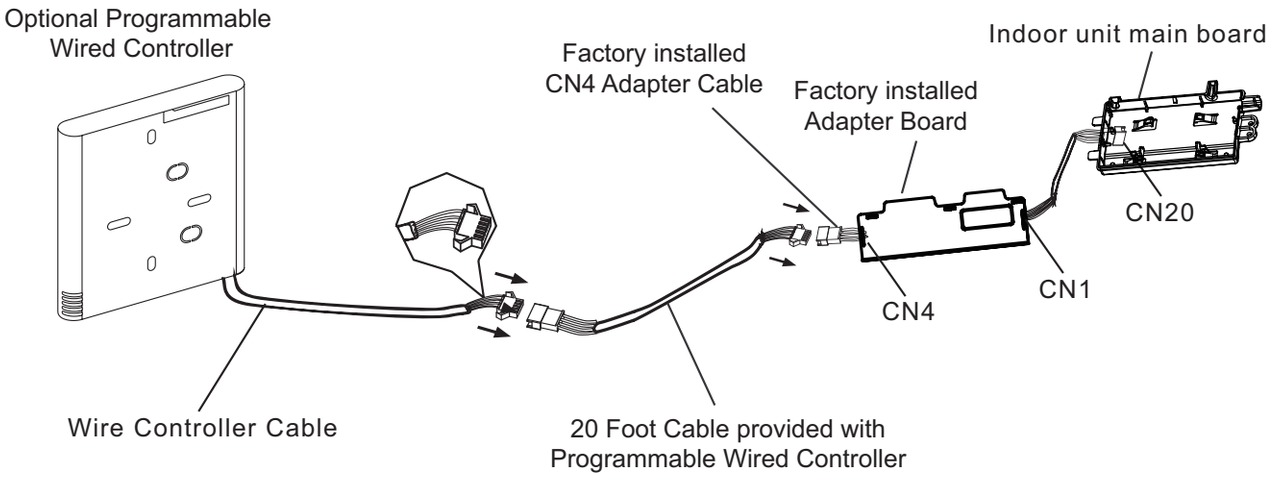

Figure 11. Wiring Connections to MFMA

4. Seal the cable entrance to the controller casing and any wall penetrations to prevent water from entering the controller.

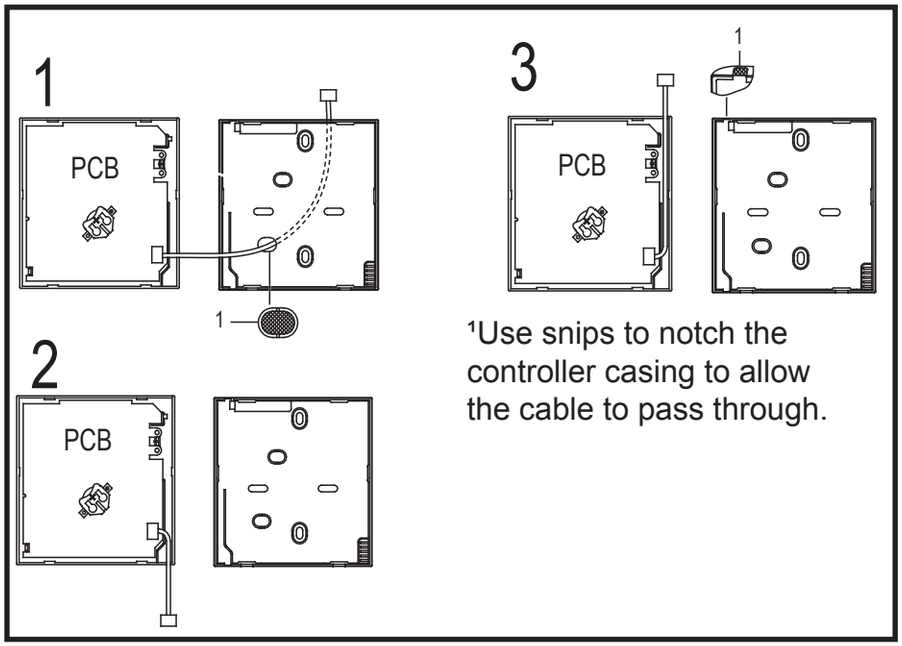

Figure 12. Select Cable Route

5. Reattach the controller to the back plate. Be careful not to pinch or bind the wires.

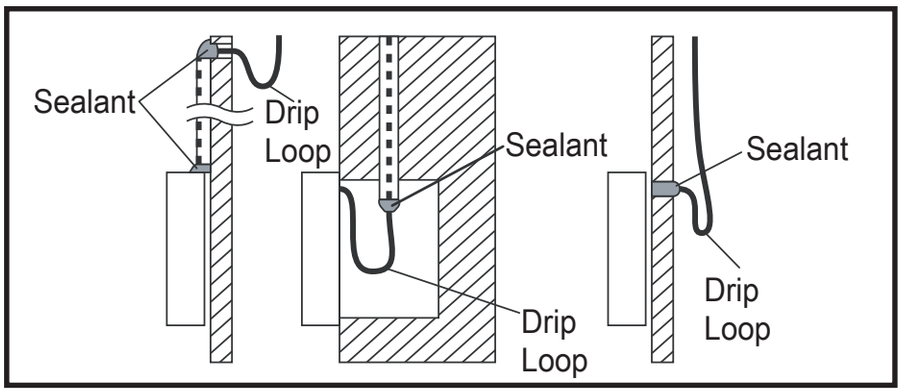

Figure 13. Prevent Water from Entering Controller Casing

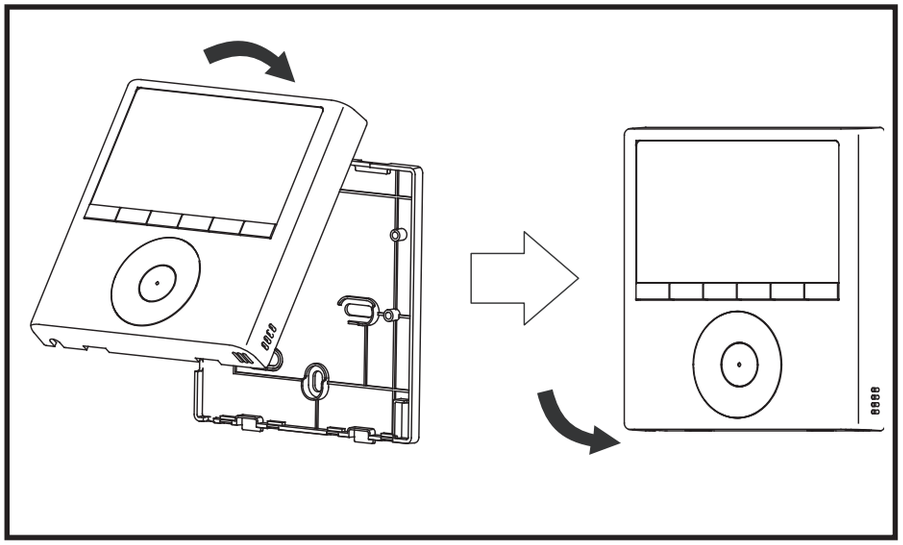

Figure 14. Reattach Controller to Back Plate

Installation

1. Remove the controller from the back plate using a flat-head screwdriver.

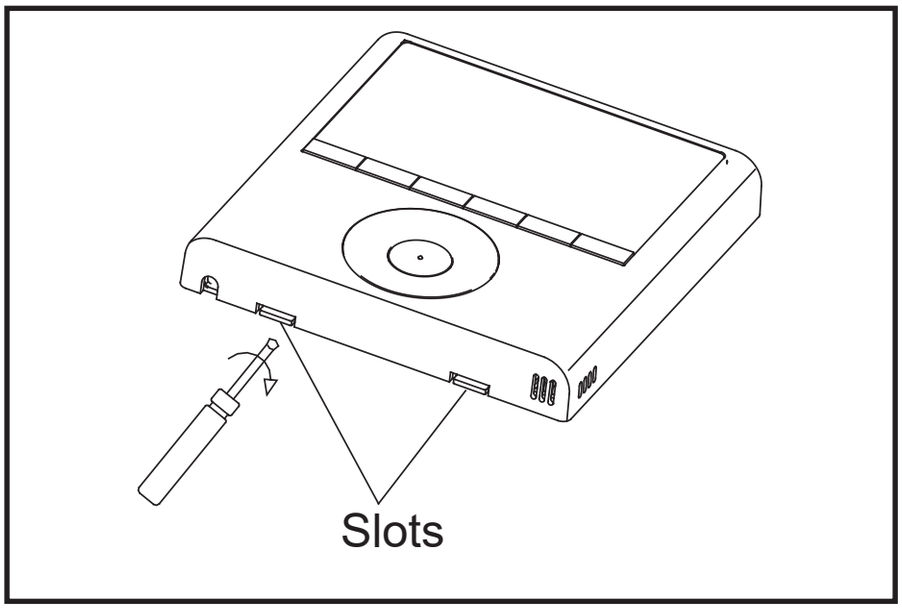

Figure 15. Remove Back Plate

2. Mount the back plate as appropriate for your application.

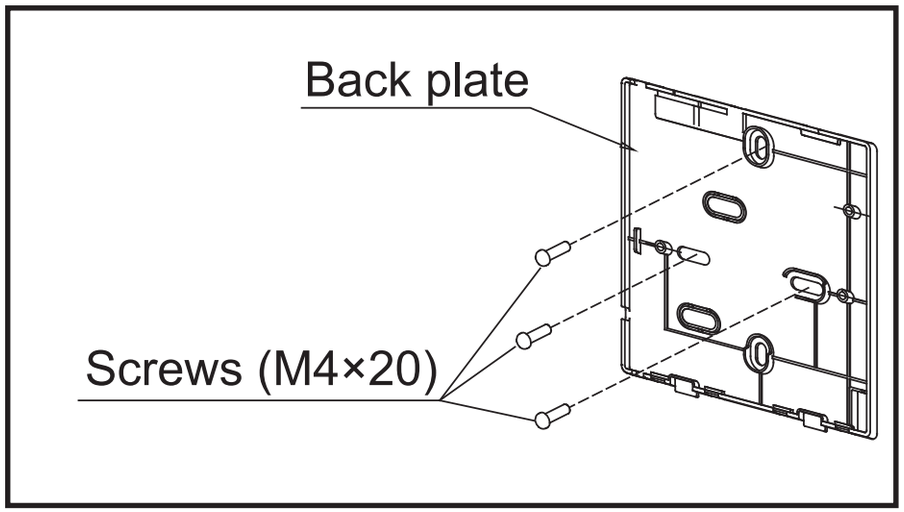

Figure 16. Attach Back Plate to Wall

3. J-box installation - Adjust the length of the two plastic spacers as needed to allow the controller to be mounted flush with the wall.

***NOTE** – Be sure to provide for future maintenance by allowing enough slack in the wiring to allow the controller to be removed from the wall if needed.*

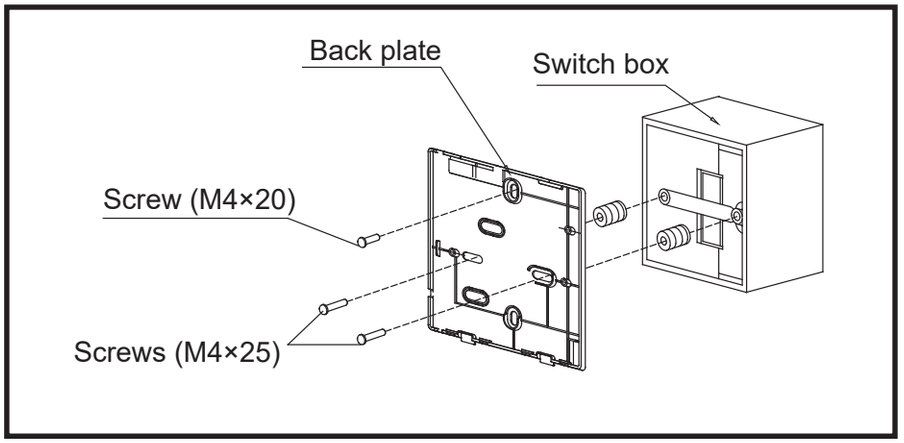

Figure 17. Attach Back Plate to J-box

4. Insert the provided battery into controller, positive side out. The battery stores the day and time in case of power outage. Replace the battery when it's charge is depleted.
5. Reattach the controller to the back plate. Be careful not to pinch or bind the wires.

Display

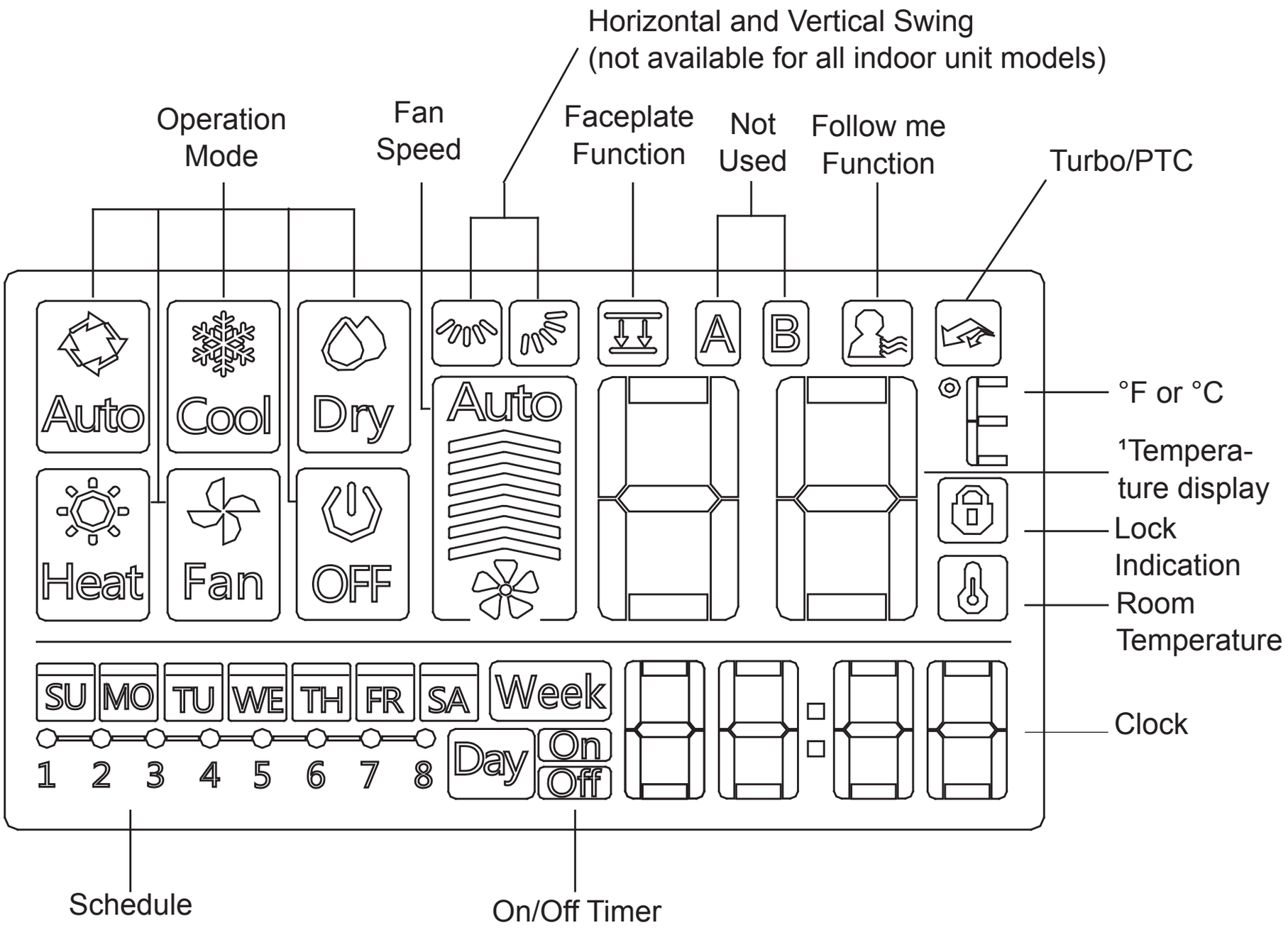

¹ Displays cooling set point, heating set point or room temperature

Description of Buttons

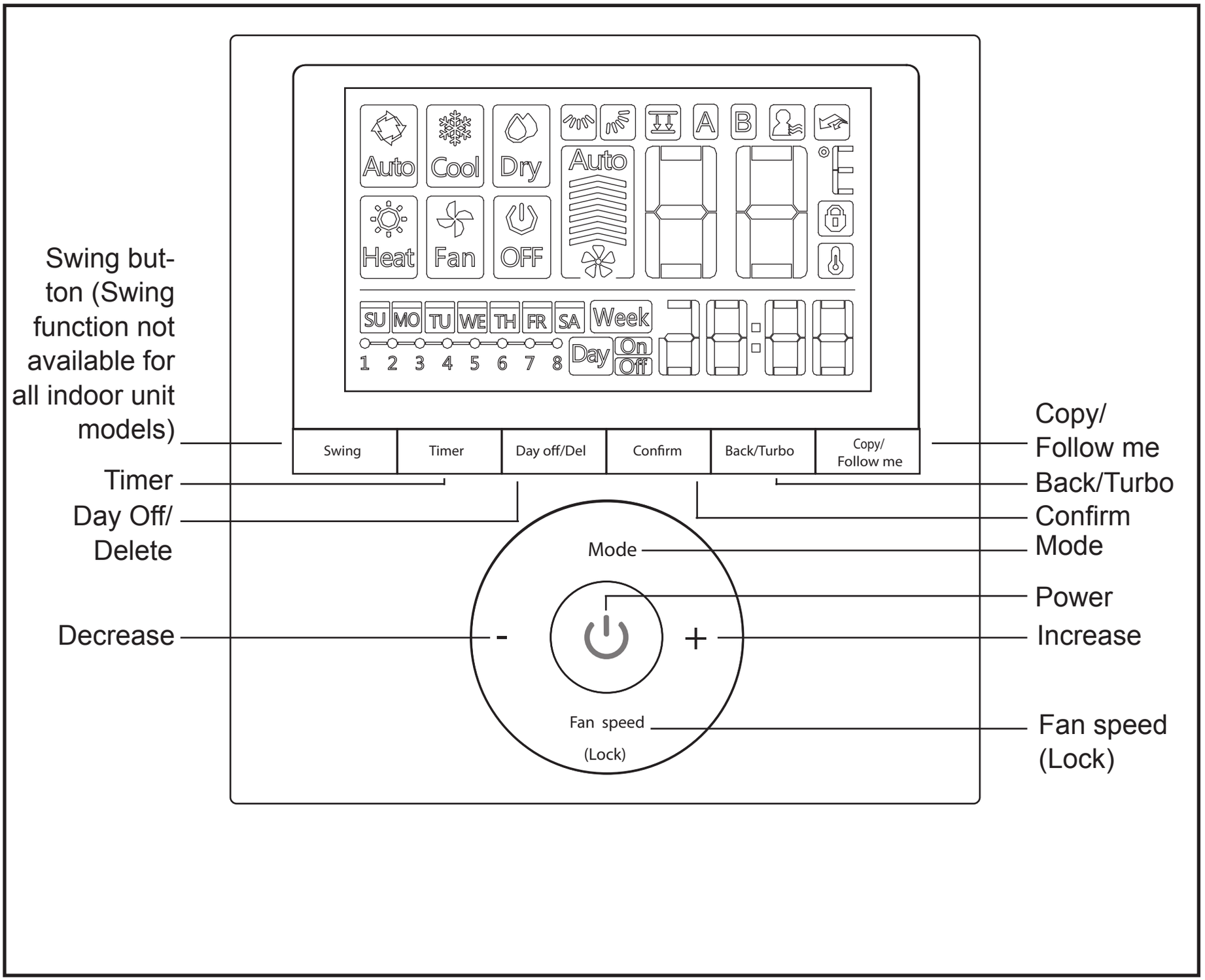

Install the provided CR2032 lithium battery. It is required for retaining settings should power is lost to the controller. If the battery is not included then one will need to be field provided.

Set the Current Day and Time

1. Press and hold the Timer button for 3 seconds.
2. Use the + and - buttons to select the day. The selected day will flash.
3. Press the Timer button to complete the date setting.
4. Use the + and - buttons to set the current time. ***NOTE*** *– the controller uses a 24-hour clock.*
5. Press the Timer button to complete the time setting.

Select Fahrenheit or Celsius for display

Press and hold the Back/Turbo button and the Copy/Follow me button simultaneously for 3 seconds to toggle between displaying degrees Fahrenheit or degrees Celsius.

To Set Room Temperature Sensor Location

Press the Copy/Follow me button to toggle between having the room temperature sensed by the indoor unit or by the controller.

NOTE - *The Follow me indicator will display on the screen when the room temp is being sensed by the controller.*

Key Pad Tone (beep)

1. Press and hold the Swing button and the Timer button simultaneously for 3 seconds to turn off the key pad tone.
2. Press and hold the Swing button and the Timer button simultaneously for 3 seconds again to turn on the key pad tone.

Operation

To Start/Stop Operation

Press the Power button.

To set the operation mode

1. Press the Mode button to set the operation mode.
2. Use the + and - buttons to scroll through the mode selections.
   - **Auto** – System will automatically switch between heating and cooling depending on the temperature sensed.
   - **Cool** – System operates in cooling mode.
   - **Dry –** System removes humidity according to preset conditions (fan speed and set point temperature, not a humidistat sensor). Cannot adjust fan speed.
   - **Heat –** System operates in heating mode.
   - **Fan –** Fan only, no heating or cooling.

To Set (or change) the Set point

Press the + and - buttons to set the setpoint. ***NOTE -*** *the set point range is 62-86°F (17-30°C).*

To Set the Fan Speed

Press the Fan speed (Lock) button to scroll through the fan speeds. Auto → Low → Med → High

To Set Child Lock Function

1. Press and hold the Fan speed (Lock) button for 3 seconds to lock all of the controller buttons.
2. Press and hold the Fan speed (Lock) button again for 3 seconds to unlock all of the buttons.

Turn ON/OFF Turbo Function

Press the Back/Turbo button to activate and deactivate the turbo functionality.

- **Cooling Mode -** Turbo sets the indoor unit fan speed to high for a factory-set period of time.

Set Swing Function

Press the Swing button to adjust louver direction and oscillation.

3. Press the Swing button to adjust the louver position. Each press moves the louvers 6°.
4. Press and hold the Swing button for two seconds to begin continuous louver oscillation. The Swing icon displays on the screen. Swing functionality not available for all indoor unit types.
5. For cassette units only, adjust each of the four louvers independently. Press and hold the Swing button for two seconds. The Swing icon will flash. Press the increase or decrease buttons to select the louver to adjust (the -0 setting makes all louvers move at the same time). After selecting the louver to adjust, press the Swing button to adjust the louver angle. Each press moves the louver 6°.

Timer and Schedules

Use the Timer button to setup Weekly schedules or to setup timed operation for the indoor unit. Timers are used to schedule On/Off operation only. Schedules are used to change operational settings for defined periods of time (events).

Setup Timed Operation Start Time

1. Press the Timer button until Day On is highlighted.
2. Press the Confirm button.
3. Use the + and - buttons to set the time to start operation.
4. Press the Confirm button.

Setup Timed Operation Stop Time

1. Press the Timer button until Day Off is highlighted.
2. Press the Confirm button.
3. Use the + and - buttons to set the time to stop operation.
4. Press the Confirm button.

Setup Timed Operation Start and Stop Time

1. Press the Timer button until Day On/Off is highlighted.
2. Press the Confirm button.
3. Use the + and - buttons to set the time to start operation.
4. Press the Confirm button
5. Use the + and - buttons to set the time to stop operation.
6. Press the Confirm button.

Create Schedules (up to 8 events per day)

1. Press the Timer button until Week is highlighted.
2. Press the Confirm button.
3. Use the + and - buttons to select the day of the week to setup the scheduled events.
4. Press the Confirm button.
5. Setup the first event of the schedule.

Create and Setup Scheduled Events (up to 8 events per day)

1. After selecting the scheduled day.
2. Use the + and - buttons to set the start time of the event. The display will show the event's start time, mode, set point and fan speed.
3. Press the Confirm button to confirm the start time and move to the operation mode selection.
4. Use the + and - buttons to select the operation mode for the event.
5. Press the Confirm button to confirm the operation mode and move to the set point selection.
6. Use the + and - buttons to set the set point for the event.
7. Press the Confirm button to confirm the setpoint and move to the fan speed selection. Not available when operation mode is set to Fan or Off.
8. Use the + and - buttons to select the fan speed for the event.

9. Press the Confirm button to confirm the fan speed and complete the settings for this event. Not available when operation mode is set to Auto, Dry or Off.
10. Follow steps 2 through 9 to setup the next event. Each event ends at the start time of the next event.

NOTE - *Use the Back/Turbo button to return to the previous step during event setup.*

Activate and Deactivate Timed Operation

1. Press the Timer button to activate timed operation.
2. Press the Power button to deactivate timed operation.

Setup Days Off

Setup a day, or multiple days, within the scheduled week for which the indoor unit will not operate. When the day arrives, the unit will be powered off and will not operate until the next day's first event. Once the set day has passed, the Day Off setting is automatically removed.

1. Press the Timer button.
2. Press the Confirm button.
3. Use the + and - buttons to select the day of the week.
4. Press the Day off/Del button.
5. Press the Back/Turbo button.
6. Follow steps 3 and 4 for every day off required.

Copy a Schedule to a New Day

All events for the scheduled day will be copied.

1. Press the Timer button until Week is highlighted.
2. Press the Confirm button.
3. Use the + and - buttons to select the day to copy from.
4. Press the Copy/Follow Me button. The letters "CY" will be displayed on the screen.
5. Use the + and - buttons to select the day to copy to.
6. Press the Copy/Follow Me button to confirm.
7. Press the Back/Turbo button to return to the weekly timer.
8. Follow steps 3 through 7 to copy a schedule for additional days.

Edit a Scheduled Event

1. Press the Timer button until Week is highlighted.
2. Press the Confirm button.
3. Use the + and - buttons to select the day of the week.
4. Press the Confirm button.
5. Use the + and - buttons to select the event to edit. The display will show the event's start time, mode, set point and fan speed.
6. Use the + and - buttons to change the start time of the event.
7. Press the Confirm button to confirm the start time and move to the operation mode selection.
8. Use the + and - buttons to change the operation mode for the event.
9. Press the Confirm button to confirm the operation mode and move to the set point selection.
10. Use the + and - buttons to change the set point for the event.

11. Press the Confirm button to confirm the set-point and move to the fan speed selection. Not available when operation mode is set to Fan or Off.
12. Use the + and - buttons to change the fan speed for the event.
13. Press the Confirm button to confirm the fan speed and complete the changes for this event. Not available when operation mode is set to Auto, Dry or Off.

NOTE - *Use the Back/Turbo button to return to the previous step.*

Delete an Event from a Scheduled Day

This action cannot be undone.

1. Press the Timer button until Week is high-lighted.
2. Press the Confirm button.
3. Use the + and - buttons to select the day of the week.
4. Press the Confirm button.
5. Use the + and - buttons to select the event to delete. The display will show the event's start time, mode, set point and fan speed.
6. Press the Day off/Del button.

Troubleshooting Fault Codes

Programmable Wired Controller	Indoor Unit Error Codes Description
E1	Communication error between indoor unit and outdoor units
E2	Indoor room temperature sensor error (T1)
E3	Indoor coil temperature sensor error (T2)
E4	Indoor coil outlet temperature sensor error (T2B)
E5	Outdoor ambient temperature sensor error (T4)
E5	Outdoor coil temperature sensor error (T3)
E5	Compressor discharge temperature sensor error (T5)
E7	Indoor unit EEPROM error
E8	Indoor fan speed error (DC motor)
EA	Outdoor current overload protection
Ed	Outdoor unit EEPROM error
Ed	Outdoor unit fan speed error (DC fan motor)
EE	High water level alarm
EF	Refrigerant leakage detection (Cooling mode only)
EF	Outdoor IGBT temperature sensor error
F0	Communication error between wired controller and indoor unit
F1	The cassette panel is abnormal