Submittal Data

V36D036S6-5P VRF 360 Cassette

Job Name: _____ Location: _____

Purchaser: _____ Engineer: _____

Submitted to: _____ Reference ☐ Approval ☐ Construction ☐

Unit designation: _____ Schedule #: _____

General Information

- The system shall feature comfort humidity control. Utilizing an integral humidity sensor, the system optimizes the indoor unit coil temperature according to the dew point, maximizing energy savings while still providing space dehumidification and occupant comfort.
- The indoor unit shall have an integral condensate pump with maximum 29” lift from bottom of the unit with check valve and float switch to disable unit in the event of condensate overflow.
- The indoor unit fascia panel shall have a built-in Wi-Fi adapter as standard to allow control and monitoring using the Samsung SmartThings app.

Construction

- Insulated, HIPS chassis and fascia panel certified to UL94 V0.
- Knock-out for outside air capability (booster fan connection).
- All heat exchangers shall be mechanically boded aluminum fin to copper tube.

Refrigerant System

- The system shall utilize low-GWP R-32 refrigerant.
- Refrigerant flow shall be controlled by an electronic expansion valve at the indoor unit.
- The indoor unit shall include an R32 alarm output plug for simple notification of R32 leak detection (VSTAT10P-1 accessory required).

Indoor Fan

- Three fan speed settings and auto settings
- Washable filter as standard
- The indoor unit shall have LED indicator lights and an infrared receiver.
- The indoor unit shall not have air louvers or blades allowing full airflow without restriction.
- Air direction control shall be achieved by creating a low-pressure area near air outlet causing discharge air to change direction angle.
- Fixed or auto-swing air direction shall be possible with local and central controller options (10° ~ 60° angle).
- Independent air distribution control shall be possible with wireless or premium wired controller (three directions, 10° ~ 60° angle).

Controls

- Control wiring shall be 2 X 16 AWG.
- The unit shall be operated via a wireless or wired remote control with DDC-type signal (purchased separately).
- Dual set temperature support when connected to supported controllers.
- No additional interface modules/adapters are required when connecting to Samsung central control options.
- Wired or wireless controllers must be purchased separately.

Open type panel (Round)

Ceiling type panel (Square)

External Heat Control

- External heat control functionality allows for configuration of fan operation during auxiliary heat operation, defrost, and emergency heat (VSTAT10P-1 accessory required).
- External heat control configuration settings include outside ambient external heat lockout, outside ambient compressor lockout, and time delay options (VSTAT10P-1 accessory required).
- Emergency heat functionality allows the system to continue controlling the external heat source even when system errors prevent the heat pump from operating (VSTAT10P-1 accessory required).
- External heat control functionality allows for configuration of fan operation during auxiliary heat operation, defrost, and emergency heat
- Emergency heat functionality allows the system to continue controlling the external heat source even when system errors prevent the heat pump from operating.

Convenience

- Emergency Temperature Output (ETO) function: when indoor unit is in error status or when room temperature exceeds a configurable temperature level, the system outputs a signal to an external source (e.g., backup system, building management system, alert device like status light, warning lamp, or buzzer).

Intertek

AHRI CERTIFIED® www.ahridirectory.org
Unitary Small HP
AHRI Standard 210/240
Certification applies only when the complete system is listed with AHRI.

Lennox maintains a policy of ongoing development. Specifications are subject to change without notice.

Specifications V36D036S6-5P

Model	Indoor Unit Model Number		V36D036S6-5P
Performance	Nominal Capacity	Cooling (Btu/h)	36,000
		Heating (Btu/h)	40,000
Power	Voltage	ø / V / Hz	1 / 208-230 / 60
	Operating Current (max.)	Cooling (A)	0.57
		Heating (A)	0.57
	MCA	A	0.92
	MOP	A	15
Evaporator Fan	Type		BLDC (1) With Turbo Type Fan (1)
	Output	Watts	97
Airflow	Air Volume (L/M/H)	Cooling (CFM)	777 / 883 / 989
		Heating (CFM)	777 / 883 / 989
Refrigerant	Type		R-32
	A2L Leak Detection		Integral
Pipe Connections	Refrigerant	High side (In.)	3/8
		Low side (In.)	5/8
	Condensate		1 1/4 in. OD, 1 in. ID
Dimensions	W X H X D	In.	37 1/4 X 14 3/8 X 37 1/4
	Weight	lbs.	50.70
Sound Pressure Level	Low/Med./High	dB(A)	38 / 40 / 43
Safety	Certifications		UL 60335-2-40
Fascia Panel	Open Type (Round)	L X W X H (in.)	41 3/8 X 3 3/8
		Weight (lbs.)	8.85
	Ceiling Type (Square)	L X W X H (in.)	39 3/8 X 39 3/8 X 2 5/8
		Weight (lbs.)	6.62
Safety	Certifications		UL 60335-2-40

Accessories V36D036S6-5P

Fascia Panel	Open Type (round, black)	☐ V1V36D02CPBW
	Open Type (round, white)	☐ V1V36D02CPWW
	Ceiling Type (square, black)	☐ V1V36D01CPBW
	Ceiling Type (square, white)	☐ V1V36D01CPWW
Wired controller	Advanced	☐ VSTAT04P-1
	Touchscreen	☐ VSTAT02P-1
Thermostat adapter (for connection to standard 24VAC thermostats)		☐ VSTAT09P-1
Wireless controller		☐ VSTAT01P-1
External temperature sensor		☐ VCTRL11P-1
External contact control interface module		☐ VSTAT10P-1
Motion detect sensor (MDS, white, compatible with square panel only)		☐ V1MDS03CS
CN83 Pigtail (for 12VDC VENT output)		☐ JV DB39-01263A CN83 Pigtail

Dimensional Drawing - With Ceiling Type Fascia Panel

V36D036S6-5P

Unit: Inches

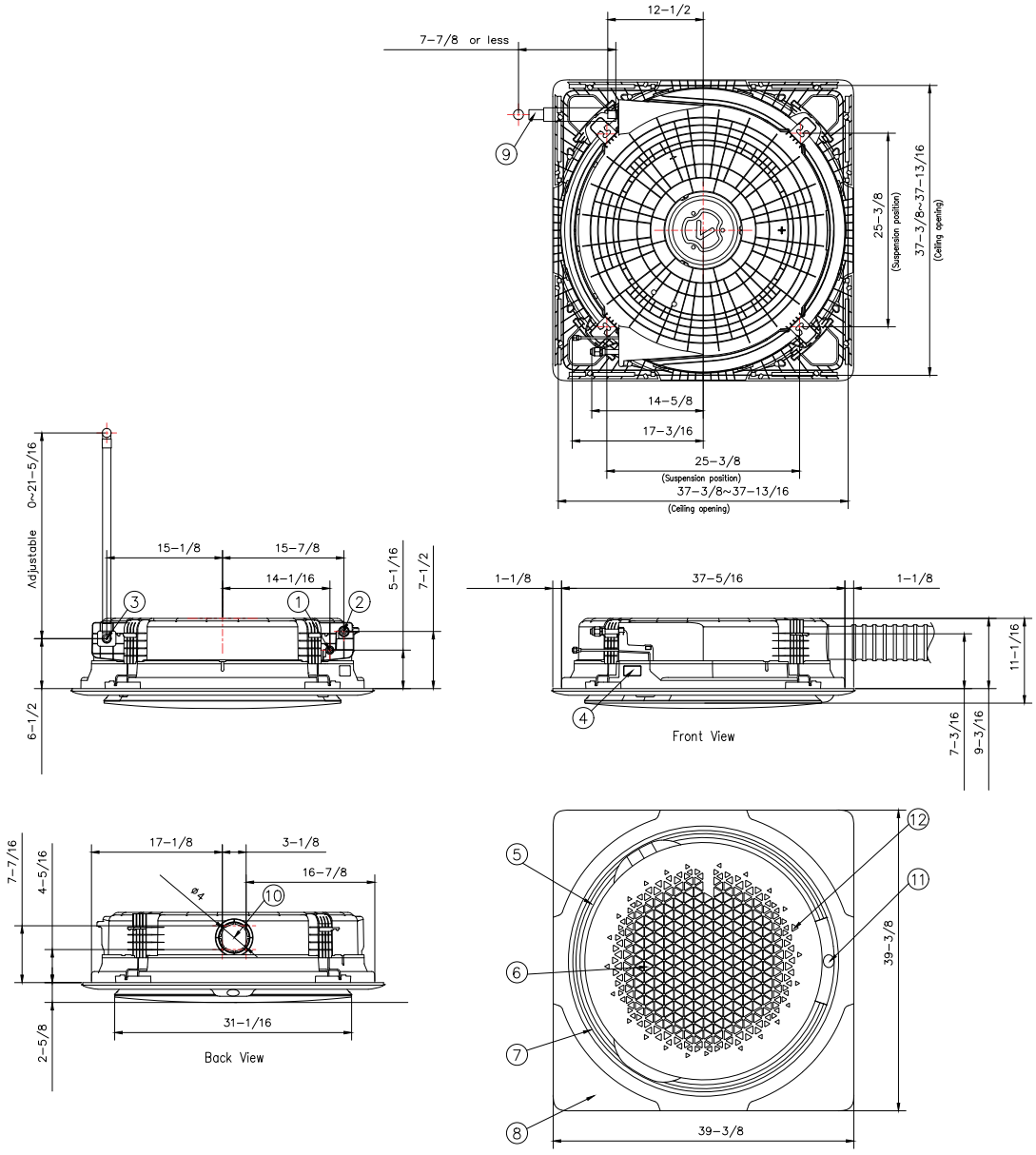

No.	Description
1	Liquid pipe connection (1/4)
2	Gas pipe connection (1/2)
3	Drain pipe connection
4	Opening for power and communication wire conduit
5	Air outlet opening
6	Air inlet grille
7	Suction inlet for booster fan
8	Fascia panel
9	Drain hose
10	Fresh air intake
11	Display
12	Wireless signal receiver

Dimensional Drawing - With Open Type Fascia Panel

V36D036S6-5P

Unit: Inches

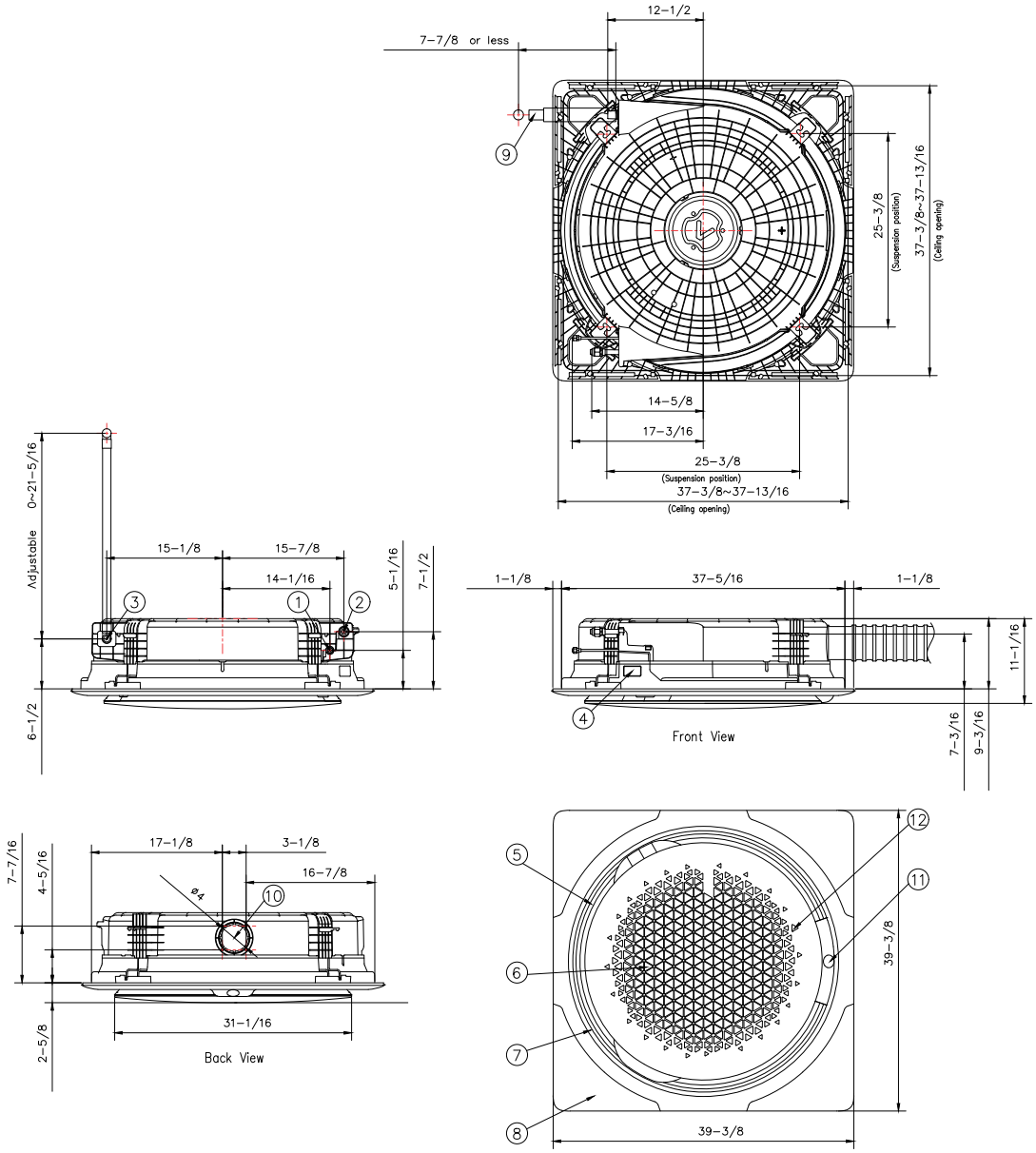

No.	Description
1	Liquid pipe connection (1/4)
2	Gas pipe connection (1/2)
3	Drain pipe connection
4	Opening for power and communication wire conduit
5	Air outlet opening
6	Air inlet grille
7	Suction inlet for booster fan
8	Fascia panel
9	Drain hose
10	Fresh air intake
11	Display
12	Wireless signal receiver