SERVICE MANUAL

KOHLER® COMMAND CH18-750

HORIZONTAL CRANKSHAFT

KOHLER® ENGINES

Contents

Section 1. Safety and General Information 1

Section 2. Special Tools 2

Section 3. Troubleshooting 3

Section 4. Air Cleaner and Air Intake System 4

Section 5. Fuel System and Governor 5

Section 5A. LPG Fuel Systems 5A

Section 5B. Electronic Fuel Injection (EFI) Fuel System 5B

Section 6. Lubrication System 6

Section 7. Retractable Starter 7

Section 8. Electrical System and Components 8

Section 9. Disassembly 9

Section 10. Inspection and Reconditioning 10

Section 11. Reassembly 11

Section 12. Clutch 12

Section 1
Safety and General Information

Safety Precautions

To ensure safe operation please read the following statements and understand their meaning. Also refer to your equipment manufacturer's manual for other important safety information. This manual contains safety precautions which are explained below. Please read carefully.

WARNING
Warning is used to indicate the presence of a hazard that *can* cause *severe* personal injury, death, or substantial property damage if the warning is ignored.

CAUTION
Caution is used to indicate the presence of a hazard that *will* or *can* cause *minor* personal injury or property damage if the caution is ignored.

NOTE
Note is used to notify people of installation, operation, or maintenance information that is important but not hazard-related.

For Your Safety!
These precautions should be followed at all times. Failure to follow these precautions could result in injury to yourself and others.

WARNING

Accidental Starts can cause severe injury or death.

Disconnect and ground spark plug leads before servicing.

WARNING

Rotating Parts can cause severe injury.

Stay away while engine is in operation.

WARNING

Hot Parts can cause severe burns.

Do not touch engine while operating or just after stopping.

Accidental Starts!
Disabling engine. Accidental starting can cause severe injury or death.
Before working on the engine or equipment, disable the engine as follows: 1) Disconnect the spark plug lead(s). 2) Disconnect negative (-) battery cable from battery.

Rotating Parts!
Keep hands, feet, hair, and clothing away from all moving parts to prevent injury. Never operate the engine with covers, shrouds, or guards removed.

Hot Parts!
Engine components can get extremely hot from operation. To prevent severe burns, do not touch these areas while the engine is running - or immediately after it is turned off. Never operate the engine with heat shields or guards removed.

⚠ WARNING

Explosive Fuel can cause fires and severe burns.

Do not fill the fuel tank while the engine is hot or running.

Explosive Fuel!

Gasoline is extremely flammable and its vapors can explode if ignited. Store gasoline only in approved containers, in well ventilated, unoccupied buildings, away from sparks or flames. Do not fill the fuel tank while the engine is hot or running, since spilled fuel could ignite if it comes in contact with hot parts or sparks from ignition. Do not start the engine near spilled fuel. Never use gasoline as a cleaning agent.

⚠ WARNING

Cleaning Solvents can cause severe injury or death.

Use only in well ventilated areas away from ignition sources.

Flammable Solvents!

Carburetor cleaners and solvents are extremely flammable. Keep sparks, flames, and other sources of ignition away from the area. Follow the cleaner manufacturer's warnings and instructions on its proper and safe use. Never use gasoline as a cleaning agent.

⚠ WARNING

Carbon Monoxide can cause severe nausea, fainting or death.

Avoid inhaling exhaust fumes, and never run the engine in a closed building or confined area.

Lethal Exhaust Gases!

Engine exhaust gases contain poisonous carbon monoxide. Carbon monoxide is odorless, colorless, and can cause death if inhaled. Avoid inhaling exhaust fumes, and never run the engine in a closed building or confined area.

⚠ WARNING

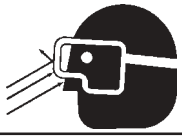

Uncoiling Spring can cause severe injury.

Wear safety goggles or face protection when servicing retractable starter.

Spring Under Tension!

Retractable starters contain a powerful, recoil spring that is under tension. Always wear safety goggles when servicing retractable starters and carefully follow instructions in the "Retractable Starter" Section 7 for relieving spring tension.

⚠ WARNING

Explosive Gas can cause fires and severe acid burns.

Charge battery only in a well ventilated area. Keep sources of ignition away.

Explosive Gas!

Batteries produce explosive hydrogen gas while being charged. To prevent a fire or explosion, charge batteries only in well ventilated areas. Keep sparks, open flames, and other sources of ignition away from the battery at all times. Keep batteries out of the reach of children. Remove all jewelry when servicing batteries.

Before disconnecting the negative (-) ground cable, make sure all switches are OFF. If ON, a spark will occur at the ground cable terminal which could cause an explosion if hydrogen gas or gasoline vapors are present.

⚠ CAUTION

Electrical Shock can cause injury.

Do not touch wires while engine is running.

Electrical Shock!

Never touch electrical wires or components while the engine is running. They can be sources of electrical shock.

Engine Identification Numbers

When ordering parts, or in any communication involving an engine, always give the **Model, Specification and Serial Numbers,** including letter suffixes if there are any.

The engine identification numbers appear on a decal, or decals, affixed to the engine shrouding. See Figure 1-1. An explanation of these numbers is shown in Figure 1-2.

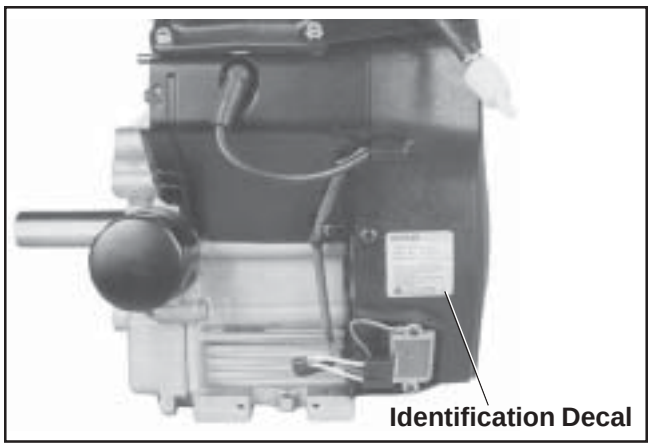

Figure 1-1. Engine Identification Decal Location.

A. Model No.

C H 18 S

Command Engine

Horizontal Crankshaft

Horsepower
17 = 17 HP
18 = 18 HP
20 = 20 HP
22 = 22 HP
23 = 23 HP
25 = 25 HP
26 = 26 HP

or

Numerical Designation
730
740
745
750

Version Code
S = Electric Start

B. Spec. No.

62500 — — — — — **or** — — — — — **CH730-0001**
CH740-0001
CH745-0001
CH750-0001
Complete Spec Number (Incorporating Model No. with Variation No. of Basic Spec.)

Variation of Basic Engine

Engine Model Code

Code	Model	
62	CH18	
64	CH20	
66	CH22	(624 cc)
68	CH25	
76	CH22/23	(674 cc)
78	CH26	

C. Serial No.

3305810334

Year Manufactured Code

Factory Code

Code	Year	Code	Year
21	1991	30	2000
22	1992	31	2001
23	1993	32	2002
24	1994	33	2003
25	1995	34	2004
26	1996	35	2005
27	1997	36	2006
28	1998	37	2007
29	1999		

Figure 1-2. Explanation of Engine Identification Numbers.

Oil Recommendations

Using the proper type and weight of oil in the crankcase is extremely important. So is checking oil daily and changing oil regularly. Failure to use the correct oil, or using dirty oil, causes premature engine wear and failure.

Oil Type

Use high-quality detergent oil of **API (American Petroleum Institute) Service Class SG, SH, SJ or higher.** Select the viscosity based on the air temperature at the time of operation as shown in the following table.

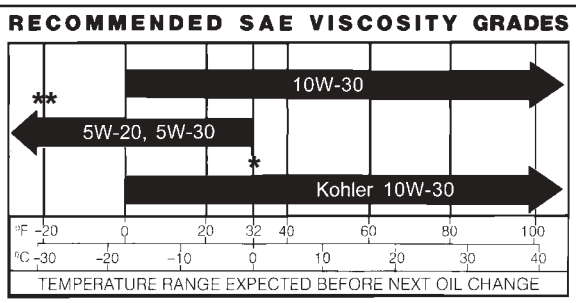

*Use of synthetic oil having 5W-20 or 5W-30 rating is acceptable, up to 4°C (40°F).
**Synthetic oils will provide better starting in extreme cold (below -23°C (-10°F).

NOTE: Using other than service class SG, SH, SJ or higher oil or extending oil change intervals longer than recommended can cause engine damage.

NOTE: Synthetic oils meeting the listed classifications may be used with oil changes performed at the recommended intervals. However, to allow piston rings to properly seat, a new or rebuilt engine should be operated for at least 50 hours using standard petroleum based oil before switching to synthetic oil.

A logo or symbol on oil containers identifies the API service class and SAE viscosity grade. See Figure 1-3.

Figure 1-3. Oil Container Logo.

Refer to Section 6 - "Lubrication System" for detailed procedures on checking the oil, changing the oil and changing the oil filter.

Fuel Recommendations

WARNING: Explosive Fuel!

Gasoline is extremely flammable and its vapors can explode if ignited. Before servicing the fuel system, make sure there are no sparks, open flames or other sources of ignition nearby as these can ignite gasoline vapors. Disconnect and ground the spark plug leads to prevent the possibility of sparks from the ignition system.

General Recommendations

Purchase gasoline in small quantities and store in clean, approved containers. A container with a capacity of 2 gallons or less with a pouring spout is recommended. Such a container is easier to handle and helps eliminate spillage during refueling.

Do not use gasoline left over from the previous season, to minimize gum deposits in your fuel system and to ensure easy starting.

Do not add oil to the gasoline.

Do not overfill the fuel tank. Leave room for the fuel to expand.

Fuel Type

For best results, use only clean, fresh, unleaded gasoline with a pump sticker octane rating of 87 or higher. In countries using the Research method, it should be 90 octane minimum.

Unleaded gasoline is recommended as it leaves less combustion chamber deposits and reduces harmful exhaust emissions. Leaded gasoline is not recommended and ***must not*** be used on EFI engines, or on other models where exhaust emissions are regulated.

Gasoline/Alcohol blends

Gasohol (up to 10% ethyl alcohol, 90% unleaded gasoline by volume) is approved as a fuel for Kohler engines. Other gasoline/alcohol blends are not approved.

Gasoline/Ether blends

Methyl Tertiary Butyl Ether (MTBE) and unleaded gasoline blends (up to a maximum of 15% MTBE by volume) are approved as a fuel for Kohler engines. Other gasoline/ether blends are not approved.

Periodic Maintenance Instructions

WARNING: Accidental Starts!

Disabling engine. Accidental starting can cause severe injury or death. *Before working on the engine or equipment, disable the engine as follows: 1) Disconnect the spark plug lead(s). 2) Disconnect negative (-) battery cable from battery.*

Maintenance Schedule

These required maintenance procedures should be performed at the frequency stated in the table. They should also be included as part of any seasonal tune-up.

Frequency	Maintenance Required	Refer to:
Daily or Before Starting Engine	• Fill fuel tank • Check oil level. • Check air cleaner for dirty[1], loose, or damaged parts. • Check air intake and cooling areas, clean as necessary[1].	Section 5 Section 6 Section 4 Section 4
Every 25 Hours	• Service precleaner element[1].	Section 4
Every 100 Hours	• Replace air cleaner element[1]. • Change oil. (More frequently under severe conditions.) • Remove cooling shrouds and clean cooling areas[1,3]. • Check oil cooler fins, clean as necessary (if equipped).	Section 4 Section 6 Section 4 Section 6
Every 200 Hours	• Check spark plug condition and gap. • Change oil filter. • Change fuel filter (carbureted engines).	Section 8 Section 6 Section 5
Every 250 Hours	• Replace heavy-duty air cleaner element and check inner element[1].	Section 4
Annually or Every 500 Hours	• Have bendix starter drive serviced[2]. • Have solenoid shift starter disassembled and cleaned[2].	Section 8 Section 8
Every 500 Hours	• Have crankshaft splines lubricated[2].	Section 2
Every 1500 Hours	• Replace fuel filter[1] (EFI engines).	Section 5B

[1]Perform these maintenance procedures more frequently under extremely dusty, dirty conditions.
[2]Only requried for Denso starters. Not necessary on Delco starters. Have a Kohler Engine Service Dealer perform this service.
[3]Cleanout Kits 25 755 20-S (black) or 25 755 21-S (gold) allow cooling areas to be cleaned without removing shrouds.

Storage

If the engine will be out of service for two months or more, use the following storage procedure:

1. Clean the exterior surfaces of the engine. On Electronic Fuel Injected (EFI) engines, avoid spraying water at the wiring harness or any of the electrical components.

2. Change the oil and oil filter while the engine is still warm from operation. See “Change Oil and Oil Filter” in Section 6.

3. The fuel system must be completely emptied, or the gasoline must be treated with a stabilizer to prevent deterioration. If you choose to use a stabilizer, follow the manufacturer’s recommendations, and add the correct amount for the capacity of the fuel system.

   Fill the fuel tank with clean, fresh gasoline. Run the engine for 2 to 3 minutes to get stabilized fuel into the rest of the system. Close the fuel shut-off valve when the unit is being stored or transported.

   To empty the system, run the engine until the tank and the system are empty.

4. Remove the spark plugs and add one tablespoon of engine oil into each spark plug hole. Install the spark plugs, but do not connect the plug leads. Crank the engine two or three revolutions.

5. On equipment with an EFI engine, disconnect the battery or use a battery minder to keep the battery charged during storage.

6. Store the engine in a clean, dry place.

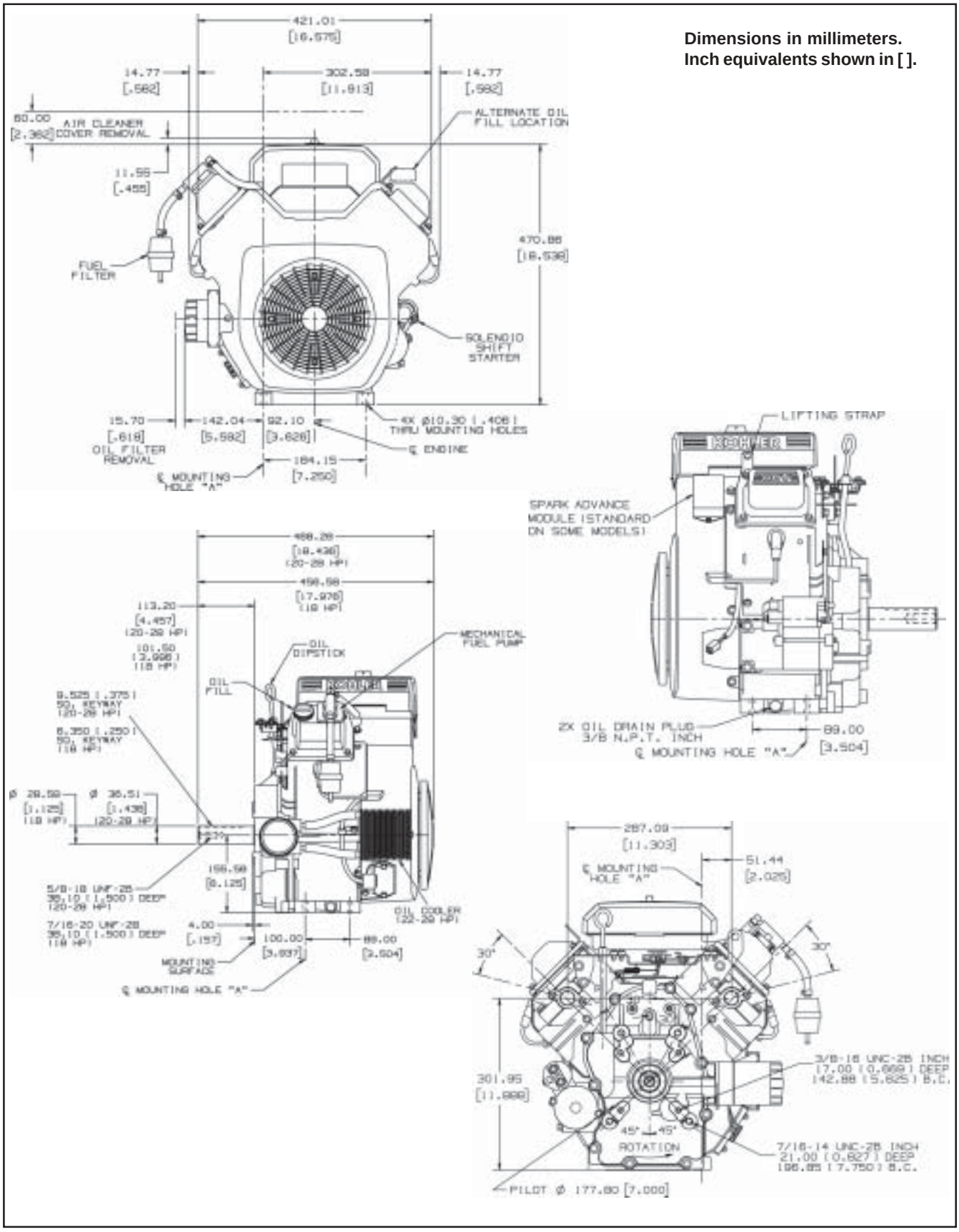

Figure 1-4. Typical Engine Dimensions CH Series with Standard Flat Air Cleaner.

Dimensions in millimeters.
Inch equivalents shown in [ ].

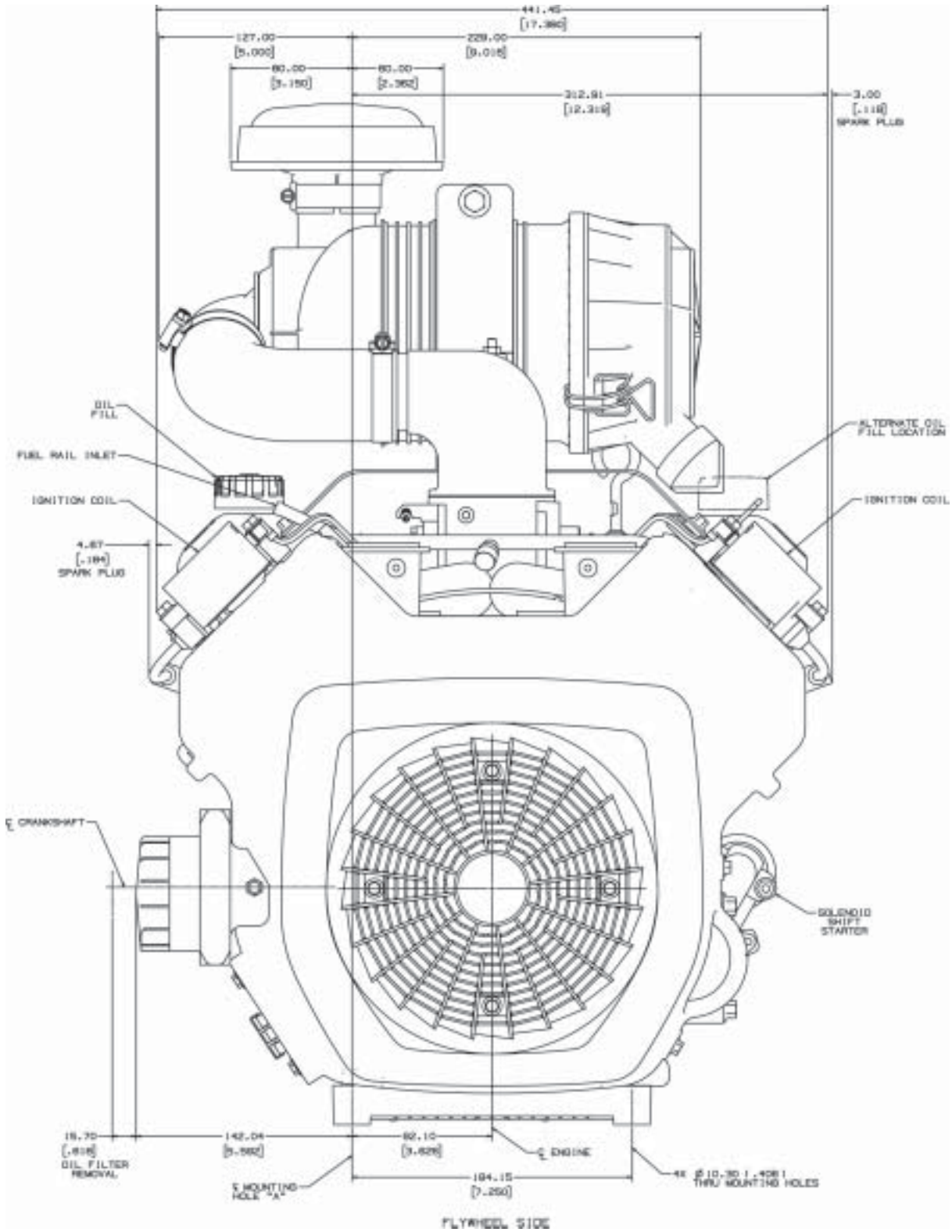

Figure 1-5. Typical Engine Dimensions CH EFI Series with Heavy-Duty Air Cleaner.

General Specifications[1]

Power (@ 3600 RPM, exceeds Society of Automotive Engineers-Small Engine Test Code J1940.)

CH18	13.4 kW (18 HP)
CH20	14.9 kW (20 HP)
CH22	16.4 kW (22 HP)
CH23	17.2 kW (23 HP)
CH25, CH730	18.6 kW (25 HP)
CH26	19.4 kW (26 HP)
CH740	20.1 kW (27 HP)
CH745	20.9 kW (28 HP)
CH750	22.3 kW (30 HP)

Peak Torque

CH18 @ 2200 RPM	43.6 N·m (32.2 ft. lb.)
CH20 @ 2400 RPM	44.3 N·m (32.7 ft. lb.)
CH22 @ 2400 RPM	49.1 N·m (36.2 ft. lb.)
CH23 @ 2400 RPM	54.1 N·m (37.9 ft. lb.)
CH25 @ 2200 RPM	54.0 N·m (39.5 ft. lb.)
CH730 @ 2400 RPM	55.4 N·m (40.9 ft. lb.)
CH26 @ 2800 RPM	54.2 N·m (40.0 ft. lb.)
CH740 @ 2400 RPM	57.3 N·m (42.3 ft. lb.)
CH745 @ 2600 RPM	57.9 N·m (42.7 ft. lb.)
CH750 @ 2400 RPM	64.4 N·m (47.5 ft. lb.)

Bore

CH18, CH20, CH22 (624 cc)	77 mm (3.03 in.)
CH22/23 (674 cc)	80 mm (3.15 in.)
CH25, CH26, CH730-750	83 mm (3.27 in.)

Stroke

CH18-745	67 mm (2.64 in.)
CH750	69 mm (2.7 in.)

Displacement

CH18, CH20, CH22 (624 cc)	624 cc (38 cu. in.)
CH22/23 (674 cc)	674 cc (41 cu. in.)
CH25, CH26, CH730-745	725 cc (44 cu. in.)
CH750	755 cc (46 cu. in.)

Compression Ratio

CH18, CH20, CH22/23	8.5:1
CH25, CH26, CH730-745	9.0:1
CH750	9.4:1

Dry Weight

CH18, CH20, CH22/23	41 kg (90 lb.)
CH25, CH26, CH730-745	43 kg (94 lb.)
CH750	48 kg (105 lb.)

Oil Capacity (w/filter) - approximate,
determined by oil filter and oil cooler used ..... 1.6-1.8 L (1.7-1.9 U.S. qt.)

[1]Values are in Metric units. Values in parentheses are English equivalents. Lubricate threads with engine oil prior to assembly.

General Specifications[1] cont.

Angle of Operation - Maximum (At Full Oil Level) All Directions ..... 25°

Blower Housing and Sheet Metal

M5 Fasteners Torque ..... 6.2 N·m (55 in. lb.) into new holes
4.0 N·m (35 in. lb.) into used holes

M6 Fasteners Torque ..... 10.7 N·m (95 in. lb.) into new holes
7.3 N·m (65 in. lb.) into used holes

Rectifier-Regulator Fastener Torque ..... 1.4 N·m (12.6 in. lb.)

Camshaft

End Play (With Shim) ..... 0.076/0.127 mm (0.0030/0.0050 in.)

Running Clearance ..... 0.025/0.063 mm (0.0010/0.0025 in.)

Bore I.D.
New ..... 20.000/20.025 mm (0.7874/0.7884 in.)
Max. Wear Limit ..... 20.038 mm (0.7889 in.)

Camshaft Bearing Surface O.D.
New ..... 19.962/19.975 mm (0.7859/0.7864 in.)
Max. Wear Limit ..... 19.959 mm (0.7858 in.)

Carburetor and Intake Manifold

Intake Manifold Mounting Fastener Torque
Torque in Two Stages ..... first to 7.4 N·m (66 in. lb.)
finally to 9.9 N·m (88 in. lb.)

Carburetor Mounting Screw Torque M6 ..... 6.2-7.3 N·m (55-65 in. lb.)

Adapter (for Heavy Duty Air Cleaner) Mounting Fastener Torque ..... 7.3 N·m (65 in. lb.)

Connecting Rod

Cap Fastener Torque (torque in increments)
8 mm straight shank ..... 22.7 N·m (200 in. lb.)
8 mm step-down ..... 14.7 N·m (130 in. lb.)
6 mm straight shank ..... 11.3 N·m (100 in. lb.)

Connecting Rod-to-Crankpin Running Clearance
New ..... 0.030/0.055 mm (0.0012/0.0022 in.)
Max. Wear Limit ..... 0.070 mm (0.0028 in.)

Connecting Rod-to-Crankpin Side Clearance ..... 0.26/0.63 mm (0.0102/0.0248 in.)

Connecting Rod-to-Piston Pin Running Clearance ..... 0.015/0.028 mm (0.0006/0.0011 in.)

Piston Pin End I.D.
New ..... 17.015/17.023 mm (0.6699/0.6702 in.)
Max. Wear Limit ..... 17.036 mm (0.6707 in.)

[1]Values are in Metric units. Values in parentheses are English equivalents. Lubricate threads with engine oil prior to assembly.

Crankcase

Governor Cross Shaft Bore I.D.
6 mm Shaft
New ..... 6.025/6.050 mm (0.2372/0.2382 in.)
Max. Wear Limit ..... 6.063 mm (0.2387 in.)
8 mm Shaft
New ..... 8.025/8.075 mm (0.3159/0.3179 in.)
Max. Wear Limit ..... 8.088 mm (0.3184 in.)

Breather Cover Fastener Torque ..... 7.3 N·m (65 in. lb.)

Oil Drain Plug Torque ..... 13.6 N·m (10 ft. lb.)

Closure Plate

Closure Plate Fastener Torque ..... 24.4 N·m (216 in. lb.)

Crankshaft

End Play (Free) ..... 0.070/0.590 mm (0.0028/0.0230 in.)

End Play (With Thrust Bearing Components) ..... 0.070/0.270 mm (0.0028/0.0100 in.)
Except CH25 Engines Below Serial No. 2403500008 ..... 0.050/0.750 mm (0.0020/0.0295 in.)

Crankshaft Bore (In Crankcase)
New ..... 40.965/41.003 mm (1.6128/1.6143 in.)
Max. Wear Limit ..... 41.016 mm (1.6148 in.)

Crankshaft to Sleeve Bearing (Crankcase)
Running Clearance - New ..... 0.03/0.09 mm (0.0012/0.0035 in.)

Crankshaft Bore (In Closure Plate) - New ..... 40.987/40.974 mm (1.6136/1.6131 in.)

Crankshaft Bore (In Closure Plate)-to-Crankshaft
Running Clearance - New ..... 0.039/0.074 mm (0.0015/0.0029 in.)

Flywheel End Main Bearing Journal
O.D. - New ..... 40.913/40.935 mm (1.6107/1.6116 in.)
O.D. - Max. Wear Limit ..... 40.84 mm (1.608 in.)
Max. Taper ..... 0.022 mm (0.0009 in.)
Max. Out-of-Round ..... 0.025 mm (0.0010 in.)

Closure Plate End Main Bearing Journal
O.D. - New ..... 40.913/40.935 mm (1.6107/1.6116 in.)
O.D. - Max. Wear Limit ..... 40.84 mm (1.608 in.)
Max. Taper ..... 0.022 mm (0.0009 in.)
Max. Out-of-Round ..... 0.025 mm (0.0010 in.)

Connecting Rod Journal
O.D. - New ..... 35.955/35.973 mm (1.4156/1.4163 in.)
O.D. - Max. Wear Limit ..... 35.94 mm (1.415 in.)
Max. Taper ..... 0.018 mm (0.0007 in.)
Max. Out-of-Round ..... 0.025 mm (0.0010 in.)

Crankshaft cont.

Crankshaft T.I.R.

PTO End, Crank in Engine	0.279 mm (0.0110 in.)
Entire Crank, in V-Blocks	0.10 mm (0.0039 in.)

Cylinder Bore

Cylinder Bore I.D.

New - CH18, CH20, CH22 (624 cc)	77.000/77.025 mm (3.0315/3.0325 in.)
New - CH22/23 (674 cc)	80.000/80.025 mm (3.1496/3.1506 in.)
New - CH25, CH26, CH730-750	82.988/83.013 mm (3.2672/3.2682 in.)
Max. Wear Limit - CH18, CH20, CH22 (624 cc)	77.063 mm (3.0340 in.)
Max. Wear Limit - CH22/23 (674 cc)	80.065 mm (3.1522 in.)
Max. Wear Limit - CH25, CH26, CH730-750	83.051 mm (3.2697 in.)
Max. Out-of-Round	0.12 mm (0.0047 in.)
Max. Taper	0.05 mm (0.0020 in.)

Cylinder Head

Cylinder Head Fastener Torque

Hex Flange Nut - Torque in Two Stages	first to 16.9 N·m (150 in. lb.) finally to 33.9 N·m (300 in. lb.)
Head Bolt - Torque in Two Stages	first to 22.6 N·m (200 in. lb.) finally to 41.8 N·m (370 in. lb.)

Max. Out-of-Flatness	0.076 mm (0.003 in.)
Rocker Arm Screw Torque	11.3 N·m (100 in. lb.)

Fan/Flywheel

Fan Fastener Torque	9.9 N·m (88 in. lb.)
Flywheel Retaining Screw Torque	66.4 N·m (49 ft. lb.)

Governor

Governor Cross Shaft-to-Crankcase Running Clearance

6 mm Shaft	0.013/0.075 mm (0.0005/0.0030 in.)
8 mm Shaft	0.025/0.126 mm (0.0009/0.0049 in.)

Governor Cross Shaft O.D.

6 mm Shaft	
New	5.975/6.012 mm (0.2352/0.2367 in.)
Max. Wear Limit	5.962 mm (0.2347 in.)
8 mm Shaft	
New	7.949/8.000 mm (0.3129/0.3149 in.)
Max. Wear Limit	7.936 mm (0.3124 in.)

Governor Gear Shaft-to-Governor Gear Running Clearance	0.015/0.140 mm (0.0006/0.0055 in.)

Governor Gear Shaft O.D.

New	5.990/6.000 mm (0.2358/0.2362 in.)
Max. Wear Limit	5.977 mm (0.2353 in.)

Governor Lever Nut Torque	6.8 N·m (60 in. lb.)

Ignition

Spark Plug Type (Champion® or Equivalent)	RC12YC, XC12YC, or Platinum 3071
Spark Plug Gap	0.76 mm (0.030 in.)
Spark Plug Torque	24.4-29.8 N·m (18-22 ft. lb.)
Ignition Module Air Gap	0.28/0.33 mm (0.011/0.013 in.)
Ignition Module Fastener Torque	4.0-6.2 N·m (35-55 in. lb.)
Speed Sensor Air Gap (EFI engines)	1.50 ± 0.25 mm (0.059 ± 0.010 in.)

Muffler

Muffler Retaining Nut Torque	24.4 N·m (216 in. lb.)

Oil Filter

Oil Filter Torque	3/4-1 turn after gasket contact

Oil Cooler

Oil Cooler/Adapter Nipple Torque	27 N·m (20 ft. lb.)

Piston, Piston Rings, and Piston Pin

Piston-to-Piston Pin Running Clearance	0.006/0.017 mm (0.0002/0.0007 in.)
Piston Pin Bore I.D.	
New	17.006/17.012 mm (0.6695/0.6698 in.)
Max. Wear Limit	17.025 mm (0.6703 in.)
Piston Pin O.D.	
New	16.995/17.000 mm (0.6691/0.6693 in.)
Max. Wear Limit	16.994 mm (0.6691 in.)
Top Compression Ring-to-Groove Side Clearance	
CH18, CH20, CH22 (624 cc)	0.040/0.080 mm (0.0016/0.0031 in.)
CH22/23 (674 cc)	0.030/0.076 mm (0.0012/0.0030 in.)
CH25, CH26, CH730-750	0.025/0.048 mm (0.0010/0.0019 in.)
Middle Compression Ring-to-Groove Side Clearance	
CH18, CH20, CH22 (624 cc)	0.040/0.080 mm (0.0016/0.0031 in.)
CH22/23 (674 cc)	0.030/0.076 mm (0.0012/0.0030 in.)
CH25, CH26, CH730-750	0.015/0.037 mm (0.0006/0.0015 in.)
Oil Control Ring-to-Groove Side Clearance	
CH18, CH20, CH22 (624 cc)	0.060/0.202 mm (0.0024/0.0080 in.)
CH22/23 (674 cc)	0.046/0.196 mm (0.0018/0.0077 in.)
CH25, CH26, CH730-750	0.026/0.176 mm (0.0010/0.0070 in.)

Piston, Piston Rings, and Piston Pin cont.

Top and Center Compression Ring End Gap
- New Bore - CH18, CH20, CH22 (624 cc) ..... 0.25/0.45 mm (0.0098/0.0177 in.)
- New Bore - CH22/23 (674 cc) ..... 0.18/0.46 mm (0.0071/0.0181 in.)
- New Bore - CH25, CH26, CH730-745 ..... 0.25/0.56 mm (0.0100/0.0224 in.)
- Used Bore (Max.) - CH18, CH20, CH22 (624 cc) ..... 0.77 mm (0.030 in.)
- Used Bore (Max.) - CH22/23 (674 cc) ..... 0.80 mm (0.0315 in.)
- Used Bore (Max.) - CH25, CH26, CH730-750 ..... 0.94 mm (0.037 in.)

Piston Thrust Face O.D.[2]
- New - CH18, CH20, CH22 (624 cc) ..... 76.967/76.985 mm (3.0302/3.0309 in.)
- New - CH22/23 (674 cc) ..... 79.963/79.979 mm (3.1481/3.1488 in.)
- New - CH25, CH26, CH730-750 ..... 82.986 mm (3.2671 in.)
- Max. Wear Limit - CH18, CH20, CH22 (624 cc) ..... 76.840 mm (3.0252 in.)
- Max. Wear Limit - CH22 (674 cc) ..... 79.831 mm (3.1430 in.)
- Max. Wear Limit - CH25, CH26, CH730-750 ..... 82.841 mm (3.2614 in.)

Piston Thrust Face-to-Cylinder Bore[2] Running Clearance
- New - CH18, CH20, CH22 (624 cc) ..... 0.014/0.057 mm (0.0005/0.0022 in.)
- New - CH22/23 (674 cc) ..... 0.021/0.062 mm (0.0008/0.0024 in.)
- New - CH25, CH26, CH730-750 ..... 0.001/0.045 mm (0.039/0.0018 in.)

Speed Control Bracket

Fastener Torque ..... 10.7 N·m (95 in. lb.) into new holes
7.3 N·m (65 in. lb.) into used holes

Starter Assembly

Thru Bolt Torque
- UTE/Johnson Electric, Eaton (Inertia Drive) ..... 4.5-5.7 N·m (40-50 in. lb.)
- Nippondenso (Solenoid Shift) ..... 4.5-7.5 N·m (40-84 in. lb.)
- Delco-Remy (Solenoid Shift) ..... 5.6-9.0 N·m (49-79 in. lb.)

Mounting Screw Torque (All) ..... 15.3 N·m (135 in. lb.)

Brush Holder Mounting Screw Torque
- Delco-Remy Starter ..... 2.5-3.3 N·m (22-29 in. lb.)

Solenoid (Starter)

Mounting Hardware Torque
- Nippondenso Starter ..... 6.0-9.0 N·m (53-79 in. lb.)
- Delco-Remy Starter ..... 4.0-6.0 N·m (35-53 in. lb.)

Nut, Positive (+) Brush Lead Torque
- Nippondenso Starter ..... 8.0-12.0 N·m (71-106 in. lb.)
- Delco-Remy Starter ..... 8.0-11.0 N·m (71-97 in. lb.)

Stator

Mounting Screw Torque ..... 6.2 N·m (55 in. lb.)

[2]Measure 6 mm (0.236 in.) above the bottom of the piston skirt at right angles to the piston pin.

Valve Cover

Valve Cover Fastener Torque
Gasket Style Cover ..... 3.4 N·m (30 in. lb.)
Black O-Ring Style Cover
w/Shoulder Screws ..... 5.6 N·m (50 in. lb.)
w/Flange Screws and Spacers ..... 9.9 N·m (88 in. lb.)
Yellow or Brown O-Ring Style Cover w/Integral Metal Spacers ..... 6.2 N·m (55 in. lb.)

Valves and Valve Lifters

Hydraulic Valve Lifter to Crankcase Running Clearance ..... 0.0241/0.0501 mm (0.0009/0.0020 in.)

Intake Valve Stem-to-Valve Guide Running Clearance ..... 0.038/0.076 mm (0.0015/0.0030 in.)

Exhaust Valve Stem-to-Valve Guide Running Clearance ..... 0.050/0.088 mm (0.0020/0.0035 in.)

Intake Valve Guide I.D.
New ..... 7.038/7.058 mm (0.2771/0.2779 in.)
Max. Wear Limit ..... 7.134 mm (0.2809 in.)

Exhaust Valve Guide I.D.
New ..... 7.038/7.058 mm (0.2771/0.2779 in.)
Max. Wear Limit ..... 7.159 mm (0.2819 in.)

Valve Guide Reamer Size
Standard ..... 7.048 mm (0.2775 in.)
0.25 mm O.S. ..... 7.298 mm (0.2873 in.)

Intake Valve Minimum Lift ..... 8.07 mm (0.3177 in.)

Exhaust Valve Minimum Lift ..... 8.07 mm (0.3177 in.)

Nominal Valve Seat Angle ..... 45°

General Torque Values

Metric Fastener Torque Recommendations for Standard Applications

Tightening Torque: N·m (in. lb.) + or - 10%

	Property Class					Noncritical Fasteners Into Aluminum
	4.8	5.8	8.8	10.9	12.9	
Size						
M4	1.2 (11)	1.7 (15)	2.9 (26)	4.1 (36)	5.0 (44)	2.0 (18)
M5	2.5 (22)	3.2 (28)	5.8 (51)	8.1 (72)	9.7 (86)	4.0 (35)
M6	4.3 (38)	5.7 (50)	9.9 (88)	14.0 (124)	16.5 (146)	6.8 (60)
M8	10.5 (93)	13.6 (120)	24.4 (216)	33.9 (300)	40.7 (360)	17.0 (150)

Tightening Torque: N·m (ft. lb.) + or - 10%

	Property Class					Noncritical Fasteners Into Aluminum
	4.8	5.8	8.8	10.9	12.9	
M10	21.7 (16)	27.1 (20)	47.5 (35)	66.4 (49)	81.4 (60)	33.9 (25)
M12	36.6 (27)	47.5 (35)	82.7 (61)	116.6 (86)	139.7 (103)	61.0 (45)
M14	58.3 (43)	76.4 (55)	131.5 (97)	184.4 (136)	219.7 (162)	94.9 (70)

English Fastener Torque Recommendations for Standard Applications

Tightening Torque: N·m (in. lb.) + or - 20%				
Bolts, Screws, Nuts and Fasteners Assembled Into Cast Iron or Steel				Grade 2 or 5 Fasteners Into Aluminum
	Grade 2	Grade 5	Grade 8	
Size				
8-32	2.3 (20)	2.8 (25)	---------	2.3 (20)
10-24	3.6 (32)	4.5 (40)	---------	3.6 (32)
10-32	3.6 (32)	4.5 (40)	---------	---------
1/4-20	7.9 (70)	13.0 (115)	18.7 (165)	7.9 (70)
1/4-28	9.6 (85)	15.8 (140)	22.6 (200)	---------
5/16-18	17.0 (150)	28.3 (250)	39.6 (350)	17.0 (150)
5/16-24	18.7 (165)	30.5 (270)	---------	---------
3/8-16	29.4 (260)	---------	---------	---------
3/8-24	33.9 (300)	---------	---------	---------
Tightening Torque: N·m (ft. lb.) + or - 20%				
Size				
5/16-24	---------	----------	40.7 (30)	---------
3/8-16	---------	47.5 (35)	67.8 (50)	---------
3/8-24	---------	54.2 (40)	81.4 (60)	---------
7/16-14	47.5 (35)	74.6 (55)	108.5 (80)	---------
7/16-20	61.0 (45)	101.7 (75)	142.4 (105)	---------
1/2-13	67.8 (50)	108.5 (80)	155.9 (115)	---------
1/2-20	94.9 (70)	142.4 (105)	223.7 (165)	---------
9/16-12	101.7 (75)	169.5 (125)	237.3 (175)	---------
9/16-18	135.6 (100)	223.7 (165)	311.9 (230)	---------
5/8-11	149.2 (110)	244.1 (180)	352.6 (260)	---------
5/8-18	189.8 (140)	311.9 (230)	447.5 (330)	---------
3/4-10	199.3 (150)	332.2 (245)	474.6 (350)	---------
3/4-16	271.2 (200)	440.7 (325)	637.3 (470)	---------

Torque Conversions

N·m = in. lb. x 0.113
N·m = ft. lb. x 1.356
in. lb. = N·m x 8.85
ft. lb. = N·m x 0.737

Section 2
Tools & Aids

2

Certain quality tools are designed to help you perform specific disassembly, repair, and reassembly procedures. By using tools designed for the job, you can properly service engines easier, faster, and safer! In addition, you'll increase your service capabilities and customer satisfaction by decreasing engine downtime.

Here is the list of tools and their source.

Separate Tool Suppliers:

Kohler Tools
Contact your source
of supply.

SE Tools
415 Howard St.
Lapeer, MI 48446
Phone 810-664-2981
Toll Free 800-664-2981
Fax 810-664-8181

Design Technology Inc.
768 Burr Oak Drive
Westmont, IL 60559
Phone 630-920-1300

Tools	
Description	**Source/Part No.**
Balance Gear Timing Tool (K & M Series) To hold balance gears in timed position when assembling engine.	Kohler 25 455 06-S (Formerly Y-357)
Camshaft Endplay Plate For checking camshaft endplay.	SE Tools KLR-82405
Cylinder Leakdown Tester For checking combustion retention and if cylinder, piston, rings, or valves are worn.	Kohler 25 761 05-S
Electronic Fuel Injection (EFI) Diagnostic Software Use with Laptop or Desktop PC.	Kohler 25 761 23-S
EFI Service Kit For troubleshooting and setting up an EFI engine.	Kohler 24 761 01-S
Individual Components Available Pressure Tester Noid Light 90° Adapter Oetiker Clamp Pliers Code Plug, Red Wire Code Plug, Blue Wire	Design Technology Inc. DTI-019 DTI-021 DTI-023 DTI-025 DTI-027 DTI-029
Flywheel Holding Tool (CS Series)	SE Tools KLR-82407
Flywheel Puller To remove flywheel from engine.	SE Tools KLR-82408

Tools (cont.)	
Description	**Source/Part No.**
Flywheel Strap Wrench To hold flywheel during removal.	SE Tools KLR-82409
Hydraulic Valve Lifter Tool To remove and install hydraulic lifters.	Kohler 25 761 38-S
Ignition System Tester For testing output on all systems, except CD. For testing output on capacitive discharge (CD) ignition system.	Kohler 25 455 01-S Kohler 24 455 02-S
Offset Wrench (K & M Series) To remove and reinstall cylinder barrel retaining nuts.	SE Tools KLR-82410
Oil Pressure Test Kit To test and verify oil pressure.	Kohler 25 761 06-S
Rectifier-Regulator Tester (120 volt current) **Rectifier-Regulator Tester (240 volt current)** Used to test rectifier-regulators.	Kohler 25 761 20-S Kohler 25 761 41-S
Individual Components Available CS-PRO Regulator Test Harness Special Regulator Test Harness with Diode	Design Technology Inc. DTI-031 DTI-033
Spark Advance Module (SAM) Tester To test the SAM (ASAM and DSAM) on engines with SMART-SPARK™.	Kohler 25 761 40-S
Starter Brush Holding Tool (Solenoid Shift) To hold brushes during servicing.	SE Tools KLR-82416
Starter Retaining Ring Tool (Inertia Drive) To remove and reinstall drive retaining rings (excluding FASCO starters).	Kohler 25 761 18-S
Starter Servicing Kit (All Starters) To remove and reinstall drive retaining rings and brushes.	SE Tools KLR-82411
Individual Component Available Starter Brush Holding Tool (Solenoid Shift)	SE Tools KLR-82416
Tachometer (Digital Inductive) For checking operating speed (RPM) of an engine.	Design Technology Inc. DTI-110
Vacuum/Pressure Tester Alternative to a water manometer.	Kohler 25 761 22-S
Valve Guide Reamer (K & M Series) For sizing valve guides after installation.	SE Tools KLR-82413
Valve Guide Service Kit (Courage, Aegis, Command, OHC) For servicing worn value guides.	SE Tools KLR-82415

Aids	
Description	**Source/Part No.**
Camshaft Lubricant (Valspar ZZ613)	Kohler 25 357 14-S
Dielectric Grease (GE/Novaguard G661)	Kohler 25 357 11-S
Dielectric Grease (Fel-Pro)	Lubri-Sel
Electric Starter Drive Lubricant (Inertia Drive)	Kohler 52 357 01-S
Electric Starter Drive Lubricant (Solenoid Shift)	Kohler 52 357 02-S
RTV Silicone Sealant Loctite® 5900 Heavy Body in 4 oz aerosol dispenser. Only oxime-based, oil resistant RTV sealants, such as those listed, are approved for use. Loctite® Nos. 5900 or 5910 are recommended for best sealing characteristics. Loctite® 5910 Loctite® Ultra Black 598 Loctite® Ultra Blue 587 Loctite® Ultra Copper	Kohler 25 597 07-S
Spline Drive Lubricant	Kohler 25 357 12-S

Special Tools You Can Make

Flywheel Holding Tool

A flywheel holding tool can be made out of an old junk flywheel ring gear as shown in Figure 2-1, and used in place of a strap wrench.

1. Using an abrasive cut-off wheel, cut out a six tooth segment of the ring gear as shown.

2. Grind off any burrs or sharp edges.

3. Invert the segment and place it between the ignition bosses on the crankcase so that the tool teeth engage the flywheel ring gear teeth. The bosses will lock the tool and flywheel in position for loosening, tightening or removing with a puller.

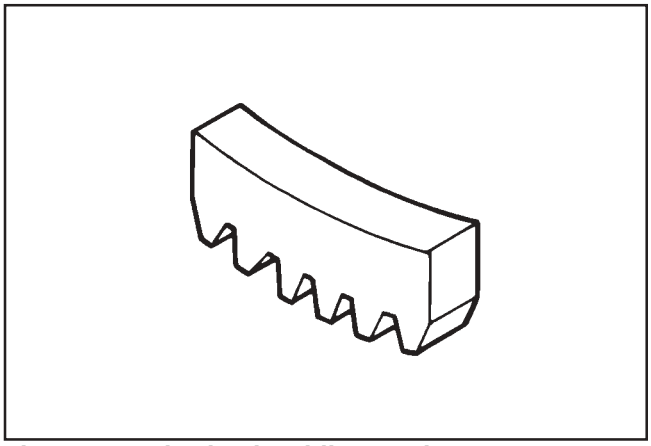

Figure 2-1. Flywheel Holding Tool.

Rocker Arm/Crankshaft Tool

A spanner wrench to lift the rocker arms or turn the crankshaft may be made out of an old junk connecting rod.

1. Find a used connecting rod from a 10 HP or larger engine. Remove and discard the rod cap.

2. Remove the studs of a Posi-Lock rod or grind off the aligning steps of a Command rod, so the joint surface is flat.

3. Find a 1 in. long capscrew with the correct thread size to match the threads in the connecting rod.

4. Use a flat washer with the correct I.D. to slip on the capscrew and approximately 1″ O.D. (Kohler Part No. 12 468 05-S). Assemble the capscrew and washer to the joint surface of the rod, as shown in **Figure 2-2**.

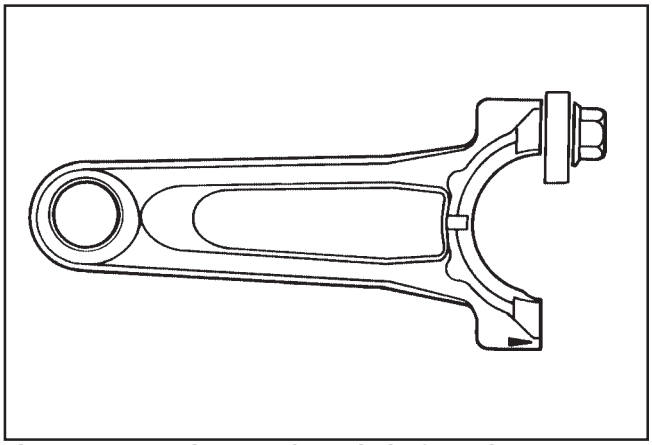

Figure 2-2. Rocker Arm/Crankshaft Tool.

Section 3
Troubleshooting

Troubleshooting Guide

When troubles occur, be sure to check the simple causes which, at first, may seem too obvious to be considered. For example, a starting problem could be caused by an empty fuel tank.

Some general common causes of engine troubles are listed below. Use these to locate the causing factors. Refer to the specific section(s) within this service manual for more detailed information.

Engine Cranks But Will Not Start

1. Empty fuel tank.
2. Fuel shut-off valve closed.
3. Poor fuel, dirt or water in the fuel system.
4. Clogged fuel line.
5. Spark plug lead(s) disconnected.
6. Key switch or kill switch in "off" position.
7. Faulty spark plugs.
8. Faulty ignition module(s).
9. SMART-SPARK™ malfunction (applicable models).
10. Carburetor solenoid malfunction.
11. Diode in wiring harness failed in open circuit mode.
12. Vacuum fuel pump malfunction, or oil in vacuum hose.
13. Vacuum hose to fuel pump leaking/cracked.
14. Battery connected backwards.
15. Safety interlock system engaged.

Engine Starts But Does Not Keep Running

1. Restricted fuel tank cap vent.
2. Poor fuel, dirt or water in the fuel system.
3. Faulty or misadjusted choke or throttle controls.
4. Loose wires or connections that short the kill terminal of ignition module to ground.
5. Faulty cylinder head gasket.
6. Faulty carburetor.
7. Vacuum fuel pump malfunction, or oil in vacuum hose.
8. Leaking/cracked vacuum hose to fuel pump.
9. Intake system leak.
10. Diode in wiring harness failed in open circuit mode.

Engine Starts Hard

1. PTO drive is engaged.
2. Dirt or water in the fuel system.
3. Clogged fuel line.
4. Loose or faulty wires or connections.
5. Faulty or misadjusted choke or throttle controls.
6. Faulty spark plugs.
7. Low compression.
8. Weak spark.
9. Fuel pump malfunction causing lack of fuel.
10. Engine overheated-cooling/air circulation restricted.
11. Quality of fuel.
12. Flywheel key sheared.
13. Intake system leak.

Engine Will Not Crank

1. PTO drive is engaged.
2. Battery is discharged.
3. Safety interlock switch is engaged.
4. Loose or faulty wires or connections.
5. Faulty key switch or ignition switch.
6. Faulty electric starter or solenoid.
7. Seized internal engine components.

Engine Runs But Misses

1. Dirt or water in the fuel system.
2. Spark plug lead disconnected.
3. Poor quality of fuel.
4. Faulty spark plug(s).
5. Loose wires or connections that intermittently ground the ignition kill circuit.
6. Engine overheated.
7. Faulty ignition module or incorrect air gap.
8. Carburetor adjusted incorrectly.
9. SMART-SPARK™ malfunction (applicable models).

Engine Will Not Idle

1. Dirt or water in the fuel system.
2. Stale fuel and/or gum in carburetor.
3. Faulty spark plugs.
4. Fuel supply inadequate.
5. Idle speed adjusting screw improperly set.
6. Idle fuel adjusting needle improperly set (some models).
7. Low compression.
8. Restricted fuel tank cap vent.
9. Engine overheated-cooling system/air circulation problem.

Engine Overheats

1. Air intake/grass screen, cooling fins, or cooling shrouds clogged.
2. Excessive engine load.
3. Low crankcase oil level.
4. High crankcase oil level.
5. Faulty carburetor.
6. Lean fuel mixture.
7. SMART-SPARK™ malfunction (applicable models).

Engine Knocks

1. Excessive engine load.
2. Low crankcase oil level.
3. Old or improper fuel.
4. Internal wear or damage.
5. Hydraulic lifter malfunction.
6. Quality of fuel.
7. Incorrect grade of oil.

Engine Loses Power

1. Low crankcase oil level.
2. High crankcase oil level.
3. Dirty air cleaner element.
4. Dirt or water in the fuel system.
5. Excessive engine load.
6. Engine overheated.
7. Faulty spark plugs.
8. Low compression.
9. Exhaust restriction.
10. SMART-SPARK™ malfunction (applicable models).
11. Low battery.
12. Incorrect governor setting.

Engine Uses Excessive Amount of Oil

1. Incorrect oil viscosity/type.
2. Clogged or improperly assembled breather.
3. Breather reed broken.
4. Worn or broken piston rings.
5. Worn cylinder bore.
6. Worn valve stems/valve guides.
7. Crankcase overfilled.
8. Blown head gasket/overheated.

Oil Leaks from Oil Seals, Gaskets

1. Crankcase breather is clogged or inoperative.
2. Breather reed broken.
3. Loose or improperly torqued fasteners.
4. Piston blowby or leaky valves.
5. Restricted exhaust.

External Engine Inspection

Before cleaning or disassembling the engine, make a thorough inspection of its external appearance and condition. This inspection can give clues to what might be found inside the engine (and the cause) when it is disassembled.

- Check for buildup of dirt and debris on the crankcase, cooling fins, grass screen, and other external surfaces. Dirt or debris on these areas are causes of higher operating temperatures and overheating.

- Check for obvious fuel and oil leaks, and damaged components. Excessive oil leakage can indicate a clogged or improperly-assembled breather, worn/damaged seals and gaskets, or loose or improperly-torqued fasteners.

- Check the air cleaner cover and base for damage or indications of improper fit and seal.

- Check the air cleaner element. Look for holes, tears, cracked or damaged sealing surfaces, or other damage that could allow unfiltered air into the engine. Also note if the element is dirty or clogged. These could indicate that the engine has been under serviced.

- Check the carburetor throat for dirt. Dirt in the throat is further indication that the air cleaner is not functioning properly.

- Check the oil level. Note if the oil level is within the operating range on the dipstick, or if it is low or overfilled.

- Check the condition of the oil. Drain the oil into a container - the oil should flow freely. Check for metal chips and other foreign particles.

  Sludge is a natural by-product of combustion; a small accumulation is normal. Excessive sludge formation could indicate overrich carburetion, weak ignition, overextended oil change interval or wrong weight or type of oil was used, to name a few.

  NOTE: It is good practice to drain oil at a location away from the workbench. Be sure to allow ample time for complete drainage.

Cleaning the Engine

After inspecting the external condition of the engine, clean the engine thoroughly before disassembling it. Also clean individual components as the engine is disassembled. Only clean parts can be accurately inspected and gauged for wear or damage. There are many commercially available cleaners that will quickly remove grease, oil, and grime from engine parts. When such a cleaner is used, *follow the manufacturer's instructions and safety precautions carefully*.

Make sure all traces of the cleaner are removed before the engine is reassembled and placed into operation. Even small amounts of these cleaners can quickly break down the lubricating properties of engine oil.

Basic Engine Tests

Crankcase Vacuum Test

A partial vacuum should be present in the crankcase when the engine is operating. Pressure in the crankcase (normally caused by a clogged or improperly assembled breather) can cause oil to be forced out at oil seals, gaskets, or other available spots.

Crankcase vacuum is best measured with either a water manometer or a vacuum gauge (see Section 2). Complete instructions are provided in the kits.

To test the crankcase vacuum with the manometer:

1. Insert the stopper/hose into the oil fill hole. Leave the other tube of manometer open to atmosphere. Make sure the shut off clamp is closed.

2. Start the engine and run at no-load high speed (3200 to 3750 RPM).

3. Open the clamp and note the water level in the tube.

   The level in the engine side should be a minimum of **10.2 cm (4 in.)** above the level in the open side.

   If the level in the engine side is less than specified (low/no vacuum), or the level in the engine side is lower than the level in the open side (pressure), check for the conditions in the table on page 3.4.

4. Close the shut off clamp **before** stopping the engine.

To test the crankcase vacuum with the Vacuum/ Pressure Gauge Kit (see Section 2):

1. Remove the dipstick or oil fill plug/cap.

2. Install the adapter into the oil fill/dipstick tube opening, upside down over the end of a small diameter dipstick tube, or directly into engine if a tube is not used.

3. Push the barbed fitting on the gauge solidly into the hole in the adapter.

4. Start the engine and bring it up to operating speed (3200-3600 RPM).

5. Check the reading on the gauge. If the reading is to the **left** of "0" on the gauge, vacuum or negative pressure is indicated. If the reading is to the **right** of "0" on the gauge, positive pressure is present.

   Crankcase vacuum should be 4-10 (inches of water) If the reading is below specification, or if pressure is present, check the following table for possible causes and remedies.

No Crankcase Vacuum/Pressure in Crankcase

Possible Cause	Solution
1. Crankcase breather clogged or inoperative.	1. Disassemble breather, clean parts thoroughly, check sealing surfaces for flatness, reassemble, and recheck pressure.
2. Seals and/or gaskets leaking. Loose or improperly torqued fasteners.	2. Replace all worn or damaged seals and gaskets. Make sure all fasteners are tightened securely. Use appropriate torque values and sequences when necessary.
3. Piston blowby or leaky valves (confirm by inspecting components).	3. Recondition piston, rings, cylinder bore, valves, and valve guides.
4. Restricted exhaust.	4. Repair/replace restricted muffler/exhaust system.

Compression Test

Some of these engines are equipped with an automatic compression release (ACR) mechanism. Because of the ACR mechanism, it is difficult to obtain an accurate compression reading. As an alternative, perform a cylinder leakdown test.

Cylinder Leakdown Test

A cylinder leakdown test can be a valuable alternative to a compression test. By pressurizing the combustion chamber from an external air source you can determine if the valves or rings are leaking, and how badly.

Cylinder Leakdown Tester (see Section 2) is a relatively simple, inexpensive leakdown tester for small engines. The tester includes a quick disconnect for attaching the adapter hose, and a holding tool.

Leakdown Test Instructions

1. Run engine for 3-5 minutes to warm it up.

2. Remove spark plug(s) and air filter from engine.

3. Rotate the crankshaft until the piston (of cylinder being tested) is at top dead center of the compression stroke. Hold the engine in this position while testing. The holding tool supplied with the tester can be used if the PTO end of the crankshaft is accessible. Lock the holding tool onto the crankshaft. Install a 3/8" breaker bar into the hole/slot of the holding tool, so it is perpendicular to both the holding tool and crankshaft PTO.

   If the flywheel end is more accessible, use a breaker bar and socket on the flywheel nut/screw to hold it in position. An assistant may be needed to hold the breaker bar during testing. If the engine is mounted in a piece of equipment, it may be possible to hold it by clamping or wedging a driven component. Just be certain that the engine cannot rotate off of TDC in either direction.

4. Install the adapter into the spark plug hole, but do not attach it to the tester at this time.

5. Connect an air source of at least 50 psi to the tester.

6. Turn the regulator knob in the increase (clockwise) direction until the gauge needle is in the yellow “set” area at the low end of the scale.

7. Connect the tester quick-disconnect to the adapter hose while firmly holding the engine at TDC. Note the gauge reading and listen for escaping air at the carburetor intake, exhaust outlet, and crankcase breather.

8. Check your test results against the following table:

Leakdown Test Results

Air escaping from crankcase breather	Defective rings or worn cylinder.
Air escaping from exhaust system	Defective exhaust valve/improper seating.
Air escaping from carburetor	Defective intake valve/improper seating.
Gauge reading in “low” (green) zone	Piston rings and cylinder in good condition.
Gauge reading in “moderate” (yellow) zone	Engine is still usable, but there is some wear present. Customer should start planning for overhaul or replacement.
Gauge reading in “high” (red) zone	Rings and/or cylinder have considerable wear. Engine should be reconditioned or replaced.

Section 4
Air Cleaner and Air Intake System

Air Cleaners

General

Most engines are equipped with a replaceable, high-density paper air cleaner element, surrounded by an oiled foam precleaner, and housed under a flat outer cover. This is typically referred to as the standard air cleaner assembly. See Figures 4-1 and 4-4. Some engines utilize a heavy-duty style air cleaner as shown in Figure 4-12.

Figure 4-1. Standard Air Cleaner.

Standard Air Cleaner

Service

Check the air cleaner **daily or before starting the engine**. Check for and correct any buildup of dirt and debris, along with loose or damaged components.

NOTE: Operating the engine with loose or damaged air cleaner components could allow unfiltered air into the engine, causing premature wear and failure.

Figure 4-2. Removing Latch Style Cover.

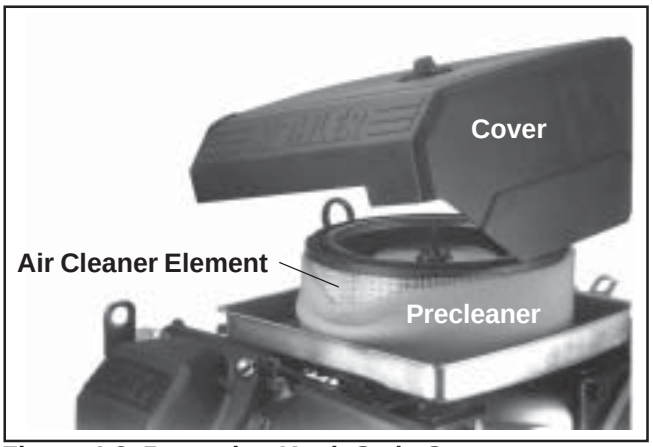

Figure 4-3. Removing Knob Style Cover.

Precleaner Service

If so equipped, wash and reoil the precleaner every **25 hours** of operation (more often under extremely dusty or dirty conditions).

To service the precleaner, perform the following steps:

1. Unhook the latches or loosen the retaining knob, and remove the cover.

2. Remove the foam precleaner from the paper air cleaner element.

3. Wash the precleaner in warm water with detergent. Rinse the precleaner thoroughly until all traces of detergent are eliminated. Squeeze out excess water (do not wring). Allow the precleaner to air dry.

4. Saturate the precleaner with new engine oil. Squeeze out all excess oil.

5. Reinstall the precleaner over the paper air cleaner element.

6. Reinstall the air cleaner cover. Secure the cover with the two latches or the retaining knob.

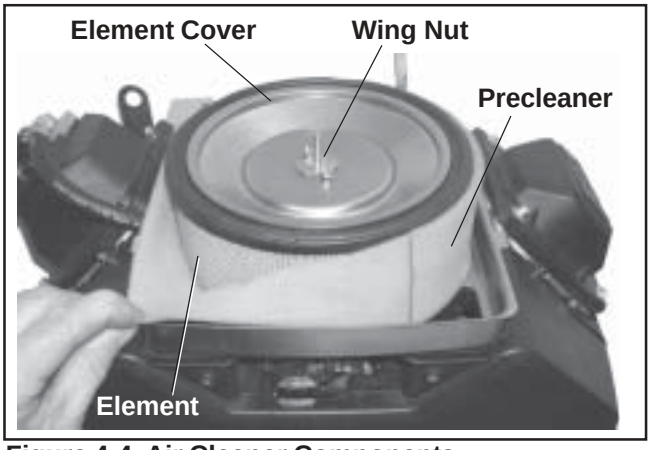

Figure 4-4. Air Cleaner Components.

Figure 4-5. Removing Element Cover Wing Nut.

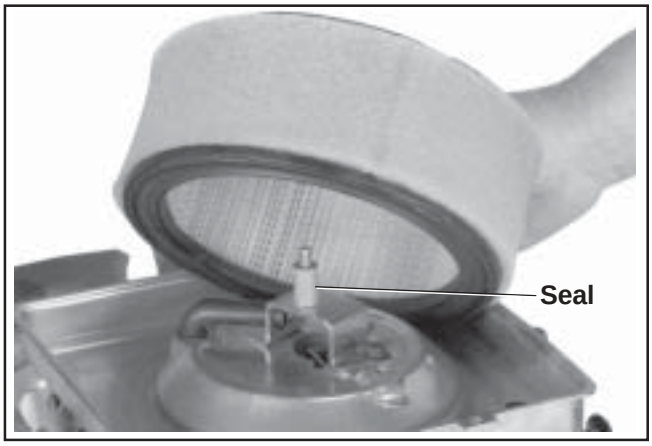

Figure 4-6. Removing Elements.

Figure 4-7. Removing Rubber Seal from Bracket.

Paper Element Service (Standard Type)
Every **100 hours** of operation (more often under extremely dusty or dirty conditions), replace the paper element. Follow these steps:

1. Unhook the latches or loosen the retaining knob, and remove the cover.

2. Remove the wing nut, element cover, and paper element with precleaner (if so equipped).

3. Remove the precleaner (if so equipped) from the paper element. Service the precleaner as described in "Precleaner Service".

4. **Do not wash the paper element or use pressurized air**, as this will damage the element. Replace a dirty, bent, or damaged element with a genuine Kohler element. Handle new elements carefully; do not use if the sealing surfaces are bent or damaged.

5. Check the seal for any damage or deterioration. Replace as necessary. See Figure 4-7.

6. Reinstall the seal, paper element, precleaner, element cover, and wing nut.

7. Reinstall the air cleaner cover and secure with the latches or the retaining knob.

   NOTE: Make sure the correct depth air cleaner element and rubber seal are used for the engine spec involved. Some engines use a deeper or extra capacity air cleaner and a longer rubber seal.

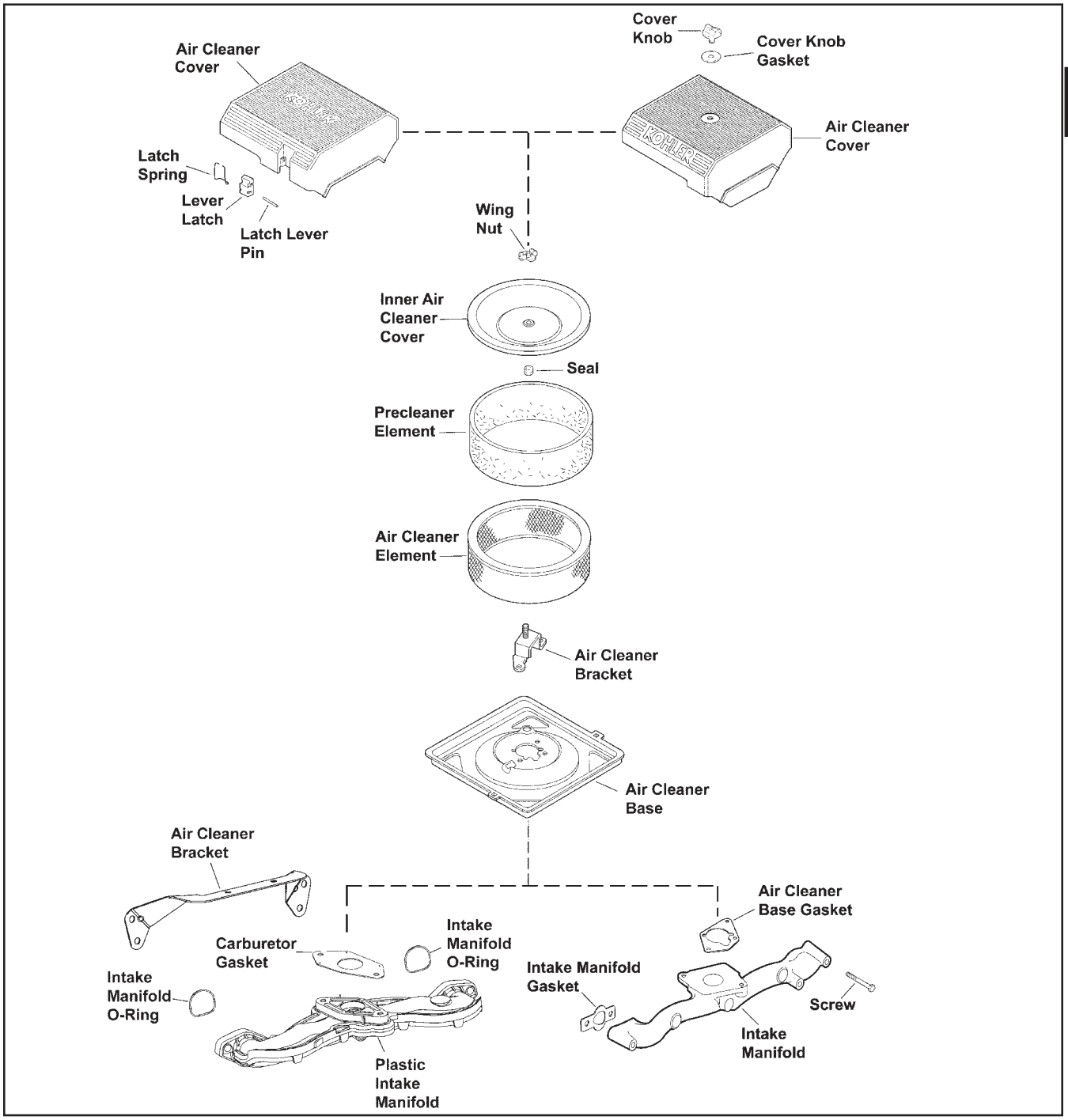

Figure 4-8. Exploded View of Standard Air Intake System Components.

Figure 4-9. Bracket Retaining Screw.

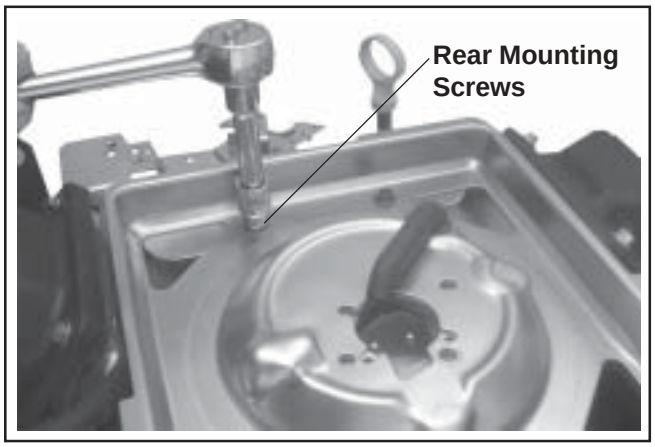

Figure 4-10. Rear Mounting Screws (Used with Plastic Intake Manifold).

Figure 4-11. Breather Tube.

Air Cleaner Components

Whenever the air cleaner cover is removed, or the paper element or precleaner are serviced, check the following:

Air Cleaner Element Cover and Seal - Make sure element cover is not bent or damaged. Make sure the wing nut and seal are in place to ensure the element is sealed against leakage.

Air Cleaner Base - Make sure the base is secured tightly to the carburetor and not cracked or damaged.

Breather Tube - Make sure the tube is attached to both the air cleaner base and the breather cover.

NOTE: Damaged, worn or loose air cleaner components can allow unfiltered air into the engine causing premature wear and failure. Tighten or replace all loose or damaged components.

Complete Disassembly and Reassembly - Standard Type

If the base plate on the standard type has to be removed, proceed as follows:

1. Remove air cleaner components as described earlier.

2. Remove the hex flange screws securing the bracket and base. See Figures 4-9 and 4-10. Remove the bracket.

3. Pinch the sealing collar on the breather hose and push it down through the hole in the air cleaner base. Carefully feed the upper section of the breather tube down through the base. See Figure 4-11.

4. Remove the base and gasket.

5. Reverse the procedure to reinstall new or serviced components. Torque screws to **9.9 N·m (88 in. lb.)**.

Heavy-Duty Air Cleaner

General

The heavy-duty air cleaner consists of a cylindrical housing, typically mounted to a bracket off the upper valve cover screws, and connected with a formed rubber hose to an adapter on the carburetor or throttle body/intake manifold (EFI units). The air cleaner housing contains a paper element and inner element, designed for longer service intervals. The system is CARB/EPA certified and the components should not be altered or modified in any way.

Figure 4-12. Heavy-Duty Air Cleaner.

To Service

Every **250 hours** of operation (more often under extremely dusty or dirty conditions), replace the paper element and check the inner element. Follow these steps.

1. Unhook the two retaining clips and remove the end cap from the air cleaner housing.

2. Pull the air cleaner element out of the housing. See Figure 4-13.

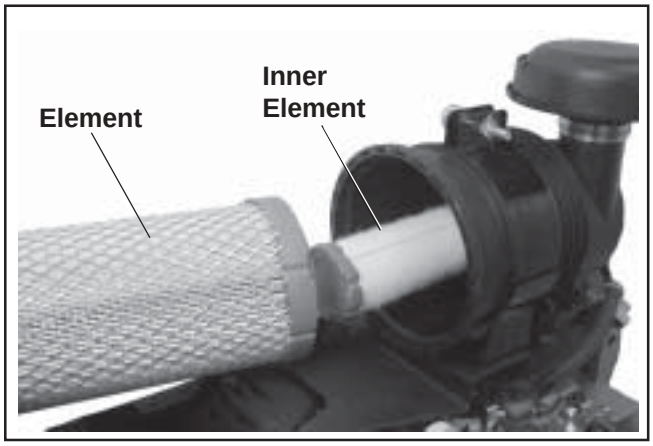

Figure 4-13. Removing Elements.

3. After the element is removed, check the condition of the inner element. It should be replaced whenever it appears dirty, typically every other time the main element is replaced. Clean the area around the base of the inner element before removing it, so dirt does not get into the engine.

4. **Do not** wash the paper element and inner element or use compressed air, this will damage the elements. Replace dirty, bent or damaged elements with new genuine Kohler elements as required. Handle the new elements carefully; do not use if the sealing surfaces are bent or damaged.

5. Check all parts for wear, cracks, or damage. Replace any damaged components.

6. Install the new inner element, followed by the outer element. Slide each fully into place in the air cleaner housing.

7. Reinstall the end cap so the dust ejector valve is down, and secure with the two retaining clips. See Figure 4-12.

Removal

1. Remove the upper valve cover screws on each side, securing the main bracket, and loosen the hose clamp on the adapter inlet, or remove the adapter mounting screws.

2. Lift the entire air cleaner assembly off the engine. Disassemble or service as required.

Installation

1. Install the main mounting bracket with the center section up and the cutout around the carburetor, aligning the mounting holes with the four upper valve cover holes.

2. Install and torque the four valve cover mounting screws to specified torque value.

3. Reconnect the hose to the adapter and tighten the clamp, or install a new adapter gasket (if the adapter was separated from the carburetor), and torque the mounting fasteners to **7.3 N·m (65 in. lb.)**.

   NOTE: Adapter configurations may vary depending on engine and application involved. Two adapters are shown in Figure 4-14.

Figure 4-14. Adapters for Heavy-Duty Air Cleaners.

Air Intake/Cooling System

To ensure proper cooling, make sure the grass screen, cooling fan fins, and external surfaces of the engine are kept clean **at all times**.

Every **100 hours** of operation (more often under extremely dusty or dirty conditions), remove the blower housing and other cooling shrouds. *Clean the cooling fins and external surfaces as necessary. Make sure the cooling shrouds are reinstalled.

*Cleanout kits, Kohler Part No. **25 755 20-S** (black) or **25 755 21-S** (gold), are recommended to aid inspection and cleanout of the cooling fins. See Figure 4-15.

NOTE: Operating the engine with a blocked grass screen, dirty or plugged cooling fins, and/or cooling shrouds removed, will cause engine damage due to overheating.

Figure 4-15. Cleanout Kit Installed on Blower Housing.

Section 5
Fuel System and Governor

Description

The Command horizontal twins use three different types of fuel systems; carbureted, electronic fuel injection (EFI), or gaseous. Gaseous fuel systems can be either liquefied petroleum gas (LPG or LP) or natural gas (NG). Some dual-fuel engines have a combination system, which allows the operator to select either gasoline or LP.

This section covers the standard carbureted fuel systems. The gaseous systems are covered in subsection 5A and the EFI systems are covered in subsection 5B. The governor systems used are covered at the end of this section.

WARNING: Explosive Fuel!

Gasoline is extremely flammable and its vapors can explode if ignited. Store gasoline only in approved containers, in well ventilated, unoccupied buildings, away from sparks or flames. Do not fill the fuel tank while the engine is hot or running, since spilled fuel could ignite if it comes in contact with hot parts or sparks from ignition. Do not start the engine near spilled fuel. Never use gasoline as a cleaning agent.

Fuel System Components

The typical carbureted fuel system and related components include the following:

- Fuel Tank
- Fuel Lines
- In-line Fuel Filter
- Fuel Pump
- Carburetor

Operation

The fuel from the tank is moved through the in-line filter and fuel lines by the fuel pump. On engines not equipped with a fuel pump, the fuel tank outlet is located above the carburetor inlet allowing gravity to feed fuel to the carburetor.

Fuel then enters the carburetor float bowl and is drawn into the carburetor body. There, the fuel is mixed with air. This fuel-air mixture is then burned in the engine combustion chamber.

Fuel Recommendations

General Recommendations

Purchase gasoline in small quantities and store in clean, approved containers. A container with a capacity of 2 gallons or less with a pouring spout is recommended. Such a container is easier to handle and helps eliminate spillage during refueling.

- Do not use gasoline left over from the previous season, to minimize gum deposits in your fuel system and to ensure easy starting.
- Do not add oil to the gasoline.
- Do not overfill the fuel tank. Leave room for the fuel to expand.

Fuel Type

For best results, use only clean, fresh, unleaded gasoline with a pump sticker octane rating of 87 or higher. In countries using the Research fuel rating method, it should be 90 octane minimum.

Unleaded gasoline is recommended as it leaves less combustion chamber deposits and reduces harmful exhaust emissions. Leaded gasoline is not recommended and ***must not*** be used on EFI engines, or on other models where exhaust emissions are regulated.

Gasoline/Alcohol blends

Gasohol (up to 10% ethyl alcohol, 90% unleaded gasoline by volume) is approved as a fuel for Kohler engines. Other gasoline/alcohol blends are not approved.

Gasoline/Ether blends

Methyl Tertiary Butyl Ether (MTBE) and unleaded gasoline blends (up to a maximum of 15% MTBE by volume) are approved as a fuel for Kohler engines. Other gasoline/ether blends are not approved.

Fuel Filter

Most engines are equipped with an in-line fuel filter. Periodically inspect the filter and replace with a genuine Kohler filter **every 200 operating hours**.

Fuel Line

In compliance with CARB Tier III Emission Regulations, carbureted engines with a "**Family**" identification number beginning with "6" or greater (See Figure 5-1), must use Low Permeation SAE 30 R7 rated fuel line; certified to meet CARB requirements. Standard fuel line may not be used. Order replacement hose by part number through a Kohler Engine Service Dealer.

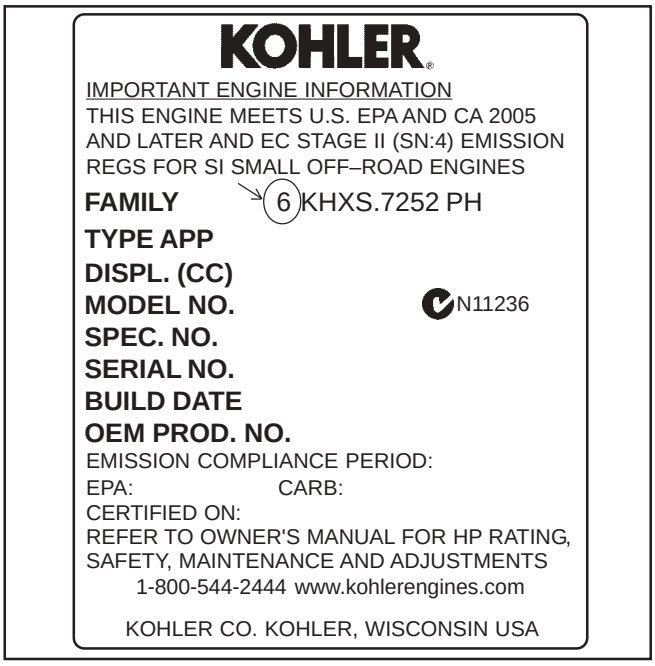

Figure 5-1. "Family" Number Location.

Fuel System Tests

When the engine starts hard, or turns over but will not start, it is possible that the problem is in the fuel system. To find out if the fuel system is causing the problem, perform the following tests.

Troubleshooting – Fuel System Related Causes

Test	Conclusion
1. Check the following: a. Make sure the fuel tank contains clean, fresh, proper fuel. b. Make sure the vent in fuel tank is open. c. Make sure the fuel valve is open. d. Make sure vacuum and fuel lines to fuel pump are secured and in good condition.	
2. Check for fuel in the combustion chamber. a. Disconnect and ground spark plug leads. b. Close the choke on the carburetor. c. Crank the engine several times. d. Remove the spark plug and check for fuel at the tip.	2. If there **is** fuel at the tip of the spark plug, fuel is reaching the combustion chamber. If there is **no** fuel at the tip of the spark plug, check for fuel flow from the fuel tank (Test 3).
3. Check for fuel flow from the tank to the fuel pump. a. Remove the fuel line from the inlet fitting of fuel pump. b. Hold the line below the bottom of the tank. Open the shut-off valve (if so equipped) and observe flow.	3. If fuel **does** flow from the line, check for faulty fuel pump (Test 4). If fuel **does not** flow from the line, check the fuel tank vent, fuel pickup screen, in-line filter, shut-off valve, and fuel line. Correct any observed problem and reconnect the line.
4. Check the operation of fuel pump. a. Remove the fuel line from the inlet fitting of carburetor. b. Crank the engine several times and observe flow.	4. If fuel **does** flow from the line, check for faulty carburetor. (Refer to the "Carburetor" portions of this section.) If fuel **does not** flow from the line, check for a clogged fuel line. If the fuel line is unobstructed, check for overfilled crankcase and/or oil in pulse line. If none of the checks reveal the cause of the problem, replace the pump.

Fuel Pump

General

These engines are equipped with either a pulse or mechanical fuel pump. See Figures 5-2 and 5-3. The pumping action is created by either the oscillation of positive and negative pressures within the crankcase through a hose, or by direct lever/pump actuation off rocker arm movement. The pumping action causes the diaphragm on the inside of the pump to pull fuel in on its downward stroke and to push it into the carburetor on its upward stroke. Internal check valves prevent fuel from going backward through the pump.

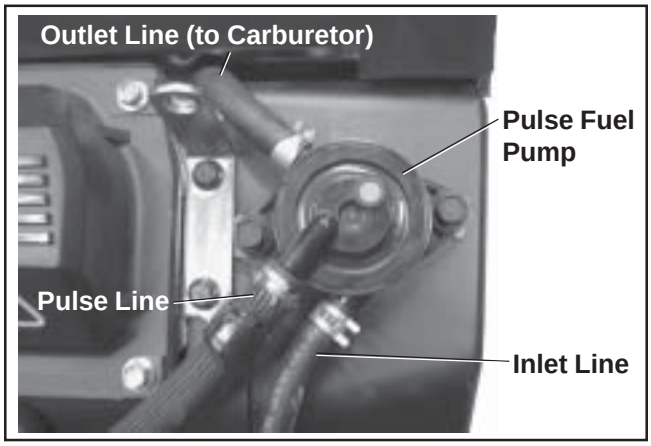

Figure 5-2. Pulse Style Fuel Pump.

Performance

Minimum fuel delivery rate must be 7.5 L/hr. (2 gal./hr.) with a pressure at 0.3 psi and a fuel lift of 18 in. from carburetor inlet. A 1.3 L/hr. (0.34 gal./hr.) fuel rate must be maintained at 5 Hz.

Fuel Pump - Replacement

Replacing the Pulse Fuel Pump

Replacement pumps are available through your source of supply. To replace the pulse pump follow these steps:

1. Disconnect the fuel lines from the inlet and outlet fittings.

2. Remove the hex flange screws securing the fuel pump.

3. Remove the pulse line that connects the pump to the crankcase or valve cover.

   NOTE: On most models, the pulse line is connected to a fitting on the crankcase, while on early models, it is connected to the valve cover.

4. Install the new fuel pump using the hex flange screws. Torque the hex flange screws to **2.3 N·m (20 in. lb.)**.

   NOTE: Make sure the orientation of the new pump is consistent with the removed pump. Internal damage may occur if installed incorrectly.

5. Connect the pulse line to the pulse fitting.

6. Connect the fuel lines to the inlet and outlet fittings.

Replacing the Mechanical Pump

The mechanical pump is an integral part of the valve cover assembly and not serviced separately. See Figure 5-3.

1. Disconnect the fuel lines from the inlet and outlet fittings.

2. Follow the procedure for replacing the valve cover (Sections 9 and 11).

3. Reconnect the fuel lines to the inlet and outlet fittings.

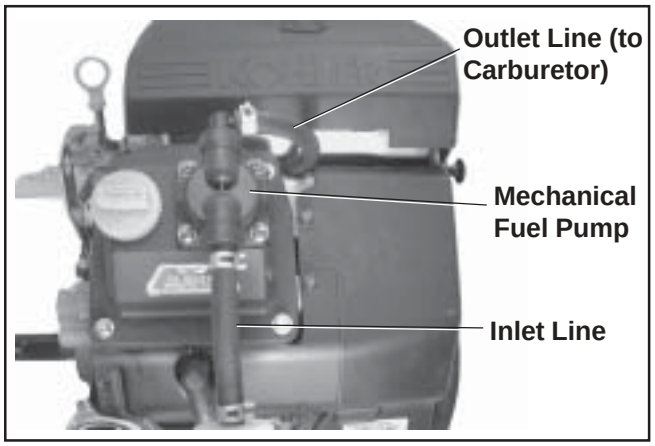

Figure 5-3. Mechanical Fuel Pump.

Carburetor

General

Engines in this series are equipped with Keihin fixed main jet carburetors. CH18-740 engines use a one-barrel carburetor. Most applications use a fuel shut-off solenoid installed in place of the fuel bowl retaining screw, and also contain an accelerator pump. All carburetors feature a self-relieving choke like or similar to the one shown in the exploded view on page 5.10. CH750 engines use a Keihin BK two-barrel carburetor on a matching intake manifold. This carburetor with related servicing and adjustments is covered beginning on page 5.11.

WARNING: Explosive Fuel

Gasoline is extremely flammable and its vapors can explode if ignited. Store gasoline only in approved containers, in well ventilated, unoccupied buildings, away from sparks or flames. Do not fill the fuel tank while the engine is hot or running, since spilled fuel could ignite if it comes in contact with hot parts or sparks from ignition. Do not start the engine near spilled fuel. Never use gasoline as a cleaning agent.

Troubleshooting - Carburetor Related Causes

Condition	Possible Cause/Probable Remedy
1. Engine starts hard, runs roughly or stalls at idle speed.	1. Low idle fuel mixture (some models)/speed improperly adjusted. Adjust the low idle speed tab, then adjust the low idle fuel needle.
2. Engine runs rich (indicated by black, sooty exhaust smoke, misfiring, loss of speed and power, governor hunting, or excessive throttle opening).	2a. Clogged air cleaner. Clean or replace. b. Choke partially closed during operation. Check the choke lever/ linkage to ensure choke is operating properly. c. Low idle fuel mixture is improperly adjusted. Adjust low idle fuel needle (some models). d. Float level is set too high. Separate carburetor air horn from carburetor body, adjust float to specification. e. Dirt under the fuel inlet needle. Remove needle; clean needle and seat and blow with compressed air. f. Bowl vent or air bleeds plugged. Remove low idle fuel adjusting needle. Clean vent, ports, and air bleeds. Blow out all passages with compressed air. g. Leaky, cracked or damaged float. Submerge float to check for leaks.
3. Engine runs lean (indicated by misfiring, loss of speed and power, governor hunting or excessive throttle opening).	3a. Low idle fuel mixture is improperly adjusted. Adjust low idle fuel needle (some models). b. Float level is set too low. Separate carburetor air horn from carburetor body, adjust float specification. c. Idle holes plugged; dirt in fuel delivery channels. Remove low idle fuel adjusting needle. Clean main fuel jet and all passages; blow out with compressed air.
4. Fuel leaks from carburetor.	4a. Float level set too high. See Remedy 2d. b. Dirt under fuel inlet needle. See Remedy 2e. c. Bowl vents plugged. Blow out with compressed air. d. Carburetor bowl gasket leaks. Replace gasket.

Troubleshooting Checklist

When the engine starts hard, runs roughly or stalls at low idle speed, check the following areas before adjusting or disassembling the carburetor.

- Make sure the fuel tank is filled with clean, fresh gasoline.
- Make sure the fuel tank cap vent is not blocked and that it is operating properly.
- Make sure fuel is reaching the carburetor. This includes checking the fuel shut-off valve, fuel tank filter screen, in-line fuel filter, fuel lines and fuel pump for restrictions or faulty components as necessary.
- Make sure the air cleaner base and carburetor are securely fastened to the engine using gaskets in good condition.
- Make sure the air cleaner element (including precleaner if equipped) is clean and all air cleaner components are fastened securely.
- Make sure the ignition system, governor system, exhaust system, and throttle and choke controls are operating properly.

If the engine is hard-starting, runs roughly, or stalls at low idle speed, it may be necessary to adjust or service the carburetor.

High Altitude Operation

When operating the engine at altitudes of 1500 m (5000 ft.) and above, the fuel mixture tends to get over-rich. This can cause conditions such as black, sooty exhaust smoke, misfiring, loss of speed and power, poor fuel economy, and poor or slow governor response.

To compensate for the effects of high altitude, special high altitude jet kits are available. The kits include a new main jet, slow jet (where applicable), necessary gaskets and O-Rings. Refer to the parts manual for the correct kit number.

Fuel Shut-off Solenoid

Most carburetors are equipped with a fuel shut-off solenoid. The solenoid is attached in place of the fixed main jet screw on the flywheel side of the carburetor. See Figure 5-4. The solenoid has a spring-loaded pin that retracts when 12 volts is applied to the lead, allowing fuel flow through the main jet.

When current is removed the pin extends blocking the main fuel jet and preventing fuel from entering the carburetor.

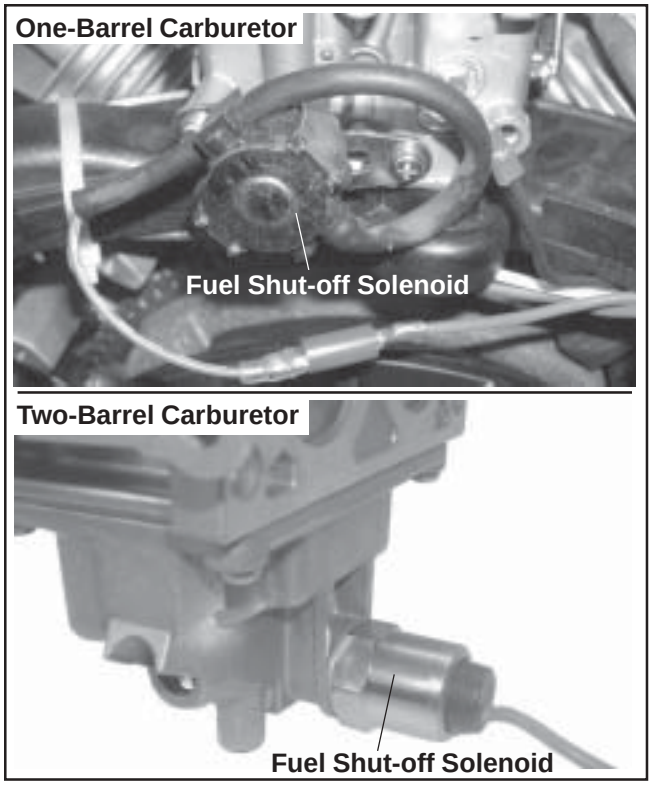

Figure 5-4. Fuel Shut-off Solenoid.

Below is a simple test, made with the engine off, that can determine if the solenoid is functioning properly:

1. Shut off fuel and remove the solenoid from the carburetor. When the solenoid is loosened and removed, gas will leak out of the carburetor. Have a container ready to catch the fuel.
2. Wipe the tip of the solenoid with a shop towel or blow it off with compressed air, to remove any remaining fuel. Take the solenoid to a location with good ventilation and no fuel vapors present. You will also need a 12 volt power source that can be switched on and off.
3. Be sure the power source is switched “off”. Connect the positive power source lead to the red lead of the solenoid. Connect the negative power source lead to the solenoid bracket.
4. Turn the power source “on” and observe the pin in the center of the solenoid. The pin should retract with the power “on” and return to its original position with the power off. Test several times to verify operation.

Carburetor Adjustments (CH18-740)

General

In compliance with government emission standards, the carburetor is calibrated to deliver the correct air-to-fuel mixture to the engine under all operating conditions. The high-speed mixture is preset and cannot be adjusted. Pre-compliance carburetors contain a low idle fuel adjusting needle, on "certified" compliance carburetors, both the low and high speed mixture circuits are pre-established and cannot be adjusted. The low idle speed (RPM) is the only adjustment available. See Figures 5-5 and 5-6.

Depending on model and application, engines may also be equipped with a "Governed Idle System." If equipped with a "Governed Idle System", refer to "**Models with Governed Idle System**" when performing any carburetor adjustment, as an additional step to the listed adjustment procedure(s) is required.

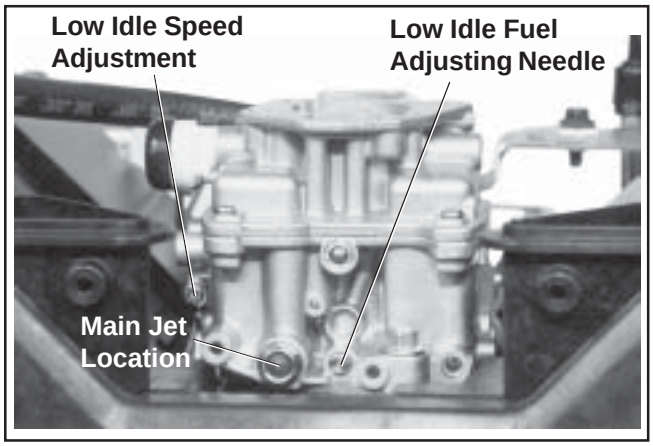

Figure 5-5. Pre-Compliance Carburetor with Low Idle Adjustment.

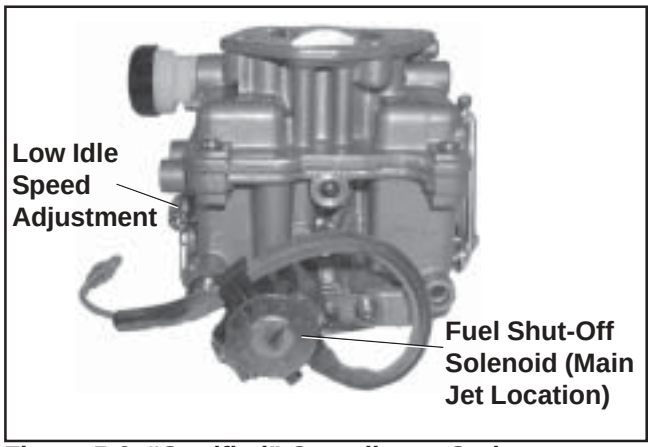

Figure 5-6. "Certified" Compliance Carburetor.

NOTE: Carburetor adjustments should be made only after the engine has warmed up.

Adjusting Low Idle Speed and Fuel (Some Models)

To adjust the carburetor idle speed, see Figure 5-5 and follow these steps.

1. With the engine **stopped**, turn the low idle fuel adjusting needle in **clockwise** until it bottoms **lightly**.

   NOTE: The tip of the idle fuel adjusting needle is tapered to critical dimensions. Damage to the needle and the seat in the carburetor body will result if the needle is forced.

2. Now turn the adjusting needle out **counterclockwise** 1-1/2 turns.

3. Start the engine and run at half throttle for 5 to 10 minutes to warm up. The engine must be warm before making final settings. Check that the throttle and choke plates can fully open.

   NOTE: The carburetor has a self-relieving choke. Choke plate and shaft assembly is spring loaded. Check to make sure plate moves freely and is not binding and affecting idle fuel delivery.

4. Place the throttle control into the "idle" or "slow" position. Turn the low idle speed adjusting screw in or out to obtain a low idle speed of 1200 RPM (± 75 RPM). Check the speed using a tachometer.

   NOTE: The actual low idle speed depends on the application. Refer to the equipment manufacturer's recommendations. The low idle speed for basic engines is 1200 RPM. To ensure best results when setting the low idle fuel needle, the low idle speed should be 1200 RPM (± 75 RPM).

5. Turn the low idle fuel adjusting needle in (slowly) until engine speed decreases and then back out approximately 3/4 turn to obtain the best low speed performance.

6. Recheck the idle speed using a tachometer and readjust the speed as necessary.

Models with Governed Idle System

An optional governed idle control system is supplied on some engines. The purpose of this system is to maintain a desired idle speed regardless of ambient conditions (temperature, parasitic load, etc.) that may change. Engines with this feature contain a small secondary spring connected between the governor lever and the lower adjustment tab of the main bracket. See Figure 5-7.

The system requires an additional procedure for setting the idle speed. If speed adjustments are required proceed as follows.

1. Make any necessary speed or control adjustments following the appropriate instructions covered in this section.

2. Move the throttle control to the idle position. Hold the governor lever away from the carburetor, or hold the throttle lever so it is tight against the idle speed adjusting screw, to negate the governor activation. See Figure 5-8. Check the speed with a tachometer and adjust it to 1500 RPM.

3. Release the governor lever and allow the engine to return to the governed idle speed. Check it with a tachometer against the equipment manufacturers recommended idle speed. Governed Idle Speed (RPM) is typically 300 RPM (approximate) higher than the low idle speed. If adjustment is necessary, bend the adjusting tab on the speed control assembly to set. See Figure 5-7.

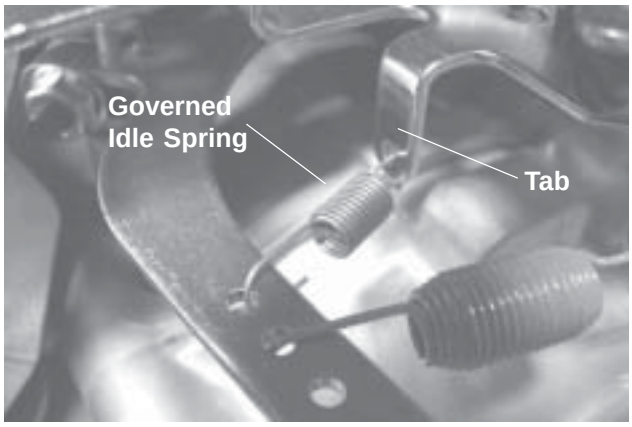

Figure 5-7. Governed Idle Spring Location.

Figure 5-8. Holding Throttle Lever Against Idle Stop Screw (One-Barrel Carburetor).

Servicing

Float

It is not necessary to remove the carburetor from the engine to check and adjust the float.

1. Remove the air cleaner and breather hose. Refer to Section 9 – ''Disassembly''.

2. Disconnect the fuel line from the carburetor. See Figure 5-9.

3. Clean dirt and debris from exterior of carburetor.

4. Remove the four screws holding the two carburetor halves together. Carefully lift the upper body off the carburetor body and disconnect choke linkage.

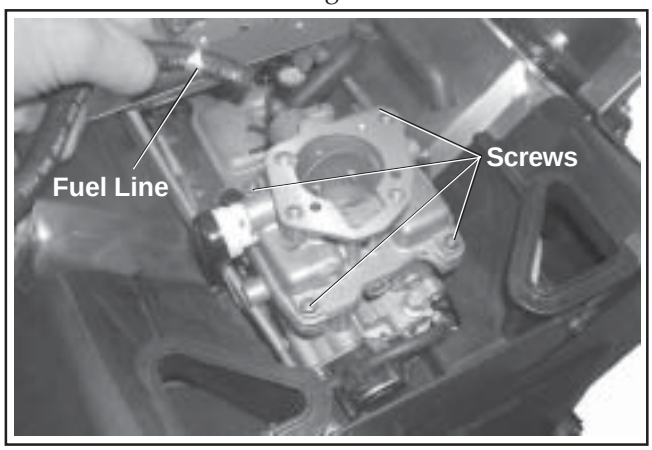

Figure 5-9. Carburetor Detail.

5. Hold the carburetor upper body so that the float assembly hangs vertically and rests lightly against the fuel inlet needle. The fuel inlet needle should be fully seated, but the needle tip should not be depressed. See Figure 5-10.

NOTE: The fuel inlet needle tip is spring loaded. Make sure the float assembly rests against the fuel inlet needle without depressing the tip.

6. The correct float height adjustment is 22 mm (0.86 in.), measured from the float bottom to the air horn casting. Adjust the float height by carefully bending the tab.

   NOTE: Be sure to measure from the casting surface, not the rubber gasket surface.

7. If proper float height adjustment cannot be achieved, check to see if the fuel inlet needle is dirty, obstructed or worn. Remove the brass screw and float assembly to remove the fuel inlet needle.

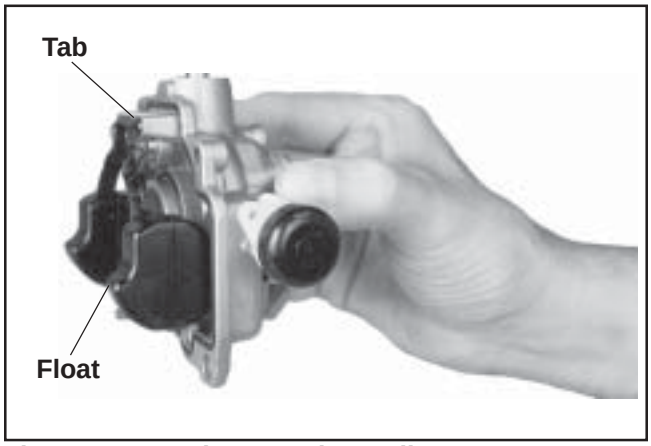

Figure 5-10. Carburetor Float Adjustment.

8. Once the proper float height is obtained, carefully lower the carburetor air horn assembly onto the carburetor body, connecting the choke linkage. Install the four screws. Torque the screws to **1.7 N·m (15 in. lb.)**. See Figure 5-9.

9. Connect the fuel line.

10. Install the breather hose and air cleaner assembly, following the steps in Section 11 – ''Reassembly''.

Disassembly

Disassemble the carburetor using the following steps. See Figure 5-11.

1. Remove the air cleaner, breather hose and carburetor. Refer to Section 9 – "Disassembly".

2. Remove the four screws and carefully separate the air horn assembly from the carburetor body.

3. Loosen the screw securing the float assembly to the air horn and remove the float, float shaft and fuel inlet needle.

4. Remove the slow jet from the carburetor body.

   NOTE: The main jet is a fixed jet and can be removed if required. Fixed jets for high altitude are available.

5. Remove the black cap on the end of the choke shaft only if it is necessary to inspect and clean the shaft spring.

6. Remove the low idle speed adjusting screw and spring from the carburetor body.

7. In order to clean the ''off-idle'' vent ports and bowl vent thoroughly, use a good carburetor solvent (like Gumout™). Blow clean compressed air through the idle adjusting needle hole. Be careful to use a suitable shop rag to prevent debris from hitting someone.

8. Remove the preformed rubber gasket only if it is to be replaced. If it is removed for any reason, replace it.

Inspection/Repair

Carefully inspect all components and replace those that are worn or damaged.

- Inspect the carburetor body for cracks, holes and other wear or damage.
- Inspect the float for cracks, holes, and missing or damaged float tabs. Check the float hinge and shaft for wear or damage.
- Inspect the fuel inlet needle and seat for wear or damage.
- Inspect the tip of the low idle fuel adjusting needle for wear or grooves.
- The choke plate is spring loaded. Check to make sure it moves freely on the shaft.

NOTE: The choke and throttle plate assemblies are staked and matched to the shafts at the factory. They are not serviceable items.

Always use new gaskets when servicing or reinstalling carburetors. Repair kits are available which include new gaskets and other components. These kits are described on the next page.

Reassembly

Reassemble the carburetor using the following steps. See Figure 5-11.

1. Assemble the fuel inlet needle to the float tab. Install the float, float shaft and inlet needle to the air horn. Tighten the screw. Check float height using the procedure found previously in the ''Adjustments'' subsection.
2. Install the slow jet with the stepped end toward the bottom of the carburetor. Make sure jet is fully seated.
3. Install the low idle adjusting needle and spring.
4. Assemble the upper body onto the lower carburetor body using the four screws. Torque the screws to **1.7 N·m (15 in. lb.)**.
5. Install the carburetor on the engine following the procedures in Section 11 – ''Reassembly.''

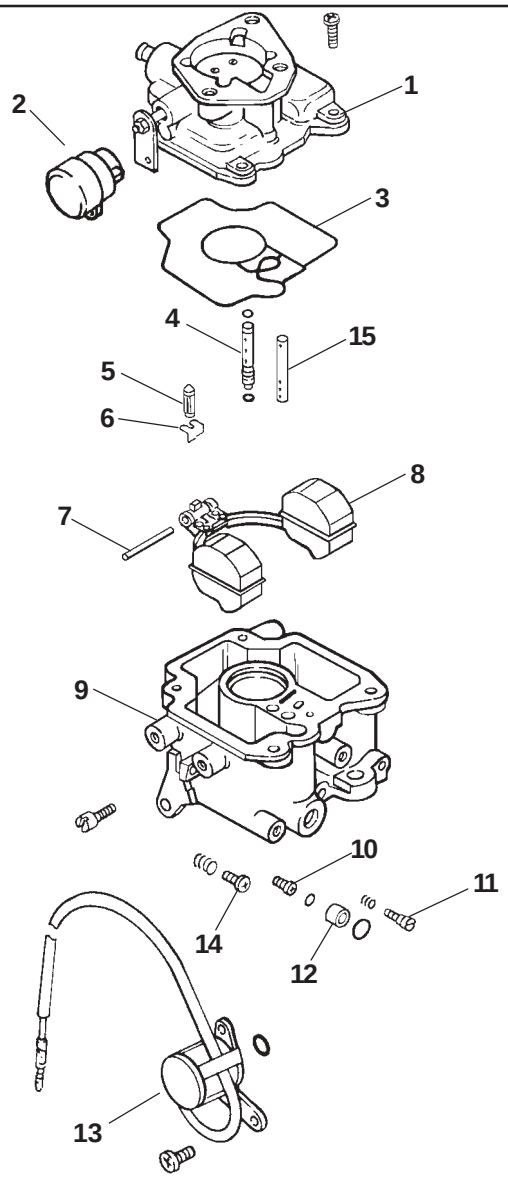

1. Carburetor Upper Body (Choke)
2. Self-relieving Choke
3. Body Gasket (Formed Rubber)
4. Slow Speed Jet
5. Inlet Needle Valve
6. Clip
7. Float Pin
8. Float Assembly (Kit)
9. Carburetor Lower Body (Throttle)
10. Main Jet
11. Idle Fuel Adjusting Needle (some models)
12. Solenoid Seat
13. Fuel Shut-off Solenoid (Kit)
14. Idle Speed Adjusting Screw
15. Jet (Accelerator Pump Carburetor only)
16. Accelerator Pump Cover
17. Diaphragm
18. Diaphragm Spring
19. O-Ring
20. Rubber Boot
21. Bushing
22. Return Spring

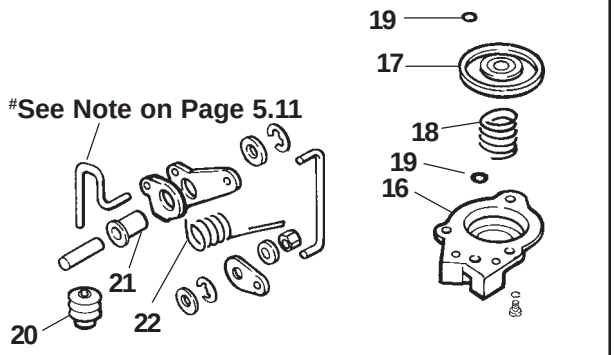

Accelerator Pump Version Only

Figure 5-11. CH18-740 Carburetor – Exploded View.

Components such as the throttle and choke shaft assemblies, throttle plate, choke plate, low idle fuel needle, and others, are available separately.

Always refer to the Parts Manual for the engine being serviced, to ensure the correct repair kits and replacement parts are ordered. Service/repair kits available for the carburetor and affiliated components are:

Carburetor Repair Kit
Float Kit
High Altitude Kit (1525-3048 m/5,000-10,000 ft.)
High Altitude Kit (over 3048 m/10,000 ft.)
Solenoid Assembly Kit
Accelerator Pump Seal and Bushing Kit
Accelerator Pump Diaphragm Kit
Choke Repair Kit

#NOTE: If accelerator pump rod movement is restricted or corrosion exists in the pump rod housing hole; use a 0.153 in. (3.9 mm) or No. 23 drill and carefully clean (resize) the hole to restore proper operation. Blow out the hole with air and lightly lubricate with oil on reassembly.

Carburetor

Keihin BK Two-Barrel Carburetor (CH750)

The carburetor used on CH750 engines is a Keihin two-barrel side draft design with fixed main jets. See Figure 5-12. A self-relieving choke similar to that used on single venturi carburetors is also contained in the design. The circuits within the carburetor function as described following:

Float Circuit:

The fuel level in the bowl is maintained by the float and fuel inlet needle. The buoyant force of the float stops fuel flow when the engine is at rest. When fuel is being consumed, the float will drop and fuel pressure will push the inlet needle away from the seat, allowing more fuel to enter the bowl. When demand ceases, the buoyant force of the float will again overcome the fuel pressure, rising to the predetermined setting and stop the flow.

Slow & Mid-Range Circuit:

At low speeds the engine operates only on the slow circuit. As a metered amount of air is drawn through the slow air bleed jets, fuel is drawn through the two main jets and further metered through the slow jets. Air and fuel are mixed in the body of the slow jet and exit to the transfer port. From the transfer port the air fuel mixture is delivered to the idle progression chamber. From the idle progression chamber the air fuel mixture is metered through the idle port passages. At low idle when the vacuum signal is weak, the air/fuel mixture is controlled by the setting of the idle fuel adjusting screws. This mixture is then mixed with the main body of air and delivered to the engine. As the throttle plate opening increases, greater amounts of air/fuel mixture are drawn in through the fixed and metered idle progression holes. As the throttle plate opens further the vacuum signal becomes great enough so the main circuit begins to work.

Main (High-Speed) Circuit:

At high speeds/loads the engine operates on the main circuit. As a metered amount of air is drawn through the four air jets, fuel is drawn through the main jets. The air and fuel are mixed in the main nozzles and then enter the main body of airflow, where further mixing of the fuel and air occurs. This mixture is then delivered to the combustion chamber. The carburetor has a fixed main circuit; no adjustment is possible.

Carburetor Adjustments

Adjustment

NOTE: Carburetor adjustments should be made only after the engine has warmed up.

The carburetor is designed to deliver the correct fuel-to-air mixture to the engine under all operating conditions. The main fuel jet is calibrated at the factory and is not adjustable*. The idle fuel adjusting needle is also set at the factory and normally does not need adjustment.

Depending on model and application, engines may also be equipped with a “Governed Idle System.” If equipped with a “Governed Idle System”, refer to “**Models with Governed Idle System**” when performing any carburetor adjustment, as an additional step to the listed adjustment procedure(s) is required.

*NOTE: Engines operating at altitudes above approximately 1500 m (5000 ft.) may require a special ''high altitude'' main jet. Refer to ''High Altitude Operation.''

If, however, the engine is hard-starting or does not operate properly, it may be necessary to adjust or service the carburetor.

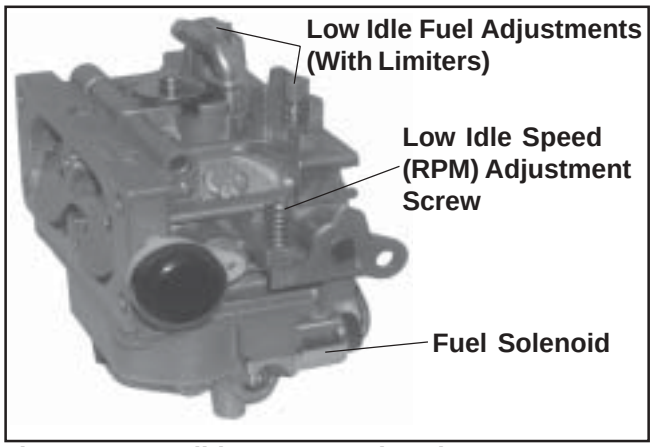

Figure 5-12. Keihin Two-Barrel Carburetor.

Carburetor Adjustment

Low Idle Speed (RPM) Adjustment

1. **Low Idle Speed (RPM) Setting:** Place the throttle control into the "**idle**" or "**slow**" position. Set the low idle speed to **1200 RPM*** (± 75 RPM) by turning the low idle speed adjusting screw **in or out**. Check the speed using a tachometer.

*NOTE: The actual low idle speed depends on the application. Refer to the equipment manufacturer's recommendations. The low idle speed for basic engines is 1200 RPM. To ensure best results when setting the low idle fuel needle, the low idle speed should be 1200 RPM (± 75 RPM).

Low Idle Fuel Adjustment

NOTE: Engines will have fixed low idle or limiter caps on the two idle fuel adjusting needles. Step 3 can only be performed within the limits allowed by the cap. Do not attempt to remove the limiter caps.

1. Start the engine and run at half throttle for 5 to 10 minutes to warm up. The engine must be warm before doing steps 2, 3, and 4.

2. Place the throttle control into the "**idle**" or "**slow**" position. Adjust the low idle speed to **1200 RPM***. Follow the "Adjusting the Low Idle Speed (RPM)" procedure.

3. **Low Idle Fuel Needle(s) Setting:** Place the throttle into the "idle" or "slow" position.

   a. Turn one of the low idle fuel adjusting needles out (counterclockwise) from the preliminary setting until the engine speed decreases (rich). Note the position of the needle. Now turn the adjusting needle in (clockwise). The engine speed may increase, then it will decrease as the needle is turned in (lean). Note the position of the needle. Set the adjusting needle midway between the rich and lean settings. See Figure 5-13.

   b. Repeat the procedure on the other low idle adjustment needle.

4. Recheck/adjust the **Low Idle Speed (RPM)**, to the specified setting.

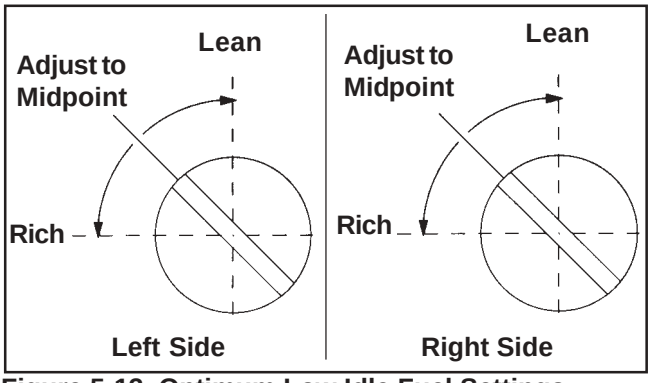

Figure 5-13. Optimum Low Idle Fuel Settings.

Models with Governed Idle System

An optional governed idle control system is supplied on some engines. The purpose of this system is to maintain a desired idle speed regardless of ambient conditions (temperature, parasitic load, etc.) that may change. Engines with this feature contain a small secondary spring connected between the governor lever and the lower adjustment tab of the main bracket. See Figure 5-14.

The system requires an additional procedure for setting the idle speed. If speed adjustments are required proceed as follows.

1. Make any necessary speed or control adjustments following the appropriate instructions covered in this section.

2. Move the throttle control to the idle position. Hold the governor lever away from the carburetor, or hold the throttle lever so it is tight against the idle speed adjusting screw, to negate the governor activation. See Figure 5-15. Check the speed with a tachometer and adjust it to 1500 RPM.

3. Release the governor lever and allow the engine to return to the governed idle speed. Check it with a tachometer against the equipment manufacturers recommended idle speed. Governed Idle Speed (RPM) is typically 300 RPM (approximate) higher than the low idle speed. If adjustment is necessary, bend the adjusting tab on the speed control assembly to set. See Figure 5-14.

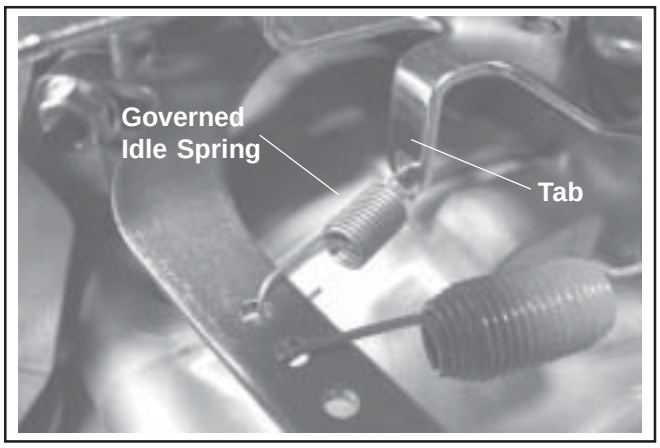

Figure 5-14. Governed Idle Spring Location.

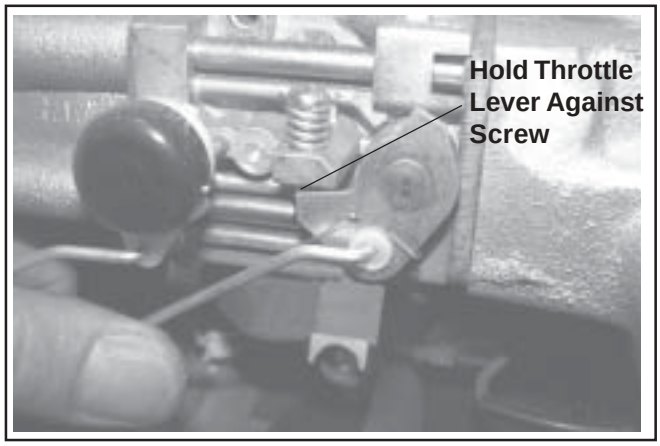

Figure 5-15. Holding Throttle Lever Against Idle Stop Screw (Two-Barrel Carburetor).

Carburetor Servicing

Float Replacement

If symptoms described in the carburetor troubleshooting guide indicate float level problems, remove the carburetor from the engine to check and/or replace the float. Use a float kit to replace the float, pin, float valve, clip and screw.

1. Perform the removal procedures for the Heavy Duty Air Cleaner and Carburetor outlined in Section 9 "Disassembly."

2. Clean the exterior surfaces of dirt or foreign material before disassembling the carburetor. Remove the four mounting screws and carefully separate the fuel bowl from the carburetor. Do not damage the inner or bowl O-Ring. Transfer any remaining fuel into an approved container. Save all parts. Fuel can also be drained prior to bowl removal by loosening/removal of the bowl drain screw. See Figure 5-16.

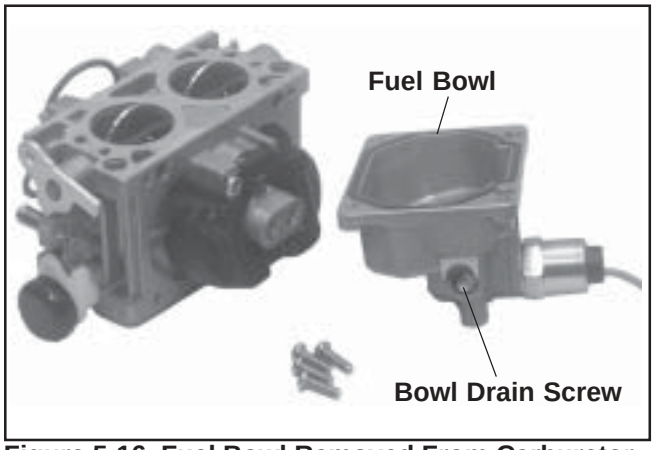

Figure 5-16. Fuel Bowl Removed From Carburetor.

3. Remove the float pin screw and lift out the old float, pin and inlet needle. See Figure 5-17. Discard all of the parts. The seat for the inlet needle is not serviceable, and should not be removed.

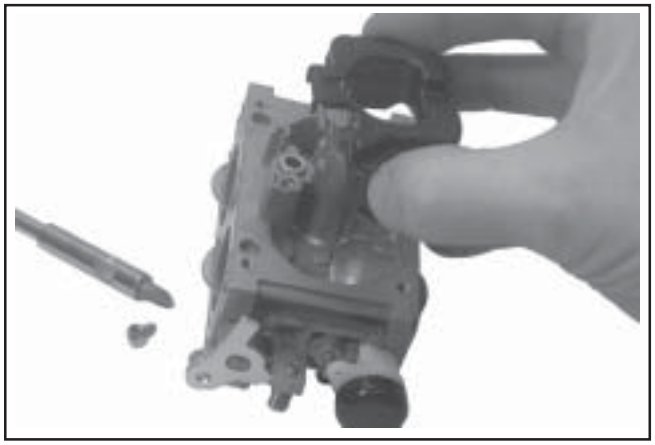

Figure 5-17. Removing Float and Inlet Needle.

4. Clean the carburetor bowl and inlet seat areas as required, before installing the new parts.

5. Attach the inlet needle to the plastic tang of the float with the wire clip. The formed 90° lip should point up, with the needle valve hanging down. See Figure 5-18.

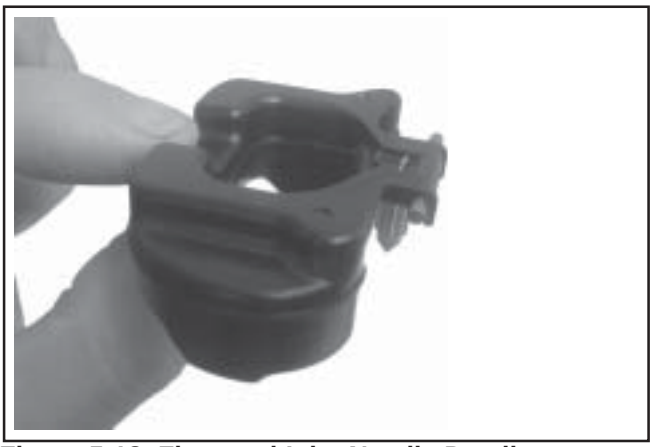

Figure 5-18. Float and Inlet Needle Details.

6. Install the float and inlet needle down into the seat and carburetor body. Install the new pivot pin through the float hinge and secure with the new retaining screw. See Figure 5-19.

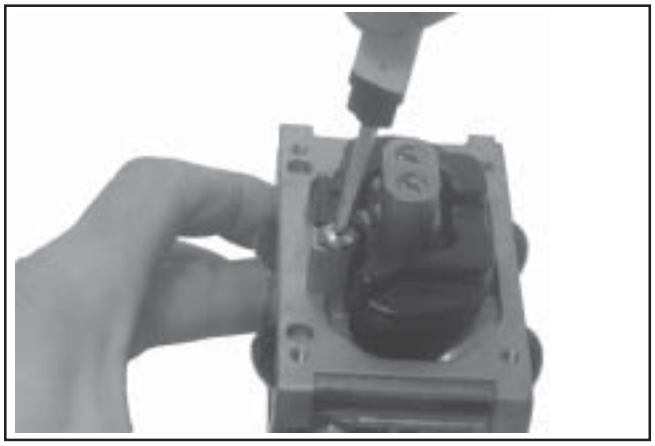

Figure 5-19. Installing Float Assembly.

7. Hold the carburetor body so the float assembly hangs vertically and rests lightly against the fuel inlet needle. The inlet needle should be fully seated but the center pin of the needle (on retainer clip end) should not be depressed. Check the float height adjustment.

NOTE: The inlet needle center pin is spring loaded. Make sure the float rests against the fuel inlet needle without depressing the center pin.

8. The correct float height setting is **17 mm (0.669 in.) ± 1.5 mm (0.059 in.)**, measured from the float bottom to the body of the carburetor. See Figure 5-20. Replace the float if the height is different than the specified setting. **DO NOT** attempt to adjust by bending float tab.

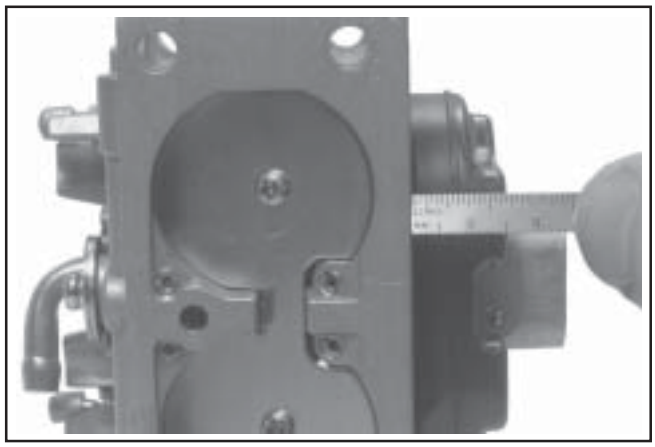

Figure 5-20. Checking Float Height.

NOTE: Be sure to measure from the casting surface, not the rubber gasket, if still attached.

9. When the proper float height is obtained, carefully reinstall the fuel bowl, using new O-Rings onto the carburetor. Secure with the four original screws. Torque the screws to **2.5 ± 0.3 N·m (23 ± 2.6 in. lb.)**. See Figure 5-21.

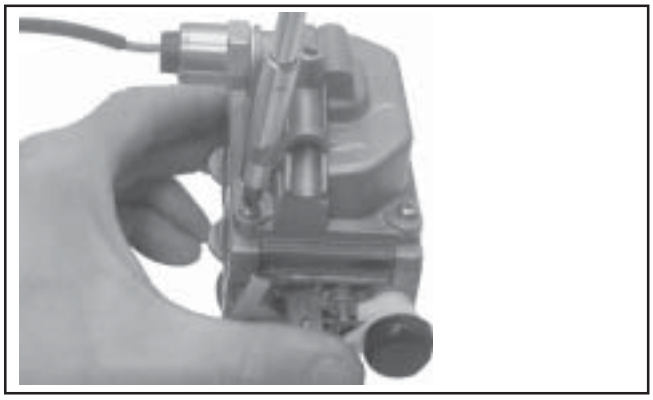

Figure 5-21. Installing Fuel Bowl.

10. Install the carburetor and the heavy-duty air cleaner as outlined in Section 11 "Reassembly."

Disassembly/Overhaul

1. Clean the exterior surfaces of dirt or foreign material before disassembling the carburetor. Remove the four mounting screws and separate the fuel bowl from the carburetor. Transfer any remaining fuel into an approved container. Remove and discard the old O-Rings. Fuel can also be drained prior to bowl removal by loosening/removal of the bowl drain screw. See Figure 5-22.

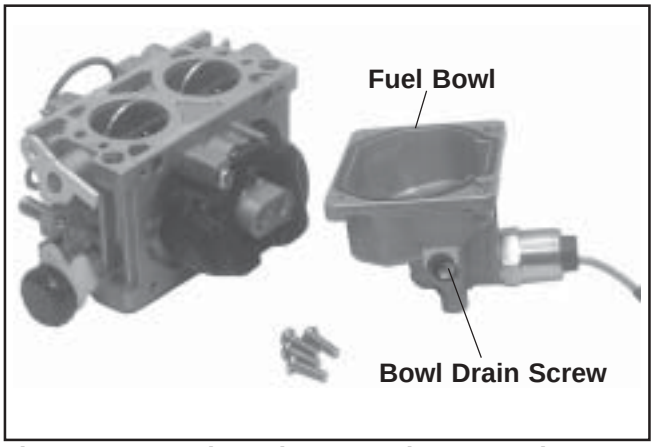

Figure 5-22. Fuel Bowl Removed From Carburetor.

NOTE: Further disassembly of the fuel bowl is not necessary unless the Fuel Solenoid Kit, or Fuel Bowl Kit (obtained separately), will also be installed.

2. Remove the float pin screw and lift out the old float, pin, and inlet needle. See Figure 5-23. Discard all the old parts. The seat for the inlet needle is not serviceable, and should not be removed.

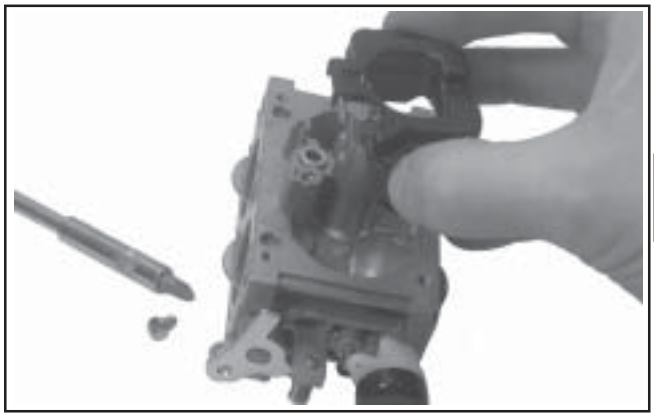

Figure 5-23. Removing Float and Inlet Needle.

3. Use an appropriate size flat screwdriver, and carefully remove the two main jets from the carburetor. Note and mark the jets by location for proper reassembly. The main jets may be size/side specific. After the main jets are removed, the main nozzles can be removed out through the bottom of the main towers. Note the orientation/direction of the nozzles. The end with the two raised shoulders should be out/down adjacent to the main jets. Save the parts for cleaning and reuse. See Figure 5-24.

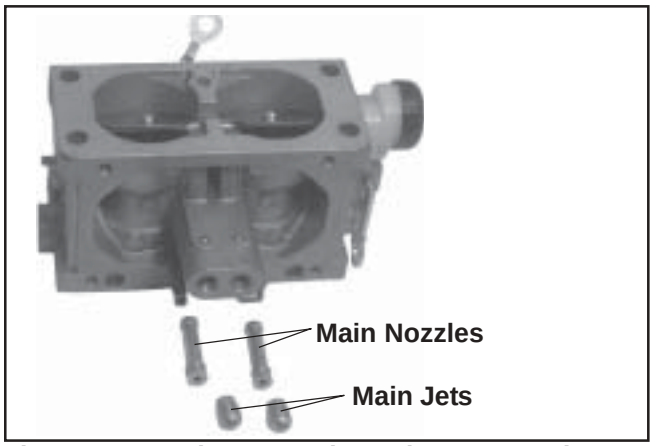

Figure 5-24. Main Jets and Nozzles Removed.

4. Remove the screw securing the flat washer and ground lead (if equipped), from the top of the carburetor; then carefully pull (lift) out the two slow jets. The slow jets may be sized/side specific, mark or tag for proper reassembly. Note the small O-Ring on the bottom of each jet. See Figures 5-25 and 5-26. Save parts for cleaning and reuse unless a Jet Kit is also being installed. Clean the slow jets using compressed air. Do not use wire or carburetor cleaner.

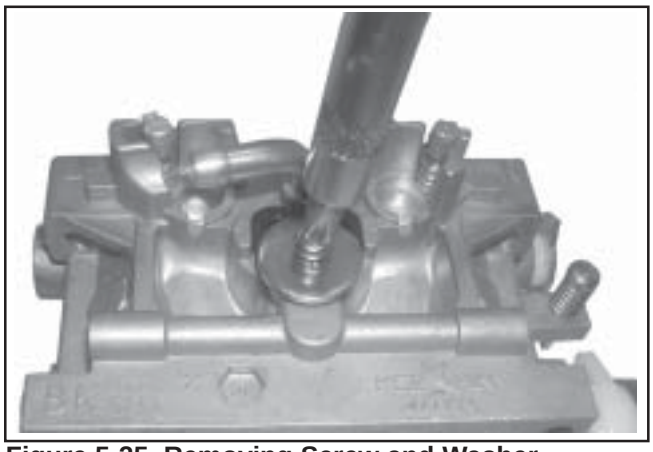

Figure 5-25. Removing Screw and Washer.

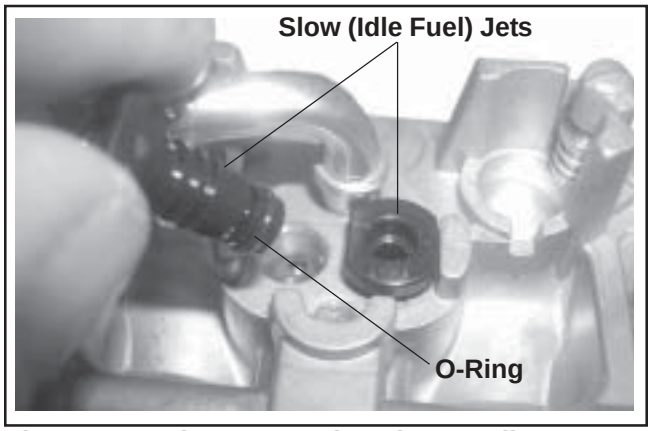

Figure 5-26. Slow Jets and O-Ring Detail.

5. Remove the idle speed (RPM) adjustment screw and spring from the carburetor. Discard the parts.

NOTE: The carburetor is now disassembled for appropriate cleaning and installation of the parts in the overhaul kit. Further disassembly is not necessary. The throttle shaft assembly, fuel inlet seat, idle fuel adjustment screws with limiter, and carburetor body, are non-serviceable items and should not be removed. The choke shaft assembly is serviceable, however it should not be removed unless a Choke Repair Kit will be installed.

6. Clean the carburetor body, main jets, vent ports, seats, etc. using a good commercially available carburetor solvent. Keep away from plastic or rubber parts if non-compatible. Use clean, dry compressed air to blow out the internal channels and ports. Do not use metal tools or wire to clean orifices and jets. Inspect and thoroughly check the carburetor for cracks, wear, or damage. Inspect the fuel inlet seat for wear or damage. Check the spring loaded choke plate to make sure it moves freely on the shaft.

7. Clean the carburetor fuel bowl as required.

8. Install the two main nozzles into the towers of the carburetor body. The end of the main nozzles with the two raised shoulders should be out/down (adjacent to the main jets). Make sure the nozzles are completely bottomed. Carefully install the main jets into the towers of the carburetor body on the appropriate side, as identified when removal was performed. See Figure 5-27.

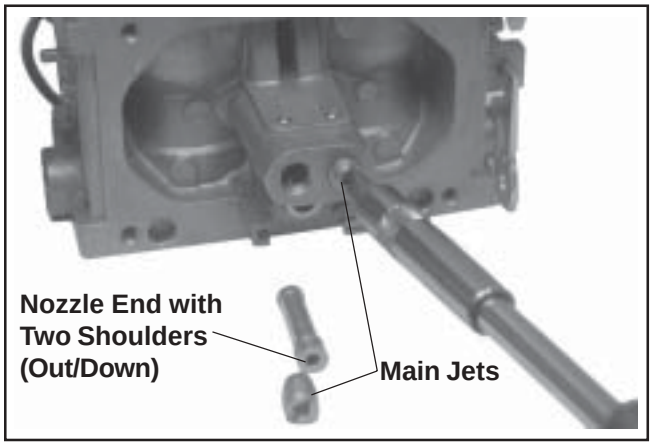

Figure 5-27. Installing Main Nozzles and Main Jets.

9. Make sure the O-Ring near the bottom of each slow jet is new, or in good condition. Align and insert the two slow jets into the top of carburetor. See Figure 5-26.

10. Install the large flat retaining washer and secure with the mounting screw, attaching the ground lead if originally secured by the screw.

11. Install the new idle speed (RPM) adjustment screw and spring onto the carburetor. Thread in until 3 or 4 threads are exposed, as an initial adjustment. See Figure 5-28.

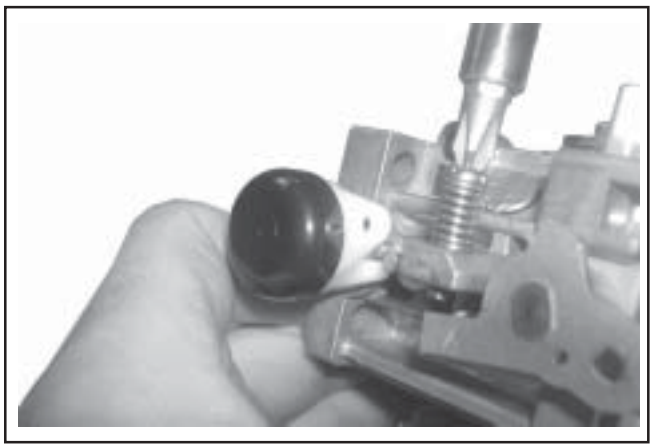

Figure 5-28. Installing Idle Speed Adjusting Screw and Spring.

12. Attach the inlet needle to the plastic tang of the float with the wire clip. The formed 90° lip should point up, with the needle valve hanging down. See Figure 5-29.

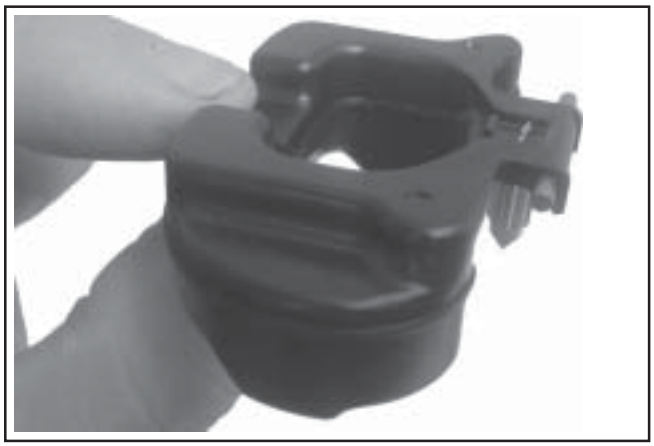

Figure 5-29. Float and Inlet Needle Details.

13. Install the float and inlet needle down into the seat and carburetor body. Install the new pivot pin through the float hinge and secure with the new retaining screw. See Figure 5-30.

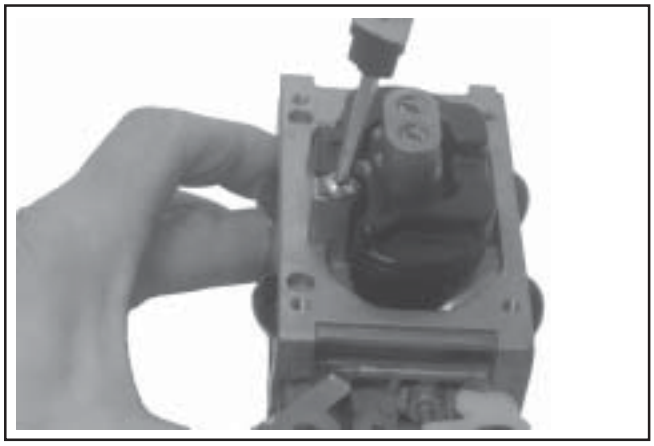

Figure 5-30. Installing Float Assembly.

14. Hold the carburetor body so the float assembly hangs vertically and rests lightly against the fuel inlet needle. The inlet needle should be fully seated but the center pin of the needle (on retainer clip end) should not be depressed. Check the float height adjustment.

NOTE: The inlet needle center pin is spring loaded. Make sure the float rests against the fuel inlet needle without depressing the center pin.

15. The correct float height setting is **17 mm (0.669 in.) ± 1.5 mm (0.059 in.)**, measured from the float bottom to the body of the carburetor. See Figure 5-31. Replace the float if the height is different than the specified setting. Do not attempt to adjust by bending float tab.

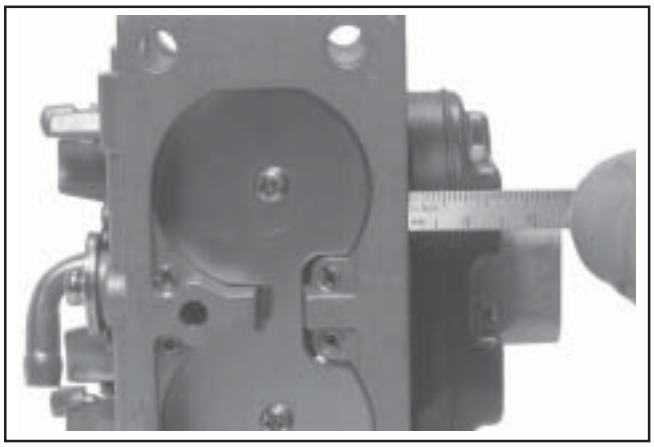

Figure 5-31. Checking Float Height.

NOTE: Be sure to measure from the casting surface, not the rubber gasket, if still attached.

16. When the proper float height is obtained, carefully reinstall the fuel bowl, using new O-Rings onto the carburetor. Secure with the four original screws. Torque the screws to **2.5 ± 0.3 N·m (23 ± 2.6 in. lb.)**. See Figure 5-32.

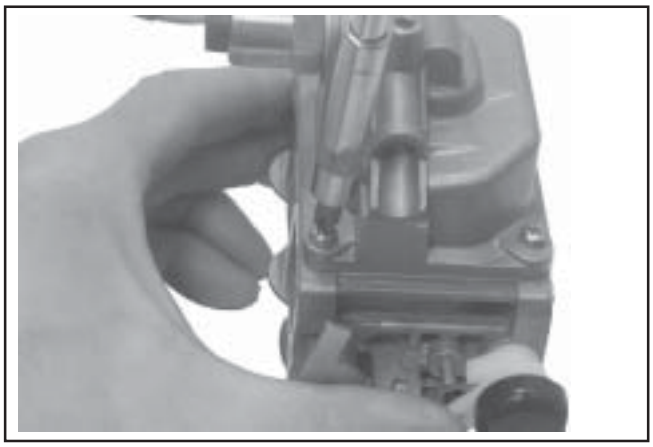

Figure 5-32. Installing Fuel Bowl.

Choke Repair

1. Remove the carburetor from the engine. Discard the old mounting gaskets for the air cleaner and carburetor.

2. Clean the areas around the choke shaft and the self-relieving choke mechanism thoroughly.

3. Remove and discard the plastic cap from the end of the choke lever/shaft assembly.

4. Note the position of the spring legs and the choke plate for correct reassembly later. See Figure 5-33. Remove the two screws attaching the choke plate to the choke shaft. Pull the shaft out of the carburetor body and discard the removed parts.

Figure 5-33. Choke Details.

5. Use a screw extractor (easy-out) and remove the original choke shaft bushing with the old choke lever from the carburetor housing. Save the bushing to use as a driver for installing the new bushing. Discard the old lever.

6. Clean the I.D. of both choke shaft bores as required.

7. Insert the new bushing through the new choke lever from the outside, and start the bushing in the outer shaft bore. Position the choke lever so the protruding boss on the carburetor housing is between the two stops formed in the choke lever. See Figure 5-34.

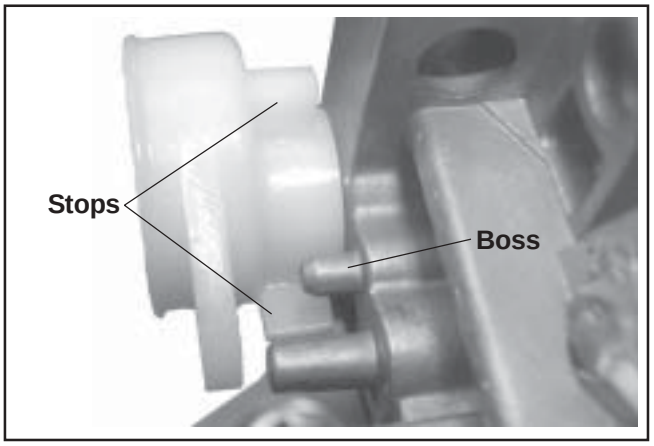

Figure 5-34. Assembling Choke Lever.

8. Turn the old bushing upside down and use it as a driver to carefully press or tap the new bushing into the carburetor body until it bottoms. Check that the choke lever pivots freely without restriction or binding. See Figure 5-35.

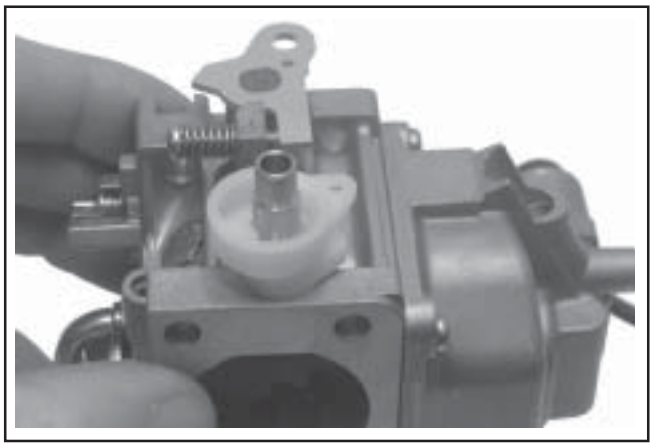

Figure 5-35. Installing Bushing.

9. Install the new return spring onto the new choke shaft, so the upper leg of the spring is between the two formed "stops" on the end of the choke shaft. See Figure 5-36.

NOTE: Make sure it stays in this location during the following step.

Figure 5-36. Choke Shaft and Spring Details.

10. Slide the choke shaft and spring into the carburetor. Pivot (preload) the shaft and set the inner leg of the spring, against the formed stop within the choke lever as originally assembled. See Figure 5-33. The opposing leg of the spring must still be between the formed "stops" of the choke shaft.

11. Place a drop of Loctite® on the threads of each new screw. Position and install the new choke plate to the flat side of the choke shaft. Start the two screws. Close the choke and check the plate alignment within the carburetor throat, then tighten the screws securely. **Do not overtighten.** See Figure 5-37.

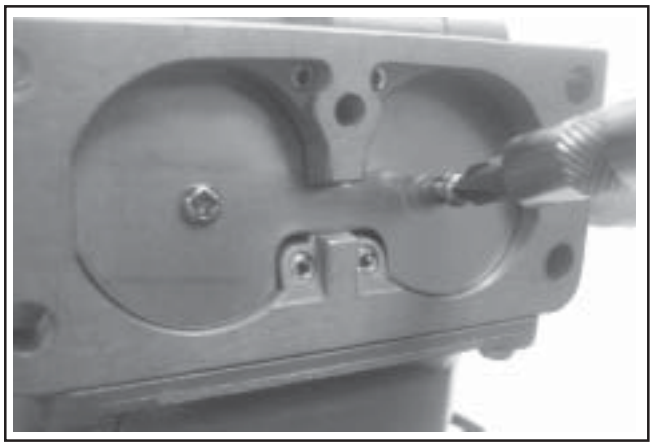

Figure 5-37. Installing Choke Plate.

12. Check for proper operation and free movement of the parts. Install the new cap.

Always use new gaskets when servicing or reinstalling carburetors. Repair kits are available which include new gaskets and other components. Service/repair kits available for Keihin BK two-barrel carburetors and affiliated components are:

Carburetor Overhaul Kit
Float Kit
Fuel Solenoid Kit
Choke Repair Kit
Bowl Kit
High Altitude Kit (1525-3048 m/5,000-10,000 ft.)
High Altitude Kit (Over 3048 m/10,000 ft.)

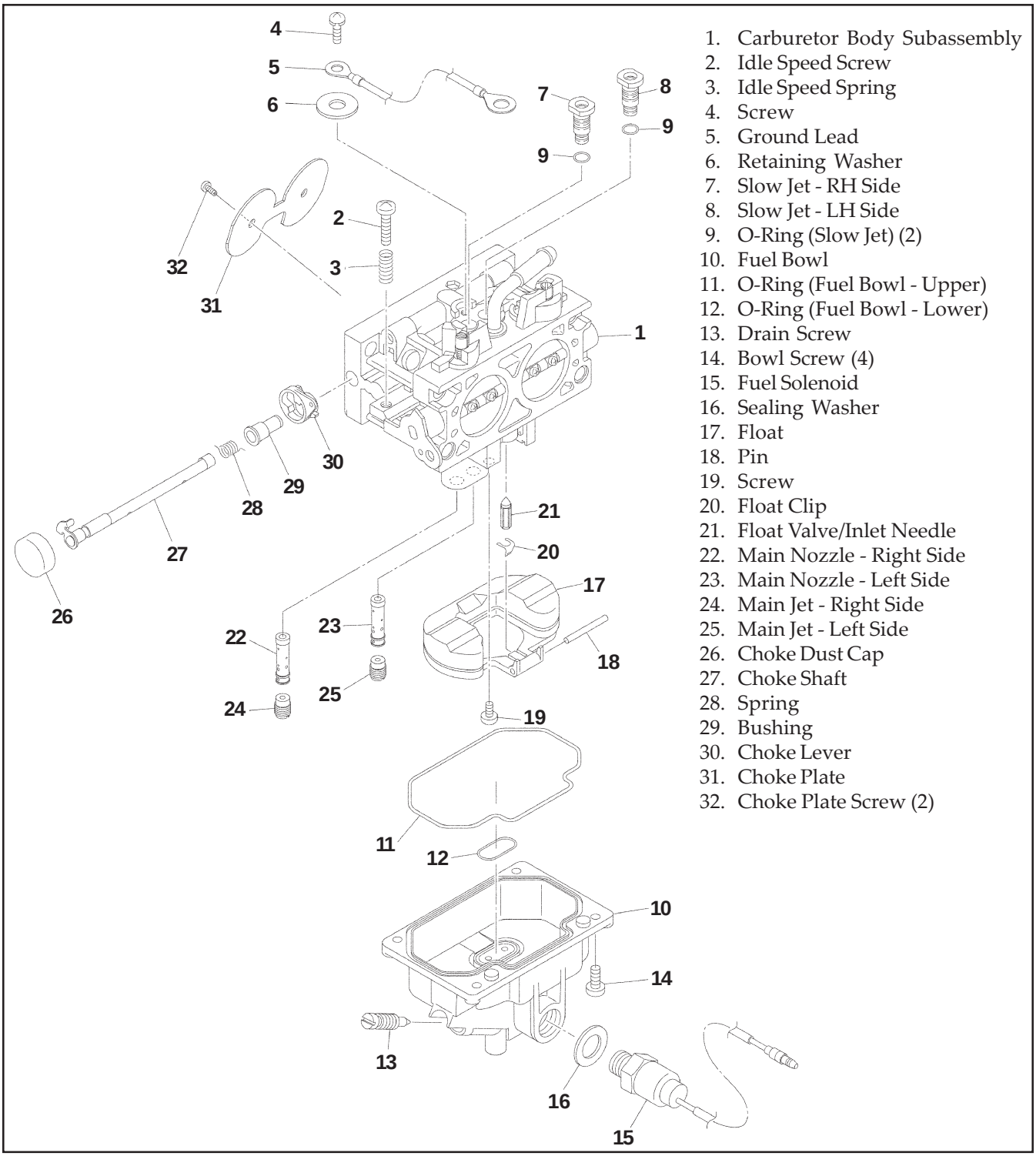

1. Carburetor Body Subassembly
2. Idle Speed Screw
3. Idle Speed Spring
4. Screw
5. Ground Lead
6. Retaining Washer
7. Slow Jet - RH Side
8. Slow Jet - LH Side
9. O-Ring (Slow Jet) (2)
10. Fuel Bowl
11. O-Ring (Fuel Bowl - Upper)
12. O-Ring (Fuel Bowl - Lower)
13. Drain Screw
14. Bowl Screw (4)
15. Fuel Solenoid
16. Sealing Washer
17. Float
18. Pin
19. Screw
20. Float Clip
21. Float Valve/Inlet Needle
22. Main Nozzle - Right Side
23. Main Nozzle - Left Side
24. Main Jet - Right Side
25. Main Jet - Left Side
26. Choke Dust Cap
27. Choke Shaft
28. Spring
29. Bushing
30. Choke Lever
31. Choke Plate
32. Choke Plate Screw (2)

Figure 5-38. Keihin BK Two-Barrel Carburetor - Exploded View.

Governor

General

The governor is designed to hold the engine speed constant under changing load conditions. Most engines are equipped with a centrifugal flyweight mechanical governor. Some engines utilize an optional electronic governor, which is shown and covered on page 5.23. The governor gear/flyweight mechanism of the mechanical governor is mounted inside the crankcase and is driven off the gear on the camshaft. This governor design works as follows:

- Centrifugal force acting on the rotating governor gear assembly causes the flyweights to move outward as speed increases. Governor spring tension moves them inward as speed decreases.

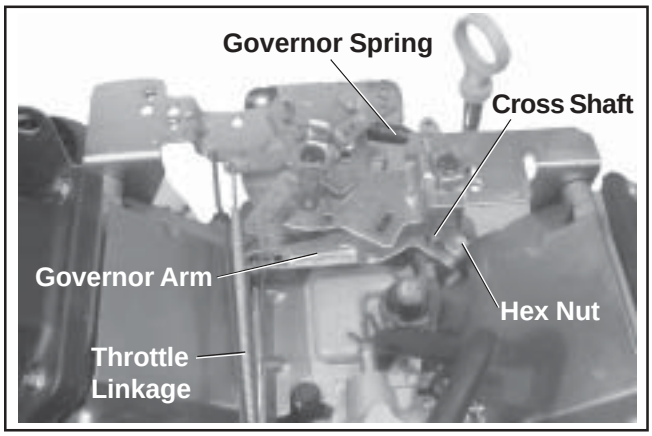

Figure 5-39. Governor Linkage.

- As the flyweights move outward, they cause the regulating pin to move outward.

- The regulating pin contacts the tab on the cross shaft causing the shaft to rotate.

- One end of the cross shaft protrudes through the crankcase. The rotating action of the cross shaft is transmitted to the throttle lever of the carburetor through the external throttle linkage. See Figure 5-39.

- When the engine is at rest, and the throttle is in the "fast" position, the tension of the governor spring holds the throttle plate open. When the engine is operating, the governor gear assembly is rotating. The force applied by the regulating pin against the cross shaft tends to close the throttle plate. The governor spring tension and the force applied by the regulating pin balance each other during operation, to maintain engine speed.

- When load is applied and the engine speed and governor gear speed decreases, the governor spring tension moves the governor arm to open the throttle plate wider. This allows more fuel into the engine, increasing the engine speed. As the speed reaches the governed setting, the governor spring tension and the force applied by the regulating pin will again offset each other to hold a steady engine speed.

Adjustments

NOTE: Do not tamper with the governor setting. Overspeed is hazardous and could cause personal injury.

General

The governed speed setting is determined by the position of the throttle control. It can be variable or constant, depending on the engine application.

Initial Adjustment

NOTE: EFI engines require a special initial adjustment procedure, which is covered in subsection 5B. Refer to "Initial Governor Adjustment" in that section for setting the governor on EFI-equipped engines.

Procedure – Carburetor Equipped Engines

Make this adjustment whenever the governor arm is loosened or removed from the cross shaft. See Figure 5-39 and adjust as follows:

1. Make sure the throttle linkage is connected to the governor arm and the throttle lever on the carburetor.

2. Loosen the hex nut holding the governor lever to the cross shaft.

3. Move the governor lever **toward** the carburetor as far as it will move (wide open throttle) and hold in this position.

4. Insert a nail into the hole on the cross shaft and rotate the shaft **counterclockwise** as far as it will turn, then tighten hex nut securely.

Sensitivity Adjustment

Governor sensitivity is adjusted by repositioning the governor spring in the holes of the governor lever. If speed surging occurs with a change in engine load, the governor is set too sensitive. If a big drop in speed occurs when normal load is applied, the governor should be set for greater sensitivity. See Figure 5-40 and adjust as follows:

1. To increase the sensitivity, move the spring closer to the governor cross shaft.

2. To decrease the sensitivity, move the spring away from the governor cross shaft.

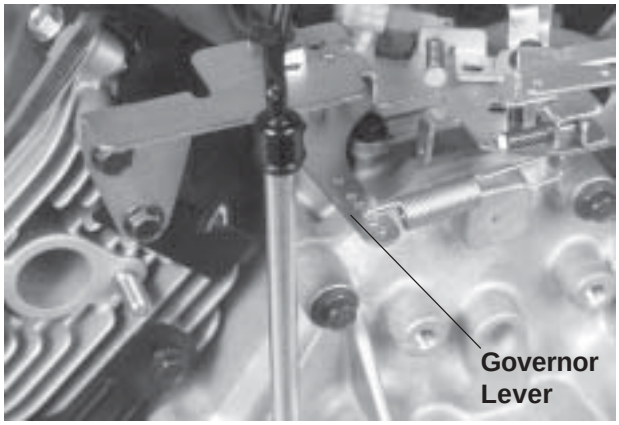

Figure 5-40. Governor Sensitivity Adjustments.

High Speed (RPM) Adjustment (Refer to Figure 5-41.)

1. With the engine running, move the throttle control to fast. Use a tachometer to check the RPM speed.

2. Loosen the lock nut on high speed adjusting screw. Turn the screw outward to decrease, or inward to increase the RPM speed. Check RPM with a tachometer.

3. When the desired RPM speed is obtained, retighten the lock nut.

NOTE: When the throttle and choke control cables are routed side-by-side, especially under a single clamp, there must be a small gap between the cables to prevent internal binding. After the high-speed setting has been completed, check that there is a gap of at least **0.5 mm (0.020 in.)** between the control cables.

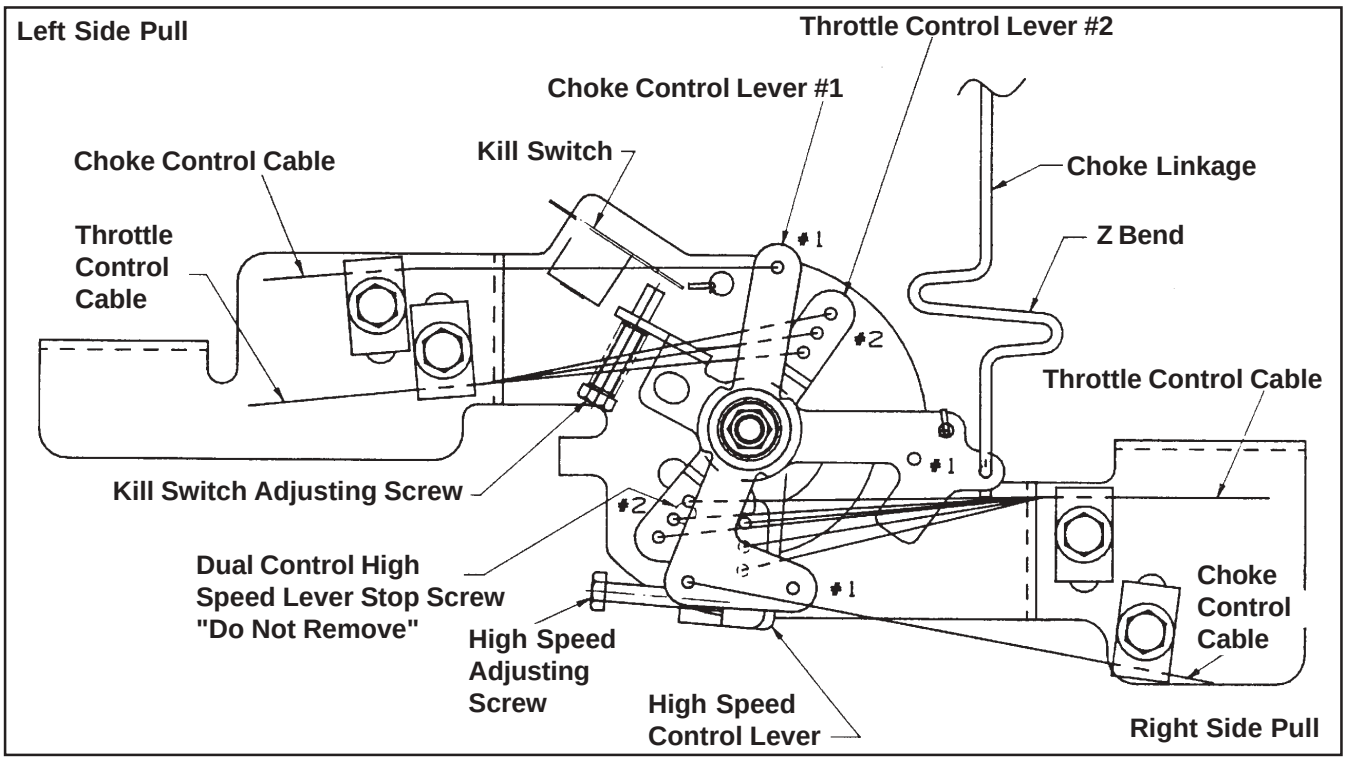

Figure 5-41. Governor Control Connections.

Electronic Governor

General

The electronic governor regulates engine speed at varying loads. It consists of a governor control unit, digital linear actuator and linkage.

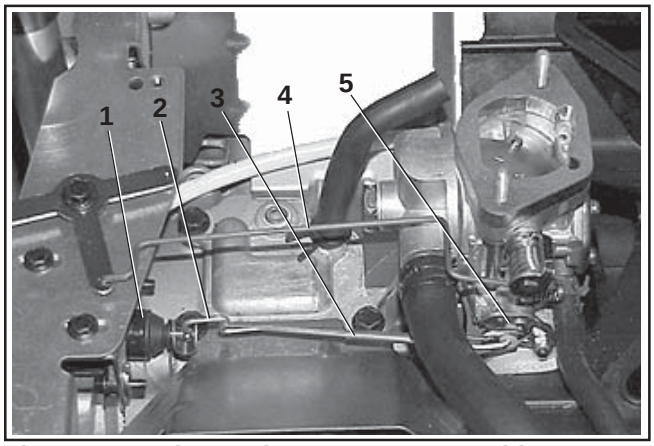

Figure 5-42. Electronic Governor Assembly.

1. Digital Linear Actuator
2. Throttle Linkage
3. Linkage Spring
4. Choke Linkage
5. Throttle Lever Adapter

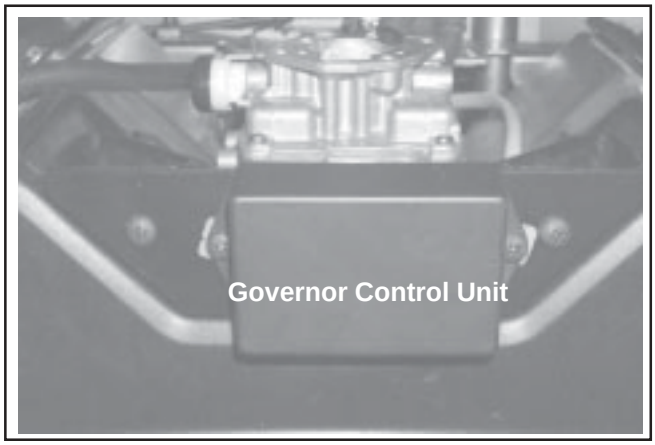

Figure 5-43. Electronic Governor Assembly.

Digital Linear Actuator (DLA)

Energizing the bi-directional digital linear actuator coils in the proper sequence, causes the threaded shaft to move out of, or back into the rotor, in precise linear increments. When power is removed, the actuator shaft remains in position. The DLA must initialize (fully extend) to move the throttle plate to the closed position, and partially open for starting. Correct adjustment of the DLA is critical to achieve the full range of throttle plate movement. See Adjustment Procedure.

Governor Control Unit (GCU) senses engine speed by pulse voltage inputs from the ignition modules. The GCU regulates the engine speed by variable input voltage from a customer-supplied potentiometer or a single pole, single throw (SPST) switch.

Potentiometer Specifications:

Wiper Voltage	Engine Speed (RPM)
0-1	1860 low speed endpoint
1-9	variable speed endpoint
9-16	3600 high speed endpoint

SPST Switch Specifications:

Switch Position	Engine Speed (RPM)
Open	1860 low speed endpoint
Closed	3600 high speed endpoint

5

GCU Safety Features

In the event of an engine overspeed condition, the GCU will shut down the engine by grounding the ignition modules.

The GCU will shut down the engine by grounding the ignition when power to the GCU is lost.

Linkage

The throttle linkage spring will fully open the throttle plate if the linkage becomes detached from the DLA. This will create an overspeed condition causing the engine to shut down. The DLA shaft will have to be manually screwed back into the body, and then retracted before reassembling the linkage.

Adjustment Procedure

The DLA must be in the fully retracted position during assembly. The full range of throttle plate movement will not be achieved if the DLA is partially extended when assembled. Loosen the two DLA mounting plate screws located on the top of the actuator plate. With the throttle linkage centered in the U-Clip at the end of the DLA shaft, slide the DLA bracket assembly back until the throttle plate is fully open. Torque the mounting plate screws to **2.5 N·m (22 in. lb.)**.

Troubleshooting Procedure

Engine starts, but will not continue to run

1. Check the linkage connection between the DLA and throttle plate.
2. Verify the DLA initializes when power is supplied (key switch in the start or run position).
3. Test the potentiometer wiper output voltage (if equipped).
4. Test the SPST switch (if equipped).
5. Check the wire harness and connections.

Engine does not run at the expected speed

1. Check to see that the throttle linkage and DLA have full range of motion having no mechanical interference.
2. Test the potentiometer wiper voltage (if equipped).
3. Test the SPST switch (if equipped).

Section 5A
LPG Fuel Systems

WARNING: Explosive Fuel!

LPG is extremely flammable, is heavier than air, and tends to settle in low areas where a spark or flame could ignite the gas. Do not start or operate this engine in a poorly ventilated area where leaking gas could accumulate and endanger the safety of persons in the area.

Proper service and repair of LPG fuel systems requires qualified technicians and special equipment. Many states require special licensing or certification for LPG repair shops and/or technicians. Check state and local regulations before attempting any adjustment, service, or repair of the LPG system or components. Faulty repairs by unqualified or underqualified personnel can have very serious ramifications. The information in this segment is for the exclusive use of qualified LPG service providers.

LPG Fuel System Components

The typical "liquid withdrawal" LPG fuel system consists of the following components:

- LPG Fuel Tank (Liquid Withdrawal)
- Electric Lock-Off/Filter Assembly
- Vaporizer
- LPG Regulator (Combination Primary/Secondary/Vacuum Lock-Off)
- LPG Carburetor
- High Pressure Fuel Line(s)
- Vacuum Line

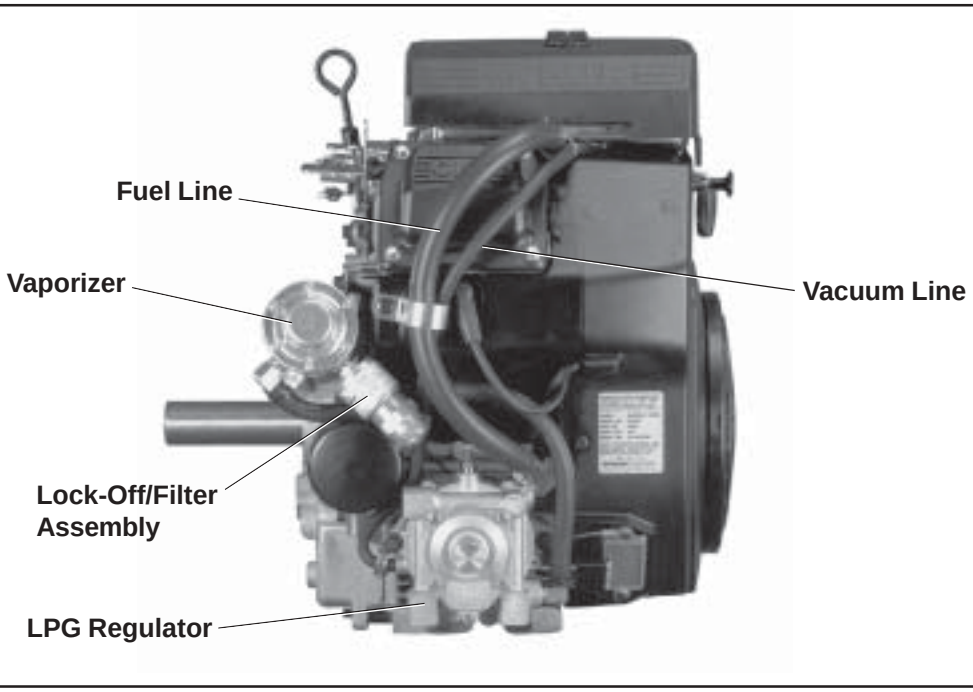

Figure 5A-1.

Operation

In a liquid withdrawal system, the Liquefied Petroleum Gas (LPG) is released from the bottom of the supply tank under high pressure. Upon opening the shut-off valve on the tank, liquid fuel travels out through the high pressure line to the electric lock-off/filter assembly. The lock-off opens internally when the key switch is turned **"on,"** permitting filtered fuel to flow to the vaporizer. The vaporizer is mounted in the flow of the discharged cooling air. It absorbs heat from the cooling air and transfers it to the fuel, changing the liquefied petroleum to a vapor or gaseous state, while partially stepping down the fuel pressure. The gas/vapor flows under this decreased pressure to the regulator where it is further reduced to a usable, regulated pressure. The regulator, activated by intake manifold vacuum, controls fuel flow to the carburetor. In the venturi of the carburetor, the fuel vapor is mixed with incoming air from the air cleaner in the correct ratio for efficient combustion.

Troubleshooting Checklist

If the engine starts hard, runs roughly, or stalls, check the following areas.

- Make sure the LPG fuel tank is filled and shut-off valve is fully opened.
- Make sure fuel is reaching the carburetor.
- Make sure the air cleaner element and precleaner are clean and all components are fastened securely.
- Make sure the ignition, governor, exhaust, throttle, and choke control systems are all operating properly.
- Check compression.

If engine continues to start hard, run roughly, or stall after these checks have been made, use the following troubleshooting guide.

Engine cranks but will not start

1. LPG fuel tank closed, low, or empty.
2. Lock-off not opening electrically, preventing fuel flow to vaporizer.
3. Fuel filter (located inside lock-off) dirty or blocked.
4. Insufficient vacuum signal, regulator not opening.
   a. Vacuum line between carburetor and regulator cracked, leaking, kinked, or pinched.
   b. Carburetor loose.
   c. Intake manifold loose or leaking.
   d. Excessive internal engine wear.
5. Faulty regulator.
   a. Primary valve not opening.
   b. Diaphragm spring adjustment incorrect.
   c. Idle adjustment screw incorrectly set.
   d. Vent(s) blocked/restricted.
6. Restricted/blocked fuel line.
7. Blocked carburetor fuel circuit.
8. Loose/leaking fuel enrichment hose (Impco carburetor system).

Hard starting, runs roughly, or stalls at idle speed

1. LPG fuel tank low.
2. Vacuum line between carburetor and regulator pinched, cracked, or leaking.
3. Carburetor idle speed set too low (should be at least 1200 RPM).
4. Carburetor idle circuit restricted.
5. Dirty/restricted air cleaner.
6. Dirty/restricted lock-off filter.
7. Frozen/malfunctioning regulator. Check/adjust primary pressure.
8. Excessive external load on engine.
9. Excessive internal wear.
10. Loose/leaking fuel enrichment hose (Impco carburetor system).

Irregular or inconsistent idle

1. Improper operation/adjustment of regulator, idle adjustment screw, throttle opening, and/or engine governor.
2. Secondary valve in regulator not closing. Readjust idle screw (couterclockwise) so valve can close fully against seat.
3. Loose/leaking vacuum line.
4. Loose carburetor mounting and/or line connections.
5. Damaged diaphragm(s) within regulator.
6. Debris in regulator. Flush debris from drain plug or remove regulator from system, disassemble body and remove debris.
7. Dirt or debris in carburetor. Remove carburetor, disassemble and clean/service as required. If venturi (Impco carburetor) removal is performed, mark its orientation to the carburetor body for proper reinstallation.
8. Loose/leaking fuel enrichment hose (Impco carburetor system).

Engine stalls during operation

1. No fuel.
2. Faulty lock-off or blocked filter.
3. Improper governor setting.
4. Damaged diaphragms within regulator.
5. Vacuum line leaking, loose, or pinched.
6. Restricted fuel line.
7. Loose/leaking fuel enrichment hose (Impco carburetor system).

Low power

1. Air cleaner or exhaust system dirty/restricted.
2. Low fuel.
3. Rich gas condition (flooding) through regulator.
   a. Dirty/restricted valves in regulator.
   b. Damaged primary diaphragm in regulator.
4. No fuel.
   a. Electric lock-off not opening, filter blocked, or restriction within fuel line.
   b. Leaking, loose, or cracked vacuum line from carburetor to regulator.
   c. Leaking, or loose intake system components.
   d. Regulator primary valve not opening.
   e. Secondary, or vacuum lock-off diaphragm within regulator leaking.
   f. Low pressure rubber hose kinked.
   g. Frozen regulator.
5. Improper ignition timing.
6. Loose/incorrect throttle lever/clamp bracket positioning.
7. Loose or incorrectly positioned high speed throttle plate stop.

Engine runs lean

1. Electrical problem causing intermittent lock-off operation, or lock-off is faulty.
2. Filter in lock-off dirty or restricted.
3. Restriction in fuel system.
4. Idle holes plugged; dirt in fuel delivery channels.
5. Carburetor fuel circuit restriction.
6. Loose/leaking fuel enrichment hose (Impco carburetor system).

High fuel consumption

1. Fuel leak. Check lines, connections, and system components for leaks with soapy water. Fix any leaks immediately.
2. Incorrectly set regulator, or leakage from valves in regulator. Readjust, service, or replace regulator as required.
3. Dirty air cleaner or precleaner.
4. Choke plate in carburetor not opening completely.

LPG Carburetor Adjustments

General

The LPG carburetor and regulator are designed to deliver the correct fuel-to-air mixture to the engine under all operating conditions. The high and low idle fuel mixture settings are preset at the factory, and cannot be adjusted. These engines are equipped with an Impco or Nikki carburetor. See Figure 5A-2 and 5A-3. Although both carburetors function similarly, each is unique and should not be interchanged.

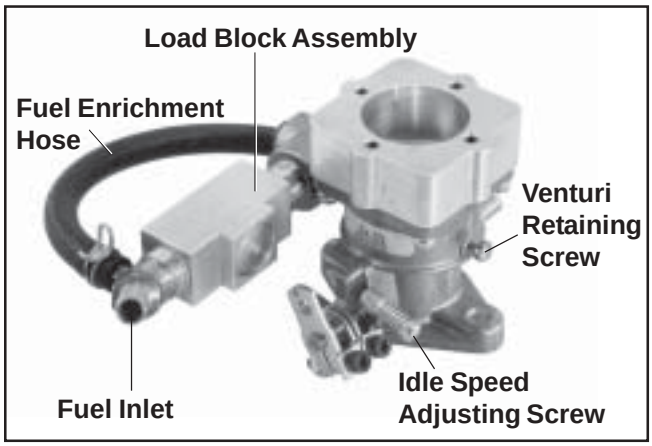

Figure 5A-2. Impco Carburetor.

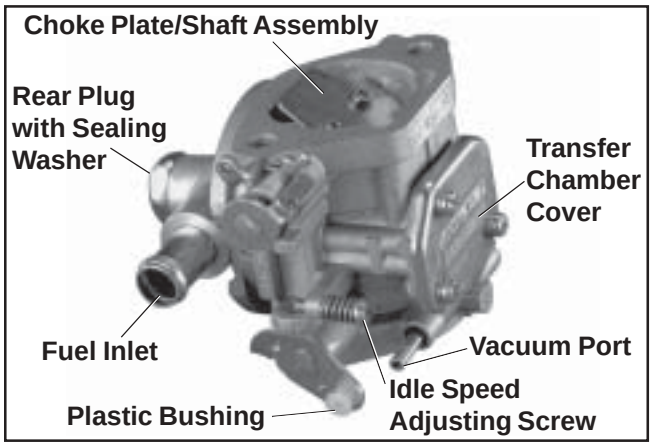

Figure 5A-3. Nikki Carburetor.

Impco carburetors also incorporate the use of an external ''Load Block'' assembly, which controls the final fuel flow to the carburetor for all throttle positions except idle. See Figure 5A-2. Calibrated and flow-matched to the carburetor, it functions similarly to preset fuel mixture settings in other carburetors. The load block assembly is not available separately, nor is any internal servicing permitted or possible. If a problem is encountered and determined to be caused by the load block, the carburetor should be replaced.

High Altitude Operation

The standard carburetor calibrations will provide proper operation up to altitudes of **1500 m (5000 ft.)**. No internal changes are necessary or available for either carburetor.

NOTE: Carburetor adjustments should be made only after the engine has warmed up.

Idle Speed Adjustment

1. Start the engine and run at half throttle for 5 to 10 minutes. Check that the throttle and choke (Nikki carburetor) plates can open fully.

2. Place the throttle control into the **"idle"** or **"slow"** position. Turn the low idle speed adjusting screw (See Figure 5A-2 or 5A-3) in or out, to obtain a low idle speed of **1200 RPM (± 75 RPM),** or set to application specifications. Check the speed using a tachometer.

NOTE: The actual low idle speed (RPM) depends on the application. Refer to the equipment manufacturer's recommendations. The low idle speed for basic engines is **1200 RPM**.

LPG Fuel System Component Service

LPG Carburetor - Cleaning

The carburetor may be cleaned if necessary. Removal from the engine and limited disassembly will aid in cleaning.

NOTE: **Impco Carburetor:** Do not loosen or alter the mounted position of the clamping brackets and/or stop collar on the throttle shaft. Each is preset, in correlation to a specific position of the throttle plate (shaft), or acts as a stop. None of these attached components, including the throttle plate or shaft, requires disassembly or removal for any carburetor servicing. All the components on the throttle shaft should be left intact. If the settings of any one of these is inadvertently loosened or altered, each must be checked/reset, or performance and operation will be affected. Refer to the procedure included in the reassembly/installation sequence to check or reset.

Impco Carburetor

1. Turn off fuel supply at tank.

2. Remove the air cleaner, breather hose, fuel line, vacuum hose, choke, and throttle linkages. Remove the mounting hardware, carburetor, and gaskets from the engine. Discard the gaskets.

3. The carburetor venturi may be removed for inspection and appropriate cleaning.

   a. Remove the four screws securing the air cleaner adapter and gasket to the carburetor. See Figure 5A-4.

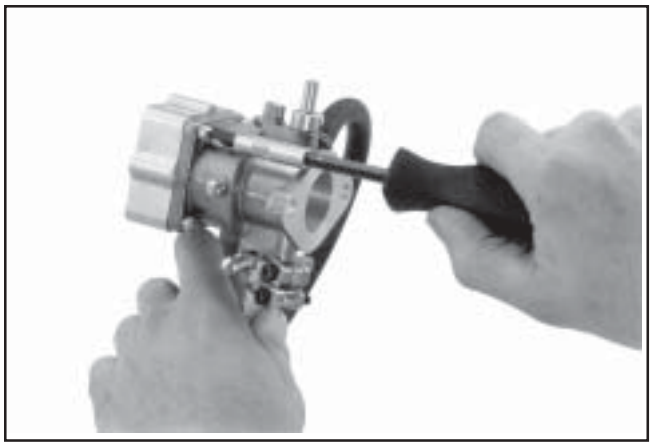

Figure 5A-4.

   b. **Important:** Mark a small line on the outer edge of the venturi for proper orientation and reinstallation later.

   c. Loosen the venturi retaining screw on the side of the carburetor body and lift out the venturi. See Figure 5A-5.

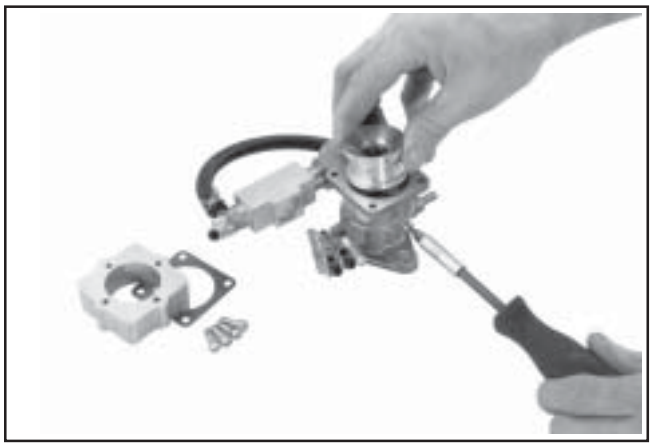

Figure 5A-5.

4. Inspect the overall condition of the fuel enrichment hose attached to the carburetor. It must be free of cracks, deterioration, and damage. Disconnect the fuel enrichment hose from the carburetor fittings to clean or check condition as required. See Figure 5A-6. Replace with a new Kohler high pressure hose (LP rated) if the condition is questionable in any way. Secure new hose using new clamps.

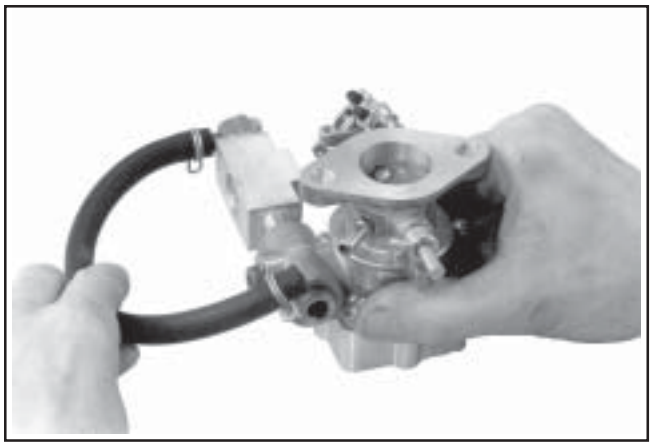

Figure 5A-6.

5. Clean all parts as required, use a good carburetor cleaner, following the manufacturer's instructions. Blow clean, compressed air through all the passages. **Do not** poke or probe into the load block assembly as damage can be done, resulting in serious operational problems. See Figure 5A-7.

Figure 5A-7.

Nikki Carburetor

1. Turn off fuel supply at tank.

2. Remove the air cleaner, breather hose, fuel line, vacuum hose, choke, and throttle linkages. Remove the nuts, carburetor, and gaskets from the engine. Discard the gaskets.

3. Remove the fuel transfer chamber cover by removing the three screws. See Figure 5A-3. Carefully remove the cover and gasket. Discard the gasket.

4. The main jet is fixed and nonadjustable, but may be accessed for cleaning by removing the rear plug and sealing washer. Discard the washer.

5. In order to clean the off-idle transfer passages and carburetor thoroughly, use a good carburetor cleaner and follow the manufacturer's instructions. Blow clean, compressed air through the passages and make sure all are open before reassembling. **Do not** use wire or metal objects to clean passages or carburetor body.

LPG Carburetor - Inspection

1. Inspect the carburetor body and removable venturi (Impco carburetor) for cracks, holes, and other wear or damage.

2. Check the choke shaft (Nikki carburetor only) and the throttle shaft for wear and free movement.

   NOTE: **Do not** attempt to disassemble or remove either shaft from the carburetor body, including the mounted clamp brackets on Impco style carburetors. The screws, attaching the choke and throttle plate to their respective shafts are staked or bonded to prevent loosening. The plate(s) and shaft(s) are not available separately. If detrimental wear or damage is found in any of the parts, the carburetor should be replaced.

LPG Carburetor - Reassembly

Impco Carburetor

1. Slide the venturi into the carburetor body, aligning the position mark made prior to removal. Correctly installed, the discharge holes should not be visible from the top.

2. Secure with the venturi retaining screw. Torque the screw to **4.0 N·m (36 in. lb.)**.

3. Install a new adapter gasket and mount the air cleaner adapter onto the carburetor with the four screws. Torque the screws to **4.0 N·m (36 in. lb.)**.

4. Install a new carburetor gasket onto the intake manifold adapter, followed by the carburetor. Install and finger tighten the mounting fasteners.

5. Connect the ''Z'' end of the throttle linkage and the dampening spring to the throttle clamp bracket on the throttle shaft. Attach the opposite end of linkage and spring to the governor lever.

   NOTE: The clamp brackets and stop collar mounted on the throttle shaft should still be in their original positions (See Figure 5A-2), and not require any readjustment/ resetting. Continue with steps 6 and 7. If the mounted position of any one of these was affected or changed, it will be necessary to check and reset the position of each before proceeding. Follow the complete instructions listed after step 7, then continue with steps 6 and 7.

6. Manually move the governor lever toward the carburetor as far as it will go.

7. Check that the throttle plate is now fully open or reposition the carburetor slightly on the mounting screws so it is fully open. Torque the mounting screws to **9.9 N·m (88 in. lb.)**.

Instructions for Checking/Positioning the Clamp Brackets Mounted on the Throttle Shaft

Use only if the position or mounting of the clamp bracket(s) has been disturbed. Figures show the carburetor removed from the engine for clarity.

Idle Speed Clamp Bracket Position

1. Counting the number of turns, back the idle speed adjustment screw off (counterclockwise), so only 1 to 1 1/2 of the threads are visible. See Figure 5A-8.

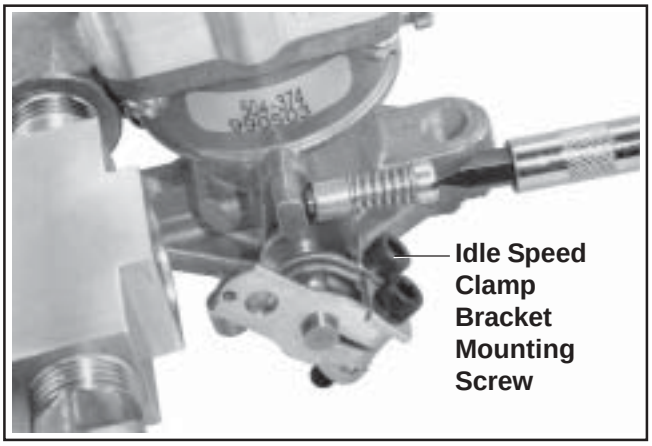

Figure 5A-8. Backing Off Idle Speed Screw.

2. Loosen the clamp bracket mounting screw, and pivot the throttle shaft to fully close the throttle plate. See Figure 5A-9.

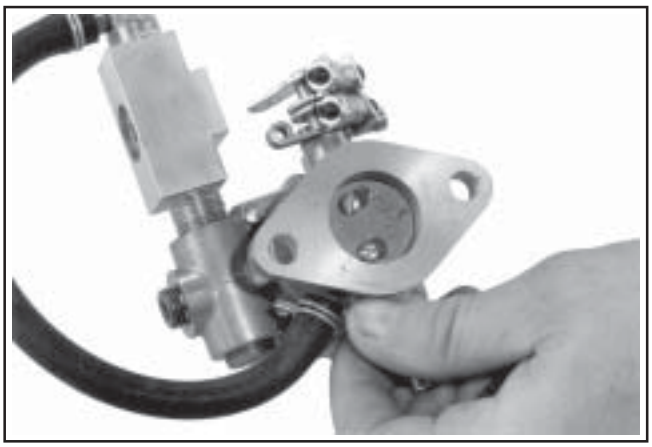

Figure 5A-9. Closing Throttle Plate.

3. Hold the throttle plate closed and rotate the clamp bracket until the end of the screw contacts the stop. Insert a 0.025 mm (0.001 in.) feeler gauge between the carburetor housing and the side of the clamp bracket to set the endplay, then tighten the mounting screw securely. See Figure 5A-10.

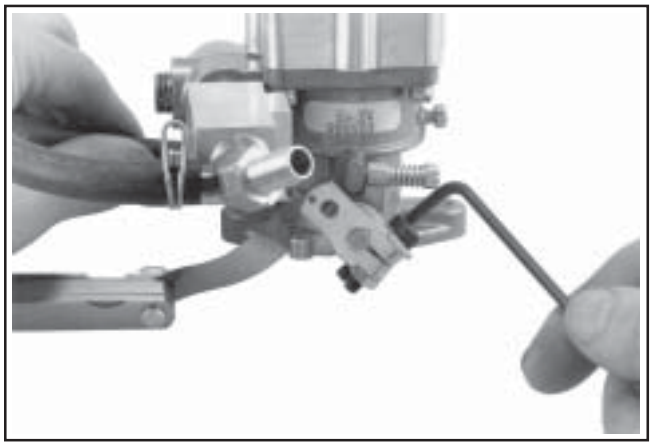

Figure 5A-10. Tightening Idle Speed Clamp Mounting Screw.

4. Reset the idle speed adjustment screw back to the original position.

High Speed/Stop Collar Position

1. Make sure the idle speed clamp position has already been checked or properly set.

2. Rotate and hold the throttle shaft so the throttle plate is fully open/perfectly vertical. See Figure 5A-11.

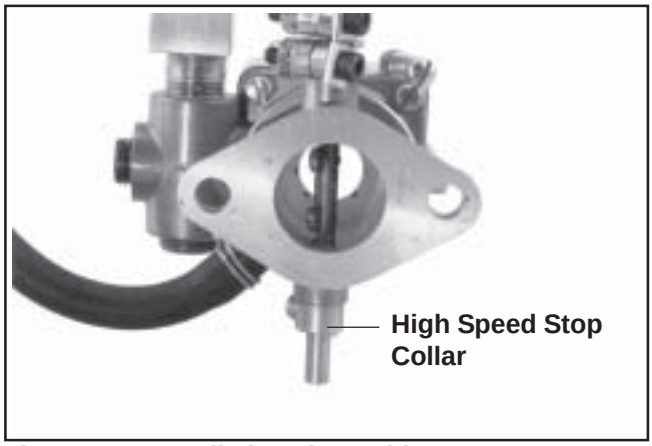

Figure 5A-11. Full Throttle Position.

3. Insert a 0.025 mm (0.001 in.) feeler gauge between the side of the stop collar and the carburetor housing, then check or set the position of the stop collar. The head of the mounting screw **must** be in contact with the carburetor boss from the back (hose/fitting) side, preventing any further rotation over center. Set or adjust the stop collar as required. See Figure 5A-12.

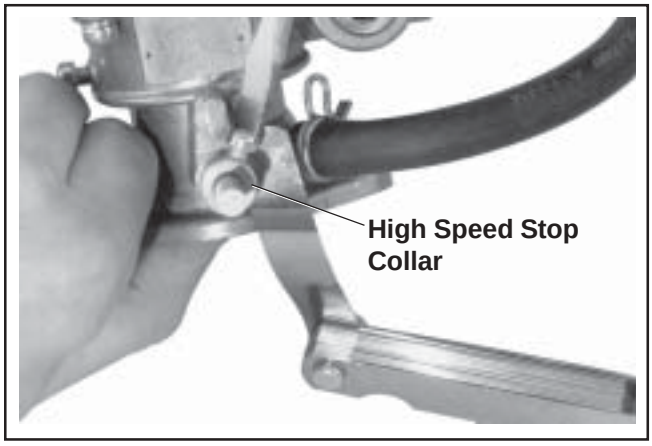

Figure 5A-12. Adjusting/Setting Stop Collar.

4. Tighten the screw securely.

NOTE: After the idle speed clamp bracket and the high speed stop collar positions have been set, check that the throttle shaft pivots freely without binding or restriction.

Throttle Linkage Clamp Bracket Position

Carburetor must be assembled to engine with linkage attached to set this position.

1. The throttle linkage clamp bracket should be positioned as shown in Figure 5A-13 on the idle speed clamp bracket side of the throttle shaft.

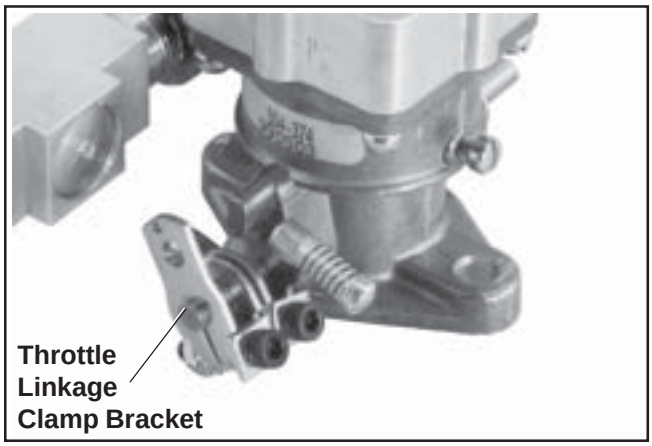

Figure 5A-13. Throttle Linkage Clamp Bracket Position.

2. Manually move the governor lever, with the throttle linkage connected, toward the carburetor as far as it will go. Hold it in this position.

3. Looking down the throat of the carburetor, check that the throttle plate is in the full throttle position and that the head of the high speed collar stop screw is in contact with the carburetor boss. If not, loosen the carburetor mounting screws and reposition the carburetor slightly. Torque the carburetor mounting screws to **9.9 N·m (88 in. lb.)**.

   NOTE: If additional adjustment is required, loosen the throttle linkage clamp bracket mounting screw, set the throttle shaft to the full throttle position against the head of the stop screw, and retighten the clamp mounting screw securely. See Figure 5A-14.

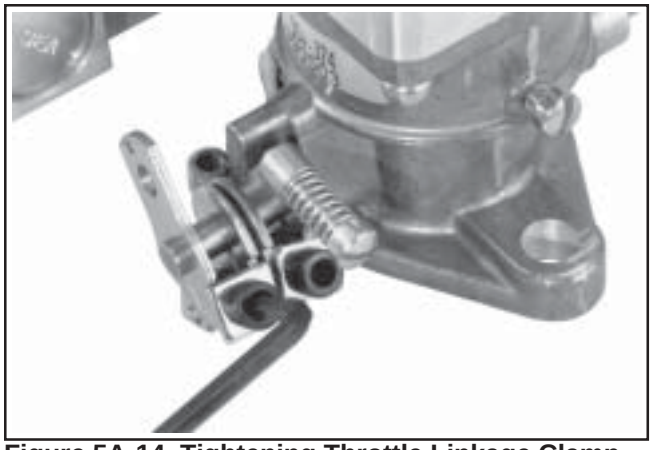

Figure 5A-14. Tightening Throttle Linkage Clamp Bracket.

Nikki Carburetor

1. Reinstall the rear plug with a new sealing washer. Tighten the plug securely.

2. Reinstall fuel transfer chamber cover with a new gasket. Secure with the three screws.

3. Install new carburetor mounting gasket on manifold studs, followed by the carburetor and new air cleaner base gasket.

4. Reconnect the throttle and choke linkages, and the fuel and vacuum lines.

5. Reinstall the air cleaner base and breather tube. Secure base with two mounting nuts. Torque nuts to **9.9 N·m (88 in. lb.)**. Install the rest of the air cleaner system.

6. Check to be sure all system connections are tight.

7. Reset idle RPM and recheck high idle (governed speed) after starting and allowing sufficient warm-up time.

Electric Lock-Off/Filter Assembly - Functional Test

The electric lock-off can be easily tested to verify that it is functional. Remove it from the system for testing. Using a 12 volt power supply or battery, connect one wire lead to the positive (+) lead of power supply, and touch remaining wire lead to negative (-) lead of power supply. When connection is made, an audible "click" should be heard indicating the opening of the lock-off. While energized, blow compressed air through it to determine if it is blocked or restricted.

Figure 5A-15.

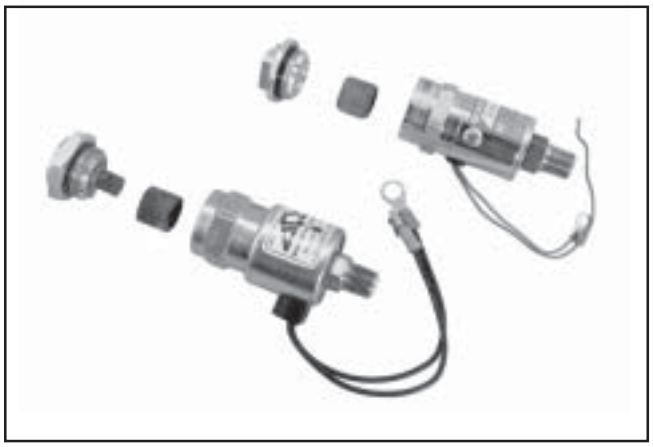

Figure 5A-16.

Electric Lock-Off/Filter Assembly - Filter Service

The filter inside the lock-off assembly should be replaced **every 500 hours** of operation, or if it becomes blocked or restricted. Cleaning of the filter element is not recommended. Order a replacement filter element by the appropriate Kohler part number.

Vaporizer Assembly

The outer surface of the vaporizer should be kept free of dirt and debris accumulation, which will cause a loss of vaporization efficiency. Visual inspection and necessary cleaning should be performed on a regular basis, more frequently under dusty or dirty conditions. The vaporizer should be disassembled, cleaned, and serviced using a rebuild kit **every 1500 hours** or if a problem is encountered.

Figure 5A-17.

LPG Regulator

The regulator controls both the pressure and flow of fuel within the LP system. It is comprised of both a primary and secondary chamber, which are dependent upon one another. Two different styles of regulators are used, based upon the system involved. The Impco (Beam) regulator is shown in Figure 5A-18, and the Nikki regulator is shown in Figure 5A-19. Although the basic design and operating principles are similar, due to system differences the regulators should not be interchanged.

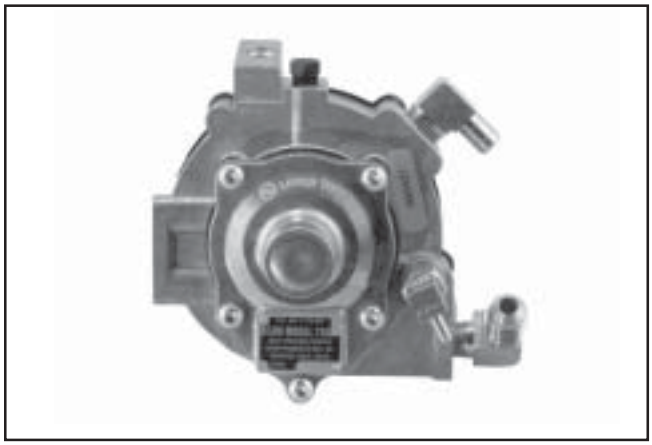

Figure 5A-18. Impco (Beam) Regulator.

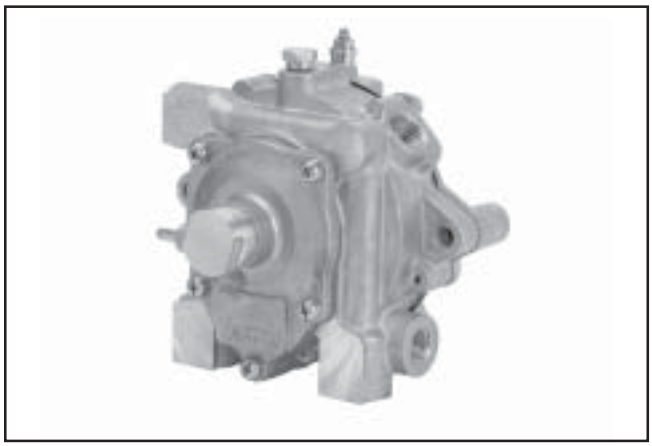

Figure 5A-19. Nikki Regulator.

Following are separate sections covering the theory of operation and general service information for each style of regulator. Detailed service/repair instructions are included in the rebuild kit for each regulator.

Impco (Beam) Regulator (See Figure 5A-20)
LPG vapor enters at point **(A)**, then passes into primary area **(B)** at point **(28)**, where pressure is reduced from up to 250 psi at the tank to 4.5 psi in area **(B)**. Fuel pressure against diaphragm **(2)** overcomes spring **(3)** and as movement increases, spring **(5)** will close lever **(6)**. The primary diaphragm breather (not shown in drawing) is vented to secondary chamber so that rupture of this diaphragm would direct fuel into the carburetor.

Fuel now moves through passage **(E)**, past secondary valve **(25)** into secondary area **(C)**. As negative pressure (vacuum) is created at the carburetor venturi and is transmitted through the dry-gas hose to chamber **(C)** secondary diaphragm **(12)** is drawn down and contacts the secondary lever **(16)**. Fuel will flow in proportion to air velocity through the carburetor venturi, ensuring an ideal mixture at all engine speeds.

Whenever the engine is operating, the vacuum diaphragm **(10)** is down against the floor **(H)** and the spring **(11)** is compressed. The idle and starting adjustment is made with a tamper-resistant screw **(17)** which regulates the whisker wire system (not shown), opening up the secondary orifice slightly (but only when the vacuum diaphragm is drawn down). Very little vacuum is needed to start this vacuum diaphragm travel: 0.2 in. Mercury to start and 0.5 in. Mercury for full travel. The instant the engine stops rotating, loss of vacuum in section **(D)** releases diaphragm **(10)** causing bumper **(K)** to push against secondary lever **(16)**, overcoming action of whisker wire and ensuring 100% lock-off.

This patented Beam design will lock off primary pressures up to five times in excess of normal and permits starting without priming or choking.

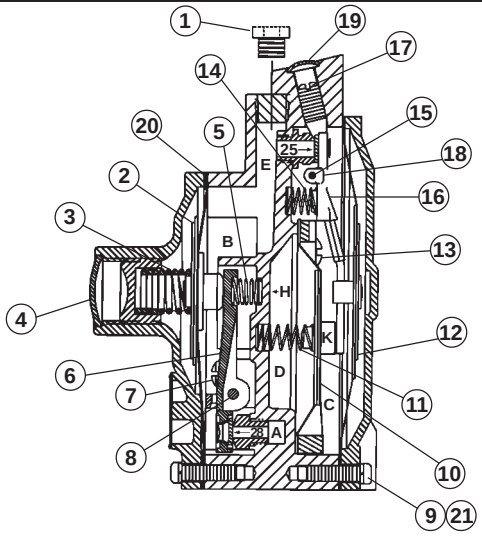

1. 1/8-27 NPT Plug
2. Primary Diaphragm Assembly
3. Primary Spring
4. Expansion Plug
5. Secondary Diaphragm Spring
6. Primary Lever Assembly
7. Fillister Head Screw
8. Primary Pivot Pin
9. Torx Head Screw
10. Vac Lock Diaphragm Assembly
11. Vac Lock Spring
12. Secondary Diaphragm
13. Pan Head Screw
14. Secondary Lever Spring
15. Secondary Pivot Pin
16. Secondary Lever Assembly
17. Adjustment Screw
18. Pan Head Screw
19. Expansion Plug
20. Diaphragm Gasket
21. Split Lock Washer

Figure 5A-20.

Nikki Regulator Primary Chamber (See Figure 5A-21)

The primary chamber reduces the high pressure fuel flow from the tank and vaporizer down to approximately 4 psi. Fuel flowing from the vaporizer enters the inlet of the regulator under approximately **76 kPa (11 psi)** of pressure. There it is delivered to the primary chamber **(3)** through the clearance between the primary valve **(1)** and valve seat **(2)**. As fuel continues to flow and the primary chamber approaches **29 kPa (4 psi)**, the primary diaphragm **(4)** overcomes the tension of the diaphragm spring **(5)**. As the diaphragm **(4)** and contact button **(6)** move up, the primary lever spring **(8)** pushes the primary lever **(7)** up, in turn closing the primary valve **(1)** and stopping the flow of fuel. As fuel is consumed and the pressure in the primary chamber drops below **29 kPa (4 psi)**, the diaphragm spring **(5)** tension will be greater than the fuel pressure, causing the primary diaphragm **(4)** to be pushed down. This causes the contact button **(6)**, to push the primary lever **(7)** down, in turn opening the primary valve **(1)** and admitting more fuel. In this manner, the pressure within the primary chamber is maintained at a relatively constant **29 kPa (4 psi)**.

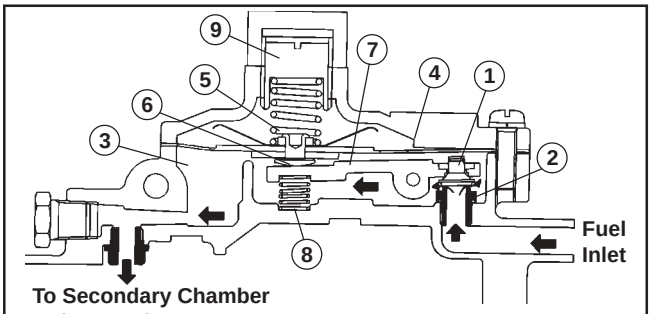

1. Primary Valve
2. Primary Valve Seat
3. Primary Chamber
4. Primary Diaphragm
5. Primary Diaphragm Spring Adjustment
6. Contact Button
7. Primary Valve Lever
8. Primary Lever Spring
9. Primary Pressure

Figure 5A-21. Primary Chamber.

Nikki Regulator Secondary Chamber (See Figure 5A-22)

The secondary chamber further reduces the fuel pressure from the **29 kPa (4 psi)** of the primary chamber to near **0 kPa (0 psi)** pressure, to prevent excessive fuel flow to the carburetor. Fuel enters the secondary chamber **(13)** through the clearance between the secondary valve **(11)** and the valve seat **(12)**. While the engine is operating, and fuel is being drawn from the secondary chamber, the secondary diaphragm **(14)** is raised by atmospheric pressure, simultaneously lifting the secondary valve lever **(16)**, opening the secondary valve **(11)**, allowing fuel to flow. When the engine is running at idle, there may not be enough vacuum created in the carburetor venturi to overcome the tension of the secondary diaphragm spring **(15)**, and the secondary diaphragm cannot open the valve. Under those conditions, the idle adjusting screw **(18)**, and balance spring **(19)** are used to apply just enough pressure on the diaphragm **(14)** to maintain sufficient fuel flow for idle operation.

The vacuum lock-off mechanism is located in the secondary chamber. When the engine is running, manifold vacuum above the diaphragm **(17)** draws it up, so the secondary valve can function normally. When the engine is stopped, manifold vacuum is terminated, and the diaphragm relaxes and pushes down on the secondary valve lever, preventing any fuel flow or leakage through the regulator.

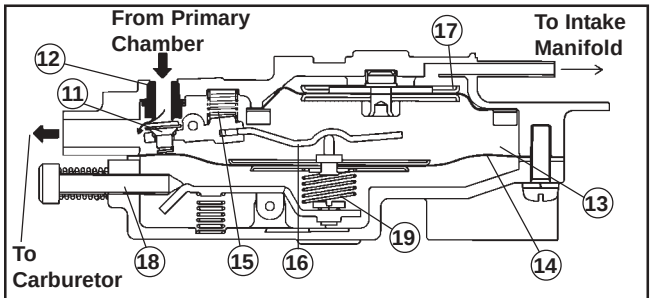

11. Secondary Valve
12. Secondary Valve Seat
13. Secondary Chamber
14. Secondary Diaphragm
15. Secondary Diaphragm Spring
16. Secondary Valve Lever
17. Vacuum Lock-Off Diaphragm
18. Idle Adjust Screw
19. Balance Spring

Figure 5A-22. Secondary Chamber.

Preventative Maintenance

The regulator is preset at the factory and generally requires no further adjustment. No periodic service is required. Over time, depending on fuel quality, operating environment, and system performance, fuel deposits can accumulate inside the regulator. Those regulators containing a drain plug (Nikki) should be drained every **500 hours** to remove any accumulated deposits. See Figure 5A-23.

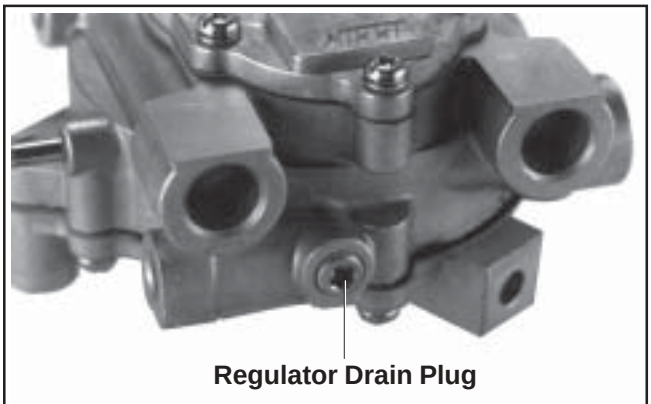

Figure 5A-23. Regulator Drain Plug (Some Models).

1. Turn supply valve off, run engine out of fuel, and turn off ignition switch.

2. Disconnect and ground the spark plug leads.

3. Remove the 1/8" pipe plug from bottom of regulator and drain any accumulated deposits. See Figure 5A-23.

4. Reinstall plug using pipe sealant with Teflon® (Loctite® 592 or equivalent) on threads and tighten securely. If required, a replacement plug is available as Kohler Part No. X-75-23-S.

Regulator Service

Every 1500 hours it is recommended that disassembly, cleaning, and resetting of the regulator be performed using the regulator rebuilding kit available. Specific instructions are included in the rebuilding kit. Perform the regulator service following the instructions provided. As all adjustments and settings must be reset using specific test equipment, this must be performed by qualified LP personnel only.

Impco (Beam) Regulator Service

Kohler repair kit 24 757 40-S should be used to service the regulator **every 1500 hours,** or whenever cleaning and servicing is required.

Nikki Regulator Service

Kohler repair kit 24 757 39-S should be used **every 1500 hours**.

Section 5B
Electronic Fuel Injection (EFI) Fuel System

Contents

Page(s)

Description

Initial Starting/Priming Procedure 5B.2
Fuel Recommendations 5B.2
EFI Fuel System Components 5B.3
Operation 5B.3
Important Service Notes 5B.4

Electrical Components

Electronic Control Unit (ECU) 5B.4-5B.5
Engine Speed Sensor 5B.5-5B.6
Throttle Position Sensor (TPS) and Initialization Procedures 5B.7-5B.10
Engine (Oil) Temperature Sensor 5B.10-5B.11
Oxygen Sensor 5B.11-5B.13
Electrical Relay 5B.13-5B.14
Fuel Injectors 5B.14-5B.17
Ignition System 5B.17-5B.18
Spark Plugs 5B.18
Wiring Harness 5B.18-5B.19
Battery Charging System 5B.19

Fuel Components

Fuel Pump 5B.19-5B.20
Fuel Pressure Regulator 5B.20-5B.22
Fuel Filter 5B.22
Fuel Rail 5B.22
Fuel Line 5B.22-5B.23
Throttle Body/Intake Manifold Assembly 5B.23
Idle Speed Adjustment (RPM) 5B.23-5B.24
Initial Governor Adjustment 5B.24-5B.26

Troubleshooting

Troubleshooting Guide 5B.26
Electrical System 5B.27-5B.33
Fuel System 5B.34
Fault Codes 5B.34-5B.42
Troubleshooting Flow Chart 5B.42-5B.43
Flow Chart Diagnostic Aids 5B.44-5B.45
EFI Service Tools ..... Refer to Section 2

Description

WARNING

Explosive Fuel can cause fires and severe burns.

Fuel system ALWAYS remains under HIGH PRESSURE.

WARNING: Explosive Fuel!

Gasoline is extremely flammable and its vapors can explode if ignited. Store gasoline only in approved containers, in well ventilated, unoccupied buildings, away from sparks or flames. Do not fill the fuel tank while the engine is hot or running, since spilled fuel could ignite if it comes in contact with hot parts or sparks from ignition. Do not start the engine near spilled fuel. Never use gasoline as a cleaning agent.

The EFI fuel system remains under high pressure, even when the engine is stopped. Before attempting to service any part of the fuel system, the pressure must be relieved. Pressure Tester, (part of EFI Service Kit, see Section 2) has an integral relief valve. Connect the black tester hose to the test valve in the fuel rail. Route the clear hose into a portable gasoline container. Depress the button on the tester relief valve.

Initial Starting/Priming Procedure

Important: The EFI fuel system must be purged of air (primed) prior to the initial start up, and/or any time the system has been disassembled or the fuel tank run dry.

1. Locate the electronic control unit (ECU) for the EFI system. Check the part number on the end. If the Part No. is **24 584 28** or higher, the ECU has a built-in priming feature.

   a. Turn the key switch to the "on/run" position. You will hear the fuel pump cycle on and off. When the fuel pump stops cycling (approximately one minute), the system is primed; start the engine.

2. For plastic-cased ECU's below 24 584 28-S, the system can be primed by manually cycling the fuel pump.

   a. Turn the key switch to the "on/run" position. The fuel pump will run for about three seconds and stop. Turn the switch off and back on to restart the fuel pump. Repeat this procedure until the fuel pump has cycled five times, then start the engine.

3. The system can also be primed similar to relieving pressure.

   a. Connect the pressure gauge as described above for relieving fuel pressure. Depress and hold the release button and crank the engine until the air is purged and fuel is visible in the discharge tube. If fuel is not visible after 10 seconds, stop cranking and allow the starter to cool for 60 seconds.

Priming Without a Test Valve in Fuel Rail:

1. Crank the engine in 10-15 second intervals, allowing a 60 second cool-down period between cranking intervals, until the engine starts.

NOTE: The number of cranking intervals necessary will depend on the individual system design, and/or where the system has been disassembled.

Fuel Recommendations

General Recommendations

Purchase gasoline in small quantities and store in clean, approved containers. An approved container with a capacity of 2 gallons or less with a pouring spout is recommended. Such a container is easier to handle and helps prevent spillage during refueling.

- Do not use gasoline left over from the previous season, to minimize gum deposits in your fuel system, and to ensure easy starting.
- Do not add oil to the gasoline.
- Do not overfill the fuel tank. Leave room for the fuel to expand.

Fuel Type

Do not use leaded gasoline, as component damage will result. Any costs/damages incurred as a result of using leaded fuel will not be warranted. Use only clean, fresh, unleaded gasoline with a pump sticker octane rating of 87 or higher. In countries using the Research method, it should be 90 octane minimum.

Gasoline/Alcohol blends

Gasohol (up to 10% ethyl alcohol, 90% unleaded gasoline by volume) is approved as a fuel for Kohler EFI engines. Other gasoline/alcohol blends are not approved.

Gasoline/Ether blends

Methyl Tertiary Butyl Ether (MTBE) and unleaded gasoline blends (up to a maximum of 15% MTBE by volume) are approved as a fuel for Kohler EFI engines. Other gasoline/ether blends are not approved.

EFI Fuel System Components

General

The Electronic Fuel Injection (EFI) system is a complete engine fuel and ignition management design. The system includes the following principal components:

- Fuel Pump
- Fuel Filter
- Fuel Rail
- Fuel Line(s)
- Fuel Pressure Regulator
- Fuel Injectors
- Throttle Body/Intake Manifold
- Engine Control Unit (ECU)
- Ignition Coils
- Engine (Oil) Temperature Sensor
- Throttle Position Sensor (TPS)
- Speed Sensor
- Oxygen Sensor
- Wire Harness Assembly & Affiliated Wiring,
- Malfunction Indicator Light (MIL)

Operation

The EFI system is designed to provide peak engine performance with optimum fuel efficiency and lowest possible emissions. The ignition and injection functions are electronically controlled, monitored and continually corrected during operation to maintain the theoretical ideal or "stoichiometric" air/fuel ratio of 14.7:1.

The central component of the system is the Motronic™ Engine Control Unit (ECU) which manages system operation, determining the best combination of fuel mixture and ignition timing for the current operating conditions.

An electric fuel pump is used to move fuel from the tank through the fuel line and in-line fuel filter. A fuel pressure regulator maintains a system operating pressure of 39 psi and returns any excess fuel to the tank. At the engine, fuel is fed through the fuel rail and into the injectors, which inject it into the intake ports.

The ECU controls the amount of fuel by varying the length of time that the injectors are "on." This can range from 1.5-8.0 milliseconds depending on fuel requirements. The controlled injection of the fuel occurs each crankshaft revolution, or twice for each 4-stroke cycle. One-half the total amount of fuel needed for one firing of a cylinder is injected during each injection. When the intake valve opens, the fuel/air mixture is drawn into the combustion chamber, ignited, and burned.

The ECU controls the amount of fuel injected and the ignition timing by monitoring the primary sensor signals for engine temperature, speed (RPM), and throttle position (load). These primary signals are compared to preprogrammed "maps" in the ECU computer chip, and the ECU adjusts the fuel delivery to match the mapped values. An oxygen sensor provides continual feedback to the ECU based upon the amount of unused oxygen in the exhaust, indicating whether the fuel mixture being delivered is rich or lean. Based upon this feedback, the ECU further adjusts fuel input to reestablish the ideal air/fuel ratio. This operating mode is referred to as "closed loop" operation. The EFI system operates "closed loop" when all three of the following conditions are met:

a. The oil temperature is greater than 35°C (95°F).

b. The oxygen sensor has warmed sufficiently to provide a signal (minimum 375°C, 709°F).

c. Engine operation is at a steady state (not starting, warming up, accelerating, etc.).

During "closed loop" operation the ECU has the ability to readjust temporary and learned adaptive controls, providing compensation for changes in overall engine condition and operating environment, so it will be able to maintain the ideal air/fuel ratio of 14.7:1. The system requires a minimum engine oil temperature greater than 55°C (130°F) to properly adapt. These adaptive values are maintained as long as the ECU is "powered up" by the battery.

During certain operating periods such as cold starts, warm up, acceleration, etc., an air/fuel ratio richer than 14.7:1 is required and the system operates in an "open loop" mode. In "open loop" operation the monitoring of exhaust gases (output) is not used, and the controlling adjustments are based on the primary sensor signals and programmed maps only. The system operates "open loop" whenever the three conditions for closed loop operation (above) are not being met.

Important Service Notes!

- Cleanliness is essential and must be maintained at all times when servicing or working on the EFI system. Dirt, even in small quantities, can cause significant problems.
- Clean any joint or fitting with parts cleaning solvent before opening to prevent dirt from entering the system.
- Always depressurize the fuel system through the test valve in fuel rail before disconnecting or servicing any fuel system components. See fuel warning on page 5B.2.
- Never attempt to service any fuel system component while engine is running or ignition switch is ''on.''
- Do not use compressed air if the system is open. Cover any parts removed and wrap any open joints with plastic if they will remain open for any length of time. New parts should be removed from their protective packaging just prior to installation.
- Avoid direct water or spray contact with system components.
- Do not disconnect or reconnect the wiring harness connector to the control unit or any individual components with the ignition ''on.'' This can send a damaging voltage spike through the ECU.
- Do not allow the battery cables to touch opposing terminals. When connecting battery cables attach the positive (+) cable to positive (+) battery terminal first, followed by negative (-) cable to negative (-) battery terminal.
- Never start the engine when the cables are loose or poorly connected to the battery terminals.
- Never disconnect battery while engine is running.
- Never use a quick battery charger to start the engine.
- Do not charge battery with key switch ''on.''
- Always disconnect negative (-) battery cable lead before charging battery, and also unplug harness from ECU before performing any welding on equipment.

Electrical Components

Electronic Control Unit (ECU)

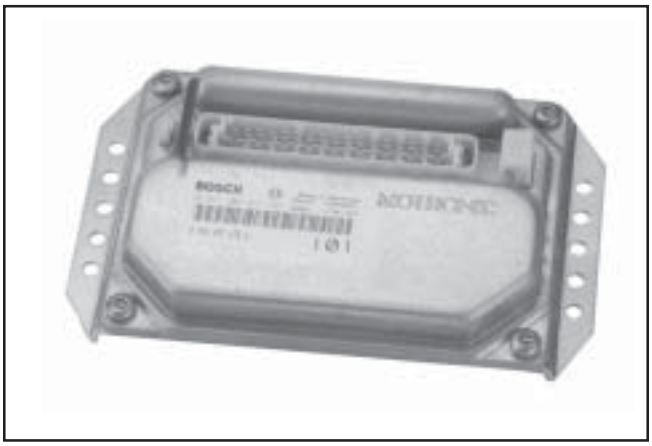

Figure 5B-1. “35 Pin” (MA 1.7) Metal-Cased ECU.

Figure 5B-2. “24 Pin” (MSE 1.0) Plastic-Cased ECU.

Figure 5B-3. “32 Pin” (MSE 1.1) Plastic-Cased ECU.

Three different styles of ECU's have been utilized in EFI production. The first style is easily identified by its metal case with large 35 pin connector block, and also as **MA 1.7**. See Figure 5B-1. The second and third styles have plastic cases, but are smaller in overall size. These have either a 24 pin or 32 pin connector block and identified as **MSE 1.0** or **MSE 1.1** respectively. See Figures 5B-2 and 5B-3. Basic function and operating control remains the same between the three, however, due to differences in the internal circuitry as well as the wiring harness, none of the ECU's are interchangeable. Certain individual service/ troubleshooting procedures also apply, where applicable, they are covered individually as: "35 Pin" (MA 1.7) Metal-Cased ECU, "24 Pin" (MSE 1.0) Plastic-Cased ECU, or "32 Pin" (MSE 1.1) Plastic-Cased ECU.

General

The ECU is the brain or central processing computer of the entire EFI fuel/ignition management system. During operation, sensors continuously gather data which is relayed through the wiring harness to input circuits within the ECU. Signals to the ECU include: ignition (on/off), crankshaft position and speed (RPM), throttle position, oil temperature, exhaust oxygen levels, and battery voltage. The ECU compares the input signals to the programmed maps in its memory to determine the appropriate fuel and spark requirements for the immediate operating conditions. The ECU then sends output signals to set the injector duration and ignition timing.

The ECU continually performs a diagnostic check of itself, each of the sensors, and the system performance. If a fault is detected, the ECU turns on the Malfunction Indicator Light (MIL) on the equipment control panel, stores the fault code in its fault memory, and goes into a default operating mode. Depending on the significance or severity of the fault, normal operation may continue, or "limp home" operation (slowed speed, richer running) may be initiated. A technician can access the stored fault code using a "blink code" diagnosis flashed out through the MIL. An optional computer software diagnostic program is also available, see Section 2.

The ECU requires a minimum of 7.0 volts to operate. The adaptive memory in the ECU is operational the moment the battery cables are connected, however the adapted values are lost if the battery becomes disconnected for any reason. The ECU will "relearn" the adapted values if the engine is operated for 10-15 minutes at varying speeds and loads after the oil temperature exceeds 55°C (130°F).

To prevent engine over-speed and possible failure, a "rev-limiting" feature is programmed into the ECU. If the maximum RPM limit (4125 RPM on MA 1.7, 4500 RPM on MSE 1.0 & MSE 1.1) is exceeded, the ECU suppresses the injection signals, cutting off the fuel flow. This process repeats itself in rapid succession, limiting operation to the preset maximum.

Service

Never attempt to disassemble the ECU. It is sealed to prevent damage to internal components. Warranty is void if the case is opened or tampered with in any way.

All operating and control functions within the ECU are preset. No internal servicing or readjustment may be performed. If a problem is encountered, and you determine the ECU to be faulty, contact your source of supply. Do not replace the ECU without factory authorization.

The relationship between the ECU and the throttle position sensor (TPS) is very critical to proper system operation. If the TPS or ECU is changed, or the mounting position of the TPS is altered, the applicable "TPS Initialization Procedure" (see pages 5B.8 or 5B.9) must be performed to restore the synchronization.

Engine Speed Sensor

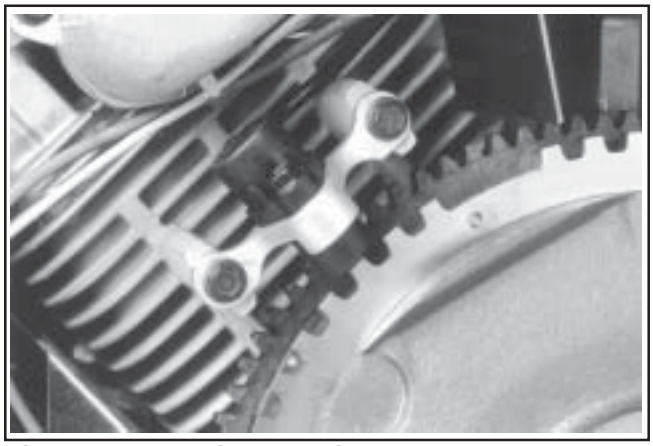

Figure 5B-4. Engine Speed Sensor.

General

The engine speed sensor is essential to engine operation; constantly monitoring the rotational speed (RPM) of the crankshaft. A ferromagnetic 60-tooth ring gear with two consecutive teeth missing is mounted on the flywheel. The inductive speed sensor is mounted **1.5 ± 0.25 mm (0.059 ± 0.010 in.)** away from the ring gear. During rotation, an AC voltage pulse is created within the sensor for each passing tooth. The ECU calculates engine speed from the time interval between the consecutive pulses. The two-tooth gap creates an interrupted input signal, corresponding to specific crankshaft position (84° BTDC) for cylinder #1. This signal serves as a reference for the control of ignition timing by the ECU. Synchronization of the inductive speed pickup and crankshaft position takes place during the first two revolutions each time the engine is started. The sensor must be properly connected at all times. If the sensor becomes disconnected for any reason, the engine will quit running.

Service

The engine speed sensor is a sealed, non-serviceable assembly. If "Fault Code" diagnosis indicates a problem within this area, check and test as follows.

1. Check the mounting and air gap of sensor. It must be **1.5 mm ± 0.25 mm (0.059 ± 0.010 in.)**.

2. Inspect the wiring and connections for damage or problems.

3. Make sure the engine has resistor type spark plugs.

4. Disconnect main harness connector from ECU.

5. Connect an ohmmeter between the designated pin terminals in the plug:

   "35 Pin" (MA 1.7) Metal-Cased ECU: #3 and #21 pin terminals.

   "24 Pin" (MSE 1.0) Plastic-Cased ECU: #9 and #10 pin terminals.

   "32 Pin" (MSE 1.1) Plastic-Cased ECU: #9 and #10 pin terminals.

   See pages 5B.28-5B.33 according to ECU style. A resistance value of **750-1000 Ω** at room temperature (20°C, 68°F) should be obtained.
   If resistance is correct, check the mounting, air gap, toothed ring gear (damage, runout, etc.), and flywheel key.

6. Disconnect the speed sensor connector from wiring harness. It is the connector with one heavy black lead (see Figure 5B-5). Viewing the connector as shown (dual aligning rails on top), test the resistance between the terminals indicated. A reading of **750-1000 Ω** should again be obtained.

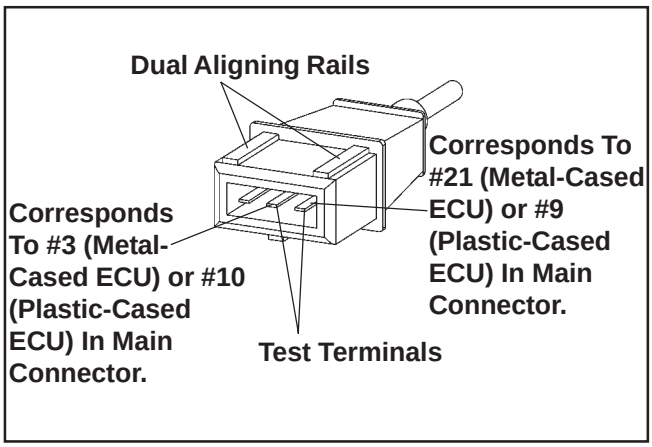

Figure 5B-5. Speed Sensor Connector.

7. a. If the resistance is incorrect, remove the screw securing the sensor to the mounting bracket and replace the sensor.

   b. If the resistance in step 5 was incorrect, but the resistance of the sensor alone was correct, test the main harness circuits between the sensor connector terminals and the corresponding pin terminals in the main connector. Correct any observed problem, reconnect the sensor, and perform step 5 again.

Throttle Position Sensor (TPS)

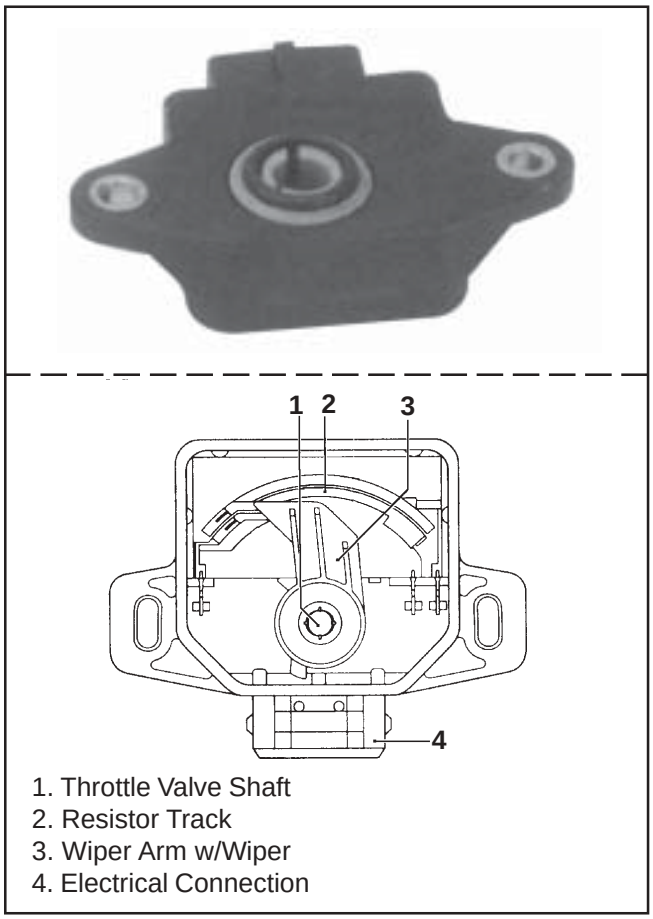

Figure 5B-6. Throttle Position Sensor Details.

General

The throttle position sensor (TPS) is used to indicate throttle plate angle to the ECU. Since the throttle (by way of the governor) reacts to engine load, the angle of the throttle plate is directly proportional to the load on the engine.

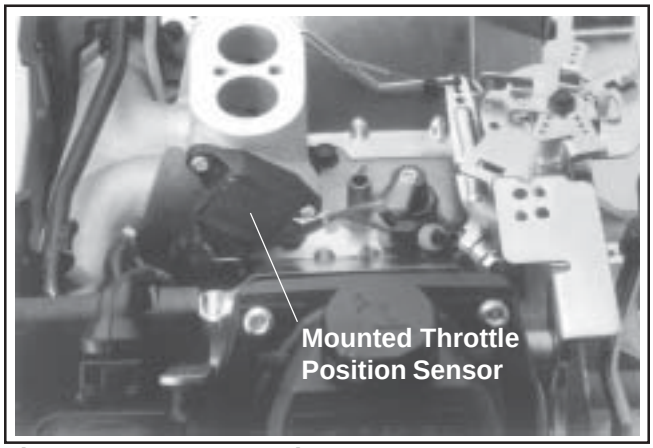

Figure 5B-7. TPS Location.

Mounted on the throttle body/intake manifold and operated directly off the end of the throttle shaft, the TPS works like a rheostat, varying the voltage signal to the ECU in direct correlation to the angle of the throttle plate. This signal, along with the other sensor signals, is processed by the ECU and compared to the internal preprogrammed maps to determine the required fuel and ignition settings for the amount of load.

The correct position of the TPS is established and set at the factory. Do not loosen the TPS or alter the mounting position unless absolutely required by fault code diagnosis or throttle shaft service. If the TPS is loosened or repositioned the appropriate "TPS Initialization Procedure" (pages 5B.8-5B.10) **must** be performed to reestablish the baseline relationship between the ECU and the TPS.

5B

Service

The TPS is a sealed, non-serviceable assembly. If diagnosis indicates a bad sensor, complete replacement is necessary. If a blink code indicates a problem with the TPS, it can be tested as follows:

1. Counting the number of turns, back out the idle speed adjusting screw (counterclockwise) until the throttle plates can be closed completely.

2. Disconnect the main harness connector from the ECU, but leave the TPS mounted to the throttle body/manifold.

3. Connect the ohmmeter leads as follows: (See chart on pages 5B.28, 5B.31, or 5B.32).

   "35 Pin" (MA 1.7) Metal-Cased ECU: Red (positive) ohmmeter lead to #12 pin terminal, and Black (negative) ohmmeter lead to #27 pin terminal.

   "24 Pin" (MSE 1.0) Plastic-Cased ECU: Red (positive) ohmmeter lead to #8 pin terminal, and Black (negative) ohmmeter lead to #4 pin terminal.

   "32 Pin" (MSE 1.1) Plastic-Cased ECU: Red (positive) ohmmeter lead to #8 pin terminal, and Black (negative) ohmmeter lead to #4 pin terminal.

Hold the throttle closed and check the resistance. It should be **800-1200 Ω**.

4. Leave the leads connected to the pin terminals as described in step 3. Rotate the throttle shaft slowly counterclockwise to the full throttle position. Monitor the dial during rotation for indication of any momentary short or open circuits. Note the resistance at the full throttle position. It should be **1800-3000 Ω**.

5. Disconnect the main wiring harness connector from the TPS, leaving the TPS assembled to the manifold. Refer to the chart below and perform the resistance checks indicated between the terminals in the TPS switch, with the throttle in the positions specified.

Throttle Position	Between Terminals	Resistance Value (Ω)	Continuity
Closed	2 & 3	800-1200	Yes
Closed	1 & 3	1800-3000	Yes
Full	2 & 3	1800-3000	Yes
Full	1 & 3	800-1200	Yes
Any	1 & 2	1600-2500	Yes

If the resistance values in steps 3, 4, and 5 are within specifications, go to step 6.

If the resistance values are not within specifications, or a momentary short or open circuit was detected during rotation (step 4), the TPS needs to be replaced, go to step 7.

6. Check the TPS circuits (input, ground) between the TPS plug and the main harness connector for continuity, damage, etc. See chart on pages 5B.28, 5B.31, or 5B.32.

"35 Pin" (MA 1.7) Metal-Cased ECU: Pin Circuits #12 and #27.

"24 Pin" (MSE 1.0) Plastic-Cased ECU: Pin Circuits #8 and #4.

"32 Pin" (MSE 1.1) Plastic-Cased ECU: Pin Circuits #8 and #4.

a. Repair or replace as required.

b. Turn the idle speed screw back in to its original setting.

c. Reconnect connector plugs, start engine and retest system operation.

7. Remove the two mounting screws from the TPS. Save the screws for reuse. Remove and discard the faulty TPS. Install the replacement TPS and secure with the original mounting screws.

a. Reconnect both connector plugs.

b. Perform the appropriate "TPS Initialization Procedure" integrating the new sensor to the ECU.

TPS Initialization Procedure

For "35 Pin" (MA 1.7) Metal-Cased ECU and "24 Pin" (MSE 1.0) Plastic-Cased ECU only

1. Check that the basic engine, all sensors, fuel, fuel pressure, and battery are good and functionally within specifications.

Important!

2. Remove/disconnect ALL external loads from engine (belts, pumps, electric PTO clutch, alternator, rectifier-regulator, etc.).

3. Start the engine and allow it to warm up for 5-10 minutes, so oil temperature is above 55°C (130°F).

4. Move the throttle control to the idle position and allow engine to stabilize for a minimum of one minute.

5. Install a heavy rubber band around the throttle lever and the manifold boss, to firmly hold the throttle against the idle stop. On some EFI engines there is a dampening spring on the end of the idle speed screw. The dampening spring (if used) should be fully compressed and the tab on the throttle lever in direct contact with the speed screw. Adjust the idle speed to 1500 RPM, using a tachometer.

6. Shut off engine.

7. Locate the service connector plug in the wiring harness.

"35 Pin" (MA 1.7) Metal-Cased ECU: Connect a jumper wire from the TPS initialization pin #8 (gray wire) to the ground pin (black wire), or use the jumper plug with the red jumper wire. See Figure 5B-8.

"24 Pin" (MSE 1.0) Plastic-Cased ECU: Connect a jumper wire from the TPS initialization pin #24 (violet wire) to the battery voltage pin (red wire), or use the jumper plug with the blue jumper wire. See Figure 5B-9.

Figure 5B-8. Service Connector Plug, Metal-Cased ECU Harness.

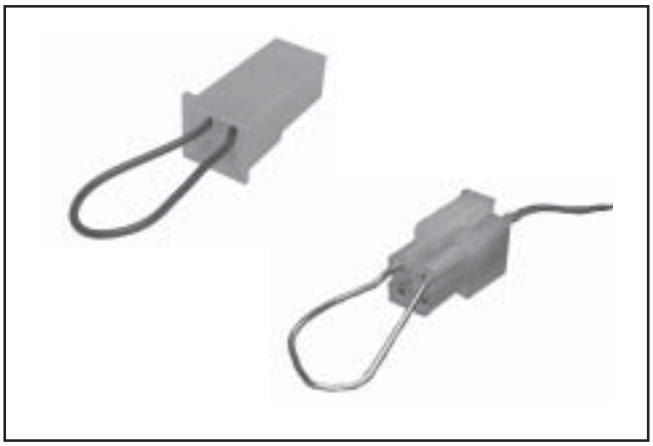

Figure 5B-9. Service Connector Plug, Plastic-Cased ECU Harness.

8. Hold throttle against idle speed stop screw, turn the ignition switch to "on" position (do not start engine), and observe the Malfunction Indicator Light (MIL).

   a. The light should blink on/off quickly for approximately 3 seconds and then go off and stay off, indicating the initialization procedure has been successful.

   b. If light stays on or blinking ceases prematurely, the procedure was unsuccessful and must be repeated. Possible causes for unsuccessful learning may be: 1) Movement occurred in either the TPS or throttle shaft during procedure, 2) Crankshaft movement/ rotation was detected by the speed sensor during procedure, 3) Throttle plate position was out of learnable range (recheck the 1500 RPM idle speed adjustment), or 4) Problem with ECU or TPS.

9. When the initialization procedure has been successfully completed, turn off the key switch, remove the jumper wire or connector, and remove the rubber band from the throttle lever.

10. Disconnect negative (-) battery cable temporarily to clear all learned adjustments.

11. Reconnect the battery cable and all external loads. Readjust the idle speed to the equipment manufacturer's specified setting and recheck the high-speed, no-load RPM setting. Observe the overall performance.

TPS Initialization Procedure

For "32 Pin" (MSE 1.1) Plastic-Cased ECU Only ("Auto-Learn" Initialization)

1. Check that the basic engine, all sensors, fuel, fuel pressure, and battery are good and functionally within specifications.

Important!

2. Remove/disconnect ALL external loads from the engine (belts, pumps, electric PTO clutch, alternator, rectifier-regulator, etc.).

3. Locate the service connector plug in the wiring harness. To initiate the TPS auto-learn function, connect a jumper wire from the TPS initialization pin #24 (violet wire) to the battery voltage pin (red wire), or use the jumper plug with the blue jumper wire. If using the PC-based diagnostic tool and software (see Section 2), go to "Special Tests" and follow the prompts to complete.

4. Start the engine and immediately observe the Malfunction Indicator Light (MIL). The light should start blinking 4 consecutive times every 2 seconds.

5. Remove the jumper wire or plug from the service connector plug in wiring harness.

6. Run the engine at full throttle (above 3000 RPM), to warm up the engine and initiate O_2 sensor function in "closed-loop" operation.

7. Watch the "MIL". When the light starts blinking rapidly, (5 blinks per second), move the throttle lever to the low idle speed position. Check and adjust the idle speed to **1500 RPM**, using a tachometer. The lamp should continue to blink rapidly for another 30 seconds before switching to a slow blink.

8. When the "MIL" blinks slowly, do not do anything but wait until the "MIL" shuts off. This indicates that this procedure has been completed successfully.

9. Shut off the engine.

   If the learn procedure was successfully completed, the external loads removed/disconnected in Step 2 may be reconnected.

   If the procedure was unsuccessful see Steps a. and b. following.

   a. If during this procedure, the "MIL" goes back into blinking 4 consecutive blinks every 2 seconds, the engine and O_2 sensor have cooled down and out of "closed-loop" operation, prohibiting the learning from occurring. Repeat Steps 6-9.

   b. If during the procedure with the engine running, the "MIL" stays "on" continuously, for more than 15 seconds, turn off the ignition. Then initiate the fault code sequence, by doing three consecutive key-on/key-off cycles leaving the key "on" in the last sequence, (each key-on/key-off sequence must be less than 2.5 seconds long). The fault detected must be corrected before the "auto-learn" function can be re-initiated. The PC-based diagnostic tool and software may be used to read out the fault code and assist with the troubleshooting and repair.

Engine (Oil) Temperature Sensor

Figure 5B-10. Engine (Oil) Temperature Sensor.

General

The engine (oil) temperature sensor (Figure 5B-10) is used by the system to help determine fuel requirements for starting, (a cold engine needs more fuel than one at or near operating temperature). Mounted in the oil filter adapter housing, it has a temperature-sensitive resistor that extends into the oil flow. The resistance changes with oil temperature, altering the voltage sent to the ECU. Using a table stored in its memory, the ECU correlates the voltage drop to a specific temperature. Using the fuel delivery "maps", the ECU then knows how much fuel is required for starting at that temperature.

Service

The temperature sensor is a sealed, non-serviceable assembly. A faulty sensor must be replaced. If a blink code indicates a problem with the temperature sensor, it can be tested as follows:

1. Remove the oil temperature sensor from the adapter housing and cap or block the adapter hole.

2. Wipe sensor clean and allow it to reach room temperature (20°C, 68°F).

3. Unplug the main harness connector from the ECU.

4. With the sensor connected, check the oil temperature sensor circuit resistance. The value should be **2375-2625 Ω**. See chart on pages 5B.28, 5B.31, or 5B.32.

   "35 Pin" (MA 1.7) Metal-Cased ECU: Check between the #14 and #27 pin terminals.

"24 Pin" (MSE 1.0) Plastic-Cased ECU: Check between the #6 and #4 pin terminals.

"32 Pin" (MSE 1.1) Plastic-Cased ECU: Check between the #6 and #4 pin terminals.

5. Unplug the sensor connector and check sensor resistance separately. Resistance value should again be **2375-2625 Ω**.

   a. If the resistance is out of specifications, replace the temperature sensor.

   b. If it is within specifications, proceed to Step 6.

6. Check the temperature sensor circuits (input, ground) from the main harness connector to the corresponding terminal in the sensor plug for continuity, damage, etc.

   "35 Pin" (MA 1.7) Metal-Cased ECU: Pin circuits #14 and #27.

   "24 Pin" (MSE 1.0) Plastic-Cased ECU: Pin circuits #6 and #4.

   "32 Pin" (MSE 1.1) Plastic-Cased ECU: Pin circuits #6 and #4.

Oxygen Sensor

Figure 5B-11. Oxygen Sensor.

General

The oxygen sensor functions like a small battery, generating a voltage signal to the ECU, based upon the difference in oxygen content between the exhaust gas and the ambient air.

The tip of the sensor, protruding into the exhaust gas, is hollow (see cutaway Figure 5B-12). The outer portion of the tip is surrounded by the exhaust gas, with the inner portion exposed to the ambient air. When the oxygen concentration on one side of the tip is different than that of the other side, a voltage signal typically cycling between 0.2 and 1.0 volt is generated between the electrodes and sent to the ECU. The voltage signal tells the ECU if the engine is straying from the ideal 14.7:1 fuel mixture, and the ECU then adjusts the injector pulse accordingly.

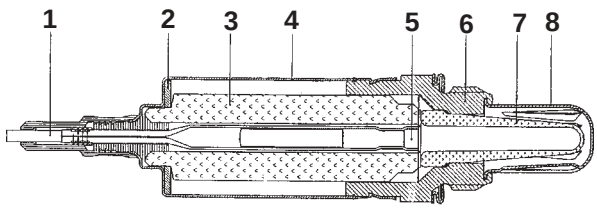

1. Connection Cable
2. Disc Spring
3. Ceramic Support Tube
4. Protective Sleeve
5. Contact Element
6. Sensor Housing
7. Active Ceramic Sensor
8. Protective Tube

Figure 5B-12. Cutaway of Oxygen Sensor.

The oxygen sensor can function only after being heated by exhaust temperatures to a minimum of 375°C (709°F). A cold oxygen sensor will require approximately 1-2 minutes at moderate engine load to warm sufficiently to generate a voltage signal. Proper grounding is also critical. The oxygen sensor grounds through the metal shell, so a good, solid, unbroken ground path back through the exhaust system components, engine, and wiring harness is required. Any disruption or break in the ground circuit can affect the output signal and trigger misleading fault codes. Keep that in mind when doing any troubleshooting associated with the oxygen sensor. The oxygen sensor can also be contaminated by leaded fuel, certain RTV and/or other silicone compounds, carburetor cleaners, etc. Use only those products indicated as "O_2 Sensor Safe."

Service

Like the other sensors already discussed, the oxygen sensor is a non-serviceable component. Complete replacement is required if it is faulty. The sensor and wiring harness can be checked as follows.

NOTE: All tests should be conducted with a good quality, high-impedance, digital VOA meter for accurate results.

1. Oxygen sensor must be hot (minimum of 400°C, 725°F). Run engine for about 5 minutes. With the engine running, disconnect the oxygen sensor lead from the wiring harness. Set VOA meter for DC volts and connect the **red** lead to the disconnected sensor lead, and the **black** lead to the sensor shell. Check for a voltage reading between 0.2 v-1.0 v.

   a. If voltage is in the specified range, go to Step 2.

   b. If the voltage is not in the specified range, reconnect the oxygen sensor lead. With the lead connected, probe or connect the sensor connection with the red VOA meter lead. Attach the black VOA meter lead to a known good ground location. Start and run the engine at 3/4 throttle and note the voltage output.

      The reading should cycle between 0.2 v-1.0 v, which indicates the oxygen sensor is functioning normally and also the fuel delivery controlled by the ECU is within prescribed parameters. If the voltage readings show a steady decline, bump the governor lever to make the engine accelerate very quickly and check the reading again. If voltage momentarily increases and then again declines, without cycling, engine may be running lean due to incorrect TPS initialization. Shut off the engine, perform TPS initialization, and then repeat the test. If TPS initialization cannot be achieved, perform step c.

   c. Replace the oxygen sensor (page 5B.13). Run the engine long enough to bring the new sensor up to temperature and repeat the output test from step 1. The cycling voltage from 0.2 to 1.0 volt should be indicated.

2. Move the **black** voltmeter lead to the engine ground location and repeat the output test. The same voltage (0.2 v-1.0 v) should be indicated.

   a. If the same voltage reading exists, go on to Step 3.

   b. If the voltage output is no longer correct, a bad ground path exists between the sensor and the engine ground. Touch the black lead at various points, backtracking from the engine ground back toward the sensor, watching for a voltage change at each location. If the correct voltage reading reappears at some point, check for a problem (rust, corrosion, loose joint or connection) between that point and the previous checkpoint. For example, if the reading is too low at points on the crankcase, but correct voltage is indicated when the black lead is touched to the skin of the muffler, the flange joints at the exhaust ports become suspect.

3. With sensor still hot (minimum of 400°C, 752°F), switch meter to the Rx1K or Rx2K scale and check the resistance between the sensor lead and sensor case. It should be less than **2.0 KΩ**.

   a. If the resistance is less than **2.0 KΩ**, go to Step 4.

   b. If the resistance is greater than **2.0 KΩ**, the oxygen sensor is bad, replace it.

4. Allow the sensor to cool (less than 60°C, 140°F) and retest the resistance with the meter set on the Rx1M scale. With sensor cool, the resistance should be greater than **1.0 MΩ**.

   a. If the resistance is greater than **1.0 MΩ**, go to Step 5.

   b. If the resistance is less than **1.0 MΩ**, the sensor is bad, replace it.

5. With the oxygen sensor disconnected and engine not running, disconnect the main harness connector from the ECU and set the meter to the Rx1 scale. Check the circuit continuity as follows:

   "35 Pin" (MA 1.7) Metal-Cased ECU: Check for continuity from pin #9 of the ECU connector (see page 5B.28) to the shell of the oxygen sensor, and from pin #10 to the sensor connector terminal of the main harness. Both tests should indicate continuity.

   "24 Pin" (MSE 1.0) Plastic-Cased ECU: Check for continuity from pin #15 of the ECU connector (see page 5B.31) to the shell of the oxygen sensor, and from pin #11 to the sensor connector terminal of the main harness. Both tests should indicate continuity.

   "32 Pin" (MSE 1.1) Plastic Cased ECU: Check for continuity from pin #19 of the ECU connector (see page 5B.32) to the shell of the oxygen sensor, and from pin #20 to the sensor terminal of the main harness. Both tests should indicate continuity.

a. If there is no continuity displayed in either of the tests, check the harness circuit for breaks or damage, and the connections for poor contact, moisture, or corrosion. If no continuity was found in the first test, also check for a poor/broken ground path back through the exhaust system, engine, and mounting (sensor is grounded through its shell).

b. If continuity is indicated, go to step 6.

6. With the key switch in the ''on/run'' position, using a high impedance voltmeter, check the voltage from the wiring harness oxygen sensor connector to the engine ground location. Look for a steady voltage from **350-550 mv (0.35-0.55 v)**.

   a. If voltage reading is not as specified, move the black voltmeter lead to the negative post of the battery, to be certain of a good ground. If the voltage is still not correct, the ECU is probably bad.

   b. If voltage readings are correct, clear the fault codes and run the engine to check if any fault codes reappear.

To Replace Oxygen Sensor

1. Disconnect the oxygen sensor connector from wiring harness.

2. Loosen and remove the oxygen sensor from the exhaust manifold/muffler assembly.

3. Apply anti-seize compound sparingly to threads of new oxygen sensor, if none already exists. **DO NOT** get any on the tip as it will contaminate the sensor. Install sensor and torque to **50-60 N·m (37-44 ft. lb.)**.

4. Reconnect the lead to wiring harness connector. Make sure it can not contact hot surfaces, moving parts, etc.

5. Test run the engine.

Electrical Relay

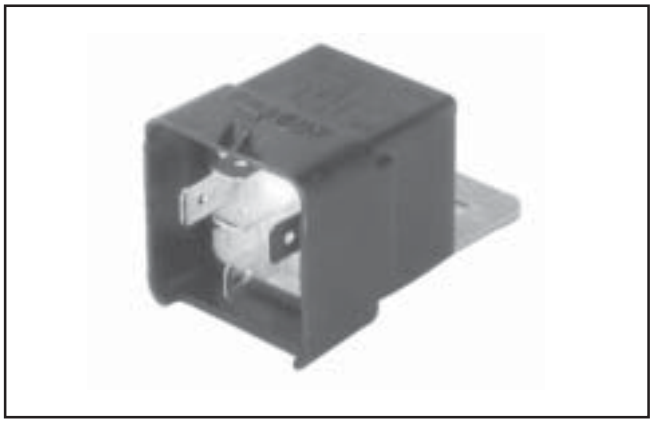

Figure 5B-13. Electrical Relay.

5B

General

The electrical relay is used to supply power to the injectors, coils, and fuel pump. When the key switch is turned "on" and all safety switch requirements met, the relay provides 12 volts to the fuel pump circuit, injectors, and ignition coils. The fuel pump circuit is continuously grounded, so the pump is immediately activated and pressurizes the system. Activation of the ignition coils and injectors is controlled by the ECU, which grounds their respective circuits at the proper times.

Service

A malfunctioning relay can result in starting or operating difficulties. The relay and related wiring can be tested as follows:

1. Disconnect the relay connector plug from the relay.

2. Connect black lead of VOA meter to a chassis ground location. Connect red lead to the #86 terminal in relay connector (see Figure 5B-14). Set meter to test resistance (Rx1). Turn ignition switch from **"off"** to **"on"**. Meter should indicate continuity (ground circuit is completed) for 1 to 3 seconds. Turn key switch back off.

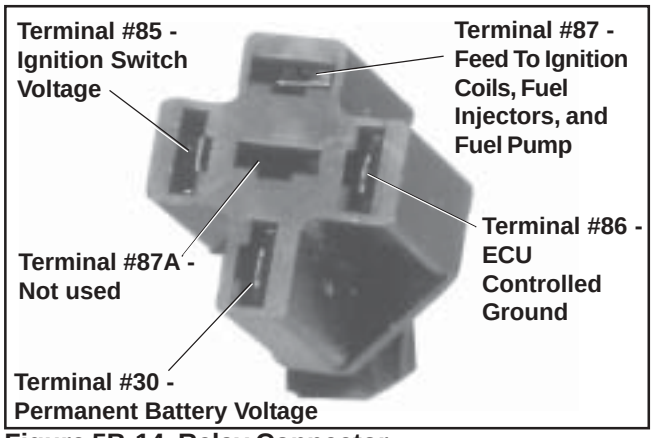

Figure 5B-14. Relay Connector.

a. Clean the connection and check wiring if circuit was not completed.

3. Set meter for DC voltage. Touch red tester lead to the #30 terminal in relay connector. A reading of **12 volts** should be indicated at all times.

4. Connect red lead of meter to the #85 terminal in relay connector. Turn key switch to the "on" position. Battery voltage should be present.

   a. No voltage present indicates a problem in the wiring or at the connector.

   b. If voltage is present, the wiring to the connector is good. Turn ignition switch **"off"** and proceed to test 5 to test the relay.

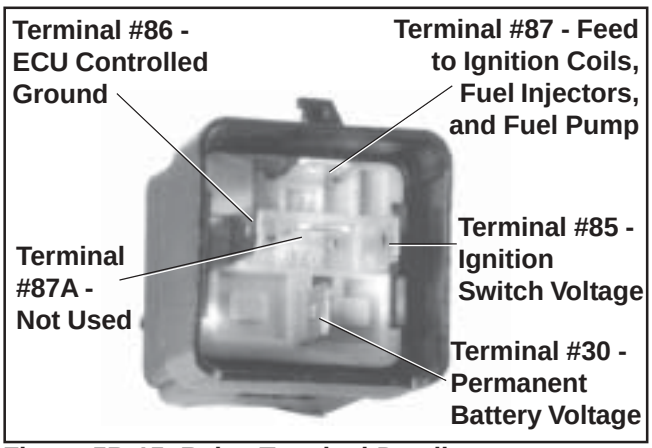

Figure 5B-15. Relay Terminal Details.

5. Connect an ohmmeter (Rx1 scale) between the #85 and #86 terminals in the relay. There should be continuity. See Figure 5B-15.

6. Attach ohmmeter leads to the #30 and #87 terminals in relay. Initially, there should be no continuity. Using a 12 volt power supply, connect the positive (+) lead to the #85 terminal, and touch the negative (-) lead to the #86 terminal. When 12 volts is applied, the relay should activate and continuity should exist (circuit made) between the #30 and #87 terminals. Repeat the test several times. If, at any time the relay fails to activate the circuit, replace the relay.

Fuel Injectors

Figure 5B-16. Style 1 Fuel Injector.

Figure 5B-17. Style 2 Fuel Injector.

General

The fuel injectors mount into the intake manifold, and the fuel rail attaches to them at the top end. Replaceable O-Rings on both ends of the injector prevent external fuel leakage, and also insulate it from heat and vibration. A special clip connects each injector to the fuel rail, retaining it in place.

When the key switch is on and the relay is closed, the fuel rail is pressurized, and voltage is present at the injector. At the proper instant, the ECU completes the ground circuit, energizing the injector. The valve needle in the injector is opened electromagnetically, and the pressure in the fuel rail forces fuel down through the inside. The "director plate" at the tip of the injector (see inset) contains a series of calibrated openings which directs the fuel into the manifold in a cone-shaped spray pattern.

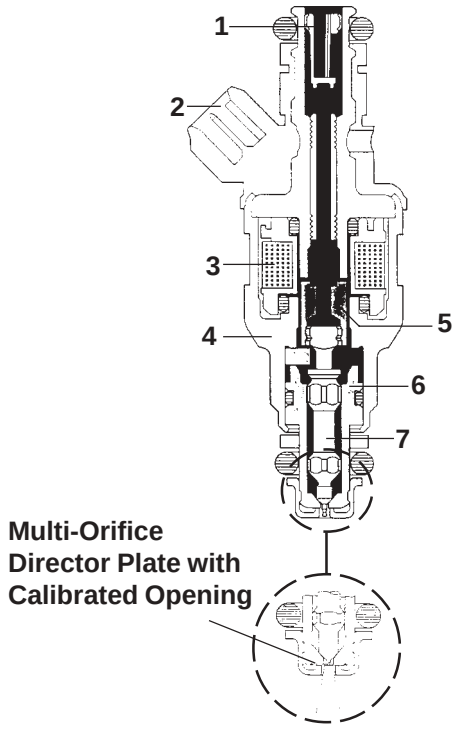

1. Filter strainer in fuel supply
2. Electrical connection
3. Solenoid winding
4. Valve housing
5. Armature
6. Valve body
7. Valve needle

Figure 5B-18. Fuel Injector Details.

The injector is opened and closed once for each crankshaft revolution, however, only one-half the total amount of fuel needed for one firing is injected during each opening. The amount of fuel injected is controlled by the ECU and determined by the length of time the valve needle is held open, also referred to as the "injection duration" or "pulse width". It may vary in length from 1.5-8 milliseconds depending on the speed and load requirements of the engine.

Service

Injector problems typically fall into three general categories: electrical, dirty/clogged, or leakage. An electrical problem usually causes one or both of the injectors to stop functioning. Several methods may be used to check if the injectors are operating.

1. With the engine running at idle, feel for operational vibration, indicating that they are opening and closing.

2. When temperatures prohibit touching, listen for a buzzing or clicking sound with a screwdriver or mechanic's stethoscope (see Figure 5B-19).

Figure 5B-19. Checking Injectors.

3. Disconnect the electrical connector from an injector and listen for a change in idle performance (only running on one cylinder) or a change in injector noise or vibration.

If an injector is not operating, it can indicate either a bad injector, or a wiring/electrical connection problem. Check as follows:

NOTE: **Do not** apply voltage to the fuel injector(s). Excessive voltage will burn out the injector(s). **Do not** ground the injector(s) with the ignition **"on"**. Injector(s) will open/turn on if relay is energized.

1. Disconnect the electrical connector from both injectors. Plug the 12 volt Noid Light (part of EFI Service Kit, see Section 2) in one connector.

Figure 5B-20. Volt Noid Light.

2. Make sure all safety switch requirements are met. Crank the engine and check for flashing of noid light. Repeat test at other connector.

   a. If flashing occurs, use an ohmmeter (Rx1 scale) and check the resistance of each injector across the two terminals. Proper resistance is **12-20 Ω**. If injector resistance is correct, check whether the connector and injector terminals are making a good connection. If the resistance is not correct, replace the injector following steps 1-8 and 13-16 below.

   b. If no flashing occurs, reattach connectors to both injectors. Disconnect the main harness connector from the ECU and the connector from the relay. Set the ohmmeter to the Rx1 scale and check the injector circuit resistance as follows:

      "35 Pin" (MA 1.7) Metal-Cased ECU: Check the resistance between the relay terminal #87 and pin #35 in main connector. Resistance should be **4-15 Ω**.

      "24 Pin" (MSE 1.0) Plastic-Cased ECU: Check the resistance between relay terminal #87 and pin #16 in main connector. Then check resistance between relay terminal #87 and pin #17. Resistance should be **4-15 Ω** for each circuit.

      "32 Pin" (MSE 1.1) Plastic-Cased ECU: Check the resistance between relay terminal #87 and pin #14 in the main connector. Then check the resistance between relay terminal #87 and pin #15. Resistance should be **4-15 Ω** for each circuit.

      Check all electrical connections, connectors, and wiring harness leads if resistance is incorrect.

Injector leakage is very unlikely, but in those rare instances it can be internal (past the tip of the valve needle), or external (weeping around the injector body). See Figure 5B-21. The loss of system pressure from the leakage can cause hot restart problems and longer cranking times. To check for leakage it will be necessary to remove the blower housing, which may involve removing the engine from the unit.

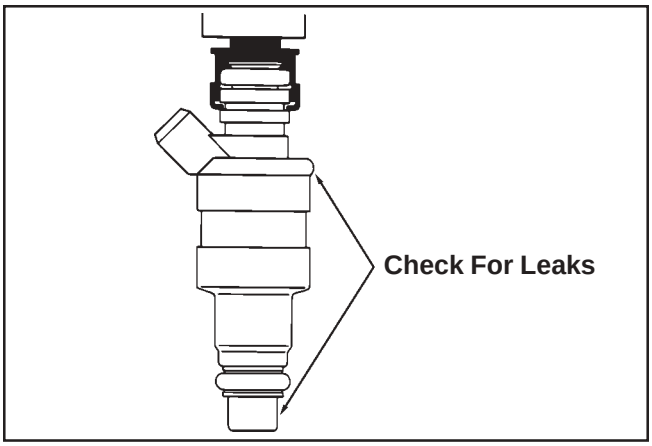

Figure 5B-21. Injector Inspection Points.

1. Engine must be cool. Depressurize fuel system through test valve in fuel rail.

2. Disconnect spark plug leads from spark plugs.

3. Remove the air cleaner outer cover, inner wing nut, element cover and air cleaner element/ precleaner. Service air cleaner components as required.

4. Remove the two screws securing the air cleaner base to throttle body manifold. Remove the air cleaner base to permit access to the injectors. Check condition of air cleaner base gasket, replace if necessary.

5. Remove the flywheel screen if it overlaps the blower housing.

6. If the engine has a radiator-type oil cooler mounted to the blower housing, remove the two oil cooler mounting screws.

7. Remove the blower housing mounting screws. Note the location of the plated (silver) screw attaching the rectifier-regulator ground lead. Remove the blower housing.

8. Thoroughly clean the area around and including the throttle body/manifold and the injectors.

9. Disconnect the throttle linkage and damper spring from the throttle lever. Disconnect the TPS lead from the harness.

10. Remove the manifold mounting bolts and separate the throttle body/manifold from the engine leaving the TPS, fuel rail, air baffle, injectors and line connections intact. Discard the old gaskets.

11. Position the manifold assembly over an appropriate container and turn the key switch **"on"** to activate the fuel pump and pressurize the system. Do not turn switch to **"start"** position.

12. If either injector exhibits leakage of more than two to four drops per minute from the tip, or shows any sign of leakage around the outer shell, turn the ignition switch off and replace injector as follows.

13. Depressurize the fuel system following the procedure in the fuel warning on page 5B.2. Remove the two fuel rail mounting screws.

14. Clean any dirt accumulation from the sealing/mounting area of the faulty injector(s) and disconnect the electrical connector(s).

15. Pull the retaining clip off the top of the injector(s) and remove from manifold.

16. Reverse the appropriate procedures to install the new injector(s) and reassemble the engine. Use new O-Rings any time an injector is removed (new replacement injectors include new O-Rings). Lubricate O-Rings lightly with oil. Torque the fuel rail and blower housing mounting screws to **3.9 N·m (35 in. lb.)**, and the intake manifold and air cleaner mounting screws to **9.9 N·m (88 in. lb.)**.

Injector problems due to dirt or clogging are generally unlikely, due to the design of the injectors, the high fuel pressure, and the detergent additives in the gasoline. Symptoms that could be caused by dirty/clogged injectors include rough idle, hesitation/stumble during acceleration, or triggering of fault codes related to fuel delivery. Injector clogging is usually caused by a buildup of deposits on the director plate, restricting the flow of fuel, resulting in a poor spray pattern. Some contributing factors to injector clogging include higher than normal operating temperatures, short operating intervals, and dirty, incorrect, or poor quality fuel. Cleaning of clogged injectors is not recommended; they should be replaced. Additives and higher grades of fuel can be used as a preventative measure if clogging has been a problem.

Ignition System

General

A high voltage, solid state, battery ignition system is used with the EFI system. The ECU controls the ignition output and timing through transistorized control of the primary current delivered to the coils. Based on input from the speed sensor, the ECU determines the correct firing point for the speed at which the engine is running. At the proper instant, it releases the flow of primary current to the coil. The primary current induces high voltage in the coil secondary, which is then delivered to the spark plug. Each coil fires every revolution, but every other spark is "wasted."

Service

Except for removing the spark plug lead by unscrewing it from the secondary tower (see Figure 5B-22), no coil servicing is possible. If a coil is determined to be faulty, replacement is necessary. An ohmmeter may be used to test the wiring and coil windings.

Figure 5B-22. Ignition Coil.

NOTE: Do not ground the coils with the ignition **"on,"** as they may overheat or spark.

Testing

1. Disconnect the main harness connector from ECU.

   "35 Pin" (MA 1.7) Metal-Cased ECU: Locate pins #1 and #19 in the 35 pin connector. See page 5B.28.

"24 Pin" (MSE 1.0) Plastic-Cased ECU: Locate pins #22 and #23 in the 24 pin connector. See page 5B.31.

"32 Pin" (MSE 1.1) Plastic Cased ECU: Locate pins #30 and #31 in the 32 pin connector. See page 5B.32.

2. Disconnect connector from relay and locate terminal #87 in connector.

3. Using an ohmmeter set on the Rx1 scale, check the resistance in circuits as follows:

   "35 Pin" (MA 1.7) Metal-Cased ECU: Check between terminal #87 and pin #1 for coil #1. Repeat the test between terminal #87 and pin #19 for coil #2.

   "24 Pin" (MSE 1.0) Plastic-Cased ECU: Check between terminal #87 and pin #22 for coil #1. Repeat the test between terminal #87 and pin #23 for coil #2.

   "32 Pin" (MSE 1.1) Plastic-Cased ECU: Check between terminal #87 and pin #30 for coil #1. Repeat the test between terminal #87 and pin #31 for coil #2.

   A reading of **1.8-4.0 Ω** in each test indicates that the wiring and coil primary circuits are OK.

   a. If reading(s) are not within specified range, check and clean connections and retest.

   b. If reading(s) are still not within the specified range, test the coils separately from main harness as follows:

      1. Disconnect the red and black primary leads from the coil terminals.

      2. Connect an ohmmeter set on the Rx1 scale to the primary terminals. Primary resistance should be **1.8-2.5 Ω**.

      3. Disconnect the secondary lead from the spark plug. Connect an ohmmeter set on the Rx10K scale between the spark plug boot terminal and the red primary terminal. Secondary resistance should be **13,000-17,500 Ω**.

      4. If the secondary resistance is not within the specified range, unscrew the spark plug lead nut from the coil secondary tower and remove the plug lead. Repeat step b. 3, testing from the secondary tower terminal to the red primary terminal. If resistance is now correct, the coil is good, but the spark plug lead is faulty, replace the lead. If step b. 2 resistance was incorrect and/or the secondary resistance is still incorrect, the coil is faulty and needs to be replaced.

Spark Plugs

EFI engines are equipped with Champion® RC12YC (Kohler Part No. **12 132 02-S**) resistor style spark plugs. Equivalent alternate brand plugs can also be used, but must be a resistor style plug or permanent damage to the ECU will occur in addition to affecting operation. Proper spark plug gap is **0.76 mm (0.030 in.)**.

Wiring Harness

The wiring harness used in the EFI system connects the electrical components, providing current and ground paths for the system to operate. All input and output signaling occurs through a special all weather connector that attaches and locks to the ECU (see Figures 5B-23, 5B-24, and 5B-25).

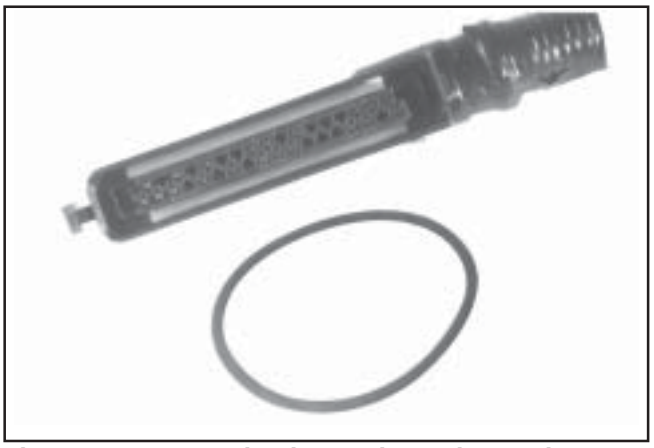

Figure 5B-23. "35 Pin" (MA 1.7) Metal-Cased ECU Connector and O-Ring.

Figure 5B-24. "24 Pin" (MSE 1.0) Plastic-Cased ECU Connector.

Figure 5B-25. "32 Pin" (MSE 1.1) Plastic-Cased ECU Connector.

The condition of the wiring, connectors, and terminal connections is essential to system function and performance. Corrosion, moisture, and poor connections are more likely the cause of operating problems and system errors than an actual component. Refer to the ''Troubleshooting – Electrical'' section for additional information.

Battery Charging System

EFI engines are equipped with either a 15 or 25 amp charging system to accommodate the combined electrical demands of the ignition system and the specific application. Charging system troubleshooting information is provided in Section 8.

Fuel Components

Fuel Pump

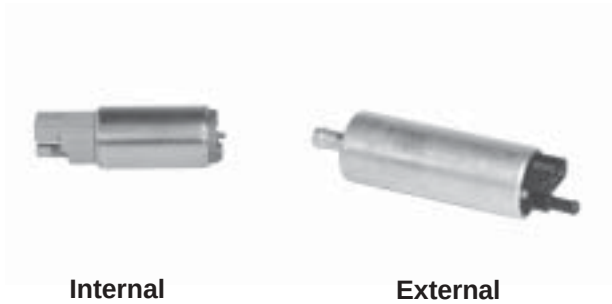

Figure 5B-26. Fuel Pump Styles.

5B

General

An electric fuel pump is used to transfer fuel in the EFI system. Depending on the application, the pump may be inside the fuel tank, or in the fuel line near the tank. The pumps are rated for a minimum output of 25 liters per hour at 39 psi. The pumps have an internal 60-micron filter. In addition, the in-tank style pumps will have a pre-filter attached to the inlet. In-line pump systems may also have a filter ahead of the pump on the pick-up/low pressure side. The final filter is covered separately on page 5B.22.

When the key switch is turned **"on"** and all safety switch requirements are met, the ECU through the relay, activates the fuel pump, which pressurizes the system for start-up. If the key switch is not promptly turned to the "start" position, the engine fails to start, or the engine is stopped with the key switch "on" (as in the case of an accident), the ECU switches off the pump preventing the continued delivery of fuel. In this situation, the MIL will go on, but it will go back off after 4 cranking revolutions if system function is OK. Once the engine is running, the fuel pump remains on.

Service

The fuel pumps are non-serviceable and must be replaced if determined to be faulty. If a fuel delivery problem is suspected, make certain the pump is being activated through the relay, all electrical connections are properly secured, the fuses are good, and a minimum of 7.0 volts is being supplied. If during cranking, voltage drops below 7.0 volts, a reduction of fuel pressure may occur resulting in a lean starting condition. If required, testing of the fuel pump and relay may be conducted.

1. Connect the black hose of Pressure Tester (part of EFI Service Kit, see Section 2), to the test valve in the fuel rail. Route the clear hose into a portable gasoline container or the equipment fuel tank.

2. Turn on the key switch to activate the pump and check the system pressure on the gauge. If system pressure of **39 psi ± 3** is observed, the relay, fuel pump, and regulator are working properly. Turn the key switch off and depress the valve button on the tester to relieve the system pressure.

   a. If the pressure is too high, and the regulator is outside the tank (just down line from the pump), check that the return line from the regulator to the tank is not kinked or blocked. If the return line is good, replace the regulator (see ''Regulator Service'' on page 5B.21).

   b. If the pressure is too low, install in-line ''T'' between the pump and regulator and retest the pressure at that point. If it is too low there also, replace the fuel pump.

3. If the pump did not activate (step 2), disconnect the plug from the fuel pump. Connect a DC voltmeter across the terminals in the plug, turn on the key switch and observe if a minimum of 7 volts is present. If voltage is between 7 and 14, turn key switch off and connect an ohmmeter between the terminals on the pump to check for continuity.

   a. If there was no continuity between the pump terminals, replace the fuel pump.

   b. If the voltage was below 7, test the wiring harness and relay as covered in the ''Electrical Relay'' section.

4. If voltage at the plug was good, and there was continuity across the pump terminals, reconnect the plug to the pump, making sure you have a good connection. Turn on the key switch and listen for the pump to activate.

   a. If the pump starts, repeat steps 1 and 2 to verify correct pressure.

   b. If the pump still does not operate, replace it.

Fuel Pressure Regulator

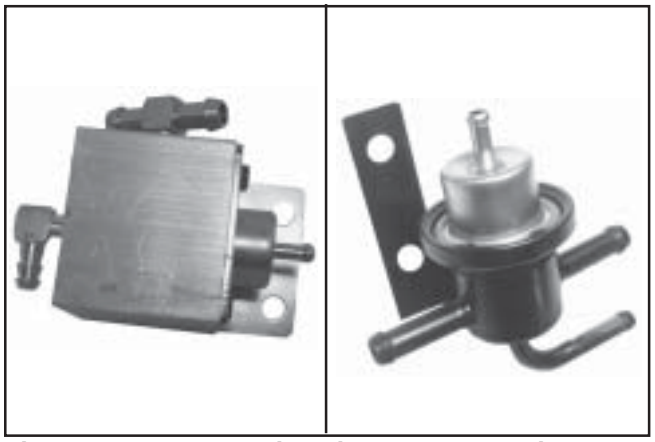

Figure 5B-27. External Fuel Pressure Regulators with Base.

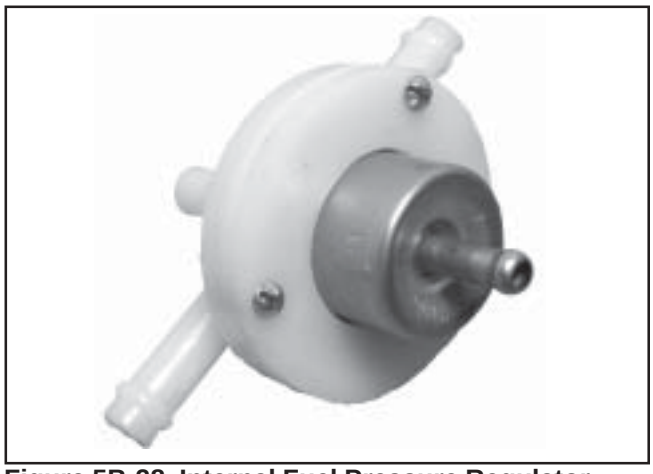

Figure 5B-28. Internal Fuel Pressure Regulator.

General

The fuel pressure regulator assembly maintains the required operating system pressure of **39 psi ± 3**. A rubber-fiber diaphragm (see Figure 5B-29) divides the regulator into two separate sections; the fuel chamber and the pressure regulating chamber. The pressure regulating spring presses against the valve holder (part of the diaphragm), pressing the valve against the valve seat. The combination of atmospheric pressure and regulating spring tension equals the desired operating pressure. Any time the fuel pressure against the bottom of the diaphragm exceeds the desired (top) pressure, the valve opens, relieving the excess pressure, returning the excess fuel back to the tank.

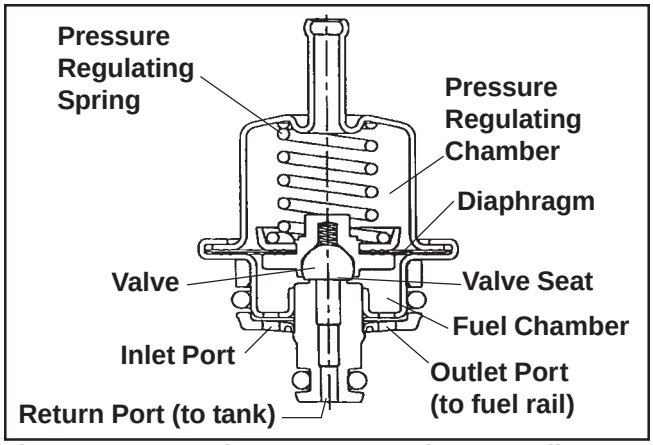

Figure 5B-29. Fuel Pressure Regulator Details.

Service

Depending on the application, the regulator may be located in the fuel tank along with the fuel pump, or outside the tank just down line from the pump. The regulator is a sealed, non-serviceable assembly. If it is faulty, it must be separated from the base/holder assembly and replaced as follows:

1. Shut engine off, make sure engine is cool, and disconnect the negative (-) battery cable.

2. Depressurize fuel system through test valve in fuel rail (see fuel warning on page 5B.2).

3. Access the regulator assembly as required and clean any dirt or foreign material away from the area.

4. **External Regulator -**
   Based upon the style of regulator used (see Figure 5B-30):

   a. Remove the two screws securing the mounting bracket to the regulator housing. Remove the O-Ring and pull the regulator out of the housing.

   b. Remove the snap ring and remove regulator from base/holder.

   Internal (In-Tank) Regulator -
   Remove the three screws securing the retaining ring and regulator in the base/holder assembly. Grasp and pull the regulator out of the base/holder. See Figure 5B-31.

Figure 5B-30. External Regulators and Base/Holders.

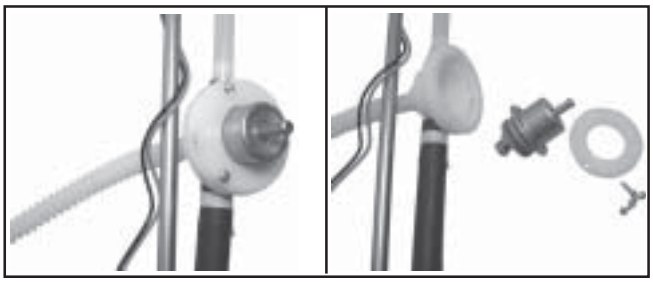

Figure 5B-31. Internal Regulator and Base/Holder.

5. Always use new O-Rings and hose clamps when installing a regulator. A new replacement regulator will have new O-Rings already installed. Lubricate the O-Rings (external regulator) with light grease or oil.

6. a. Install the new regulator by carefully pushing and rotating it slightly into the base or housing.

   b. External Regulators with Square Base Housing Only; Install a new O-Ring between the regulator and the mounting bracket. Set the mounting bracket into position.

   c. Secure the regulator in base with the original retaining ring or screws. Be careful not to dent or damage the body of the regulator as operating performance can be affected.

7. Reassemble any parts removed in step 3.

8. Reconnect the negative (-) battery cable.

9. Recheck regulated system pressure at fuel rail test valve.

Fuel Filter

EFI engines use a high-volume, high-pressure, 10-15 micron, in-line fuel filter.

Figure 5B-32. In-Line Fuel Filter.

Service

Fuel filter replacement is recommended every **1500 hours** of operation or more frequently under extremely dusty or dirty conditions. Use only the specified filter, and install it according to the directional arrows. **Do not** use a substitute filter as operating performance and safety can be affected. Relieve system pressure through the safety valve in the fuel rail before servicing.

Fuel Rail

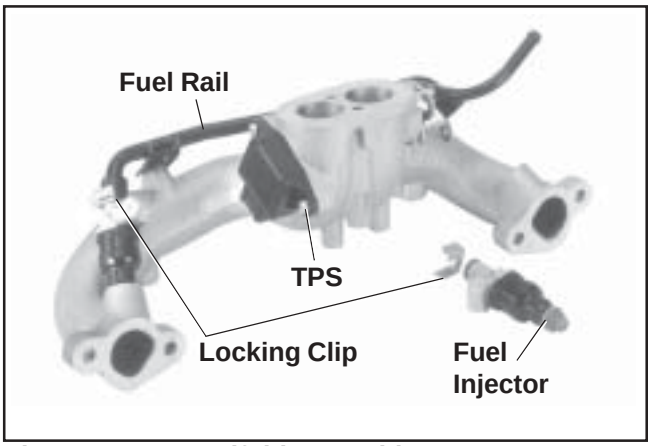

Figure 5B-33. Manifold Assembly.

General

The fuel rail is a formed tube assembly that feeds fuel to the top of the injectors. The tops of the injectors fit into formed cups in the fuel rail. When the rail is fastened to the manifold, the injectors are locked into place. A small retaining clip provides a secondary lock. Incorporated into the fuel rail is a pressure relief/test valve for testing operating pressure or relieving fuel system pressure for servicing. The fuel supply line is attached to the barbed end of the fuel rail with an Oetiker hose clamp.

Service

The fuel rail is mounted to the throttle body/intake manifold. It can be detached by removing the two mounting screws and the injector retaining clips. Thoroughly clean the area around all joints prior to any disassembly. No specific servicing is required unless operating conditions indicate that it needs internal cleaning or replacement.

Fuel Line

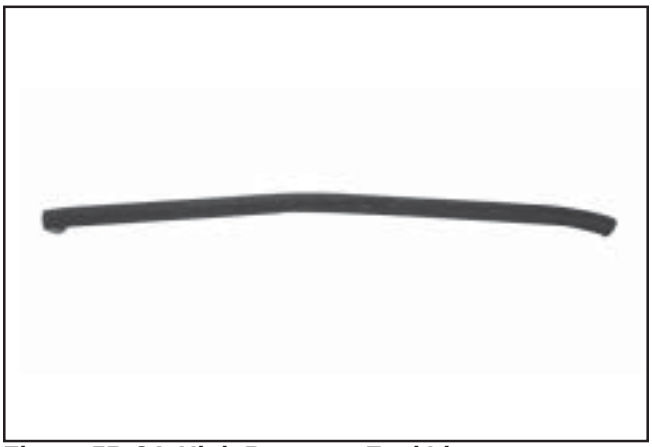

Figure 5B-34. High Pressure Fuel Line.

General

Special low permeation high-pressure fuel line with an SAE30 R9 rating is required for safe and reliable operation, due to the higher operating pressure of the EFI system. If hose replacement is necessary, order Fuel Line Service Kit, Part No. **25 111 37-S** (containing 60" of high-pressure hose and 10 Oetiker clamps), or use only the type specified. Special Oetiker clamps (Kohler Part No. **24 237 05-S**) are used on all fuel line connections to prevent tampering and safety hazards with the high fuel pressure. The old clamp must be cut to open a connection, so replacement is necessary each time. Oetiker Clamp Pliers (part of EFI Service Kit, see Section 2) is used to crimp the replacement clamps.

CAUTION:
Fuel lines between the fuel pump and fuel rail must be made from SAE 30 R9 fuel line. Standard fuel line (SAE 30 R7) may ***only*** *be used between the fuel tank and pump (5/16" ID) and for the return line from the pressure regulator to the tank (1/4" ID). All high-pressure fuel line connections must be secured with Oetiker Clamps (Kohler Part No. 24 237 05-S), installed/crimped with the corresponding pliers.*

Throttle Body/Intake Manifold Assembly

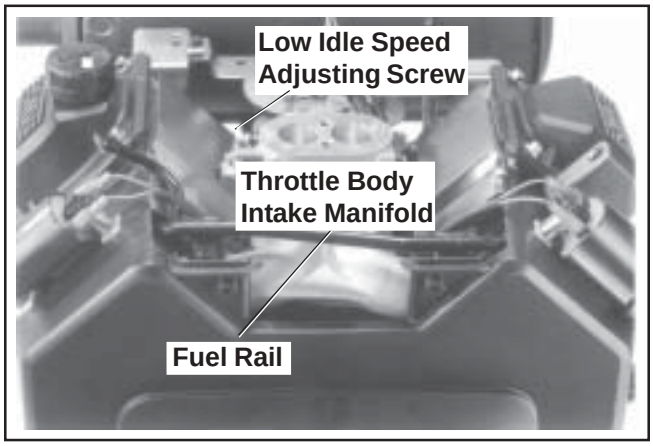

Figure 5B-35. Upper Intake Manifold.

General
The EFI engines have no carburetor, so the throttle function (regulate incoming combustion airflow) is incorporated in the intake manifold assembly. The manifold consists of a one-piece aluminum casting which also provides mounting for the fuel injectors, throttle position sensor, fuel rail, air baffle, idle speed screw, and air cleaner assembly.

Service
The throttle body/intake manifold is serviced as an assembly, with the throttle shaft, throttle plates, and idle speed adjusting screw installed. The throttle shaft rotates on needle bearings (non-serviceable), capped with rubber seals to prevent air leaks.

Idle Speed Adjustment (RPM)

General
The idle speed is the only adjustment that may be performed on the EFI system. The standard idle speed setting for EFI engines is 1500 RPM, but certain applications might require a different setting. Check the equipment manufacturer's recommendation.

For starting and warm up, the ECU will adjust the fuel and ignition timing, based upon ambient temperature, engine temperature, and loads present. In cold conditions, the idle speed will probably be higher than normal for a few moments. Under other conditions, the idle speed may actually start lower than normal, but gradually increase to the established setting as operation continues. **Do not** attempt to circumvent this warm up period, or readjust the idle speed during this time. The engine must be completely warmed up for accurate idle speed adjustment.

Adjustment Procedure
1. Make sure there are no fault codes present in the ECU memory.

2. Start the engine and allow it to **fully warm up** and establish closed looped operation (approximately 5-10 min.).

3. Place the throttle control in the ''idle/slow'' position and check the idle speed with a tachometer. Turn the idle speed screw in or out as required to obtain **1500 RPM**, or the idle speed specified by the equipment manufacturer.

4. The low idle speed adjustment can affect the high speed setting. Move the throttle control to the full throttle position and check the high speed. Adjust as necessary to 3750 RPM (no load), or the speed specified by the equipment manufacturer.

Idle Speed Screw Dampening Spring
A small dampening spring (Kohler Part No. **24 089 42-S**) is attached to the end of the idle speed screw of some EFI engines to help stabilize no load operating speeds. See Figure 5B-36.

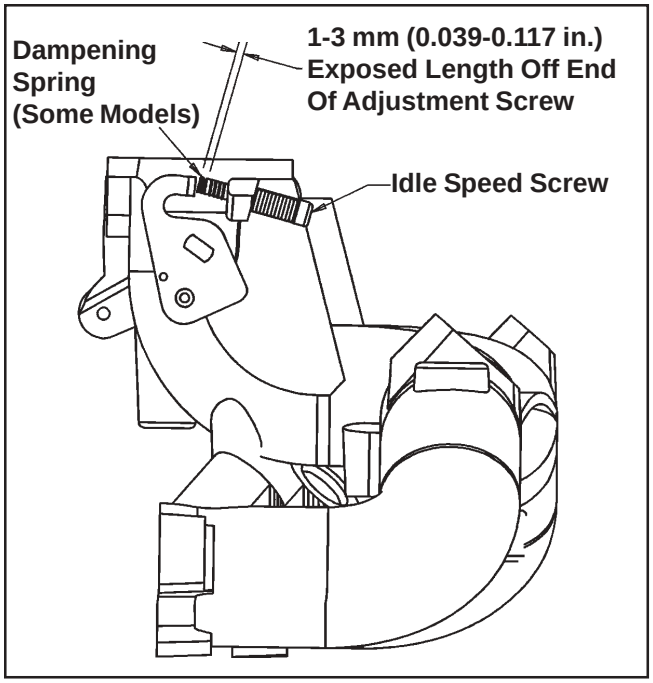

Figure 5B-36. Idle Speed Screw Details.

The idle speed adjustment procedure remains the same for engines with or without a dampening spring. Typically, no periodic servicing is necessary in this area. If however, removal/replacement of the dampening spring is required, reinstall it as follows:

1. Thread the spring onto the end of idle screw leaving **1-3 mm (0.039-0.117 in.)** of the spring extending beyond the end of the idle speed screw.

2. Secure spring onto the screw with a small amount of Permabond™ LM-737 or equivalent Loctite® adhesive. Do not get any adhesive on free coils of spring.

3. Start the engine and recheck the idle speed settings, after sufficient warm up. Readjust as required.

Initial Governor Adjustment

The initial governor adjustment is especially critical on EFI engines because of the accuracy and sensitivity of the electronic control system. Incorrect adjustment can result in overspeed, loss of power, lack of response, or inadequate load compensation. If you encounter any of these symptoms and suspect them to be related to the governor setting, the following should be used to check and/or adjust the governor and throttle linkage.

If the governor/throttle components are all intact, but you think there may be a problem with the adjustment, follow Procedure A to check the setting. If the governor lever was loosened or removed, go immediately to Procedure B to perform the initial adjustment.

A. Checking the Initial Adjustment

1. Unsnap the plastic linkage bushing attaching the throttle linkage to the governor lever. See Figure 5B-37. Unhook the damper spring from the lever, separate the linkage from the bushing, and remove the bushing from the lever. Mark the hole position and unhook the governor spring from the governor lever.

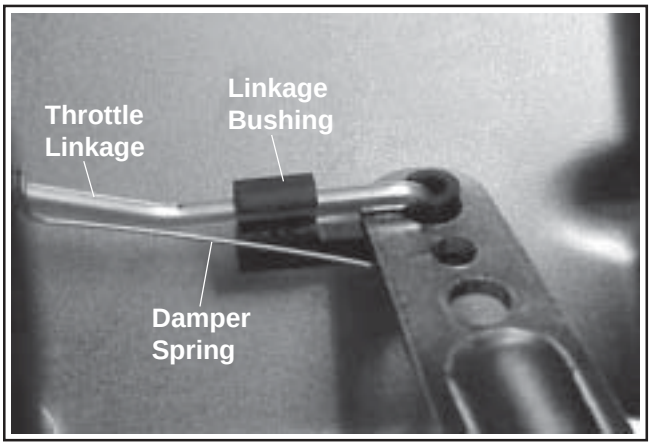

Figure 5B-37. Throttle Linkage/Governor Lever Connection.

2. Check if the engine has a high-speed throttle stop screw installed in the manifold casting boss. See Figure 5B-38.

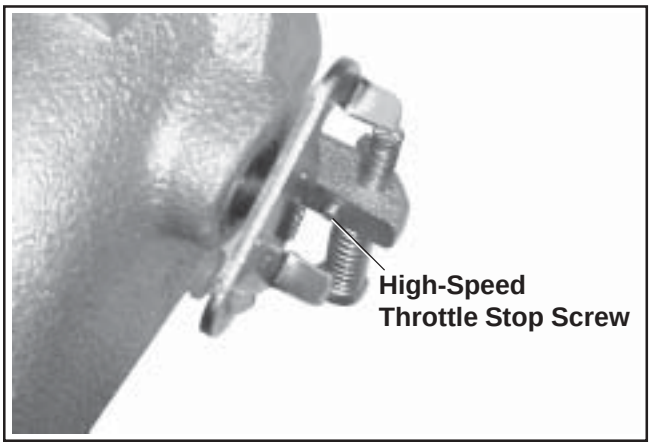

Figure 5B-38. Throttle Details.

a. On engines without a stop screw, pivot the throttle shaft and plate assembly into the "Full Throttle" position. Insert a **1.52 mm (0.060 in.)** feeler gauge between the rear tang of the throttle shaft plate and the underside of the manifold boss. Use a locking pliers (needle nose works best) to temporarily clamp the parts in this position. See Figure 5B-39.

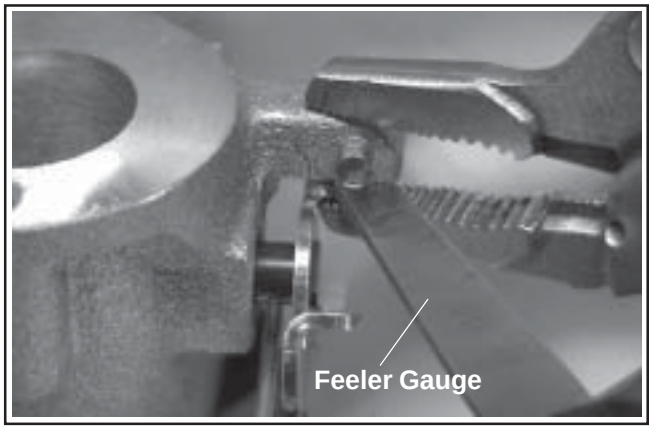

Figure 5B-39. Inserting Feeler Gauge (Engines Without Stop Screw).

b. On engines with a stop screw, pivot the throttle shaft and plate into the "Full Throttle" position, so the tang of the throttle shaft plate is against the end of the high-speed stop screw. See Figure 5B-38. Temporarily clamp in this position.

3. Rotate the governor lever and shaft counterclockwise until it stops. Use only enough pressure to hold it in that position.

4. Check how the end of the throttle linkage aligns with the bushing hole in the governor lever. See Figure 5B-40. It should fall in the center of the hole. If it doesn't, perform the adjustment procedure as follows.

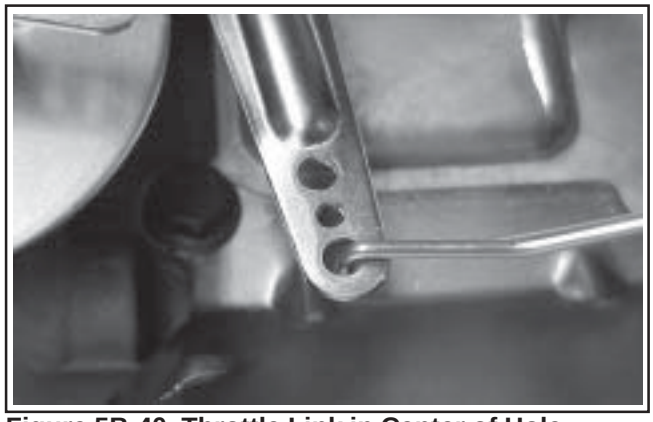

Figure 5B-40. Throttle Link in Center of Hole.

B. Setting the Initial Adjustment

1. Check the split where the clamping screw goes through the governor lever. See Figure 5B-41. There should be a gap of at least 1/32". If the tips are touching and there is no gap present, the lever should be replaced. If not already installed, position the governor lever on the cross shaft, but leave the clamping screw loose.

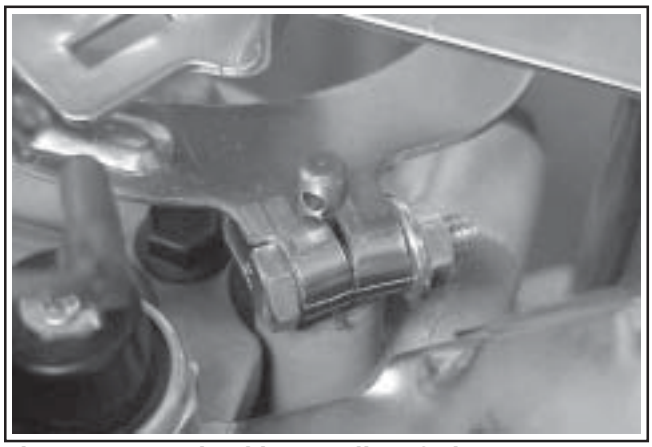

Figure 5B-41. Checking ''Split'' of Clamp.

2. Follow the instructions in Step 2 of ''Checking the Initial Adjustment,'' then reattach the throttle linkage to the governor lever with the bushing clip. It is not necessary to reattach the damper or governor springs at this time.

3. Insert a nail into the hole in the top of the cross shaft. Using light pressure, rotate the governor shaft counterclockwise as far as it will turn, then torque the hex nut on the clamping screw to **6.8 N·m (60 in. lb.)**. See Figure 5B-42. Make sure that the governor arm has not twisted up or down after the nut has been tightened.

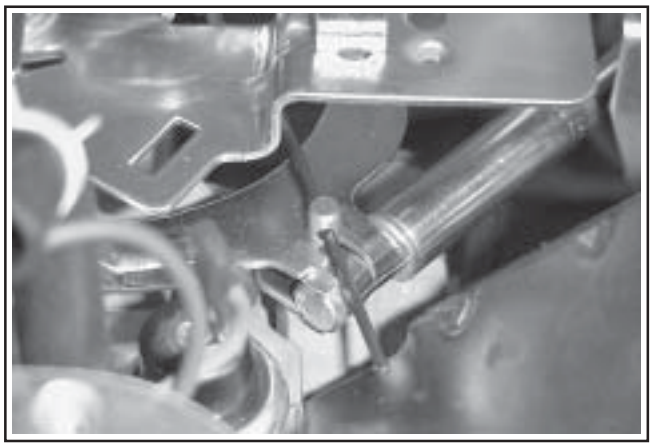

Figure 5B-42. Adjusting Governor Shaft.

4. Verify that the governor has been set correctly. With the linkage still retained in the “Full Throttle” position (Step 2), unsnap the bushing clip, separate the linkage from the bushing, and remove the bushing from the lever. Follow Steps 3 and 4 in ‘‘Checking the Initial Adjustment’’.

5. Reconnect the dampening spring into its governor lever hole from the bottom. Reinstall the bushing and reattach the throttle linkage. See Figure 5B-37. Reattach the governor spring in the marked hole.

6. Start the engine and allow it to fully warm up and establish closed loop operation (approximately 5-10 min.). Check the speed settings and adjust as necessary, first the low idle speed, and then the high speed setting.

Troubleshooting

General

When troubleshooting a problem on an engine with EFI, basic engine operating problems must be eliminated first before faulting the EFI system components. What appears to be an EFI problem could be something as simple as a fuel tank with debris in the bottom or a plugged vent. Be sure the engine is in good mechanical operating condition, and all other systems are functional before attempting to troubleshoot the EFI system.

Troubleshooting Guide

Engine starts hard or fails to start when cold

1. Fuel pump not running
2. Faulty spark plugs
3. Old/stale fuel
4. Incorrect fuel pressure
5. Speed sensor loose or faulty
6. TPS offset incorrect (initialization)
7. TPS faulty
8. Engine temperature sensor faulty
9. Faulty coils
10. Low system voltage
11. Faulty injectors

Engine starts hard or fails to start when hot

1. Faulty spark plugs
2. Fuel pump not running
3. Fuel pressure low
4. Insufficient fuel delivery
5. TPS offset incorrect (Initialization)
6. Speed sensor loose or faulty
7. TPS faulty
8. Engine temperature sensor faulty
9. Faulty injectors

Engine stalls or idles roughly (cold or warm)

1. Faulty spark plugs
2. Insufficient fuel delivery
3. TPS offset incorrect
4. TPS faulty
5. Faulty engine temperature sensor
6. Faulty injectors

Engine misses, hesitates, or stalls under load

1. Fuel injector(s), fuel filter, fuel line, or fuel pick-up dirty/restricted
2. Dirty air cleaner
3. Insufficient fuel pressure or fuel delivery
4. Vacuum (intake air) leak
5. Improper governor setting, adjustment or operation
6. Speed sensor malfunction
7. TPS faulty, mounting problem or "TPS Initialization Procedure" incorrect
8. Bad coil(s), spark plug(s), or wires

Low Power

1. Faulty/malfunctioning ignition system
2. Dirty air filter
3. Insufficient fuel delivery
4. Improper governor adjustment
5. Plugged/restricted exhaust
6. One injector not working
7. Basic engine problem exists
8. TPS faulty or mounting exists
9. Throttle plates in throttle body/intake manifold not fully opening to WOT stop (if so equipped)

Electrical System

The EFI system is a 12 VDC negative ground system, designed to operate down to a minimum of 7.0 volts. If system voltage drops below this level, the operation of voltage sensitive components such as the ECU, fuel pump, and injectors will be intermittent or disrupted, causing erratic operation or hard starting. A fully charged, 12 volt battery with a minimum of 350 cold cranking amps is important in maintaining steady and reliable system operation. Battery condition and state of charge should always be checked first when troubleshooting an operational problem.

Keep in mind that EFI-related problems are more often caused by the wiring harness or connections than by the EFI components. Even small amounts of corrosion or oxidation on the terminals can interfere with the milliamp currents used in system operation. Cleaning the connectors and grounds will solve problems in many cases. In an emergency situation, simply disconnecting and reconnecting the connectors may clean up the contacts enough to restore operation, at least temporarily.

If a fault code indicates a problem with an electrical component, disconnect the ECU connector and test for continuity between the component connector terminals and the corresponding terminals in the ECU connector using an ohmmeter. Little or no resistance should be measured, indicating that the wiring of that particular circuit is OK. An illustrated listing of numerical terminal locations, for each style of ECU/ connector is provided on pages 5B.28, 5B.31, or 5B.32.

5B.28 for “35 Pin” (MA 1.7) Metal-Cased ECU
5B.31 for “24 Pin” (MSE 1.0) Plastic-Cased ECU
5B.32 for “32 Pin” (MSE 1.1) Plastic-Cased ECU

NOTE: When performing voltage or continuity tests, avoid putting excessive pressure on or against the connector pins. Flat pin probes are recommended for testing to avoid spreading or bending the terminals.

“35 Pin” (MA 1.7) Metal-Cased ECU Systems

Pin #	Component
1	Ignition Coil #1
2	Not used
3	Engine Speed Sensor
4	ECU Production Test Terminal
5	Not Used
6	Not Used
7	Not Used
8	TPS Initialization Terminal
9	Engine Ground
10	O_2 Sensor
11	Not Used
12	Throttle Position Sensor
13	Not Used
14	Oil Temperature Sensor
15	Not Used
16	ECU Permanent Battery Voltage
17	ECU Switched Battery Voltage
18	Engine Ground
19	Ignition Coil #2
20	Vehicle Ground
21	Engine Speed Sensor
22	Not Used
23	Not Used
24	Not Used
25	Throttle Position Sensor
26	Not Used
27	Throttle Position Sensor/Oil Temperature Sensor
28	Power Relay
29	Not Used
30	Not Used
31	Malfunction Indicator Light
32	Not Used
33	Vehicle Ground
34	Not Used
35	Fuel Injectors

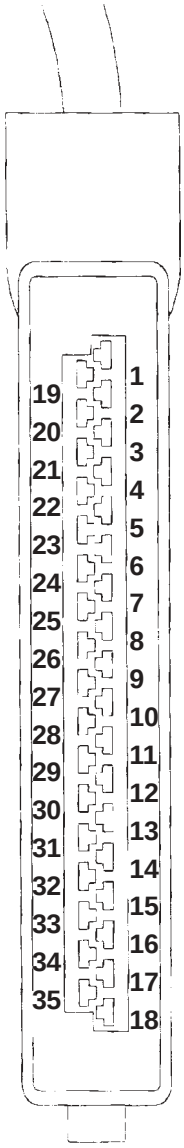

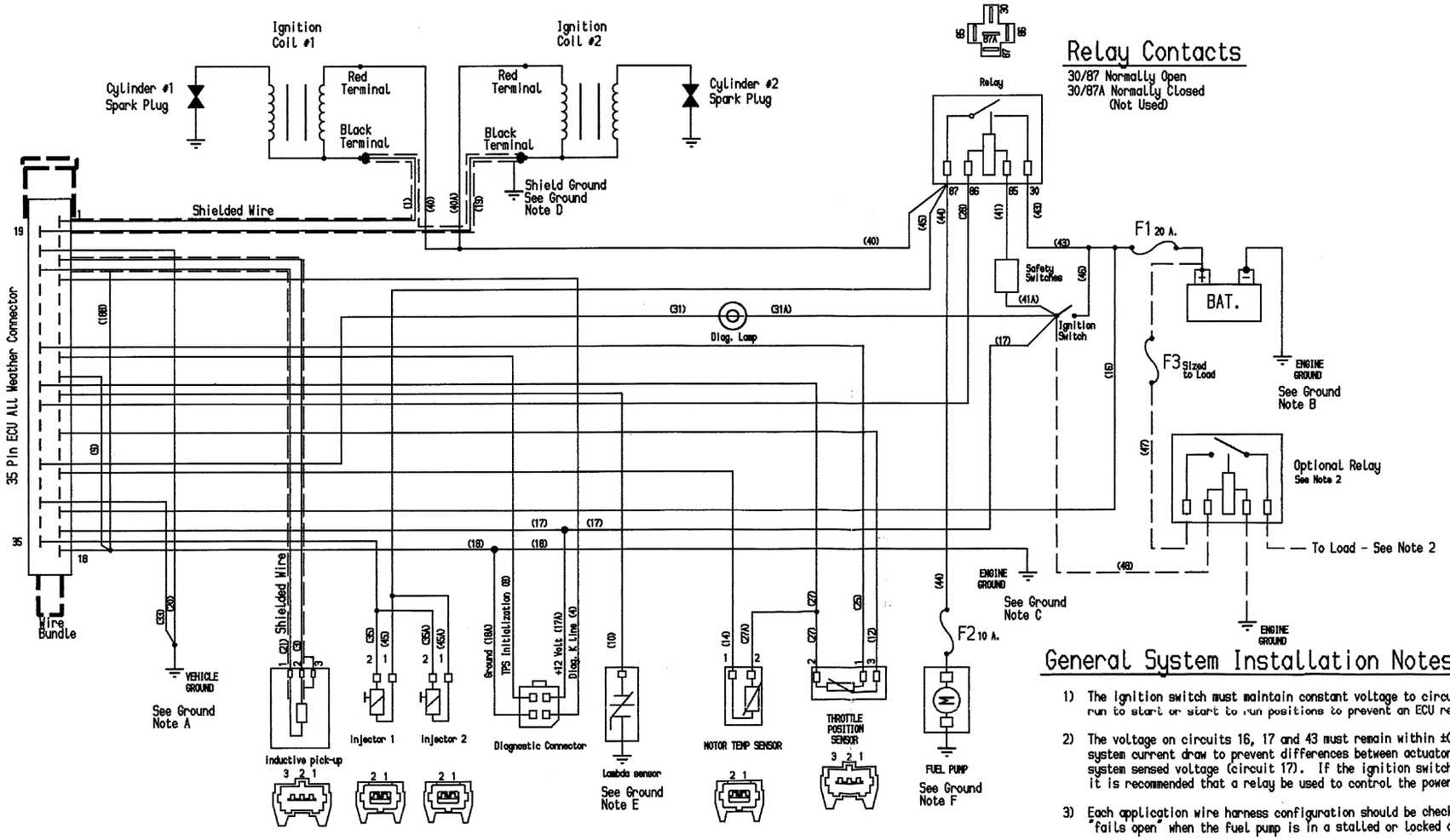

General System Installation Notes:

1) The ignition switch must maintain constant voltage to circuits 17, 31A, and 41A as the key is swept from run to start or start to run positions to prevent an ECU reset during starting.

2) The voltage on circuits 16, 17 and 43 must remain within ±0.2 volts of each other regardless of system current draw to prevent differences between actuator voltage (circuits 40, 44 and 45) and system sensed voltage (circuit 17). If the ignition switch controls a powered circuit (ie lights, horn), it is recommended that a relay be used to control the powered circuit as shown.

3) Each application wire harness configuration should be checked that the fuel pump fuse (F2) "fails open" when the fuel pump is in a stalled or locked condition.

4) A resistive spark plug with either a resistive spark plug wire or resistive spark plug boot must be used to prevent electrical system noise.

5) The safety switches are to be wired in series with the power relay.

6) It is recommended that the ECU be mounted vertically with the wire bundle down or horizontally with the All Weather connector down.

7) It is recommended that the ECU housing be grounded to the chassis. The ECU should not be mounted to the engine nor should it be powerwashed.

8) When not in operation, the battery must maintain a minimum system voltage of 7 volts with a current draw of 20mA to maintain adaptive memory.

9) During a start, the battery must maintain 7 volts minimum system voltage for ECU operation during crank.

9) Unless otherwise specified: All wires are 18 AWG.

Grounding Notes

Note	Item	Instruction
A	Injector/Ignition Output Driver	Attach to chassis as close to ECU as possible
B	Battery	Attach to engine block near starter
C	ECU	Attach to engine block near blower housing
D	Shield	Attach to engine block near Coil #2. Wire from shield to ground location to be as short as possible.
E	Lambda Sensor	The lambda grounds to the engine via the exhaust system. If a slip joint exhaust system is used, a grounding strap from the engine to the muffler near the lambda sensor is required.
F	Fuel Pump	Attach to chassis
.	.	

Connector J1

PIN	FUNCTION
1)	Battery Supply(Permanent)
2)	Switched Ignition
3)	Saftey Switch
4)	TPS & Temp Ground
5)	Not Used
6)	Motor Temp Input
7)	Spare A/D Input
8)	TPS Input
9)	VR Input (+)
10)	VR Input (-)
11)	Lambda Input
12)	Lambda Ground (if need)
13)	K-Line
14)	TPS Supply Voltage
15)	Battery Ground
16)	Injector 1 Output
17)	Injector 2 Output
18)	Pump Relay Output
19)	Diag Lamp Output
20)	Tach Output
21)	Spare output
22)	Ign1 output
23)	Ign2 output
24)	EOL / TPS set

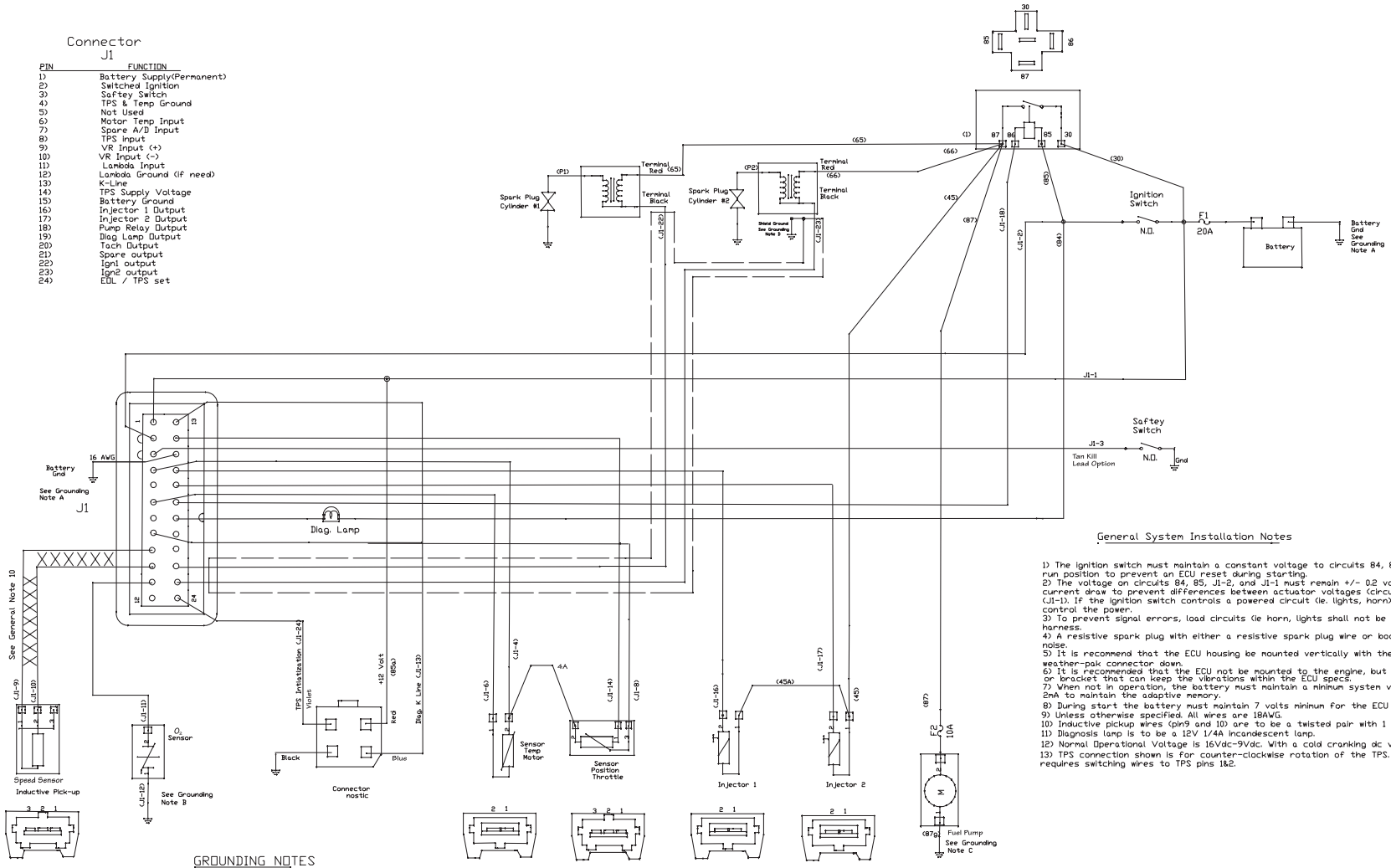

General System Installation Notes

1) The ignition switch must maintain a constant voltage to circuits 84, 85, and J1-2 as the key is swept from run position to prevent an ECU reset during starting.
2) The voltage on circuits 84, 85, J1-2, and J1-1 must remain +/- 0.2 volts of each other regardless of system current draw to prevent differences between actuator voltages (circuits 65, 66, 45, and 87) and system voltage (J1-1). If the ignition switch controls a powered circuit (ie. lights, horn) it is recommended that a relay be used to control the power.
3) To prevent signal errors, load circuits (ie horn, lights shall not be powered from the EFI engine or wire chassis harness.
4) A resistive spark plug with either a resistive spark plug wire or boot must be used to prevent electrical system noise.
5) It is recommend that the ECU housing be mounted vertically with the wire bundle down or horizontally with the weather-pak connector down.
6) It is recommended that the ECU not be mounted to the engine, but be attached it an isolator plate or or bracket that can keep the vibrations within the ECU specs.
7) When not in operation, the battery must maintain a minimum system voltage of 7 volts with a current draw of 2mA to maintain the adaptive memory.
8) During start the battery must maintain 7 volts minimum for the ECU operations during crank.
9) Unless otherwise specified. All wires are 18AWG.
10) Inductive pickup wires (pin9 and 10) are to be a twisted pair with 1 twist per inch.
11) Diagnosis lamp is to be a 12V 1/4A incandescent lamp.
12) Normal Operational Voltage is 16Vdc-9Vdc. With a cold cranking dc voltage of 7Volts.
13) TPS connection shown is for counter-clockwise rotation of the TPS. Clockwise rotaion requires switching wires to TPS pins 1&2.

GROUNDING NOTES

Note	Item	Instruction
A	Battery	Attached to engine block near starter
B	Lambda Sensor	The sensor grounds to the engine via the muffler. If two leaded sensor is used pin 12 is lambda ground. If aslip joint is used, a grounding strap is required.
C	Fuel Pump	Attached to chassis.
D	Shield	Attached to engine block close to the coil.

“24 Pin” (MSE 1.0) Plastic-Cased ECU Systems

Pin #	Function
1	Permanent Battery Voltage
2	Switched Ignition Voltage
3	Safety Switch
4	Throttle Position Sensor (TPS) and Temperature Sensor Ground
5	Not Used
6	Oil Temperature Sensor Input
7	Not Used
8	Throttle Position Sensor (TPS) Input
9	Speed Sensor Input
10	Speed Sensor Ground
11	Oxygen Sensor Input
12	Not Used (Oxygen Sensor Ground if needed)
13	Diagnostic Line
14	Throttle Position Supply Voltage
15	Battery Ground
16	Injector 1 Output
17	Injector 2 Output
18	Main Relay Output
19	Malfunction Indicator Light (MIL)
20	Not Used (Tach Output if needed)
21	Not Used
22	Ignition Coil #1 Output
23	Ignition Coil #2 Output
24	TPS Initialization Terminal

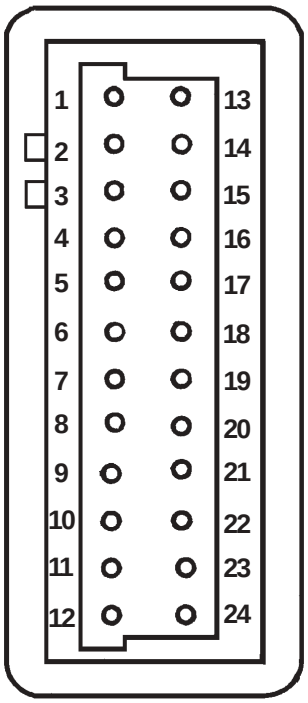

5B

“32 Pin” (MSE 1.1) Plastic-Cased ECU Systems

Pin #	Function
1	Permanent Battery Voltage
2	Switched Battery Voltage
3	TPS Set; “Auto-Learn” Initialization Terminal
4	Throttle Position Sensor (TPS) and Temperature Sensor Ground
5	Not Used
6	Oil Temperature Sensor Input
7	Not Used
8	Throttle Position Sensor (TPS) Input
9	Speed Sensor Input (+)
10	Speed Sensor Ground (-)
11	Not Used
12	Not Used
13	Not Used
14	Injector 1 Output
15	Injector 2 Output
16	Not Used
17	Diagnostic Line
18	Throttle Position Sensor Supply Voltage
19	Battery Ground
20	Oxygen Sensor Input
21	Battery Ground (Secondary)
22	Not Used
23	Not Used
24	Not Used
25	Safety Switch Input
26	Not Used
27	Not Used
28	Main Relay Output
29	Malfunction Indicator Light (MIL)
30	Ignition Coil #1 Output
31	Ignition Coil #2 Output
32	Not Used

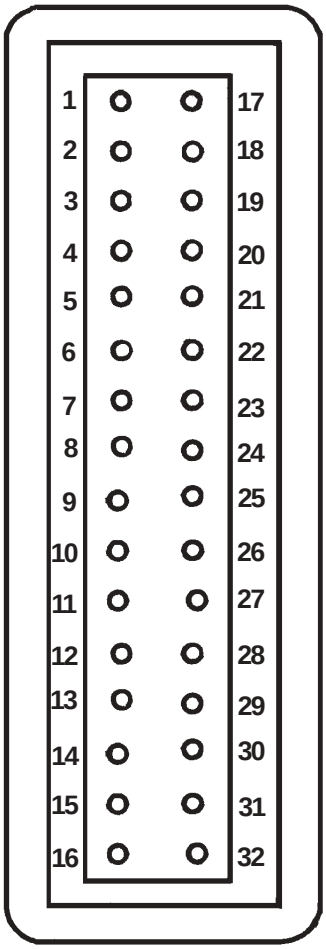

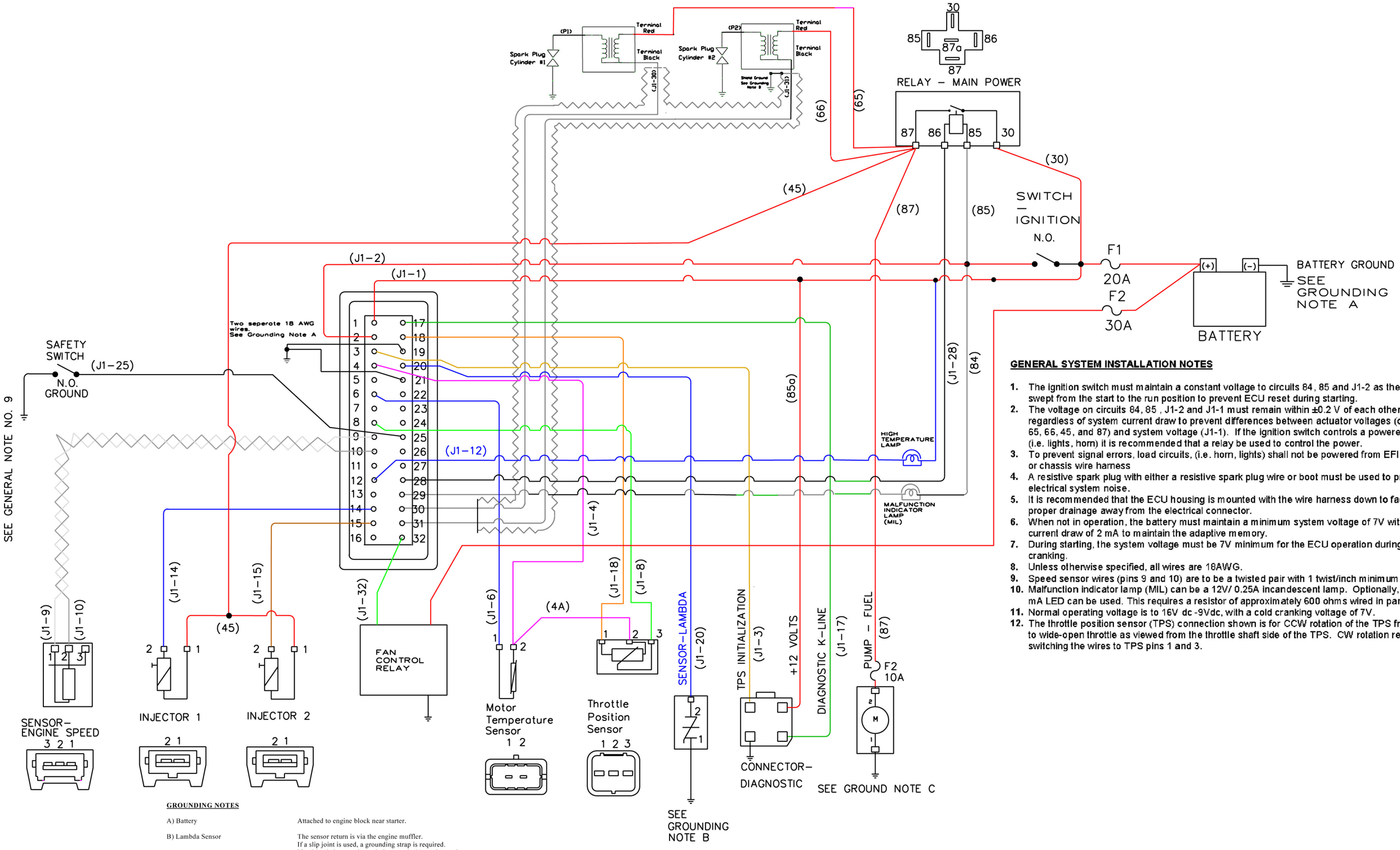

GENERAL SYSTEM INSTALLATION NOTES

1. The ignition switch must maintain a constant voltage to circuits 84, 85 and J1-2 as the key is swept from the start to the run position to prevent ECU reset during starting.
2. The voltage on circuits 84, 85 , J1-2 and J1-1 must remain within ±0.2 V of each other regardless of system current draw to prevent differences between actuator voltages (circuits 65, 66, 45, and 87) and system voltage (J1-1). If the ignition switch controls a powered circuit (i.e. lights, horn) it is recommended that a relay be used to control the power.
3. To prevent signal errors, load circuits, (i.e. horn, lights) shall not be powered from EFI engine or chassis wire harness
4. A resistive spark plug with either a resistive spark plug wire or boot must be used to prevent electrical system noise.
5. It is recommended that the ECU housing is mounted with the wire harness down to facilitate proper drainage away from the electrical connector.
6. When not in operation, the battery must maintain a minimum system voltage of 7V with a current draw of 2 mA to maintain the adaptive memory.
7. During starting, the system voltage must be 7V minimum for the ECU operation during cranking.
8. Unless otherwise specified, all wires are 18AWG.
9. Speed sensor wires (pins 9 and 10) are to be a twisted pair with 1 twist/inch minimum.
10. Malfunction indicator lamp (MIL) can be a 12V/ 0.25A incandescent lamp. Optionally, a 20 mA LED can be used. This requires a resistor of approximately 600 ohms wired in parallel.
11. Normal operating voltage is to 16V dc -9Vdc, with a cold cranking voltage of 7V.
12. The throttle position sensor (TPS) connection shown is for CCW rotation of the TPS from idle to wide-open throttle as viewed from the throttle shaft side of the TPS. CW rotation requires switching the wires to TPS pins 1 and 3.

GROUNDING NOTES

A) Battery	Attached to engine block near starter.
B) Lambda Sensor	The sensor return is via the engine muffler. If a slip joint is used, a grounding strap is required. If a 2 leaded sensor is used pin 4 or pin 21 can be used for the is the return.
C) Fuel Pump	Attached to the chassis
D) Shield	Attached to the engine block close to the coils.

Fuel System

WARNING: Fuel System Under Pressure!
The fuel system operates under high pressure. System pressure must be relieved through the test valve in the fuel rail prior to servicing or removing any fuel system components. Do not smoke or work near heaters or other fire hazards. Have a fire extinguisher handy and work only in a well-ventilated area.

The function of the fuel system is to provide sufficient delivery of fuel at the system operating pressure of 39 psi ± 3. If an engine starts hard, or turns over but will not start, it may indicate a problem with the EFI fuel system. A quick test will verify if the system is operating.

1. Disconnect and ground the spark plug leads.

2. Complete all safety interlock requirements and crank the engine for approximately 3 seconds.

3. Remove the spark plugs and check for fuel at the tips.

   a. If there is fuel at the tips of the spark plugs, the fuel pump and injectors are operating.

   b. If there is no fuel at the tips of the spark plugs, check the following:

      1. Make sure the fuel tank contains clean, fresh, proper fuel.

      2. Make sure that vent in fuel tank is open.

      3. Make sure fuel tank valve (if so equipped) is fully opened.

      4. Make sure battery is supplying proper voltage.

      5. Check that the fuses are good, and that all electrical and fuel line connections are good.

      6. Test fuel pump and relay operation as described earlier under ''Fuel Pump – Service.''

Fault Codes

The ECU continuously monitors engine operation against preset performance limits. If the operation is outside the limits, the ECU activates the MIL and stores a diagnostic code in its fault memory. If the component or system returns to proper function, the ECU will eventually self-clear the fault code and turn off the MIL. If the MIL stays illuminated, it warns the customer that dealer service is required. Upon receipt, the dealer technician can access the fault code(s) to help determine what portion of the system is malfunctioning. The 2-digit blink codes available based upon the style of ECU are listed on pages 5B.35-5B.36.

The codes are accessed through the key switch and displayed as blinks or flashes of the MIL. Access the codes as follows:

1. Start with the key switch off.

2. Turn the key switch on-off-on-off-on, leaving it on in the third sequence. The time between sequences must be less than 2.5 seconds.

3. Any stored fault codes will then be displayed as a series of MIL blinks (from 2 to 6) representing the first digit, followed by a pause, and another series of blinks (from 1 to 6) for the second digit (see Figure 5B-43).

   a. It's a good idea to write down the codes as they appear, as they may not be in numerical sequence.

   b. Code 61 will always be the last code displayed, indicating the end of code transmission. If code 61 appears immediately, no other fault codes are present.

Example of Diagnostic Display

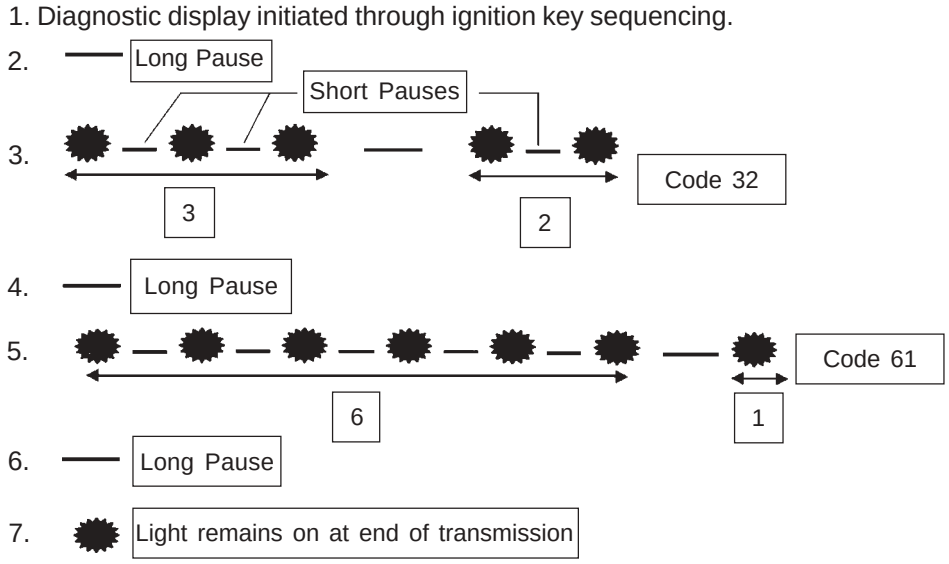

Figure 5B-43.

After the problem has been corrected, the fault codes may be cleared as follows.

1. Disconnect the negative (-) battery cable from battery terminal, or remove the main fuse for the ECU for approximately 1 minute.

2. Reconnect the cable and tighten securely, or reinstall the main fuse. Start the engine and allow it to run for several minutes. The MIL should remain off if the problem was corrected, and the fault codes should not reappear (codes 31, 32, 33, and 34 may require 10-15 minutes of running to reappear).

The following chart lists the fault codes, what they correspond to, and what the visual indications will be. Following the chart is a list of the individual codes with an explanation of what triggers them, what symptoms might be expected, and the probable causes.

Diagnostic Code Summary

Blink Code	OBD2 P-Code Applicable to: "32 Pin" (MSE 1.1) ECU/System Only	Connection or Failure Description	"35 Pin" (MA 1.7) Metal-Cased ECU/System	"24 Pin" (MSE 1.0) Plastic-Cased ECU/System	"32 Pin" (MSE 1.1) Plastic-Cased ECU/System	Note
-	-	No RPM Signal	Y	Y	Y	
21	P0335	Loss of Synchronization	Y	Y	Y	
22	P0120	TPS - Signal Implausible	N	N	N	2
22	P0122	TPS - Open or Short Circuit to Ground	Y	Y	Y	
22	P0123	TPS - Short Circuit to Battery	Y	Y	Y	
23	P0601	Defective ECU	Y	Y	Y	
24		Engine Speed Sensor	Y	Y	Y	9
31	P0174	System too Lean	Y	Y	Y	6

cont. on next page

Blink Code	OBD2 P-Code Applicable to: "32 Pin" (MSE 1.1) ECU/System Only	Connection or Failure Description	"35 Pin" (MA 1.7) Metal-Cased ECU/System	"24 Pin" (MSE 1.0) Plastic-Cased ECU/System	"32 Pin" (MSE 1.1) Plastic-Cased ECU/System	Note
31	P0132	O_2 Sensor Circuit: Shorted to Battery	Y	N	Y	3
32	P0134	O_2 Sensor Circuit: No Activity Detected	N	N	N	8
33	P0175	System too Rich	Y	Y	Y	7,8
33	P0020	O_2 Sensor Control at Upper Limit	Y	Y	Y	8
34	P0171	Maximum Adaption Limit Reached	Y	Y	Y	8
34	P0172	Minimum Adaption Limit Reached	Y	Y	Y	8
42	P0117	Temperature Sensor Circuit: Shorted to Ground	Y	Y	Y	
42	P0118	Temperature Sensor Circuit: Open Circuit or Short to Battery	Y	Y	Y	
43	N/A	Failure Completing Autolearn - TPS Offset below minimum allowable limit	N/A	N/A	Y	
44	N/A	Failure Completing Autolearn - TPS offset above maximum allowable limit	N/A	N/A	Y	
51	P1260	Injector 1 - Open Circuit	N/A	N/A	Y	
51	P0261	Injector 1 - Short Circuit to Ground	N/A	N/A	Y	
51	P0262	Injector 1 - Short Circuit to Battery	N/A	N/A	Y	
52	P1263	Injector 2 - Open Circuit	N/A	N/A	Y	
52	P0264	Injector 2 - Short Circuit to Ground	N/A	N/A	Y	
52	P0265	Injector 2 - Short Circuit to Battery	N/A	N/A	Y	
55	P1651	Diagnostic Lamp - Open Circuit	N/A	N/A	Y	
55	P1652	Diagnostic Lamp - Short Circuit to Ground	N/A	N/A	Y	
55	P1653	Diagnostic Lamp - Short Circuit to Battery	N/A	N/A	Y	
56	P1231	Pump Relay - Open Circuit	N/A	N/A	Y	
56	P1232	Pump Relay - Short Circuit to Ground	N/A	N/A	Y	
56	P1233	Pump Relay - Short Circuit to Battery	N/A	N/A	Y	
61		End of Code Transmission	Y	Y	Y	

Note:

1. Idle Switch not used.
2. Diagnostic of "TPS - Signal Implausible" is disabled in code.
3. "O_2 Sensor Short to Battery" diagnostic detection is disabled with SAS fuel-cutoff calibrated out.
4. Air Temperature Sensor not used.
5. "Temperature Sensor Signal Implausible": diagnostic detection is calibrated out, with TPLAUS set to -50°C.
6. System too Lean used to be "O_2 Sensor - Short to Ground (P0131)."
7. "System too Rich" used to be "O_2 Sensor Control at Lower Limit (P0019)."
8. Obtainable only with ECU 24 584 28-S or later.
9. Will not blink out.

Code: **21**
Source: Engine Speed Sensor
Explanation: ECU receiving inconsistent tooth count signals from speed sensor.
Expected Engine Response: Possible misfire as ECU attempts to resynchronize, during which time fuel and spark calculations are not made.

Possible Causes:

1. Engine Speed Sensor Related
   a. Sensor connector or wiring.
   b. Sensor loose or incorrect air gap.
   c. Flywheel key sheared.

2. Speed Sensor Ring Gear Related
   a. Damaged teeth.
   b. Varying gap (gear loose/out of alignment).

3. Engine Wiring Harness Related
   "35 Pin" (MA 1.7) Metal-Cased ECU:
   a. Pin circuits 3 and/or 21 wiring or connectors.
   b. Shielding for pin circuits 3 and/or 21 damaged or not properly grounded.
   c. Poor or improper grounds in system (battery, ECU, oxygen sensor, shielding, fuel pump, ignition output).
   d. Pin circuits 3 and/or 21 routed near noisy electrical signals (coils, spark plug lead, plug connector).

3. Engine Wiring Harness Related
   "24 Pin" (MSE 1.0) Plastic-Cased ECU:
   a. Pin circuits 9 and/or 10 wiring or connectors.
   b. Shielding for pin circuits 9 and/or 10 damaged or not properly grounded.
   c. Poor or improper grounds in system (battery, ECU oxygen sensor, shielding, fuel pump, ignition output).
   d. Pin circuits 9 and/or 10 routed near noisy electrical signals (coils, spark plug lead, plug connector).

3. Engine Wiring Harness Related
   "32 Pin" (MSE 1.1) Plastic-Cased ECU:
   a. Pin circuits 9 and/or 10 wiring or connectors.
   b. Shielding for pin circuits 9 and/or 10 damaged or not properly grounded.
   c. Poor or improper grounds in system (battery, ECU, oxygen sensor, shielding, fuel pump, ignition output).
   d. Pin circuits 9 and/or 10 routed near noisy electrical signals (coils, spark plug lead, plug connector).

4. ECU/Harness Related
   a. ECU-to-harness connection problem.

5. Ignition System Related
   a. Non-resistor spark plug(s) used.

Code: **22**
Source: Throttle Position Sensor (TPS)
Explanation: Unrecognizable signal is being sent from sensor (too high, too low, inconsistent).
Expected Engine Response: A "limp-home" operating mode occurs, with an overall decrease in operating performance and efficiency. Fuel delivery is based upon the oxygen sensor and five mapped values only. Rich running (black smoke) will occur until "closed loop" operation is initiated. A stumble or misfire on hard acceleration and/or erratic operation may be exhibited.

Possible Causes:

1. TPS Sensor Related
   a. Sensor connector or wiring.
   b. Sensor output affected or disrupted by dirt, grease, oil, wear, or breather tube position (must be to side opposite the TPS).
   c. Sensor loose on throttle body manifold.

2. Throttle Body Related
   a. Throttle shaft or bearings worn/damaged.

3. Engine Wiring Harness Related
   "35 Pin" (MA 1.7) Metal-Cased ECU:
   a. Pin circuits 12, 25 and/or 27 damaged (wiring or connectors).
   b. Pin circuits 12, 25 and/or 27 routed near noisy electrical signal (coils, alternator).
   c. Intermittent 5 volt source from ECU (pin circuit 25).

3. Engine Wiring Harness Related
   "24 Pin" (MSE 1.0) Plastic-Cased ECU:
   a. Pin circuits 4, 8, and/or 14 damaged (wiring, connectors).
   b. Pin circuits 4, 8, and/or 14 routed near noisy electrical signal (coils, alternator).
   c. Intermittent 5 volt source from ECU (pin circuit 14).

3. Engine Wiring Harness Related
   "32 Pin" (MSE 1.1) Plastic-Cased ECU:
   a. Pin circuits 4, 8, and/or 18 damaged (wiring, connectors).
   b. Pin circuits 4, 8, and/or 18 routed near noisy electrical signal (coils, alternator).
   c. Intermittent 5 volt source from ECU (pin circuit 18).

4. ECU/Harness Related
   a. ECU-to-harness connection problem.

Code: **23**
Source: ECU
Explanation: ECU is unable to recognize or process signals from its memory.
Expected Engine Response: Engine will not run.

Possible Causes:
1. ECU (internal memory problem).
   a. Diagnosable only through the elimination of all other system/component faults.

Code: **24** (Will not blink out)
Source: Engine Speed Sensor
Explanation: No tooth signal from speed sensor. MIL light will not go out when cranking.
Expected Engine Response: None-engine will not start or run as ECU is unable to estimate speed.

Possible Causes:
1. Engine Speed Sensor Related
   a. Sensor connector or wiring.
   b. Sensor loose or air gap incorrect.

2. Speed Sensor Wheel Related
   a. Damaged teeth.
   b. Gap section not registering.

3. Engine Wiring Harness Related
   a. Pin circuit wiring or connectors.
   Pin(s) 3 and/or 21 for **"35 Pin" (MA 1.7) Metal-Cased ECU**.
   Pin(s) 9 and/or 10 for **"24 Pin" (MSE 1.0) Plastic-Cased ECU**.
   Pin(s) 9 and/or 10 for **"32 Pin" (MSE 1.1) Plastic-Cased ECU**.

4. ECU/Harness Related
   a. ECU-to-harness connection problem.

Code: **31**
Source: Fuel Mixture or Oxygen Sensor
Explanation: "System too lean." Oxygen sensor not sending expected voltage to ECU.
Expected Engine Response: System operates under "open loop" control only. Until fault is detected and registered by ECU, engine will run richif oxygen sensor is shorted to ground or lean if it is shorted to battery voltage. After fault is detected, performance can vary, depending on cause. If performance is pretty good, the problem is probably with the oxygen sensor, wiring, or connectors. If the engine is still running rich (laboring, short on power) or lean (popping or misfiring), the fuel mixture is suspect, probably incorrect TPS initialization or low fuel pressure.

Possible Causes:
1. TPS Initialization Incorrect
   a. Lean condition (check oxygen sensor signal with VOA and see Oxygen Sensor section).

2. Engine Wiring Harness Related
   a. Pin circuit wiring or connectors.
   Pin 10 for **"35 Pin" (MA 1.7) Metal-Cased ECU**.
   Pin 11 for **"24 Pin" (MSE 1.0) Plastic-Cased ECU.**
   Pin 20 for **"32 Pin" (MSE 1.1) Plastic-Cased ECU**.

3. Low Fuel Pressure

4. Oxygen Sensor Related
   a. Sensor connector or wiring problem.
   b. Exhaust leak.
   c. Poor ground path to engine (sensor is case grounded).

5. Poor system ground from ECU to engine, causing rich running while indicating lean.

Code: **32**
Source: Oxygen Sensor
Explanation: No change in the sensor output signal.
Expected Engine Response: "Open loop" operation only, may cause a drop in system performance and fuel efficiency.

Possible Causes:
1. Engine Wiring Harness Related
   a. Pin circuit wiring or connectors.
   Pin 10 for **"35 Pin" (MA 1.7) Metal-Cased ECU**.
   Pin 11 for **"24 Pin" (MSE 1.0) Plastic-Cased ECU**.
   Pin 20 for **"32 Pin" (MSE 1.1) Plastic-Cased ECU**.

2. Oxygen Sensor Related
   a. Sensor connector or wiring problem.
   b. Sensor contaminated or damaged.
   c. Sensor below the minimum operating temperature (375°C, 709°F).
   d. Poor ground path from sensor to engine (sensor grounds through shell, see Oxygen Sensor section).

Code: **33**
Source: Oxygen Sensor/Fuel System
Explanation: "System too rich." Temporary fuel adaptation control is at the upper limit.
Expected Engine Response: Erratic performance. Will run rich (smoke).

Possible Causes:
1. Fuel Supply Related (nothing lean – only rich)
   a. Restricted return line causing excessive fuel pressure.
   b. Fuel inlet screen plugged (in-tank fuel pump only).
   c. Incorrect fuel pressure at fuel rail.

2. Oxygen Sensor Related
   a. Sensor connector or wiring problem.
   b. Sensor contaminated or damaged.
   c. Exhaust leak.
   d. Poor ground path.
   e. Pin circuit wiring or connectors.
   Pin 10 for **"35 Pin" (MA 1.7) Metal-Cased ECU**.
   Pin 11 for **"24 Pin" (MSE 1.0) Plastic-Cased ECU**.
   Pin 20 for **"32 Pin" (MSE 1.1) Plastic-Cased ECU**.

3. TPS Sensor Related
   a. Throttle plate position incorrectly set or registered during "Initialization.''
   b. TPS problem or malfunction.

4. Engine Wiring Harness Related
   a. Difference in voltage between sensed voltage (pin circuit 17 for metal-cased ECU, pin circuit 2 for plastic-cased ECU) and actual injector voltage (circuit 45/45A).

5. Systems Related
   a. Ignition (spark plug, plug wire, ignition coil.
   b. Fuel (fuel type/quality, injector, fuel pump, fuel pressure.
   c. Combustion air (air cleaner dirty/restricted, intake leak, throttle bores).
   d. Base engine problem (rings, valves).
   e. Exhaust system leak.
   f. Fuel in the crankcase oil.
   g. Blocked or restricted fuel return circuit to tank.

6. ECU/Harness Related
   a. ECU-to-harness connection problem.

Code: **34**
Source: Oxygen Sensor/Fuel System Components
Explanation: Long term fuel adaptation control is at the upper or lower limit.
Expected Engine Response: System operates "closed loop." No appreciable performance loss as long as the temporary adaptation can provide sufficient compensation.

Possible Causes:
1. Oxygen Sensor Related
   a. Sensor connector or wiring problem.
   b. Sensor contaminated or damaged.
   c. Exhaust leak.
   d. Poor ground path.
   e. Pin circuit wiring or connectors.
   Pin 10 for **"35 Pin" (MA 1.7) Metal-Cased ECU**.
   Pin 11 for **"24 Pin" (MSE 1.0) Plastic-Cased ECU**.
   Pin 20 for **"32 Pin" (MSE 1.1) Plastic-Cased ECU**.

2. TPS Sensor Related
   a. Throttle plate position incorrect during "Initialization" procedure.
   b. TPS problem or malfunction.

3. Engine Wiring Harness Related
   a. Difference in voltage between sensed voltage (pin circuit 17 for metal-cased ECU, pin circuit 2 for plastic-cased ECU) and actual injector voltage (circuit 45/45A).
   b. Problem in wiring harness.
   c. ECU-to-harness connection problem.

4. Systems Related
   a. Ignition (spark plug, plug wire, ignition coil.
   b. Fuel (fuel type/quality, injector, fuel pressure, fuel pump).
   c. Combustion air (air cleaner dirty/restricted, intake leak, throttle bores).
   d. Base engine problem (rings, valves).
   e. Exhaust system leak (muffler, flange, oxygen sensor mounting boss, etc.).
   f. Fuel in the crankcase oil.
   g. Altitude.
   h. Blocked or restricted fuel return circuit to tank.

Code: **42**
Source: Engine (Oil) Temperature Sensor
Explanation: Not sending proper signal to ECU.
Expected Engine Response: Engine may be hard to start because ECU can't determine correct fuel mixture.

Possible Causes:
1. Temperature Sensor Related.
   a. Sensor wiring or connection.

2. Engine Wiring Harness Related
   "35 Pin" (MA 1.7) Metal-Cased ECU:
   a. Pin circuits 14 and/or 27A damaged (wires, connectors) or routed near noisy signal (coils, alternator, etc.).
   b. ECU-to-harness connection problem.

2. Engine Wiring Harness Related
   "24 Pin" (MSE 1.0) Plastic-Cased ECU:
   a. Pin circuits 4, 6 and/or 4A damaged (wires, connectors) or routed near noisy signal (coils, alternator, etc.).
   b. ECU-to-harness connection problem.

2. Engine Wiring Harness Related
   "32 Pin" (MSE 1.1) Plastic-Cased ECU:
   a. Pin circuits 4, 6 and/or (4A) damaged (wires, connectors) or routed near noisy signal (coils, alternator, etc.).
   b. ECU-to-harness connection problem.

3. System Related
   a. Engine is operating above the 176°C (350°F) temperature sensor limit.

Code: **43 and 44** **"32 Pin" (MSE 1.1) Plastic- Cased ECU only.**
Source: TPS "Auto-Learn" initialization function failed, throttle angle out of learning range.
Explanation: While performing the TPS "Auto-Learn" function, the measured throttle angle was not within acceptable limits.
Expected Engine Response: MIL illuminated. Engine will continue to run but not properly. Upon restart TPS Auto-Learn function will run agaiN unless voltage to ECU disconnected to clear memory.

Possible Causes:
1. TPS Related
   a. TPS rotated on throttle shaft assembly beyond allowable range.
   b. TPS bad.

2. Engine Wiring Harness Related
   a. Broken or shorted wire in harness.
      ECU pin 18 to TPS pin 1.
      ECU pin 4 to TPS pin 2.
      ECU pin 8 to TPS pin 3.

3. Throttle Body Related
   a. Throttle shaft inside TPS worn, broken, or damaged.
   b. Throttle plate loose or misaligned.
   c. Throttle plate bent or damaged allowing extra airflow past, or restricting movement.

4. ECU Related
   a. Circuit providing voltage or ground to TPS damaged.
   b. TPS signal input circuit damaged.

5. Oxygen Sensor/Harness Related
   a. Oxygen sensor bad.
   b. Wiring problem to oxygen sensor.
   c. Muffler leak (causing O_2 sensor to falsely indicate a lean condition).
   d. Bad ground between ECU and engine.

Code: **51** **"32 Pin" (MSE 1.1) Plastic-Cased ECU only.**
Source: Injector #1 circuit open, shorted to ground, or shorted to battery.
Explanation: Injector #1 is not functioning because the circuit is open, shorted to ground, or shorted to battery.
Expected Engine Response: Engine will run very poorly with only one cylinder functioning.

Possible Causes:
1. Injector Related
   a. Injector coil shorted or opened.

2. Engine Wiring Harness Related
   a. Broken or shorted wire in harness. ECU pin 14 to injector pin 2. ECU pin 28 to fuel pump relay pin 86. Note: after key-off then key-on code 56 would be set also. Fuel pump relay pin 87 to injector pin 1.
   b. Open main fuse F1.

3. Fuel Pump Relay Related
   a. Bad fuel pump relay. Primary side functional but pin 30 to pin 87 remains open. Primary side pin 85 to pin 86 is either open, or shorted during engine operation. Note: after key-off then key-on code 56 would be set also.

4. ECU Related
   a. Circuit controlling injector #1 damaged.
   b. Circuit controlling fuel pump relay damaged.

Code: **52** **"32 Pin" (MSE 1.1) Plastic-Cased ECU only.**
Source: Injector #2 circuit open, shorted to ground, or shorted to battery.
Explanation: Injector #2 is not functioning because the circuit is open, shorted to ground, or shorted to battery.
Expected Engine Response: Engine will run very poorly with only one cylinder functioning.

Possible Causes:
1. Injector Related
   a. Injector coil shorted or opened.

2. Engine Wiring Harness Related
   a. Broken or shorted wire in harness. ECU pin 15 to injector pin 2.ECU pin 28 to fuel pump relay pin 86. Note: after key-off then key-on code 56 would be set also. Fuel pump relay pin 87 to injector pin 1.
   b. Opened main fuse F1.

3. Fuel Pump Relay Related
   a. Bad fuel pump relay. Primary side functional, but pin 30 to pin 87 remains open. Primary side pin 85 to pin 86 is open or shorted during engine operation. Note: after key-off then key-on code 56 would be set also.

4. ECU Related
   a. Circuit controlling injector #2 damaged.
   b. Circuit controlling fuel pump relay damaged.

Code: **55** **"32 Pin" (MSE 1.1) Plastic-Cased ECU only.**
Source: MIL (Diagnostic lamp) circuit open, shorted to ground, or shorted to battery.
Explanation: MIL is not functioning because the circuit is open, shorted to ground, or shorted to battery.
Expected Engine Response: Engine will run normally if no other errors are present.

Possible Causes:
1. MIL (diagnostic lamp) Related
   a. MIL element opened or element shorted to ground.
   b. Lamp missing.

2. Engine Wiring Harness Related
   a. Broken or shorted wire in harness. ECU pin 29 to lamp open or shorted.

3. Vehicle Wiring Harness Related
   a. Broken or shorted wire in harness. Power lead to MIL open or shorted.

4. ECU Related
   a. Circuit controlling lamp damaged.

Code: **56** **"32 Pin" (MSE 1.1) Plastic-Cased ECU only.**

Source: Fuel pump relay circuit open, shorted to ground, or shorted to battery.

Explanation: Fuel pump, ignition coils, and fuel injectors will not function because the fuel pump relay circuit is either open, shorted to ground, or may be "on" continuously if shorted to battery.

Expected Engine Response: Engine will not run, or fuel pump will continue to run when switch is off.

Possible Causes:

1. Fuel Pump Relay Related
   a. Bad fuel pump relay.
      Primary side open or shorted.

2. Fuel Pump Related
   a. Fuel pump open or shorted internally.

3. Engine Wiring Harness Related
   a. Fuel pump fuse F1 open.
   b. Broken or shorted wire in harness.
      ECU pin 28 to fuel pump relay pin 86.
      Ignition switch to fuel pump relay pin 85.

4. ECU Related
   a. Circuit controlling fuel pump relay damaged.

Code: **61**

Source:

Explanation: Denotes the end of fault codes. If signaled first, no other fault codes are present.

Troubleshooting Flow Chart

The following flow chart (on page 5B.43) provides an alternative method of troubleshooting the EFI system. The chart will enable you to review the entire system in about 10-15 minutes. Using the chart, the accompanying diagnostic aids (listed after the chart), and any signaled fault codes, you should be able to quickly locate any problems within the system.

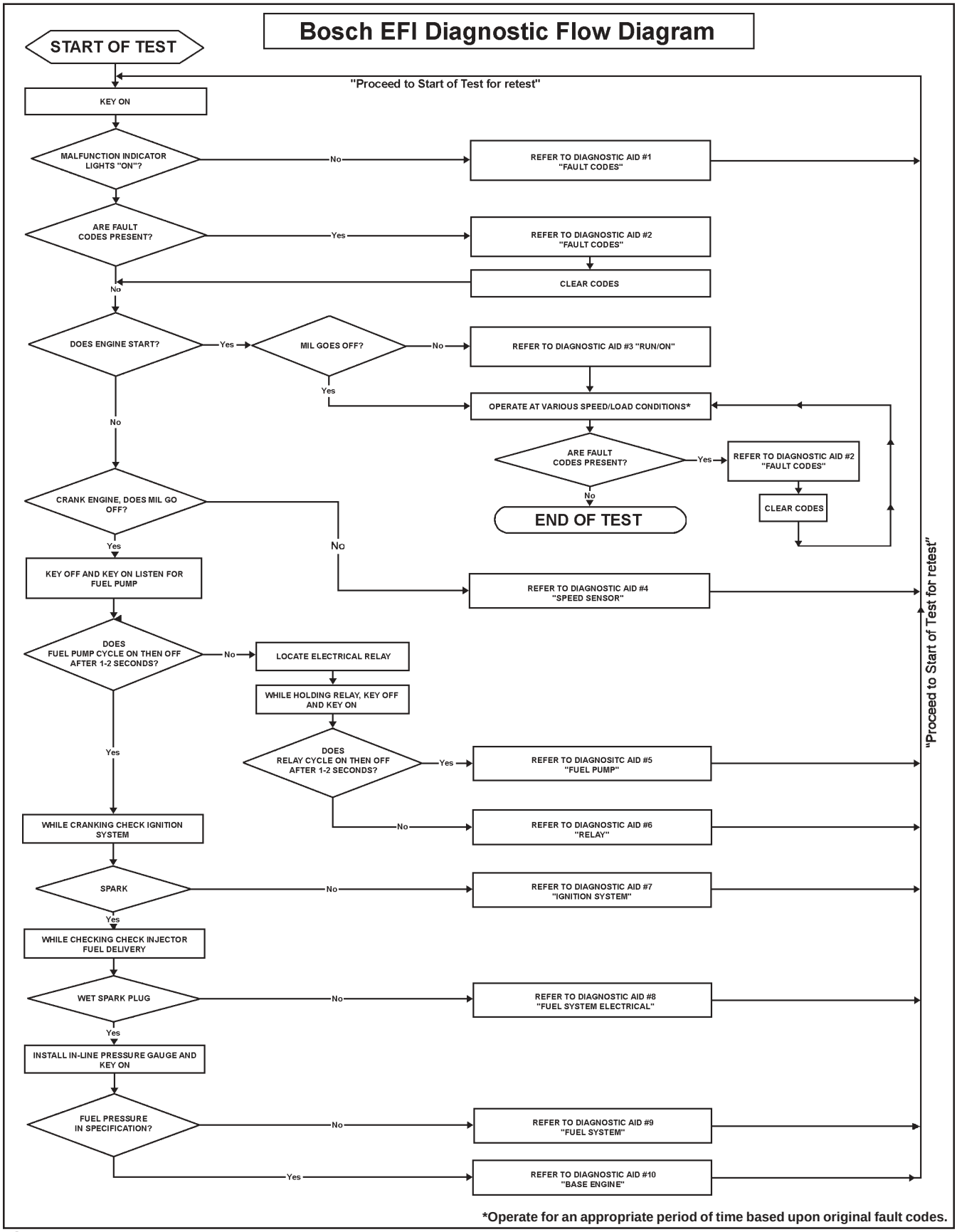
Bosch EFI Diagnostic Flow Diagram
START OF TEST
"Proceed to Start of Test for retest"
KEY ON
MALFUNCTION INDICATOR LIGHTS "ON"?
No
REFER TO DIAGNOSTIC AID #1 "FAULT CODES"
ARE FAULT CODES PRESENT?
Yes
REFER TO DIAGNOSTIC AID #2 "FAULT CODES"
CLEAR CODES
No
DOES ENGINE START?
Yes
MIL GOES OFF?
No
REFER TO DIAGNOSTIC AID #3 "RUN/ON"
Yes
OPERATE AT VARIOUS SPEED/LOAD CONDITIONS*
ARE FAULT CODES PRESENT?
Yes
REFER TO DIAGNOSTIC AID #2 "FAULT CODES"
CLEAR CODES
No
END OF TEST
No
CRANK ENGINE, DOES MIL GO OFF?
Yes
No
KEY OFF AND KEY ON LISTEN FOR FUEL PUMP
REFER TO DIAGNOSTIC AID #4 "SPEED SENSOR"
DOES FUEL PUMP CYCLE ON THEN OFF AFTER 1-2 SECONDS?
No
LOCATE ELECTRICAL RELAY
WHILE HOLDING RELAY, KEY OFF AND KEY ON
DOES RELAY CYCLE ON THEN OFF AFTER 1-2 SECONDS?
Yes
REFER TO DIAGNOSITC AID #5 "FUEL PUMP"
No
REFER TO DIAGNOSTIC AID #6 "RELAY"
Yes
WHILE CRANKING CHECK IGNITION SYSTEM
SPARK
No
REFER TO DIAGNOSTIC AID #7 "IGNITION SYSTEM"
Yes
WHILE CHECKING CHECK INJECTOR FUEL DELIVERY
WET SPARK PLUG
No
REFER TO DIAGNOSTIC AID #8 "FUEL SYSTEM ELECTRICAL"
Yes
INSTALL IN-LINE PRESSURE GAUGE AND KEY ON
FUEL PRESSURE IN SPECIFICATION?
No
REFER TO DIAGNOSTIC AID #9 "FUEL SYSTEM"
Yes
REFER TO DIAGNOSTIC AID #10 "BASE ENGINE"
"Proceed to Start of Test for retest"
*Operate for an appropriate period of time based upon original fault codes.

Figure 5B-44.

Flow Chart Diagnostic Aids

Diagnostic Aid #1 "SYSTEM POWER" (MIL does not illuminate when key is turned "**on**")

Possible causes:

1. Battery
2. Main system fuse
3. MIL light bulb burned out
4. MIL electrical circuit problem
   "35 Pin" (MA 1.7) Metal-Cased ECU: Pin circuits 31 and 31A.
   "24 Pin" (MSE 1.0) Plastic-Cased ECU: Pin circuits 19 and 84.
   "32 Pin" (MSE 1.1) Plastic-Cased ECU: Pin circuits 29 and 84.
5. Ignition switch
6. Permanent ECU power circuit problem
   "35 Pin" (MA 1.7) Metal-Cased ECU: Pin circuit 16.
   "24 Pin" (MSE 1.0) Plastic-Cased ECU: Pin circuit 1.
   "32 Pin" (MSE 1.1) Plastic-Cased ECU: Pin circuit 1.
7. Switched ECU power circuit problem
   "35 Pin" (MA 1.7) Metal-Cased ECU: Pin circuit 17.
   "24 Pin" (MSE 1.0) Plastic-Cased ECU: Pin circuit 2.
   "32 Pin" (MSE 1.1) Plastic-Cased ECU: Pin circuit 2.
8 ECU grounds
9. ECU

Diagnostic Aid #2 "FAULT CODES" (Refer to detailed fault code listing before flow chart and "servicing" information for the respective components)

1. Code 21 - Engine Speed Synchronization
2. Code 22 - Throttle Position Sensor (TPS)
3. Code 23 - Engine Control Unit (ECU)
4. Code 31 - Oxygen Sensor
5. Code 32 - Oxygen Sensor
6. Code 33 - Fuel System (temporary adaptation factor)
7. Code 34 - Fuel System (permanent adaptation factor)
8. Code 42 - Engine (Oil) Temperature Sensor
9. Code 43 - TPS "Auto-Learn" Initialization Function (Below Min. Limit), "**32 Pin" (MSE 1.1) Plastic-Cased ECU only**.
10. Code 44 - TPS "Auto-Learn" Initialization Function (Above Max. Limit), "**32 Pin" (MSE 1.1) Plastic-Cased ECU only**.
11. Code 51 - Injector 1, "**32 Pin" (MSE 1.1) Plastic-Cased ECU only**.
12. Code 52 - Injector 2, "**32 Pin" (MSE 1.1) Plastic-Cased ECU only**.
13. Code 55 - MIL Light, "**32 Pin" (MSE 1.1) Plastic-Cased ECU only**.
14. Code 56 - Pump Relay, "**32 Pin" (MSE 1.1) Plastic-Cased ECU only**.
15. Code 61 - End of Fault/Blink Code Transmission.

Diagnostic Aid #3 "RUN/ON" (MIL remains "on" while engine is running)*

Possible causes:

1. Fault codes which turn on MIL when engine is running.
   a. Code 21 - Engine Speed Synchronization
   b. Code 22 - Throttle Position Sensor (TPS)
   c. Code 23 - Engine Control Unit (ECU)
   d. Code 31 - Oxygen Sensor (shorted)
   e. Code 34 - Fuel System (permanent adaptation at limit)
   f. Code 42 - Engine (Oil) Temperature Sensor
   g. Code 43 - TPS "Auto-Learn" Initialization Function (Below Min. Limit), "**32 Pin" (MSE 1.1) Plastic-Cased ECU only**.
   h. Code 44 - TPS "Auto-Learn" Initialization Function (Above Max. Limit) "**32 Pin" (MSE 1.1) Plastic-Cased ECU only**.
   i. Code 51 - Injector 1, "**32 Pin" (MSE 1.1) Plastic-Cased ECU only**.
   j. Code 52 - Injector 2, "**32 Pin" (MSE 1.1) Plastic-Cased ECU only**.
   k. Code 55 - MIL Light, "**32 Pin" (MSE 1.1) Plastic-Cased ECU only**.
   l. Code 56 - Pump Relay, "**32 Pin" (MSE 1.1) Plastic-Cased ECU only**.
2. MIL circuit grounded between light and ECU.
   "35 Pin" (MA 1.7) Metal-Cased ECU: Pin circuit 31.
   "24 Pin" (MSE 1.0) Plastic-Cased ECU: Pin circuit 19.
   "32 Pin" (MSE 1.1) Plastic-Cased ECU: Pin circuit 29.
3. ECU

*NOTE: MIL in Metal-Cased ECU systems is an LED. The MIL in Plastic-Cased ECU systems must be a 1/4 watt incandescent lamp.

Diagnostic Aid #4 "SPEED SENSOR" (MIL does not turn off during cranking). Indicates the ECU is not receiving a signal from the speed sensor.

Possible causes:
1. Speed sensor
2. Speed sensor circuit problem
   "35 Pin" (MA 1.7) Metal-Cased ECU: Pin circuits 3 and 21.
   "24 Pin" (MSE 1.0) Plastic-Cased ECU: Pin circuits 9 and 10.
   "32 Pin" (MSE 1.1) Plastic-Cased ECU: Pin circuits 9 and 10.
3. Speed sensor/toothed wheel air gap
4. Toothed wheel
5. Flywheel key sheared
6. ECU

Diagnostic Aid #5 "FUEL PUMP" (fuel pump not turning on)

Possible causes:
1. Fuel pump fuse
2. Fuel pump circuit problem
   "35 Pin" (MA 1.7) Metal-Cased ECU: Circuits 43, 44, and relay.
   "24 Pin" (MSE 1.0) Plastic-Cased ECU: Circuits 30, 87, and relay.
   "32 Pin" (MSE 1.1) Plastic-Cased ECU: Circuits 30, 87, and relay.
3. Fuel pump

Diagnostic Aid #6 "RELAY" (relay not operating)

Possible causes:
1. Safety switches/circuit(s) problem
   "35 Pin" (MA 1.7) Metal-Cased ECU: Circuits 41 and 41A.
   "24 Pin" (MSE 1.0) Plastic-Cased ECU: Circuit 3.
   "32 Pin" (MSE 1.1) Plastic-Cased ECU: Circuit 25.
2. Relay circuit(s) problem
   "**35 Pin" (MA 1.7) Metal-Cased ECU:** Circuits 28, 41, and 41A.
   "24 Pin" (MSE 1.0) Plastic-Cased ECU: Circuits 18, 85, 30, and 87.
   "32 Pin" (MSE 1.1) Plastic-Cased ECU: Circuits 28,85, 30, and 87.
3. Relay
4. ECU grounds
5. ECU

Diagnostic Aid #7 "IGNITION SYSTEM" (no spark)

Possible causes:
1. Spark plug
2. Plug wire
3. Coil
4. Coil circuit(s)
   "35 Pin" (MA 1.7) Metal-Cased ECU: Circuits 1, 19, 40, 40A, 43, and relay.
   "24 Pin" (MSE 1.0) Plastic-Cased ECU: Circuits 22, 23, 65, 66, 30, and relay.
   "32 Pin" (MSE 1.1) Plastic-Cased ECU: Circuits 30, 31, 65, 66, relay and relay circuit 30.
5. ECU grounds
6. ECU

Diagnostic Aid #8 "FUEL SYSTEM-ELECTRICAL" (no fuel delivery)

Possible causes:
1. No fuel
2. Air in fuel rail
3. Fuel valve shut off
4. Fuel filter/line plugged
5. Injector circuit(s)
   "35 Pin" (MA 1.7) Metal-Cased ECU: Circuits 35, 35A, 45, and 45A.
   "24 Pin" (MSE 1.0) Plastic-Cased ECU: Circuits 16, 17, 45, and 45A.
   "32 Pin" (MSE 1.1) Plastic-Cased ECU: Circuits 14,15, and 45.
6. Injector
7. ECU grounds
8. ECU

Diagnostic Aid #9 "FUEL SYSTEM" (fuel pressure)

Possible causes for low fuel system pressure:
1. Low fuel
2. Fuel filter plugged
3. Fuel supply line plugged
4. Pressure regulator
5. Fuel pump

Possible causes for high fuel system pressure:
1. Pressure regulator
2. Fuel return line plugged or restricted.

Diagnostic Aid #10 "BASIC ENGINE" (cranks but will not run)

Possible causes:
1. Refer to basic engine troubleshooting charts within service manual sections 3, 5, and 8.

Section 6
Lubrication System

General

This engine uses a full pressure lubrication system. This system delivers oil under pressure to the crankshaft, camshaft, and connecting rod bearing surfaces. In addition to lubricating the bearing surfaces, the lubrication system supplies oil to the hydraulic valve lifters.

A high-efficiency gerotor pump is located in the closure plate. The oil pump maintains high oil flow and oil pressure, even at low speeds and high operating temperatures. A pressure relief valve limits the maximum pressure of the system.

Service

The closure plate must be removed to service the oil pickup, the pressure relief valve and the oil pump. Refer to the appropriate procedures in Sections 9 and 10.

Oil Recommendations

Using the proper type and weight of oil in the crankcase is extremely important; so is checking oil daily and changing the oil and filter regularly.

Use high-quality detergent oil of **API (American Petroleum Institute) service class SG, SH, SJ or higher.** Select the viscosity based on the air temperature at the time of operation as shown in the following table.

RECOMMENDED SAE VISCOSITY GRADES

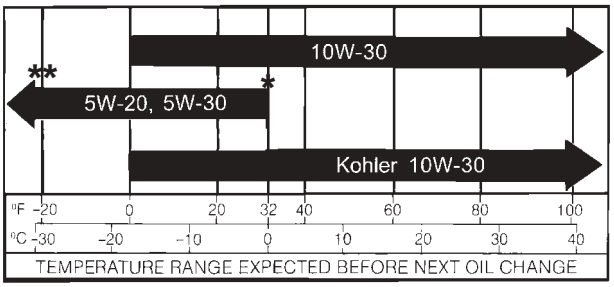

*Use of synthetic oil having 5W-20 or 5W-30 rating is acceptable, up to 4°C (40°F).
**Synthetic oils will provide better starting in extreme cold below -23°C (-10°F).

NOTE: Using other than service class SG, SH, SJ or higher oil, or extending oil change intervals longer than recommended can cause engine damage.

NOTE: Synthetic oils meeting the listed classifications may be used with oil changes performed at the recommended intervals. However, to allow piston rings to properly seat, a new or rebuilt engine should be operated for at least 50 hours using standard petroleum based oil before switching to synthetic oil.

A logo or symbol on oil containers identifies the API service class and SAE viscosity grade. See Figure 6-1.

Figure 6-1. Oil Container Logo.

The top position of the symbol shows service class such as **API SERVICE CLASS SJ**. The symbol may show additional categories such as **SH, SG/CC, or CD**. The center portion shows the viscosity grade such as SAE 10W-30. If the bottom portion shows "Energy Conserving," it means that oil is intended to improve fuel economy in passenger car engines.

Checking Oil Level

The importance of checking and maintaining the proper oil level in the crankcase cannot be overemphasized. Check oil **BEFORE EACH USE** as follows:

1. Make sure the engine is stopped, level and is cool so the oil has had time to drain into the sump.

2. Clean the area around the dipstick before removing it. This will help to keep dirt, grass clippings, etc., out of the engine.

3. Remove the dipstick; wipe oil off. Reinsert the dipstick into the tube until fully seated. See Figure 6-2.

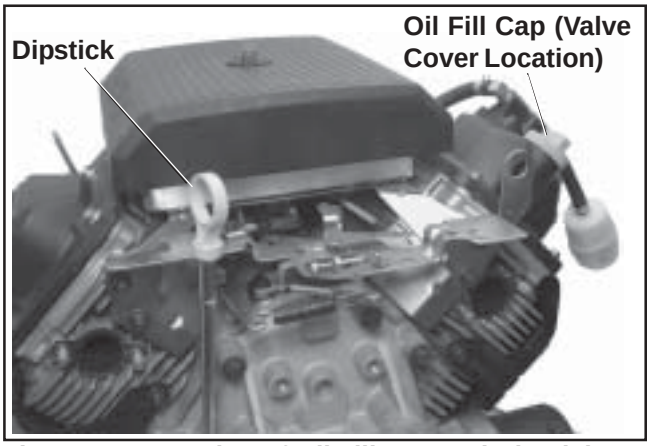

Figure 6-2. Location of Oil Fill Cap and Dipstick.

4. Remove dipstick and check oil level. The level should be between the ''F'' and ''L'' marks. If low, add oil of the proper type up to the "F" mark. Reinstall oil fill cap and dipstick.

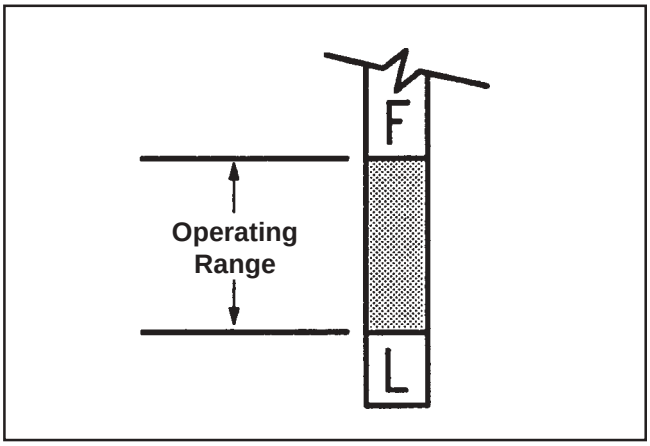

Figure 6-3. Oil Level Marks on Dipstick.

NOTE: To prevent extensive engine wear or damage, always maintain the proper oil level in the crankcase. Never operate the engine with the oil level below the ''L'' mark or above the ''F'' mark on the dipstick.

Changing Oil and Oil Filter

Changing Oil

Change the oil after every **100 hours** of operation (more frequently under severe conditions). Refill with service class SG, SH, SJ or higher oil as specified in the "Viscosity Grades" table on page 6.1.

Change the oil while the engine is still warm. The oil will flow more freely and carry away more impurities. Make sure the engine is level when filling or checking oil.

Change the oil as follows:

1. Clean the areas around one of the oil drain plugs, oil fill cap, and dipstick.

2. Remove one of the oil drain plugs. A drain plug is located on either side of the crankcase; one is adjacent to and below the oil filter, the other is below the starter. See Figure 6-4.

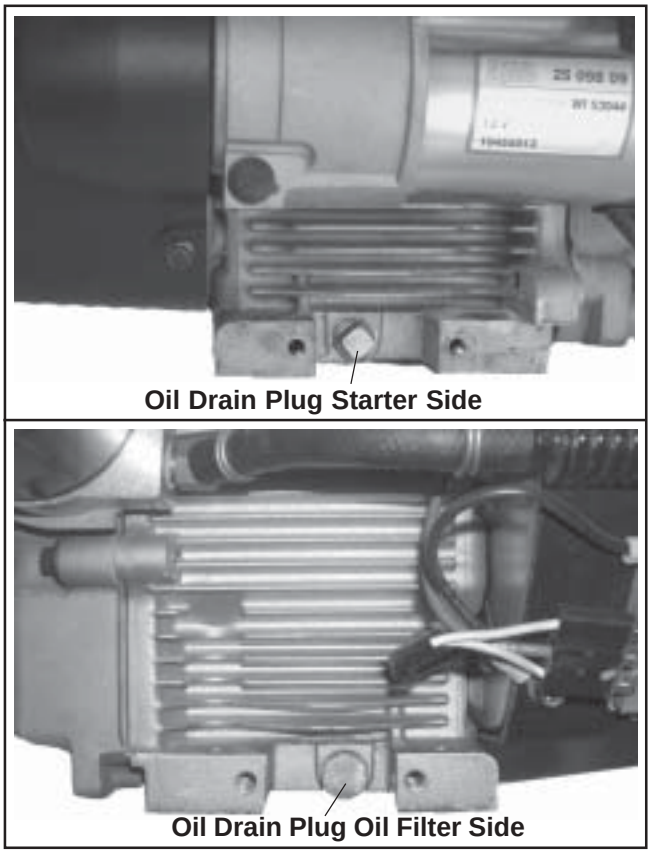

Figure 6-4. Location of Oil Drains.

3. Allow all the oil to drain and then reinstall the drain plug. Torque to **13.6 N·m (10 ft. lb.)**.

4. Remove the oil fill cap and fill the engine with the proper oil to the ''F'' mark on the dipstick. Always check the oil level with the dipstick before adding more oil.

Figure 6-5. Removing Oil Fill Cap.

5. Reinstall the oil fill cap.

Changing Oil Filter

Replace the oil filter **at least every other oil change (every 200 hours of operation)**. Always use a genuine Kohler oil filter. Change the filter as follows. See Figure 6-6.

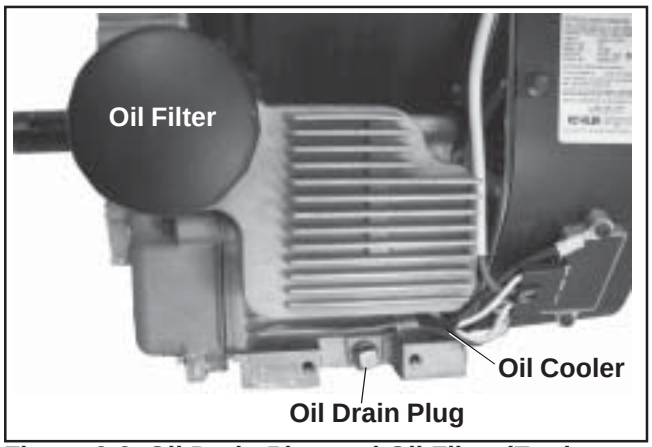

Figure 6-6. Oil Drain Plug and Oil Filter (Engine With Oil Cooler).

1. Clean the areas around the drain plug, oil filter, oil fill cap and dipstick.

2. Remove one of the oil drain plugs. A drain plug is located on either side of the crankcase; one is adjacent to and below the oil filter, the other is below the starter.

3. Allow all oil to drain and then reinstall the drain plug. Torque to **13.6 N·m (10 ft. lb.)**.

4. Remove the old filter and wipe off the filter adapter with a clean cloth.

5. Place a new replacement filter in a shallow pan with the open end up. Pour new oil, of the proper type, in through the threaded center hole. Stop pouring when the oil reaches the bottom of the threads. Allow a minute or two for the oil to be absorbed by the filter material.

6. Apply a thin film of clean oil to the rubber gasket on the new filter.

7. Install the new oil filter to the filter adapter. Hand tighten the filter clockwise until the rubber gasket contacts the adapter, then tighten the filter an additional **3/4-1 turn**.

8. Remove the oil fill cap and fill the engine with the proper oil to the ''F'' mark on the dipstick. Always check the oil level with the dipstick before adding more oil.

9. Reinstall the oil fill cap and dipstick.

10. Start the engine and check for oil leaks. Stop the engine, correct any leaks, and allow a minute for the oil to drain down, then recheck the level on the dipstick.

Service Oil Cooler

Some engines are equipped with an oil cooler. One style of oil cooler mounts on the engine crankcase and has the oil filter on it. The other style of oil cooler is mounted on the blower housing, separate from the oil filter. See Figure 6-7.

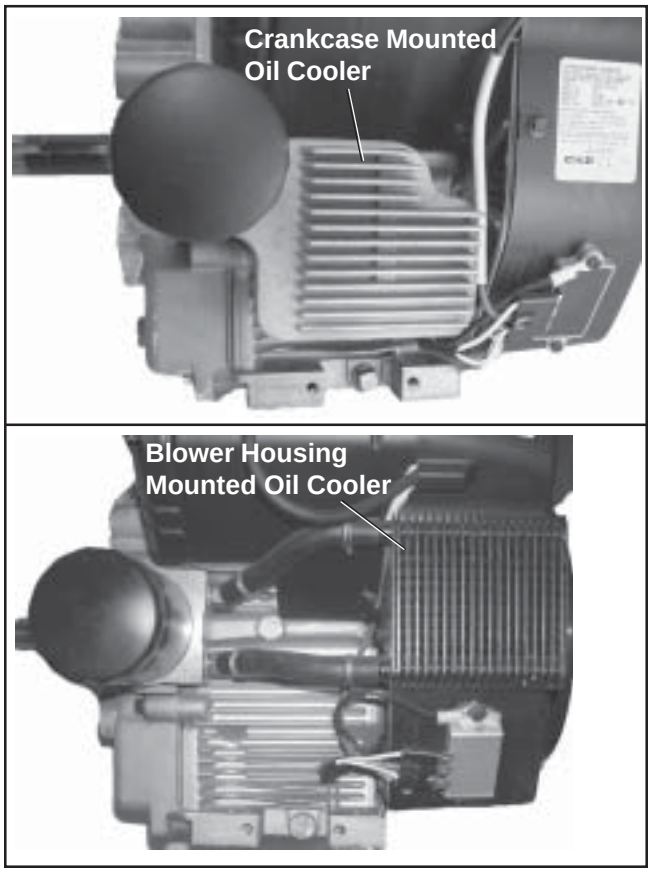

Figure 6-7. Oil Coolers.

Inspect and clean the oil cooler **every 100 hours of operation** (more frequently under severe conditions). In order to be effective, the oil cooler must be kept free of debris.

To service the crankcase mounted oil cooler, clean off the outside fins with a brush or with compressed air.

To service the blower housing mounted oil cooler, clean the outside of fins with a brush. Remove the two screws holding the cooler unit to the blower housing. Tilt the cooler downward. Clean the inside of the cooler with a brush or with compressed air. After cleaning, reinstall the oil cooler to the blower housing with the two mounting screws.

Oil Sentry™

General

Some engines are equipped with an optional Oil Sentry™ oil pressure monitor switch. See Figure 6-8. If the pressure drops below an acceptable level, the Oil Sentry™ will either shut off the engine or activate a warning signal, depending on the application.

The pressure switch is designed to break contact as the oil pressure increases above 3-5 psi, and make contact as the oil pressure decreases below 3-5 psi.

On stationary or unattended applications (pumps, generators, etc.), the pressure switch can be used to ground the ignition module to stop the engine. On vehicular applications (lawn tractors, mowers, etc.) the pressure switch can only be used to activate a "low oil" warning light or signal.

NOTE: Make sure the oil level is checked **before each use** and is maintained up to the "F" mark on the dipstick. This includes engines equipped with Oil Sentry™.

Installation

The Oil Sentry™ pressure switch is installed in the breather cover. See Figure 6-8.

Figure 6-8. Location of Oil Sentry™ Switch (or pipe plug).

On engines not equipped with Oil Sentry™ the installation hole is sealed with a 1/8-27 N.P.T.F. pipe plug.

To install the switch, follow these steps:

1. Apply **pipe sealant with Teflon®** (Loctite® No. 59241 or equivalent) to the threads of the switch.

2. Install the switch into the tapped hole in the breather cover. See Figure 6-8.

3. Torque the switch to **4.5 N·m (40 in. lb.)**.

Testing

Compressed air, a pressure regulator, pressure gauge, and a continuity tester are required to test the switch.

1. Connect the continuity tester across the blade terminal and the metal case of the switch. With **0 psi** pressure applied to the switch, the tester should indicate **continuity (switch closed)**.

2. Gradually increase the pressure to the switch. As the pressure increases through the range of **3.0/5.0 psi** the tester should indicate a change to **no continuity (switch open)**. The switch should remain open as the pressure is increased to **90 psi maximum**.

3. Gradually decrease the pressure through the range of **3.0/5.0 psi** The tester should indicate a change to **continuity (switch closed) down to 0 psi**.

4. Replace the switch if it does not operate as specified.

Section 7
Retractable Starter

WARNING: Spring Under Tension!

Retractable starters contain a powerful, recoil spring that is under tension. Always wear safety goggles when servicing retractable starters and carefully follow instructions in this section for relieving spring tension.

To Remove Starter

1. Remove the five hex flange screws securing the starter to the blower housing.

2. Remove the starter.

To Install Starter

1. Install the retractable starter onto the blower housing, leaving the five hex flange screws slightly loose.

2. Pull the starter handle out until the pawls engage in the drive cup. Hold the handle in this position and tighten the screws securely.

Rope Replacement

The rope can be replaced without complete starter disassembly.

1. Remove the starter from the blower housing.

2. Pull the rope out approximately 12 in. and tie a temporary (slip) knot in it to keep it from retracting into the starter. See Figure 7-2.

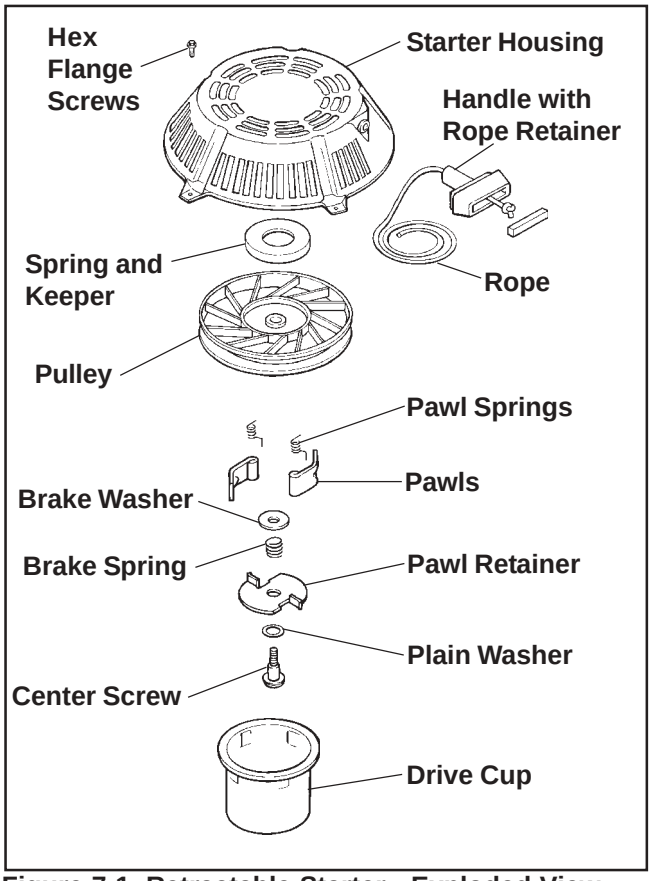

Figure 7-1. Retractable Starter - Exploded View.

7

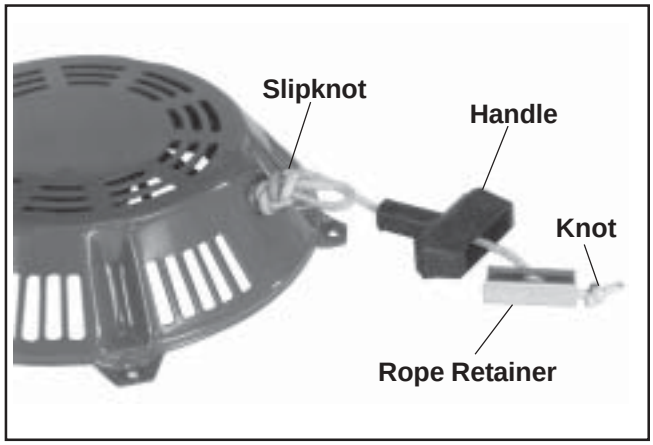

Figure 7-2. Removing Starter Handle.

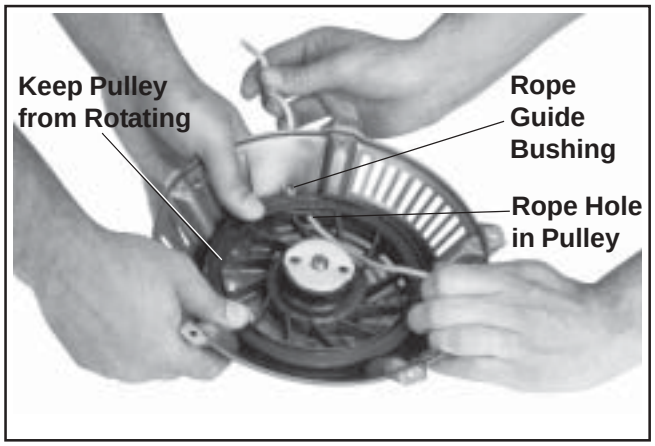

Figure 7-3. Installing Rope.

3. Remove the rope retainer from inside the starter handle. Untie the single knot and remove the rope retainer and handle.

4. Hold the pulley firmly and untie the slipknot. Allow the pulley to rotate slowly as the spring tension is released.

5. When all spring tension on the starter pulley is released, remove the rope from the pulley.

6. Tie a single knot in one end of the new rope.

7. Rotate the pulley counterclockwise (when viewed from pawl side of pulley) until the spring is tight (approximately 6 full turns of pulley).

8. Rotate the pulley clockwise until the rope hole in the pulley is aligned with the rope guide bushing of the starter housing.

   NOTE: Do not allow the pulley/spring to unwind. Enlist the aid of a helper if necessary, or use a C-clamp to hold the pulley in position.

9. Insert the new rope through the rope hole in the starter pulley and the rope guide bushing of the housing. See Figure 7-3.

10. Tie a slipknot approximately 12 in. from the free end of rope. Hold the pulley firmly and allow it to rotate slowly until the slipknot reaches the guide bushing of the housing.

11. Slip the handle and rope retainer onto the rope. Tie a single knot at the end of the rope. Install the rope retainer into the starter handle.

12. Untie the slipknot and pull on the handle until the rope is fully extended. Slowly retract the rope into the starter. When the spring is properly tensioned, the rope will retract fully and the handle will stop against the starter housing.

Pawls (Dogs) Replacement

To replace the pawls, follow disassembly steps 1-4 and reassembly steps 3-8 on the following pages. A pawl repair kit is available which includes the following components:

Qty.	Description
1	Pawl Retainer
1	Center Screw
2	Pawl (Dog) Spring
1	Brake Spring
2	Starter Pawl (Dog)
1	Brake Washer
1	Washer

Disassembly

WARNING: Spring Under Tension!

Do not remove the center screw from the starter until the spring tension is released. Removing the center screw before releasing spring tension, or improper starter disassembly, can cause the sudden and potentially dangerous release of the spring. Follow these instructions carefully to ensure personal safety and proper starter disassembly. Make sure adequate face protection is worn by all persons in the area.

1. Release the spring tension and remove the handle and the starter rope. (Refer to "Rope Replacement," steps 2 through 5 on pages 7.1 and 7.2.)

2. Remove the center screw, washer, and pawl retainer. See Figure 7-4.

3. Remove the brake spring and the brake washer. See Figure 7-5.

4. Carefully note the positions of the pawls and pawl springs before removing them.

   Remove the pawls and pawl springs from the starter pulley.

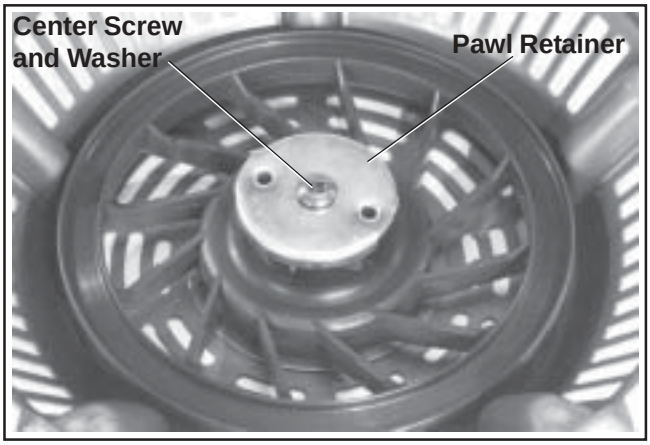

Figure 7-4. Center Screw, Washer and Pawl Retainer.

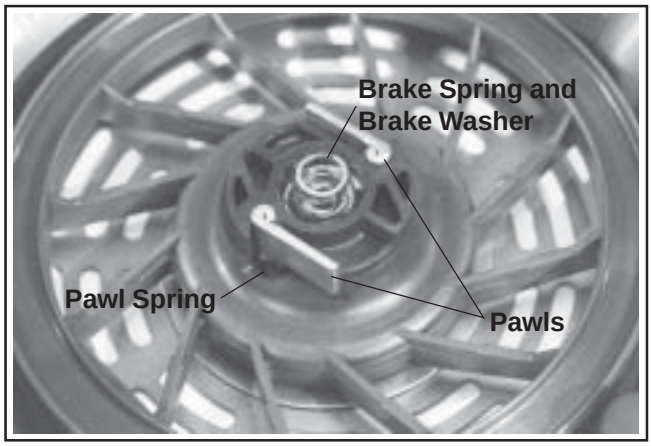

Figure 7-5. Brake Spring and Washer, Pawls, and Pawl Springs.

5. Rotate the pulley **clockwise 2 full turns**. This will ensure the spring is disengaged from the starter housing.

6. Hold the pulley in the starter housing. Invert the pulley/housing so the pulley is away from your face, and away from others in the area.

7. Rotate the pulley slightly from side to side and carefully separate the pulley from the housing. See Figure 7-6.

   If the pulley and the housing do not separate easily, the spring could be engaged in the starter housing, or there is still tension on the spring. Return the pulley to the housing and repeat step 5 before separating the pulley and housing.

Figure 7-6. Removing Pulley from Housing.

8. Note the position of the spring and keeper assembly in the pulley. See Figure 7-7.

   Remove the spring and keeper assembly from the pulley as a package.

WARNING: Spring Under Tension!
Do not remove the spring from the keeper. Severe personal injury could result from the sudden uncoiling of the spring.

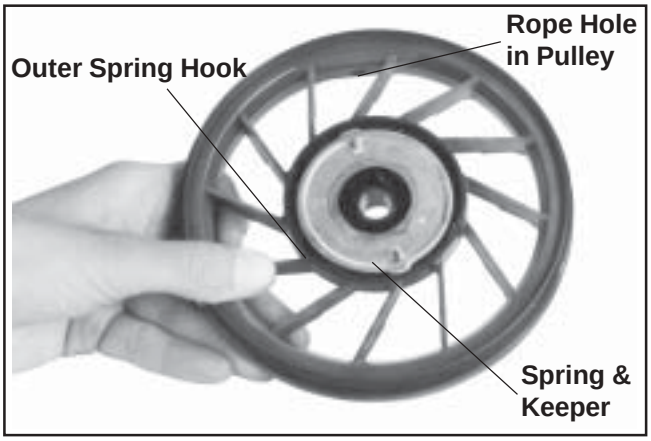

Figure 7-7. Position of Spring and Keeper in Pulley.

Inspection and Service

1. Carefully inspect the rope, pawls, housing, center screw, and other components for wear or damage.

2. Replace all worn or damaged components. Use only genuine Kohler replacement parts as specified in the Parts Manual. All components shown in Figure 7-1 are available as service parts. Do not use nonstandard parts.

3. Do not attempt to rewind a spring that has come out of the keeper. Order and install a new spring and keeper assembly.

4. Clean all old grease and dirt from the starter components. Generously lubricate the spring and center shaft with any commercially available bearing grease.

Reassembly

1. Make sure the spring is well lubricated with grease. Place the spring and keeper assembly inside the pulley (with spring towards pulley). See Figure 7-7.

2. Install the pulley assembly into the starter housing. See Figure 7-8. Make sure the pulley is fully seated against the starter housing. Do not wind the pulley and recoil spring at this time.

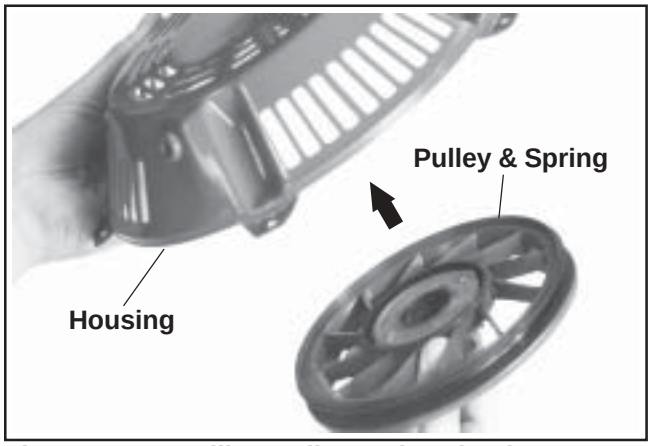

Figure 7-8. Installing Pulley and Spring into Housing.

3. Install the pawl springs and pawls into the starter pulley. See Figure 7-9.

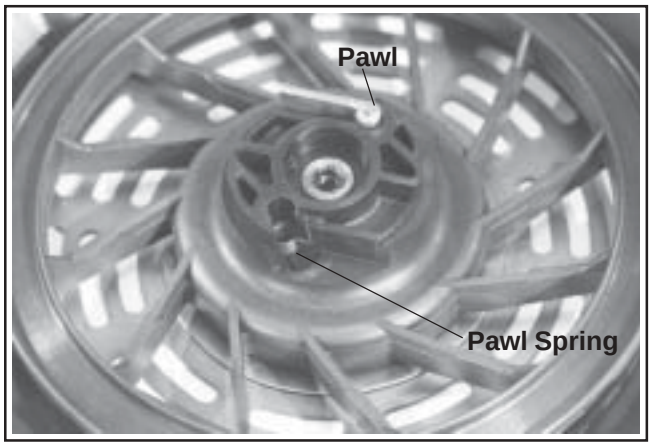

Figure 7-9. Installing Pawls and Pawl Springs.

4. Place the brake washer in the recess in starter pulley; over the center shaft.

5. Lubricate the brake spring sparingly with grease. Place the spring on the plain washer. Make sure the threads in the center shaft remain clean, dry, and free of grease and oil.

6. Apply a small amount of **Loctite® No. 271** to the threads of the center screw. Install the center screw with the washer and retainer to the center shaft. Torque the screw to **7.4-8.5 N·m (65-75 in. lb.)**.

7. Tension the spring and install the rope and handle as instructed in steps 6 through 12 under "Rope Replacement" on page 7.2.

8. Install the starter to the engine blower housing as instructed in "To Install Starter" on page 7.1.

Section 8
Electrical System and Components

This section covers the operation, service, and repair of the electrical system components. Systems and components covered in this section are:

- Spark Plugs
- Battery and Charging System
- Electronic CD Ignition System (including SMART-SPARK™ on applicable models)
- Electric Starter

Spark Plugs

Engine misfire or starting problems are often caused by a spark plug that has improper gap or is in poor condition.

The engine is equipped with the following spark plugs:

Type: The standard spark plug is a Champion® RC12YC (Kohler Part No. 12 132 02-S). RFI compliant engines use a Champion® XC12YC (Kohler 25 132 14-S) spark plug. A high-performance spark plug, Champion® Platinum 3071 (used on Pro Series engines, Kohler Part No. 25 132 12-S) is also available. Equivalent alternate brand plugs can also be used.

Gap: 0.76 mm (0.030 in.)
Thread Size: 14 mm
Reach: 19.1 mm (3/4 in.)
Hex Size: 15.9 mm (5/8 in.)

Spark Plug Service

Every **200 hours** of operation, remove each spark plug. Check its condition and either reset the gap or replace with a new plug as necessary. To service the plugs, perform the following steps:

1. Before removing each spark plug, clean the area around the base of the plug to keep dirt and debris out of the engine.

2. Remove the plug and check its condition. See "Inspection" following this procedure. Replace the plug if necessary.

   NOTE: Do not clean spark plug in a machine using abrasive grit. Some grit could remain in the spark plug and enter the engine causing extensive wear and damage.

3. Check the gap using a wire feeler gauge. Adjust the gap to **0.76 mm (0.030 in.)** by carefully bending the ground electrode. See Figure 8-1.

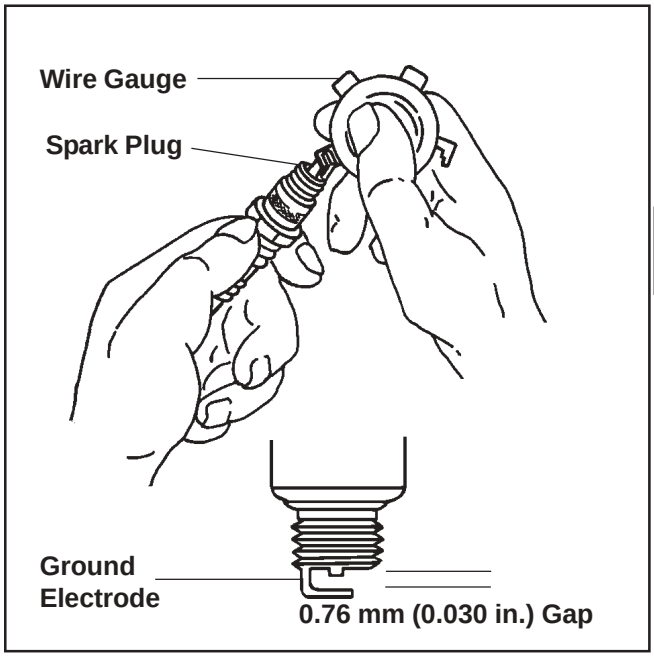

Figure 8-1. Servicing Spark Plug.

4. Reinstall the spark plug into the cylinder head and torque to **24.4-29.8 N·m (18-22 ft. lb.)**.

Inspection

Inspect each spark plug as it is removed from the cylinder head. The deposits on the tip are an indication of the general condition of the piston rings, valves, and carburetor.

Normal and fouled plugs are shown in the following photos:

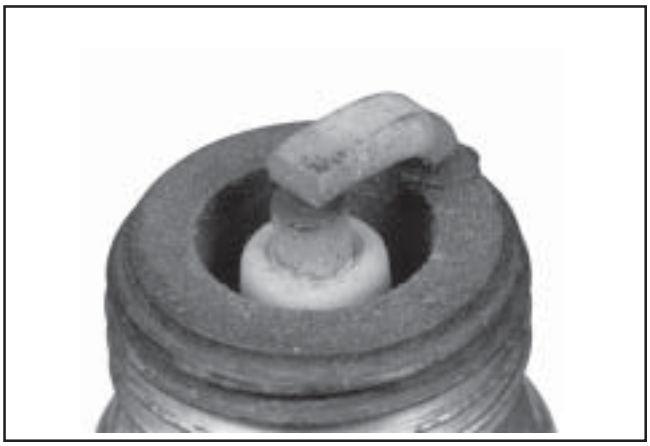

Normal: A plug taken from an engine operating under normal conditions will have light tan or gray colored deposits. If the center electrode is not worn, a plug in this condition could be set to the proper gap and reused.

Carbon Fouled: Soft, sooty, black deposits indicate incomplete combustion caused by a restricted air cleaner, over rich carburetion, weak ignition, or poor compression.

Worn: On a worn plug, the center electrode will be rounded and the gap will be greater than the specified gap. Replace a worn spark plug immediately.

Wet Fouled: A wet plug is caused by excess fuel or oil in the combustion chamber. Excess fuel could be caused by a restricted air cleaner, a carburetor problem, or operating the engine with too much choke. Oil in the combustion chamber is usually caused by a restricted air cleaner, a breather problem, worn piston rings or valve guides.

Overheated: Chalky, white deposits indicate very high combustion temperatures. This condition is usually accompanied by excessive gap erosion. Lean carburetor settings, an intake air leak, or incorrect spark timing are normal causes for high combustion temperatures.

Battery

General

A 12-volt battery with 400 cold cranking amps is generally recommended for starting in all conditions. A smaller capacity battery is often sufficient if an application is started only in warmer temperatures. Refer to the following table for minimum capacities (cca) based on anticipated ambient temperatures. The actual cold cranking requirement depends on engine size, application, and starting temperatures. The cranking requirements increase as temperatures decrease and battery capacity shrinks. Refer also to the operating instructions of the equipment being this engine powers for specific battery requirements.

Battery Size Recommendations

Temperature	Battery Required
Above 32°F (0°C)	200 cca minimum
0°F to 32°F (-18°C to 0°C)	250 cca minimum
-5°F to 0°F (-21°C to -18°C)	300 cca minimum
-10°F (-23°C) or below	400 cca minimum

If the battery charge is insufficient to turn over the engine, recharge the battery.

Battery Maintenance

Regular maintenance is necessary to prolong battery life.

WARNING: Explosive Gas!

Batteries produce explosive hydrogen gas while being charged. To prevent a fire or explosion, charge batteries only in well ventilated areas. Keep sources of ignition away from the battery at all times. Keep batteries out of the reach of children. Remove all jewelry when servicing batteries.

Before disconnecting the negative (-) ground cable, make sure all switches are OFF. If ON, a spark will occur at the ground cable terminal which could cause an explosion if hydrogen gas or gasoline vapors are present.

1. Regularly check the level of electrolyte. Add distilled water as necessary to maintain the recommended level.

   NOTE: Do not overfill the battery. Poor performance or early failure due to loss of electrolyte will result.

2. Keep the cables, terminals, and external surfaces of the battery clean. A build-up of corrosive acid or grime on the external surfaces can cause the battery to self-discharge. Self-discharge occurs rapidly when moisture is present.

3. Wash the cables, terminals, and external surfaces with a mild baking soda and water solution. Rinse thoroughly with clear water.

   NOTE: Do not allow the baking soda solution to enter the cells as this will destroy the electrolyte.

Battery Test

To test the battery, you will need a DC voltmeter. Perform the following steps (See Figure 8-2):

1. Connect the voltmeter across the battery terminals.

2. Crank the engine. If the battery drops below 9 volts while cranking, the battery is too small, discharged, or faulty.

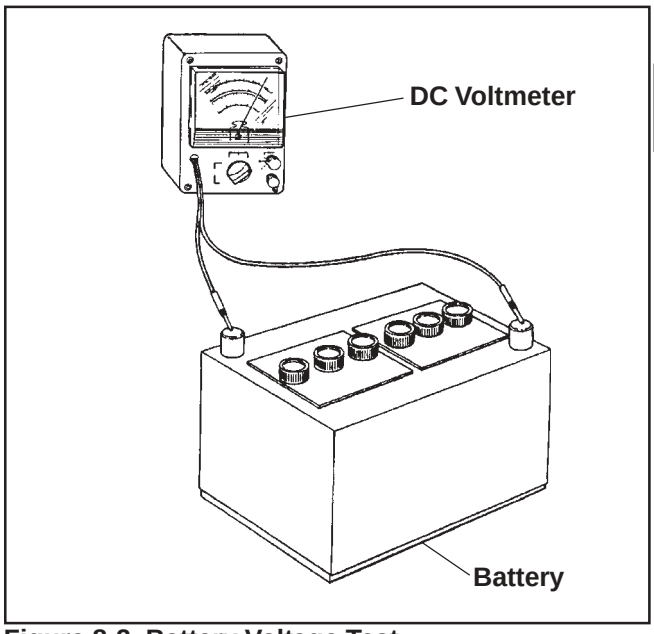

Figure 8-2. Battery Voltage Test.

Electronic CD Ignition Systems

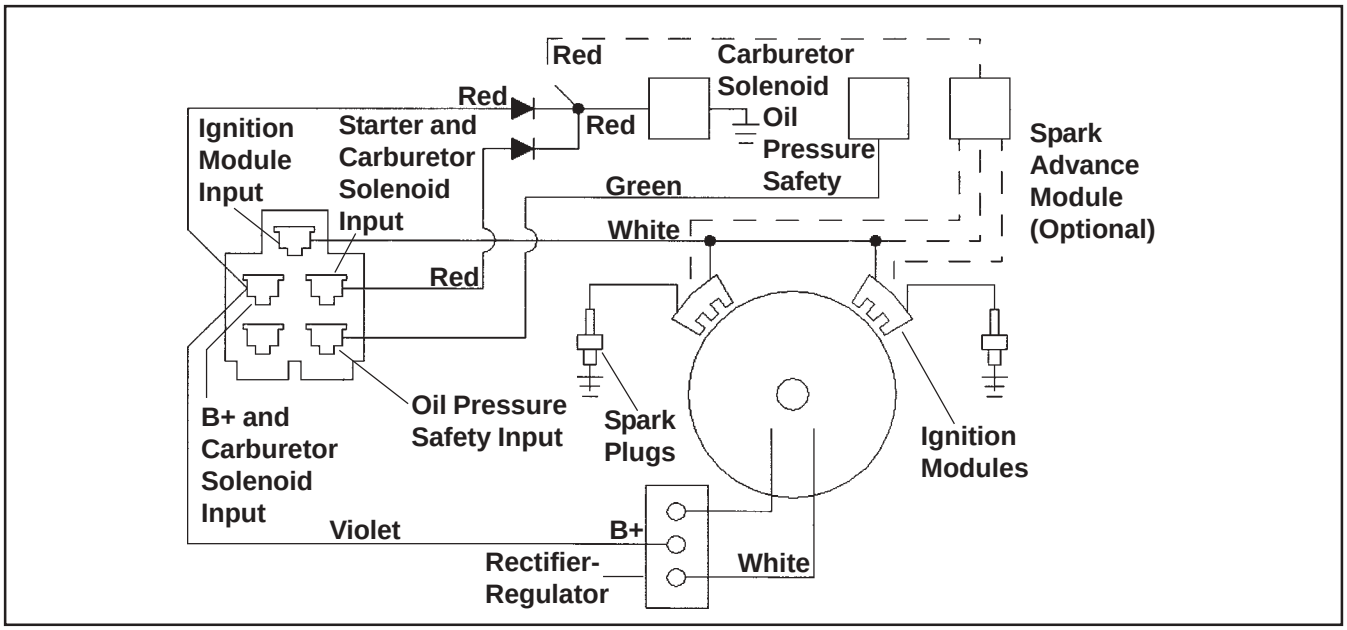

Figure 8-3. Electronic CD Ignition System (For Customer Connected Tractor Applications).

The SMART-SPARK™ ignition system used on some models is an advanced version of the CD ignition system used on other CH engines. Its operation can be best understood by first understanding the standard system and how it works. Since both systems will continue in use, it is advantageous to understand them both. The operation of the standard system is explained first then expanded to cover SMART-SPARK™.

Operation of CD Ignition Systems

A. Capacitive Discharge with Fixed Timing

This system (Figure 8-3) consists of the following components:

- A magnet assembly which is permanently affixed to the flywheel.
- Two electronic capacitive-discharge ignition modules which mount on the engine crankcase (Figure 8-4).
- A kill switch (or key switch) which grounds the modules to stop the engine.
- Two spark plugs.

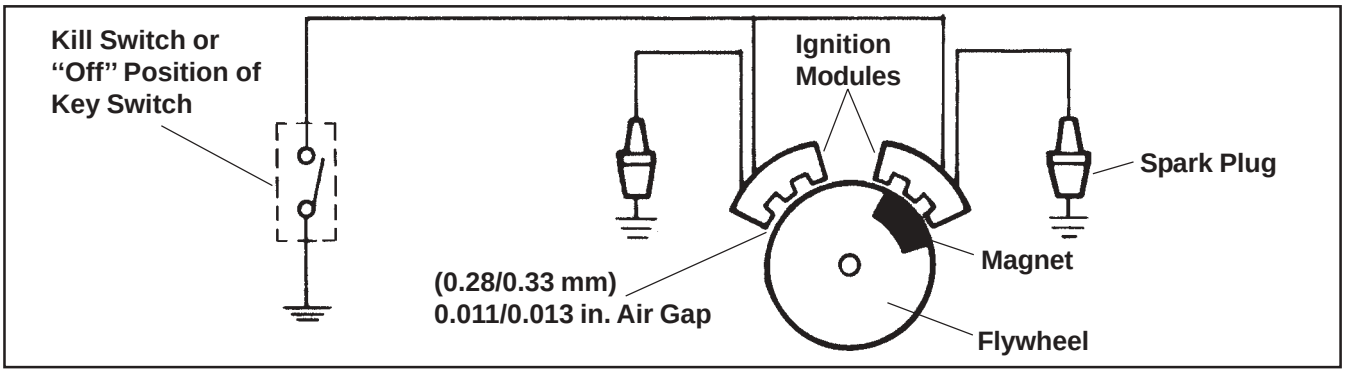

Figure 8-4. Capacitive Discharge (Fixed Timing) Ignition System.

The timing of the spark is controlled by the location of the flywheel magnet group as referenced to engine top dead center.

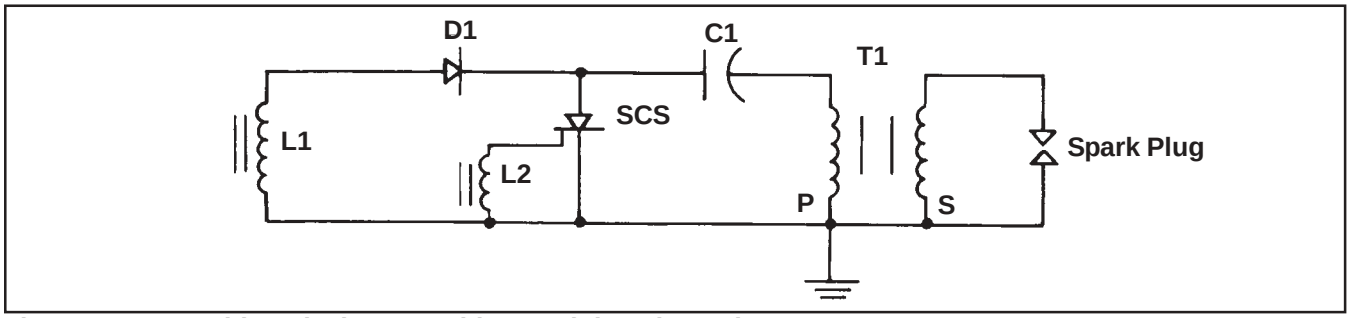

Figure 8-5. Capacitive Discharge Ignition Module Schematic.

Operation: As the flywheel rotates, the magnet grouping passes the input coil (L1). The corresponding magnetic field induces energy into the input coil (L1). The resultant pulse is rectified by D1 and charges capacitor C1. As the magnet assembly completes its pass, it activates the triggering device (L2), which causes the semiconductor switch (SCS) to turn on. With the device switch "ON," the charging capacitor (C1) is directly connected across the primary (P) of the output transformer (T1). As the capacitor discharges, the current initiates a fast rising flux field in the transformer core. A high voltage pulse is generated from this action into the secondary winding of the transformer. This pulse is delivered to the spark plug gap. Ionization of the gap occurs, resulting in an arc at the plug electrodes. This spark ignites the fuel-air mixture in the combustion chamber.

B. Capacitive Discharge with Electronic Spark Advance (SMART-SPARK™).

SMART-SPARK™ equipped engines utilize an electronic capacitive discharge ignition system with electronic spark advance. A typical application (Figure 8-6) consists of the following components:

- A magnet assembly which is permanently affixed to the flywheel.
- Two electronic capacitive discharge ignition modules which mount on the engine crankcase (Figure 8-6).
- A spark advance module which mounts to the engine shrouding (Figure 8-7).
- A 12 volt battery which supplies current to the spark advance module.
- A kill switch (or key switch) which grounds the spark advance module to stop the engine.
- Two spark plugs.

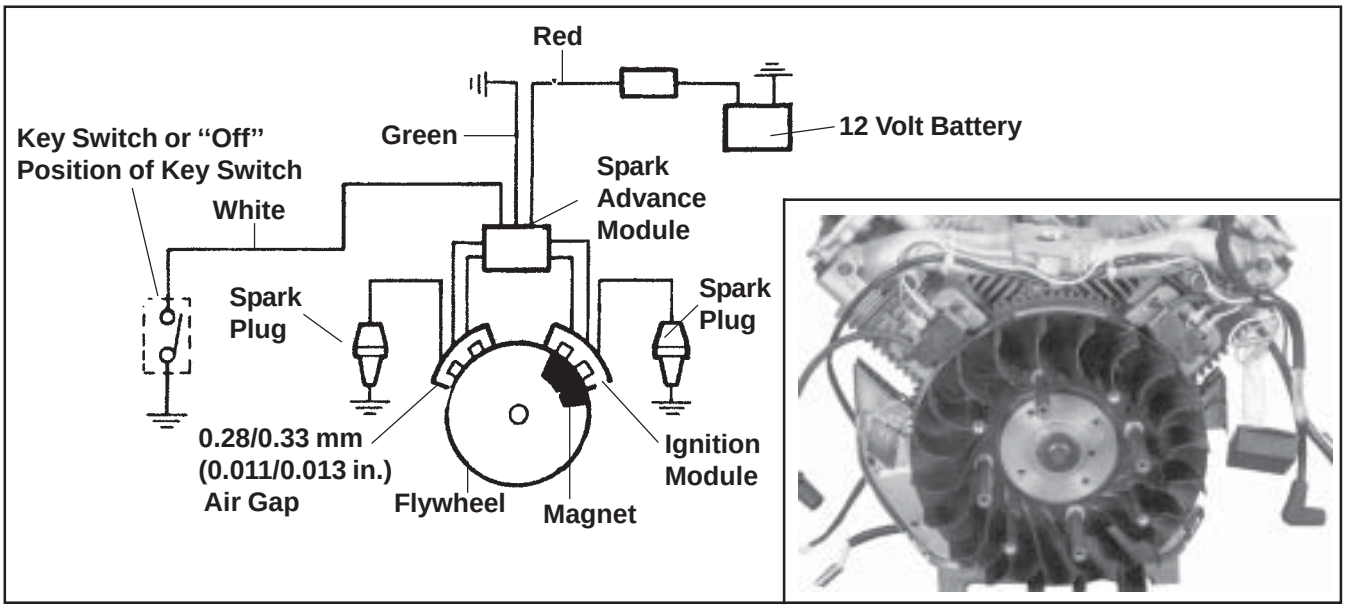

Figure 8-6. Capacitive Discharge Ignition System with Spark Advance.

The timing of the spark is controlled by the location of the flywheel magnet group as referenced to the engine top dead center and the delay created by the spark advance module.

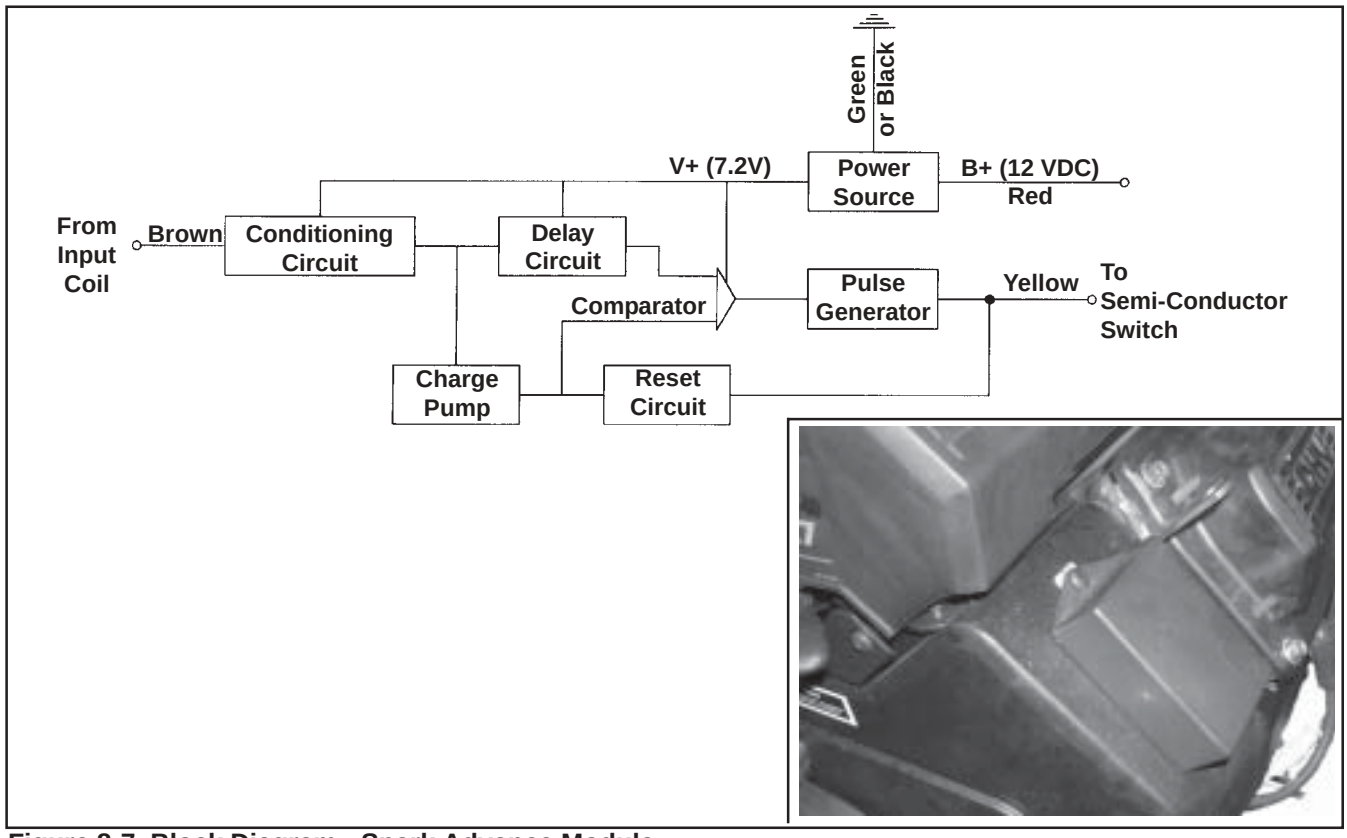

Figure 8-7. Block Diagram - Spark Advance Module.

Operation: The ignition module for this system operates in the same fashion as the fixed timing module, except the trigger circuit for the semiconductor (L2, Figure 8-5) is replaced by the spark advance module (Figure 8-7).

The pulse generated by the input coil of the ignition module (L1, Figure 8-5) is fed to the input of the conditioning circuit. The conditioning circuit shapes this pulse, putting it in a useable form for the additional circuits. This pulse starts the charge pump, which charges a capacitor in a linear fashion that can be directly related to the engine speed. At the same time the pulse resets the delay circuit for length of the pulse width. The comparator is off during this period and no output is generated. As soon as the original pulse drops back to zero, the capacitor in the delay circuit begins to charge.

When the charge on the delay capacitor exceeds the charge on the charge pump capacitor the comparator changes state, activating the pulse generator. This pulse turns "ON" the CD ignition module semiconductor. Energy is then transferred to the secondary of the output transformer (T1, Figure 8-5). The high voltage pulse generated here is delivered to the spark plug, causing arcing of the spark gap and igniting the fuel-air mixture in the combustion chamber. As the trigger pulse is generated, all associated circuits are reset, their capacitors discharged. The longer it takes the delay circuit to surpass the charge pump capacitor voltage, the later the trigger pulse will occur, retarding the timing accordingly.

Troubleshooting CD Ignition Systems

The CD ignition systems are designed to be trouble free for the life of the engine. Other than periodically checking/replacing the spark plugs, no maintenance or timing adjustments are necessary or possible. Mechanical systems do occasionally fail or break down however, so the following troubleshooting information is provided to help you get to the root of a reported problem.

CAUTION: High-Energy Electric Spark!

The CD ignition systems produce a high-energy electric spark, but the spark must be discharged, or damage to the system can result. Do not crank or run an engine with a spark plug lead disconnected. Always provide a path for the spark to discharge to ground.

Reported ignition problems are most often due to poor connections. Before beginning the test procedure, check all external wiring. Be certain all ignition-related wires are connected, including the spark plug leads. Be certain all terminal connections fit snugly. Make sure the ignition switch is in the run position.

NOTE: The CD ignition systems are sensitive to excessive load on the kill lead. If a customer complains of hard starting, low power, or misfire under load, it may be due to excessive draw on the kill circuit. Perform the appropriate test procedure.

Test Procedure for Standard (Fixed Timing) CD Ignition System

Isolate and verify the trouble is within the engine ignition system.

1. Locate the plug connectors where the wiring harnesses from the engine and equipment are joined. Separate the connectors and remove the white "kill" lead from the engine connector. Rejoin the connectors and position or insulate the kill lead terminal so it cannot touch ground. Try to start** the engine to verify whether the reported problem is still present.

   a. If the problem is gone, the electrical system on the unit is suspect. Check the key switch, wires, connections, safety interlocks, etc.

   b. If the problem persists the condition is associated with the ignition or electrical system of the engine. Leave the kill lead isolated until all testing is completed.

**NOTE: If the engine starts or runs during any of the testing, you may need to ground the kill lead to shut it down. Because you have interrupted the kill circuit, it may not stop using the switch.

2. Test for spark on both cylinders with Kohler ignition tester (see Section 2). Disconnect one spark plug lead and connect it to the post terminal of the tester. Connect the clip to a good ground, not to the spark plug. Crank the engine and observe the tester spark gap. Repeat the procedure on the other cylinder. Remember to reconnect the first spark plug lead.

   a. If one side is not firing, check all wiring, connections, and terminations on that side. If wiring is okay, replace ignition module and retest for spark.

   b. If the tester shows spark, but the engine misses or won't run on that cylinder, try a new spark plug.

c. If neither side is firing, recheck position of ignition switch and check for shorted kill lead.

Test Procedure for SMART-SPARK™ Ignition Systems

The following procedures are provided for troubleshooting ignition problems on SMART-SPARK™ equipped engines. They will allow you to isolate and pinpoint the failed component(s).

Special Tools Required:

- Hand Tachometer
- Tester* (see Section 2)
- Automotive timing light
- Multi-meter (digital)

Specifications Required:

- Spark plug gap 0.76 mm (0.030 in.)
- Ignition module air gap 0.28/0.33 mm (0.011-0.013 in.), 0.30 mm (0.012 in.) nominal

*NOTE: Ignition tester (see Section 2) **must** be used to test ignition on these engines. Use of any other tester can result in inaccurate findings. Battery on unit **must** be fully charged and properly connected before making any of these tests (a battery that is hooked up or charged backward will crank the engine, but it won't have spark). Be sure drive is in neutral and all external loads are disconnected.

Test 1. Isolate and verify the trouble is within the engine ignition system.

1. Locate the plug connectors where the wiring harnesses from the engine and equipment are joined. Separate the connectors and remove the white "kill" lead from the engine connector. Rejoin the connectors and position or insulate the kill lead terminal so it cannot touch ground. Try to start** the engine to verify whether the reported problem is still present.

   a. If the problem is gone, the electrical system on the unit is suspect. Check the key switch, wires, connections, safety interlocks, etc.

   b. If the problem persists the condition is associated with the ignition or electrical system of the engine. Leave the kill lead isolated until all testing is completed.

**NOTE: If the engine starts or runs during any of the testing, you may need to ground the kill lead to shut it down. Because you have interrupted the kill circuit, it may not stop using the switch.

Test 2. Test for spark.

1. With the engine stopped, disconnect one spark plug lead. Connect the spark plug lead to post terminal of spark tester (see Section 2), and attach tester clip to a good engine ground.

NOTE: If two testers are available, testing can be performed simultaneously for both cylinders. However, if only one tester is available, two individual tests must be performed. The side not being tested must have the spark plug lead connected or grounded. **Do not** crank the engine or perform tests with one spark plug lead disconnected and not grounded or permanent system damage may occur.

2. Crank the engine over, establishing a minimum of **550-600 RPM**, and observe tester(s) for spark.

3. On a twin cylinder engine, repeat the spark test on the opposite cylinder if cylinders are being tested individually.

   a. If both cylinders have good spark, but the engine runs poorly, install new spark plugs gapped at **0.76 mm (0.030 in.)**, and retest engine performance. If problem persists, go to Test 3.

   b. If one cylinder had good spark, but the other cylinder had no spark or intermittent spark, go to Test 3.

   c. If there was no spark or intermittent spark on both cylinders, go to Test 4.

Test 3. Check for timing advance.

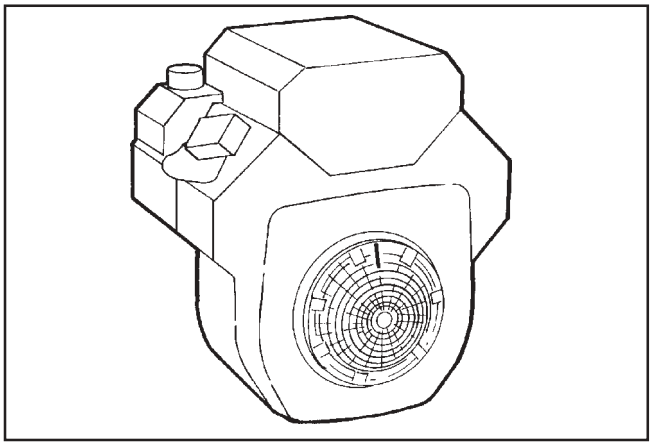

Figure 8-8.

1. Make a line near the edge of the flywheel screen with a marking pen or narrow tape.

2. Connect an automotive timing light to cylinder that had good spark.

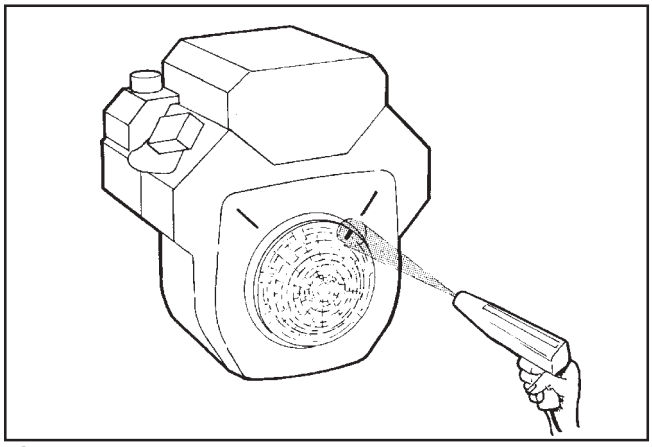

Figure 8-9.

3. Run the engine at idle and use the timing light beam to locate the line on the screen. Draw a line on the blower housing adjacent to the line on the screen. Accelerate to full throttle and watch for movement of the line on the screen relative to the line on the blower housing. If both cylinders had good spark, repeat the test on the other cylinder.

   a. If the line on the screen moved away from the line on the blower housing during acceleration, the SAM is working properly. If it didn't move away, go to Test 5.

   b. If you were able to check timing on both cylinders, the lines you made on the blower housing should be 90° apart. If they're not, go to Test 4.

Test 4. Test the ignition modules and connections.

1. Remove the blower housing from the engine. Inspect the wiring for any damage, cuts, bad crimps, loose terminals, or broken wires.

2. Disconnect the leads from the ignition module(s) and clean all of the terminals (male and female) with aerosol electrical contact cleaner to remove any old dielectric compound, dark residue, dirt, or contamination. Disconnect the spark plug leads from the spark plugs.

3. Remove one of the mounting screws from each of the ignition modules. If the mounting screws are black, remove them both and discard. Replace them with part number M-561025-S. Look in the mounting hole with a flashlight and use a small round wire brush to remove any loose rust from the laminations inside the mounting hole.

4. Refer to the chart on page 8.10 to identify which ignition module(s) you have. If they are the smaller style, check the vendor part number on the face. All modules with vendor part numbers MA-2, MA-2A, or MA-2B (Kohler Part No. 24 584 03) should be replaced with 24 584 11 or 24 584 15-S. For small modules with vendor numbers MA-2C or MA-2D (Kohler Part No. 24 584 11), or the larger style modules (24 584 15-S and 24 584 36-S), use a digital ohmmeter to check the resistance values and compare them to the table following. When testing resistance to the laminations, touch the probe to the laminations inside the screw hole, as some laminations have a rust preventative coating on the surface which could alter the resistance reading.

   a. If all of the resistance values are within the ranges specified in the table, go to step 5.

   b. If any of the resistance values are not within the ranges specified in the table,# that module is faulty and must be replaced.

   #NOTE: The resistance values apply only to modules that have been on a running engine. New service modules may have higher resistance until they have been run.

Ignition Module Resistance Table

24 584 03 or 24 584 11 (1 11/16 in. H) | **24 584 15-S or 24 584 36-S** (2 1/16 in. H)

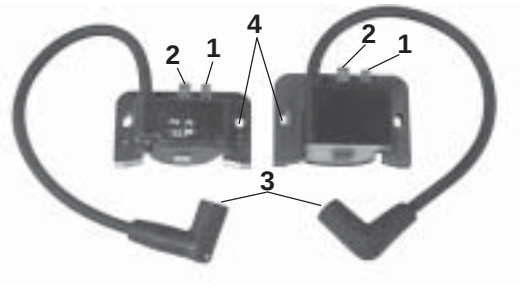

Test (Use Digital Ohmmeter)	24 584 03 24 584 11 (1 11/16 in. H)	24 584 15-S (2 1/16 in. H)	24 584 36-S (2 1/16 in. H)
From No. 1 to 4	945 to 1175 ohms	890 to 1175 ohms	590 to 616 ohms
From No. 2 to 4	149 to 166 ohms	119 to 136 ohms	183 to 208 ohms
From No. 3 to 4	3750 to 7000 ohms	5600 to 9000 ohms	8000 to 40,000 ohms

5. Check and/or adjust the ignition module air gap(s). An air gap of **0.28/0.33 mm (0.011/0.013 in.)** must be maintained under all three legs of the ignition module(s). Checking/adjusting should be performed with the parts at room temperature.

   a. If the module was not loosened or replaced, check that the specified air gap is present under all three legs. If the gap is correct, reinstall the second mounting screw removed earlier and recheck gap after tightening.

   b. If the gap is incorrect, or the module was loosened or replaced, adjust the gap as follows:

      1) Turn the flywheel magnet away from the module position.

      2) Attach the module to the mounting legs, pull it away from the flywheel, and snug the screws to hold it temporarily.

      3) Rotate the flywheel so the magnet is centered under the module.

      4) Position a **0.30 mm (0.012 in.)** feeler gauge between the magnet and all three legs of the module. The ignition module air gap is critical to proper system performance. **Do not** attempt to set it with a business card or folded microfiche card, use the feeler gauge specified.

      5) Loosen the mounting screws, allow the magnet to pull the module down against the feeler gauge, and retighten the mounting screws.

      6) Rotate the flywheel to remove the feeler gauge, position the magnet back under the module, and recheck that the specified gap, minimum of **0.28 mm (0.011 in.)** exists under each leg of the module. When you are certain the gap is correct, torque the module mounting screws to **4.0 N·m (35 in. lb.)**. On a twin cylinder engine, repeat these 6 steps to set the opposite side ignition module.

6. Reattach the lead wires to the ignition module(s), noting if resistance is felt, indicating a snug fit between the male and female terminals. If any connections do not feel snug, disconnect the lead, lightly pinch the female terminal with a pliers, and recheck the fit.

7. When the integrity of all connections has been verified, repeat the spark test (Test 2).

   a. If a strong, steady spark is now present (both sides on a twin), your problem should be corrected. Go to step 4 of Test 5.

   b. If there is still a spark problem, perform all of Test 5.

Test 5. Test the SAM.

1. Trace the red power source lead from the SAM to the harness connection. Separate the connector and connect the red lead of a DC voltmeter to the harness terminal. Trace the ground lead from the SAM (black on singles, green on twins) to the grounding screw. Connect the black voltmeter lead to the eyelet terminal of the ground lead or the ground screw/bolt. Check the voltage with the key switch in both the “START” and “RUN” positions. A minimum of 7.25 volts must be present.

a. If correct voltage is not measured, connect black voltmeter lead directly to the negative (-) post of the battery and test voltage again in both key positions. If correct voltage is now indicated, check the ground circuit connections. If the ground screw/bolt or any other fasteners in the ground circuit are black (oxide-coated), replace them with zinc plated (silver colored) fasteners.

b. If correct voltage is still not indicated, check the harness connector terminal for a good connection and crimp to the lead. Then trace the power source circuit back through the harness, key switch, etc., looking for any poor connections, or faulty circuits.

2. Disconnect all of the SAM leads, isolating it from the engine. Test the SAM according to style with tester **25 761 21-S** (tests ASAM style modules only), or tester **25 761 40-S** (tests both ASAM and DSAM style modules). Use the test instructions following, or those provided with the tester.

3. Reattach the SAM leads, verifying a snug fit at the ignition module terminals. If any connections do not feel snug, disconnect the lead, lightly pinch the female terminal with a pliers, and recheck the fit.

4. Seal the base of the ignition module connections with GE/Novaguard G661 (see Section 2) Fel-Pro Lubri-Sel dielectric compound. The beads should overlap between the two connections† to form a solid bridge of compound. Do not put any compound inside the connectors.

   † The 24 584 15-S ignition modules have a separator/barrier between the terminals. On these modules, seal the base of the terminal if any portion of it is exposed, but it is not necessary to have overlapping beads of sealant between the connections.

5. Test for spark (Test 2) to be sure the system is working, before you reinstall the blower housing. If there is still a spark problem on one side, replace that ignition module and recheck spark.

To Test – Using 25 761 21-S Tester

ASAM (only) Test Procedure

NOTE: The SAM **must** be at room temperature when tested. Disconnect **all** of the SAM leads, isolating it from the main wiring harness and the ignition module(s). Testing may be performed with the module mounted or loose. The figures show the part removed from the engine for clarity.

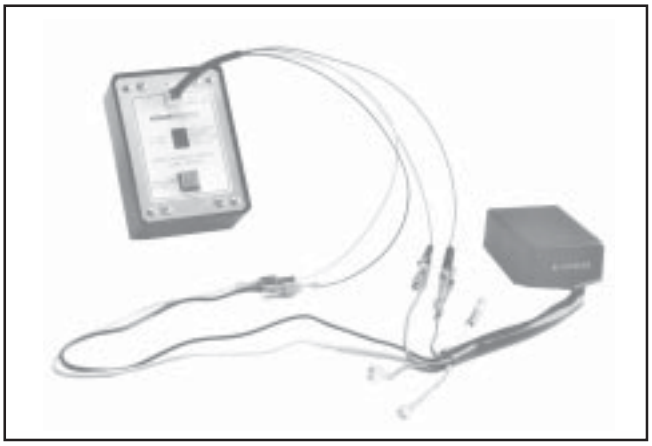

Figure 8-10.

1. Connect the tester to the SAM as follows:

Attach:
A. The **yellow** tester lead to the **long yellow** module lead.
B. The **brown** tester lead to the **long brown** module lead.
C. The **red** tester lead to the **red** module lead.
D. The **green** tester lead to the **green** module lead.

Caution: Do not allow the alligator clip leads to touch each other.

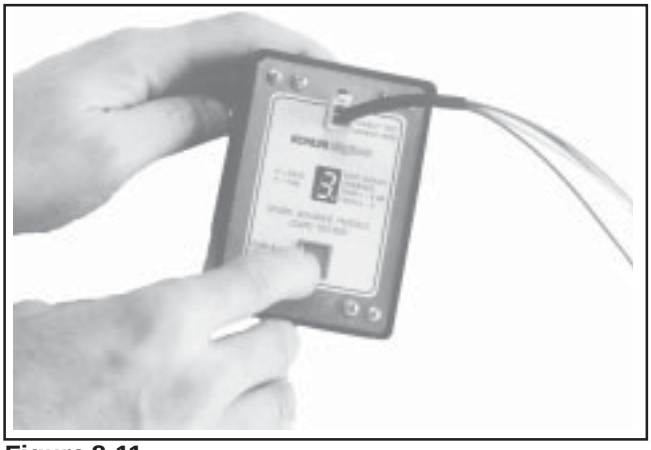

Figure 8-11.

8

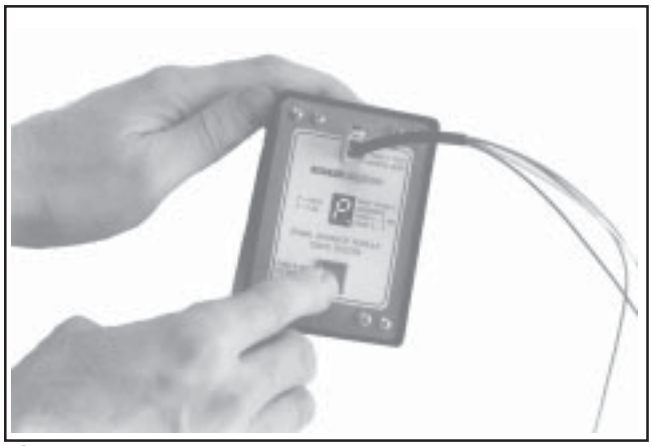

Figure 8-12.

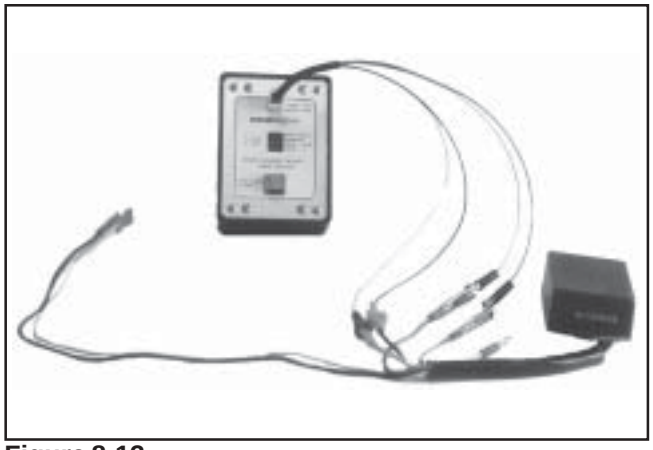

Figure 8-13.

2. Check the SAM part number stamped on the side of the housing. Verify that you have an analog SAM (ASAM) Part No. 24 584 10 or lower, not a digital SAM (DSAM) Part No. 24 584 18 and higher. Follow sub-step a for testing an ASAM with this tester. Digital SAM (DSAM) modules require Tester 25 761 40-S for proper testing.

   a. Depress the tester button and hold it down. After approximately four seconds, a numerical sequence should be displayed, beginning with 1 or 2 and continuing to 8 or 9, followed by a letter "P" (pass) or "F" (fail). See Figures 8-11 and 8-12. **DO NOT** release the tester button until the test cycle completes and the display goes off*. If you get a "-" sign instead of the numerical sequence, and/or an "F" at the end of the cycle, the SAM is probably bad. Recheck all of the connections, check the condition of the tester battery** and repeat the test. If you get the "-" sign and/or "F" again in the retest, replace that SAM.

*IMPORTANT!

Allow 15-20 seconds for the tester to clear and reset itself between tests or if test is interrupted before completion of test cycle. Otherwise, a false reading may be displayed in the form of a "-" or a faint "8".

3. Disconnect the yellow and brown tester leads from the long module leads. Connect the brown tester lead to the short brown module lead. Connect the yellow tester lead to the short yellow (or pink) module lead. See Figure 8-13. Leave the red and green leads connected. Repeat step 2.

**The tester is powered by a 9-volt battery. Most SAMs are designed to operate down to a minimum of 7.25 volts. If the tester battery drops below that level, incorrect test readings will result. The tester battery should be checked periodically by connecting a DC voltmeter between the red and green lead wires, with the tester connected to a SAM. Press and hold the test button for a full test cycle (''F'' or "P'' appears and then display shuts off), while monitoring the voltage reading on the voltmeter. If the voltage drops below 7.5 at any time during the cycle, the 9-volt tester battery must be replaced. Use an extended life (alkaline) battery.

To replace the battery, remove the outer set of screws on the faceplate and carefully lift the panel from the body. Unplug the connector and pull battery (with mounting tape) off the back of the tester. Attach the connector to the new battery and mount the battery to the case with double-backed tape. Reinstall the faceplate and secure with the four screws.

To Test – Using 25 761 40-S Tester

DSAM/ASAM Test Procedure

NOTE: The SAM **must** be at room temperature when tested. Disconnect **all** of the SAM leads, isolating it from the main wiring harness and the ignition module(s). Testing may be performed with the module mounted or loose. The figures show the part removed from the engine for clarity. See Figure 8-14.

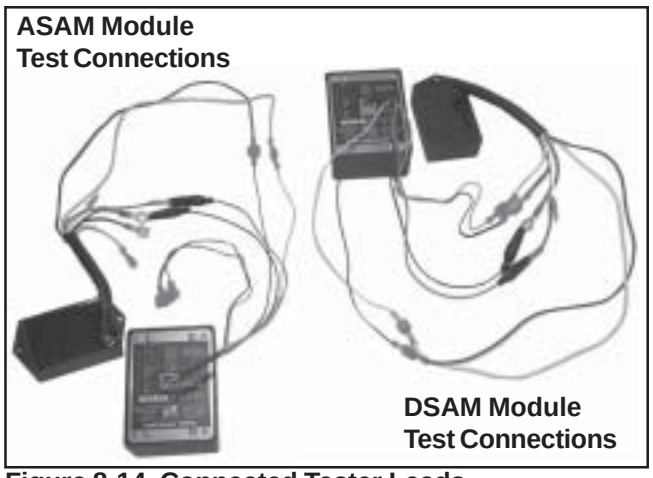

Figure 8-14. Connected Tester Leads.

The test procedure for twin cylinder SAMs will vary slightly, depending on whether the module is analog (ASAM) or digital (DSAM).

1. Check the SAM part number stamped on the end of the housing.

   a. If it is an ASAM (24 584 09 or 24 584 10), separate the short yellow and brown leads from the long ones. Each set will be tested separately. Connect the tester to the SAM as follows:

      - **Yellow** tester lead to **long yellow** module lead.
      - **Brown** tester lead to **long brown** module lead.
      - **Red** tester lead to the **red** module lead.
      - **Black** tester lead to the **black or green** module lead.

      The remaining tester leads (pink and brown with black band) are not used for testing ASAMs.

   b. If it is a DSAM (all except 24 584 09 or 24 584 10), connect the tester as follows:

      - **Yellow** tester lead to the **long yellow** module lead.
      - **Brown** tester lead to the **long brown** module lead.
      - **Red** tester lead to the **red** module lead.
      - **Black** tester lead to the **green** or **black** module ground lead with the eyelet# terminal.
      - **Pink** tester lead to the short **yellow** or **pink** module lead.
      - **Brown** tester lead with **black band or terminal** to the short brown module lead.

#NOTE: Some modules contain two black ground leads, with one containing a white stripe. **Do not** connect to the black/white lead with the bullet connector or a "Fail" test result will occur, regardless of actual condition.

Caution: Do not allow alligator clip leads to touch each other.

2. Recheck the SAM part number, noting the last two digits. Refer to the table below or on the tester faceplate to determine the test number to be used.

SAM Part No.	12 584 12 24 584 09 24 584 10	24 584 30 24 584 31	24 584 33 24 584 34	24 584 32
Test No.	1	2	3	4

SAM Part No.	-	24 584 18 24 584 27	24 584 19	24 584 38 24 584 39
Test No.	5	6	7	8

3. Depress the tester button repeatedly until the correct test number appears on the display. After a few seconds, the test number will flash three times and the test will begin. A reverse numerical sequence will be displayed, starting with a 6 and progressing down to 1, followed by a "P" (pass) or "F" (fail), indicating the condition of the part*. See Figures 8-15 and 8-16. If testing an ASAM, return to step 1 and move the yellow and brown tester leads to the short set of module leads, then repeat the test.

4. If you get a "-" sign instead of the numerical sequence, and/or an "F" at the end of the test cycle, recheck all of the connections, check the condition of the tester battery** and repeat the test. If you get the "-"or "F" sign again in the retest replace the SAM.

*IMPORTANT!

Allow 15-20 seconds for the tester to clear and reset itself between tests or if the test is interrupted before completion of the test cycle. Otherwise, a false reading may be displayed in the form of a "-" or a faint "8".

Figure 8-15. Select Test Number.

Figure 8-16. “Pass” Indicator.

**The tester is powered by a 9-volt battery. Most SAMs are designed to operate down to a minimum of 7.25 volts. If the tester battery drops below that level, incorrect test readings will result. The tester battery should be checked periodically by connecting a DC voltmeter between the red and green lead wires, with the tester connected to a SAM. Press and hold the test button for a full test cycle (‘‘F’’ or “P’’ appears and then display shuts off), while monitoring the voltage reading on the voltmeter. If the voltage drops below 7.5 at any time during the cycle, the 9-volt tester battery must be replaced. Use an extended life (alkaline) battery.

To replace the battery, remove the outer set of screws on the faceplate and carefully lift the panel from the body. Unplug the connector and pull battery (with mounting tape) off the back of the tester. Attach the connector to the new battery and mount the battery to the case with double-backed tape. Reinstall the faceplate and secure with the four screws.

Battery Charging System

General

Most engines are equipped with a 15 or 20 amp regulated charging system. Some have a 25 amp regulated charging system. See Figure 8-17 and 8-18 for the 15/20/25 amp charging system diagram. Some engines utilize a 3 amp unregulated system with optional 70 watt lighting circuit. Refer to Figure 8-22.

NOTE: Observe the following guidelines to avoid damage to the electrical system and components:

- Make sure the battery polarity is correct. A negative (-) ground system is used.
- Disconnect the rectifier-regulator plug and/or the wiring harness plug before doing any electric welding on the equipment powered by the engine. Also, disconnect all other electrical accessories in common ground with the engine.
- Prevent the stator (AC) leads from touching or shorting while the engine is running. This could damage the stator.

15/20/25 Amp Regulated Charging System

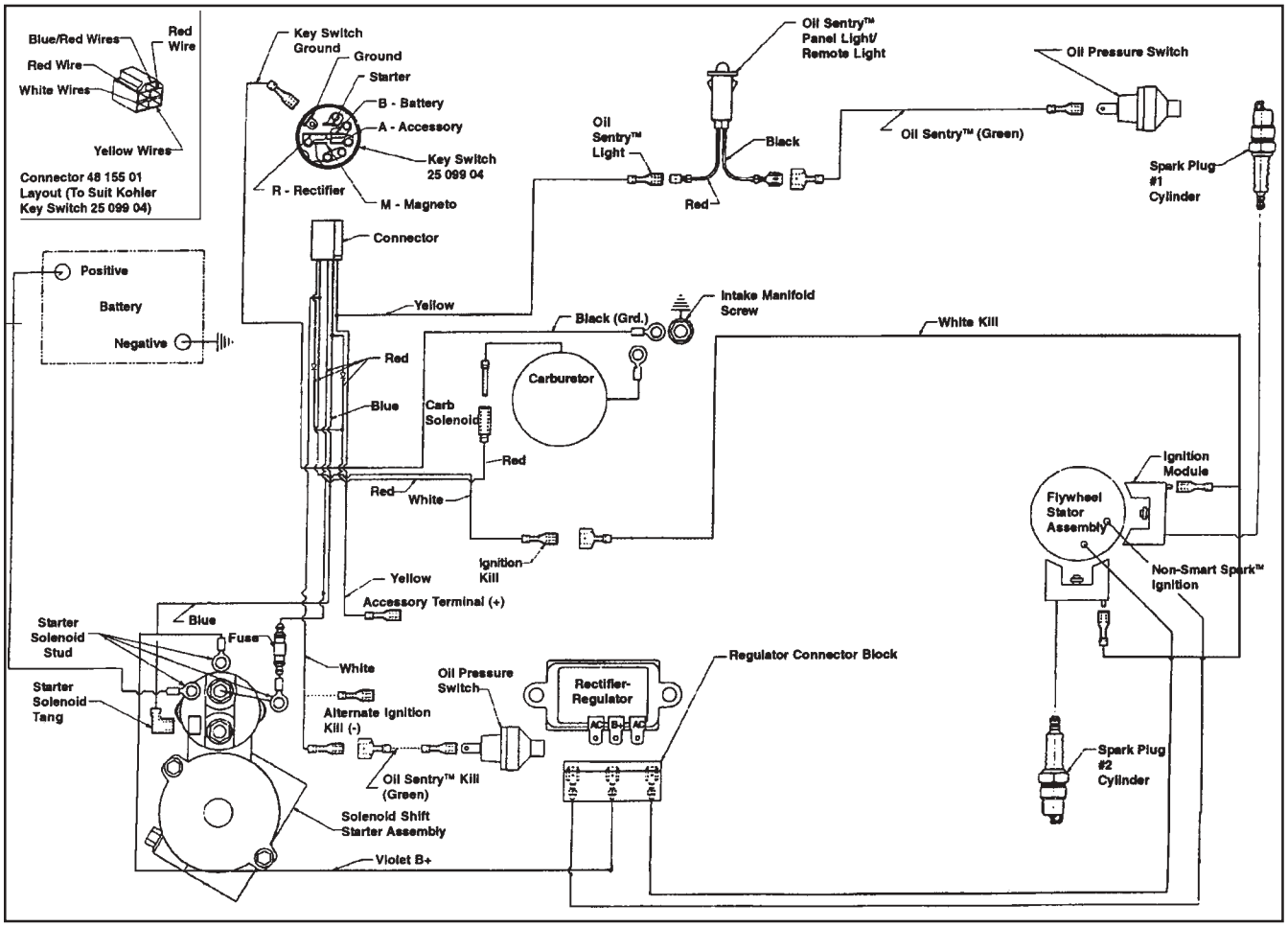

Figure 8-17. Wiring Diagram - 15/20/25 Amp Regulated Battery Charging System with Fixed Timing.

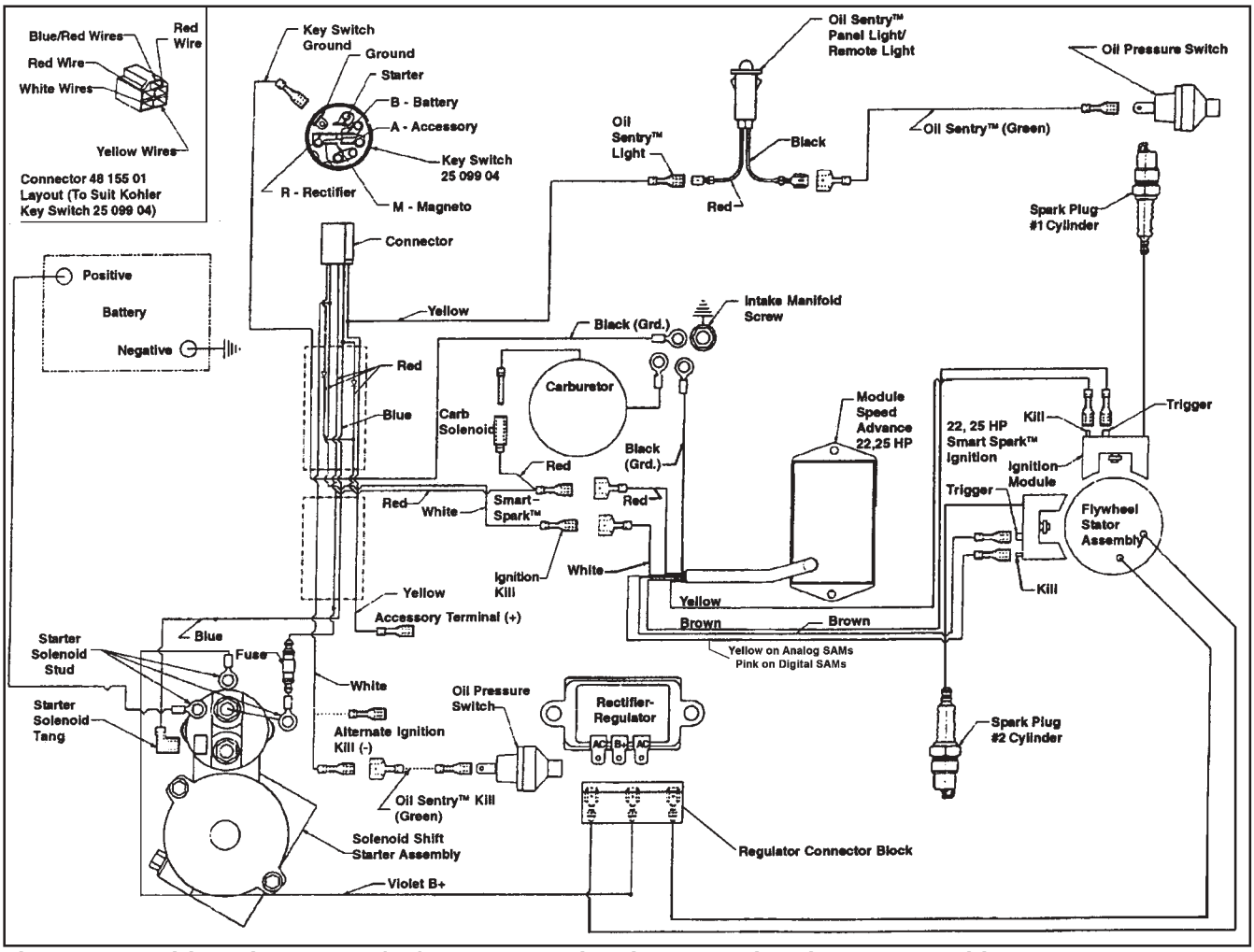

Figure 8-18. Wiring Diagram - 15/20/25 Amp Regulated Battery Charging System with SMART-SPARK™.

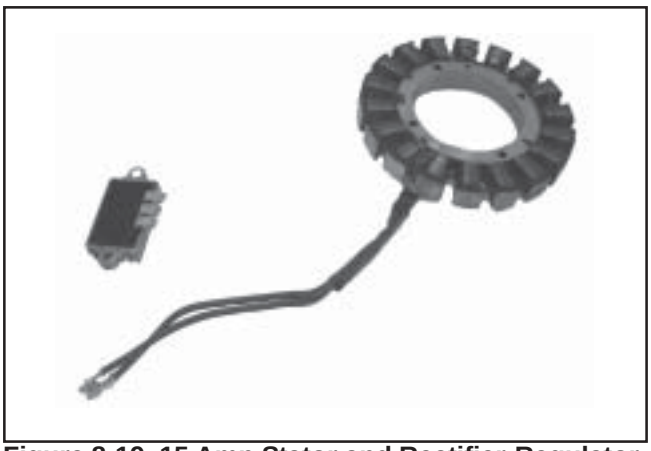

Figure 8-19. 15 Amp Stator and Rectifier-Regulator.

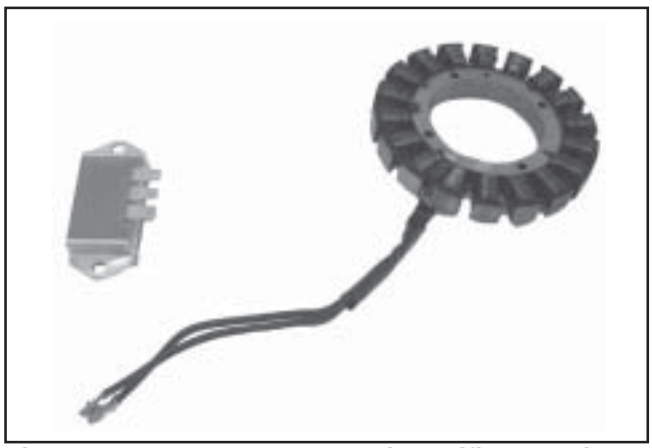

Figure 8-20. 20 Amp Stator and Rectifier-Regulator.

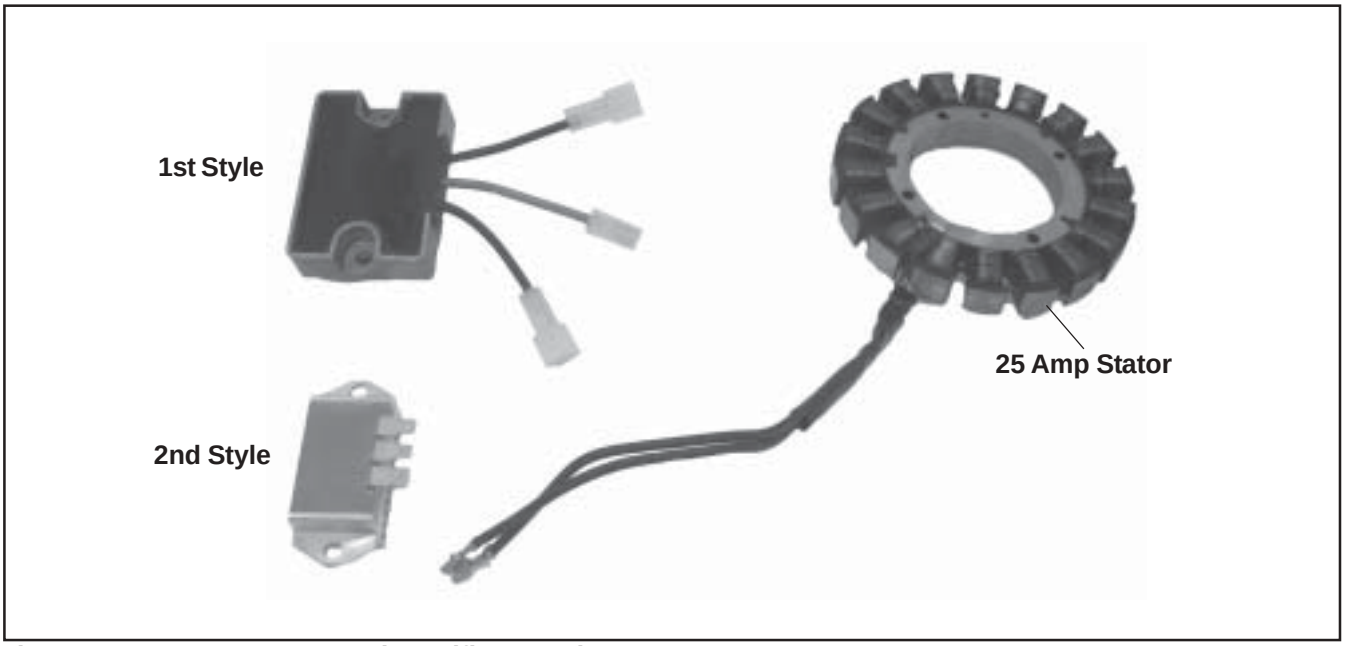

Figure 8-21. 25 Amp Stator and Rectifier-Regulators.

3 Amp Unregulated Charging System

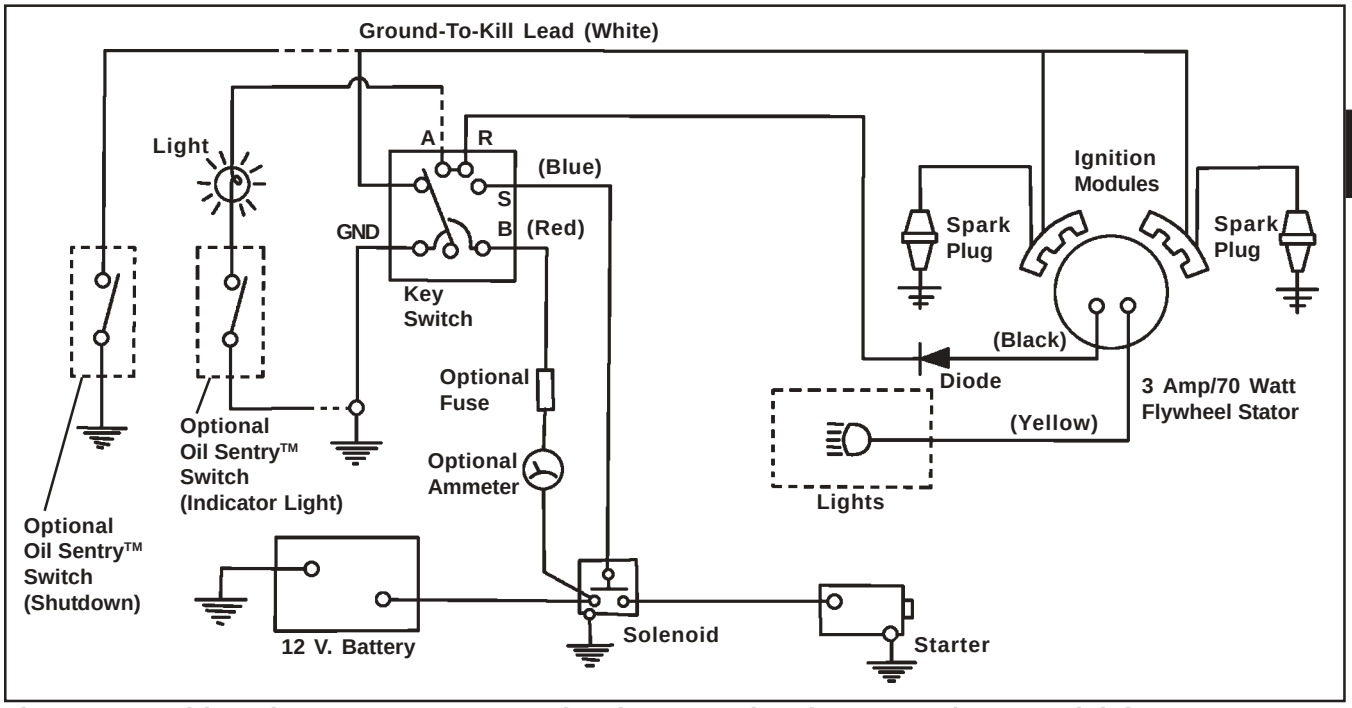

Figure 8-22. Wiring Diagram - 3 Amp Unregulated Battery Charging System/70 Watt Lighting.

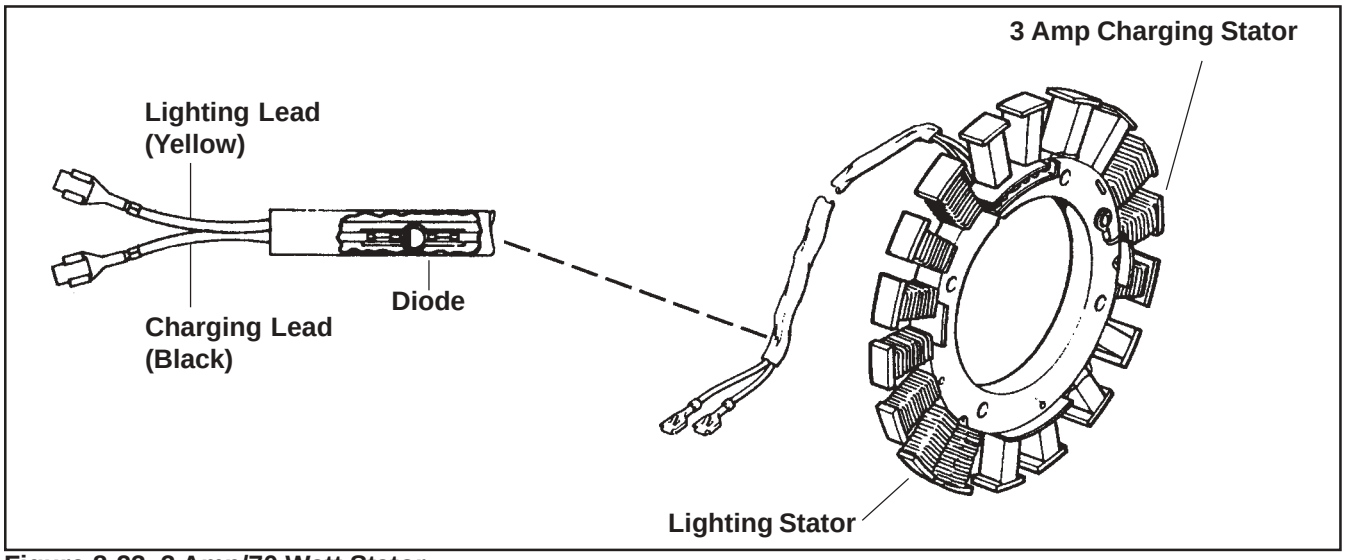

Figure 8-23. 3 Amp/70 Watt Stator.

Stator

The stator is mounted on the crankcase behind the flywheel. Follow the procedures in Section 9 - "Disassembly" and Section 11 - "Reassembly" if stator replacement is necessary.

Rectifier-Regulator

The rectifier-regulator is mounted on the blower housing. See Figure 8-24. To replace it, disconnect the plug(s), remove the two mounting screws, and ground wire or metal grounding strap.

NOTE: When installing the rectifier-regulator, take note of the terminal markings and install the plug(s) accordingly.

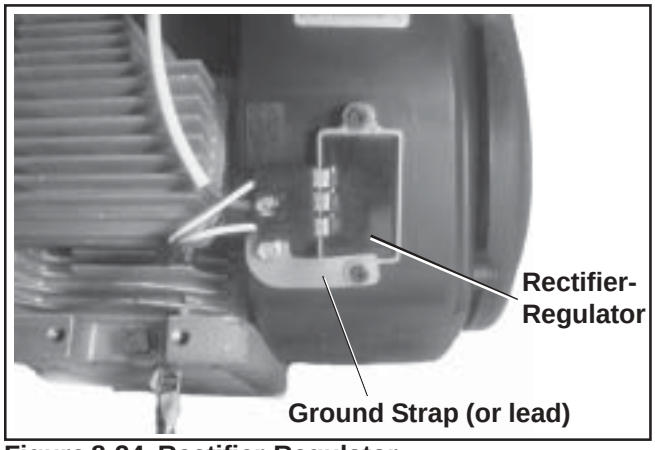

Figure 8-24. Rectifier-Regulator.

Testing of the rectifier-regulator may be performed as follows, using the appropriate Rectifier-Regulator Tester (see Section 2).

To Test –

NOTE: Disconnect all electrical connections attached to the rectifier-regulator. Testing may be performed with the rectifier-regulator mounted or loose. The figures show the part removed from the engine for clarity. Repeat the applicable test procedure **two or three times** to determine the condition of the part.

15 Amp Rectifier-Regulators

1. Connect the tester ground lead (with spring clamp) to the body of the rectifier-regulator being tested.

2. Connect the tester red lead to the B+ terminal of the rectifier-regulator and the two black tester leads to the two AC terminals. See Figure 8-25.

Figure 8-25.

3. Plug the tester into the proper AC outlet/power for tester being used. Turn on the power switch. See Figure 8-26. The ''POWER'' light should be illuminated and one of the four status lights may be on as well. This **does not** represent the condition of the part.

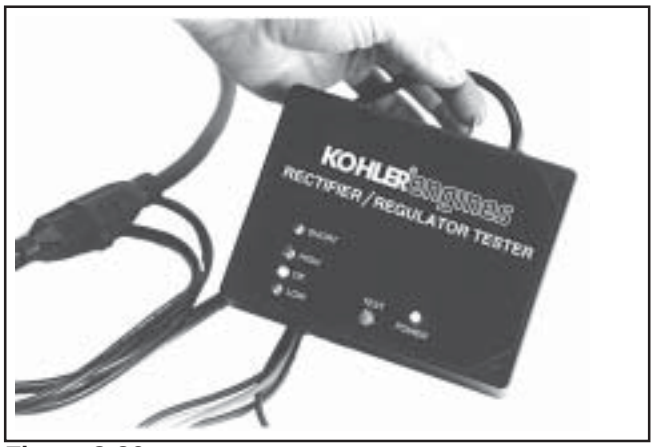

Figure 8-26.

4. Press the ''TEST'' button until a "click" is heard and then release. See Figure 8-27. Momentarily one of the four lights will illuminate, indicating the condition of the part.

Figure 8-27.

a. If the "OK" (green) light comes on and stays steady, the part is good and may be used.

b. If any other light is displayed,* the rectifier-regulator is faulty and should not be used.

*NOTE: A flashing "LOW" light can also occur as a result of an inadequate ground lead connection. Make certain connection location is clean and clamp is secure.

20/25 Amp Rectifier-Regulators

1. Connect the single lead adapter in between the B+ (center) terminal of rectifier-regulator being tested and the squared single end of the tandem adapter lead. See Figure 8-28.

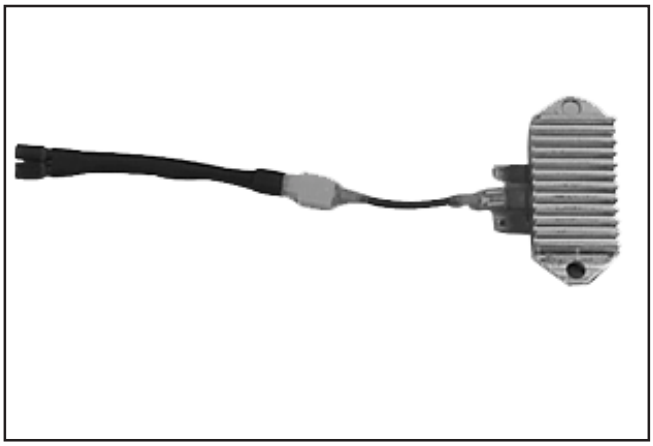

Figure 8-28.

2. Connect the tester ground lead (with spring clamp) to the body of the rectifier-regulator.

3. Connect the red lead and one of the black leads to the pair of terminals on the open end of the tandem adapter lead (connections are not location specific).

4. Connect the remaining black lead from the tester to one of the outer AC terminals on the rectifier-regulator. See Figure 8-29.

Figure 8-29.

5. Plug the tester into the proper AC outlet/power for tester being used. Turn on the power switch. The ''POWER'' light should be illuminated and one of the four status lights may be on as well. See Figure 8-26. This **does not** represent the condition of the part.

6. Press the ''TEST'' button until a ''click'' is heard and then release. See Figure 8-27. Momentarily one of the four lights will illuminate indicating the **partial condition** of the part.

   a. If the ''OK'' (green) light comes on, disconnect the tester black lead attached to one AC terminal and reconnect it to the other AC terminal. Repeat the test. If the ''OK'' (green) light comes on again, the part is good and may be used.

   b. If any other light is displayed* in either of the tests, the rectifier-regulator is faulty and should not be used.

*NOTE: A flashing ''LOW'' light can also occur as a result of an inadequate ground lead connection. Make certain the connection location is clean and the clamp is secure.

25 Amp Rectifier-Regulators (Original Style)

1. Connect the squared single end of the tandem lead adapter to the B+ (center/red) lead of rectifier-regulator being tested. See Figure 8-30.

Figure 8-30.

2. Connect the ground lead of tester (with spring clamp), to the housing of rectifier-regulator.

3. Connect the red lead and one of the black leads from the tester to the pair of terminals on opposite end of adapter lead (connections are not location specific).

4. Connect the remaining black lead from tester to one of the black AC (outside) leads from rectifier-regulator. See Figure 8-31.

Figure 8-31.

5. Plug the tester into the proper AC outlet/power for tester being used. Turn on the power switch. The ''POWER'' light should be illuminated and one of the four status lights may be on as well. See Figure 8-26. This **does not** represent the condition of the part.

6. Press the ''TEST'' button until a "click" is heard and then release. See Figure 8-27. Momentarily one of the four lights will relight indicating the **partial condition** of the part.

   a. If the "OK" (green) light comes on, disconnect the tester black lead attached to the AC lead, reconnect it to the opposite side AC lead, and repeat the test. If the "OK" light (green) again comes on, the part is good and may be used.

   b. If any other light is displayed* in either of the tests, the rectifier-regulator is faulty and should not be used.

*NOTE: A flashing "LOW" light can also occur as a result of an inadequate ground lead connection. Make certain connection location is clean and clamp is secure.

4 Amp Unregulated Rectifiers

1. Connect the tester ground lead (with spring clamp), to the body of rectifier being tested.

2. Connect the red tester lead to the B+ (center) terminal of the rectifier and the two black tester leads to the two AC (outside) terminals. See Figure 8-32.

Figure 8-32.

3. Plug the tester into the proper AC outlet/power for tester being used. Turn on the power switch. The ''POWER'' light should be illuminated and one of the four status lights may be on as well. See Figure 8-26. This **does not** represent the condition of the part.

4. Press the ''TEST'' button until a "click" is heard and then release. See Figure 8-27. Momentarily either the ''HIGH'', ''LOW'', or ''SHORT'' light will flash.

   a. If the "HIGH" light flashes on/off, the part is good and may be used.

   b. If any other light is displayed* the rectifier is faulty and should not be used.

*NOTE: A flashing "LOW" light can also occur as a result of an inadequate ground lead connection. Make certain connection location is clean and clamp is secure.

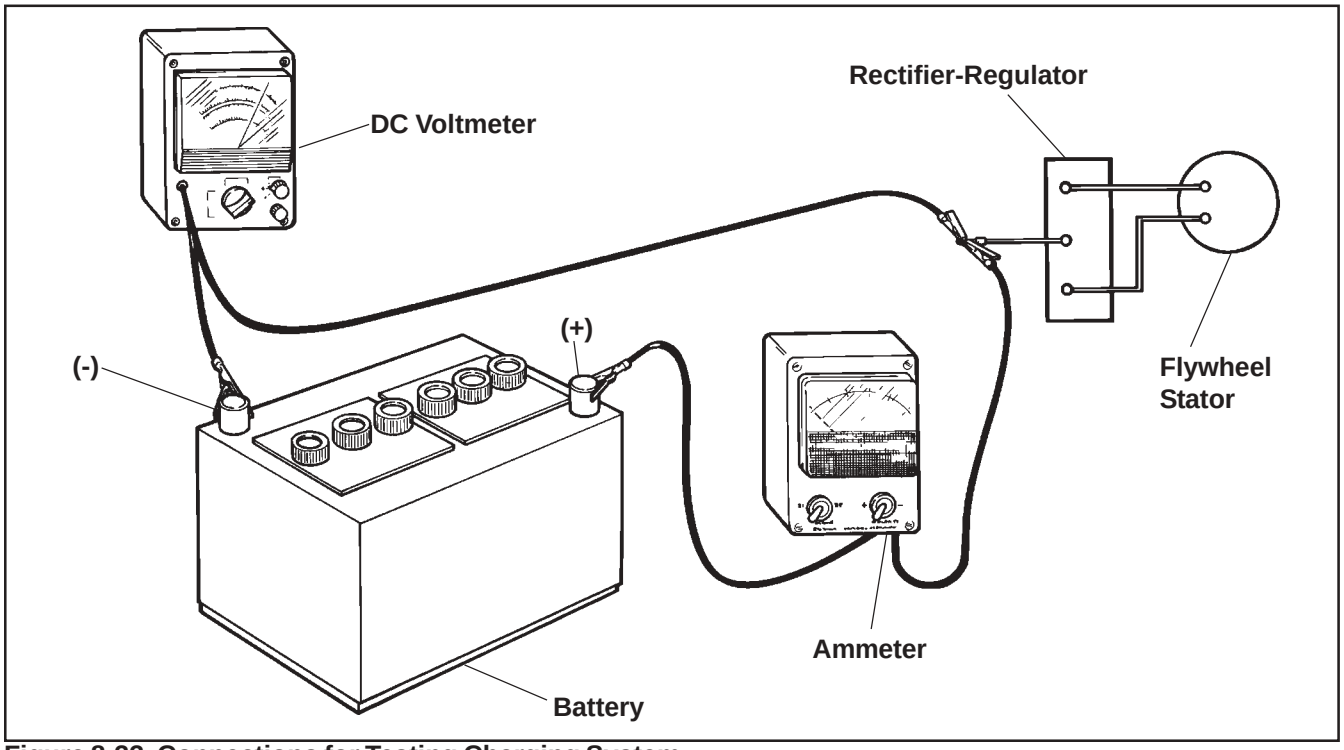

Figure 8-33. Connections for Testing Charging System.

Troubleshooting Guide

15/20/25 Amp Battery Charging Systems

When problems occur in keeping the battery charged or the battery charges at too high a rate, the problem can usually be found somewhere in the charging system or with the battery.

NOTE: **Always zero ohmmeter on each scale before testing** to ensure accurate readings. Voltage tests should be made with the engine running at 3600 RPM - no load. **The battery must be good and fully charged.**

Problem	Test	Conclusion
No Charge to Battery	1. Trace B+ lead from rectifier-regulator to key switch, or other accessible connection. Disconnect it from switch or connection. Connect an ammeter from loose end of B+ lead to positive terminal of battery. Connect DC voltmeter from loose end of B+ lead to negative terminal of battery. With engine running at 3600 RPM, read voltage on voltmeter. If voltage is 13.8 volts or more, place a minimum load of 5 amps* on battery to reduce voltage. Observe ammeter. *NOTE: Turn on lights, if 60 watts or more. Or place a 2.5 ohm, 100 watt resistor across battery terminals.	1. If voltage is 13.8-14.7 and charge rate increases when load is applied, the charging system is OK and battery was fully charged. If voltage is less than 13.8 or charge rate does not increase when load is applied, test stator (Tests 2 and 3).
	2. Remove connector from rectifier-regulator. With engine running at 3600 RPM, measure AC voltage across stator leads using an AC voltmeter.	2. If voltage is **28 volts or more,** stator is OK. Rectifier-regulator is faulty. Replace the rectifier-regulator. If voltage is **less than 28 volts,** stator is probably faulty and should be replaced. Test stator further using an ohmmeter (Test 3).
	3a. With engine stopped, measure the resistance across stator leads using an ohmmeter.	3a. If resistance is **0.064/0.2 ohms,** the stator is OK. If the resistance is **infinity ohms,** stator is open. Replace stator.
	3b. With the engine stopped, measure the resistance from each stator lead to ground using an ohmmeter.	3b. If the resistance is **infinity ohms** (no continuity), the stator is OK (not shorted to ground). If resistance (or continuity) **is measured,** the stator leads are shorted to ground. Replace stator.
Battery Continuously Charges at High Rate	1. Perform same test as step 1 above.	1. If the voltage is **14.7 volts or less** the charging system is OK. The battery is unable to hold a charge. Service battery or replace as necessary. If voltage is **more than 14.7 volts,** the rectifier-regulator is faulty. Replace rectifier-regulator.

Troubleshooting Guide

3 Amp Battery Charging System with 70 Watt Lighting Stator

NOTE: Zero ohmmeters on each scale to ensure accurate readings. Voltage tests should be made with engine running at 3000 RPM - no load. **Battery must be good and fully charged.**

Problem	Test	Conclusion
No Charge to Battery	1. With engine running at 3000 RPM, measure voltage across battery terminals using a DC voltmeter.	1. If voltage is more than 12.5 volts, charging system is OK. If voltage is 12.5 volts or less, the stator or diode are probably faulty. Test the stator and diode (Tests 2, 3 and 4).
	2. Disconnect the charging lead from battery. With engine running at 3000 RPM, measure voltage from charging lead to ground using a DC voltmeter.	2. If voltage is **28 volts or more**, stator winding is OK. If voltage is **less than 28 volts**, test stator using an ohmmeter (Tests 3 and 4).
	3. With charging lead disconnected from battery and engine stopped, measure resistance from charging lead to ground using an ohmmeter. Note reading. Reverse the leads and measure resistance again. In one direction, the resistance should be infinity ohms (open circuit). With the leads reversed, some resistance should be measured (about midscale on Rx1 range).	3. If resistance is low in both directions, the diode is shorted. Replace the diode. If resistance is high in both directions, the diode or stator winding is open. (Use Test 4.)
	4. Cut the sleeving on the charging lead to expose the diode connections. Measure the resistance from the stator side of diode to ground using an ohmmeter.	4. If resistance is approximately **1.07 ohms**, stator winding is OK. If resistance is **0 ohms**, stator winding is shorted. Replace stator. If resistance is **infinity ohms**, stator winding or lead is open. Replace stator.
No Lights	1. Make sure lights are not burned out.	1. Replace burned out lights.
	2. Disconnect the lighting lead from the wiring harness. With engine running at 3000 RPM, measure voltage from lighting lead to ground using an AC voltmeter.	2. If voltage is **15 volts or more**, stator is OK. Check for loose connections or shorts in wiring harness. If voltage is **less than 15 volts**, test stator using an ohmmeter (Test 3).
	3. With engine stopped, measure the resistance of stator from lighting lead to ground using an ohmmeter.	3. If resistance is approximately **0.4 ohms**, stator is OK. If resistance is **0 ohms**, stator is shorted. Replace stator. If resistance is **infinity ohms**, stator or lighting lead is open. Replace stator.

Electric Starting Motors

Some engines in this series use inertia drive starting motors while most use solenoid shift starters. The inertia drive types are covered first and the solenoid shift types following.

Starting Motor Precautions

NOTE: Do not crank the engine continuously for more than 10 seconds at a time. If the engine does not start, allow a 60 second cool-down period between starting attempts. Failure to follow these guidelines can burn out the starter motor.

NOTE: If the engine develops sufficient speed to disengage the starter but does not keep running (a false start), the engine rotation must be allowed to come to a complete stop before attempting to restart the engine. If the starter is engaged while the flywheel is rotating, the starter pinion and flywheel ring gear may clash, resulting in damage to the starter.

NOTE: If the starter does not crank the engine, shut off the starter immediately. Do not make further attempts to start the engine until the condition is corrected.

NOTE: Do not drop the starter or strike the starter frame. Doing so can damage the starter.

Starter Removal and Installation

Refer to the "Disassembly" and "Reassembly" Sections for starter removal and installation procedures.

Inertia Drive Electric Starters

This subsection covers the operation, troubleshooting, and repair of the inertia drive, permanent magnet electric starters.

Troubleshooting Guide – Starting Difficulties

Problem	Possible Fault	Correction
Starter Does Not Energize	Battery	1. Check the specific gravity of battery. If low, recharge or replace battery as necessary.
	Wiring	1. Clean corroded connections and tighten loose connections. 2. Replace wires in poor condition and with frayed or broken insulation.
	Starter Switch or Solenoid	1. By-pass the switch or solenoid with a jumper wire. If starter cranks normally, replace the faulty components. **Solenoid Shift Starters:** Perform individual solenoid test procedure. See pages 8.39 and 8.40.
Starter Energizes but Turns Slowly	Battery	1. Check the specific gravity of battery. If low, recharge or replace battery as necessary.
	Brushes	1. Check for excessively dirty or worn brushes and commutator. Clean using a coarse cloth (not emery cloth). 2. Replace brushes if excessively or unevenly worn.
	Transmission or Engine	1. Make sure the clutch or transmission is disengaged or placed in neutral. This is especially important on equipment with hydrostatic drive. The transmission must be exactly in neutral to prevent resistance which could keep the engine from starting. 2. Check for seized engine components such as the bearings, connecting rod, and piston.

Operation - Inertia Drive Starters

When power is applied to the starter, the armature rotates. As the armature rotates, the drive pinion moves out on the splined drive shaft and into mesh with the flywheel ring gear. When the pinion reaches the end of the drive shaft, it rotates the flywheel and "cranks" the engine.

When the engine starts, the flywheel rotates faster than the starter armature and drive pinion. This moves the drive pinion out of mesh with the ring gear and into the retracted position. When power is removed from the starter, the armature stops rotating and the drive pinion is held in the retracted position by the anti-drift spring.

Starter Drive Service

Every **500 hours** of operation (or annually, whichever occurs first), clean and lubricate the splines on the starter drive shaft. If the drive pinion is worn, or has chipped or broken teeth, it must be replaced. See Figure 8-34.

It is not necessary to completely disassemble the starter to service the drive components.

Style "A" Drive Service

1. Remove the starter from the engine and remove the dust cover.

2. Hold the drive pinion in a vice with soft jaws when removing or installing the stop nut. The armature will rotate with the nut until the drive pinion stops against internal spacers.

NOTE: Do not overtighten the vise as this can distort the drive pinion.

3. Remove the stop nut, stop gear spacer, anti-drift spring, dust cover spacer, and drive pinion.

4. Clean the splines on drive shaft thoroughly with solvent. Dry the splines thoroughly.

5. Apply a small amount of Kohler electric starter drive lubricant, (see Section 2) to the splines. The use of other lubricants may cause the drive pinion to stick or bind.

6. Apply a small amount of Loctite® No. 271 to the stop nut threads.

7. Install the drive pinion, dust cover spacer, anti-drift spring, stop gear spacer, and stop nut. Torque the stop nut to **17.0-19.2 N·m (150-170 in. lb.)**. Reinstall the dust cover.

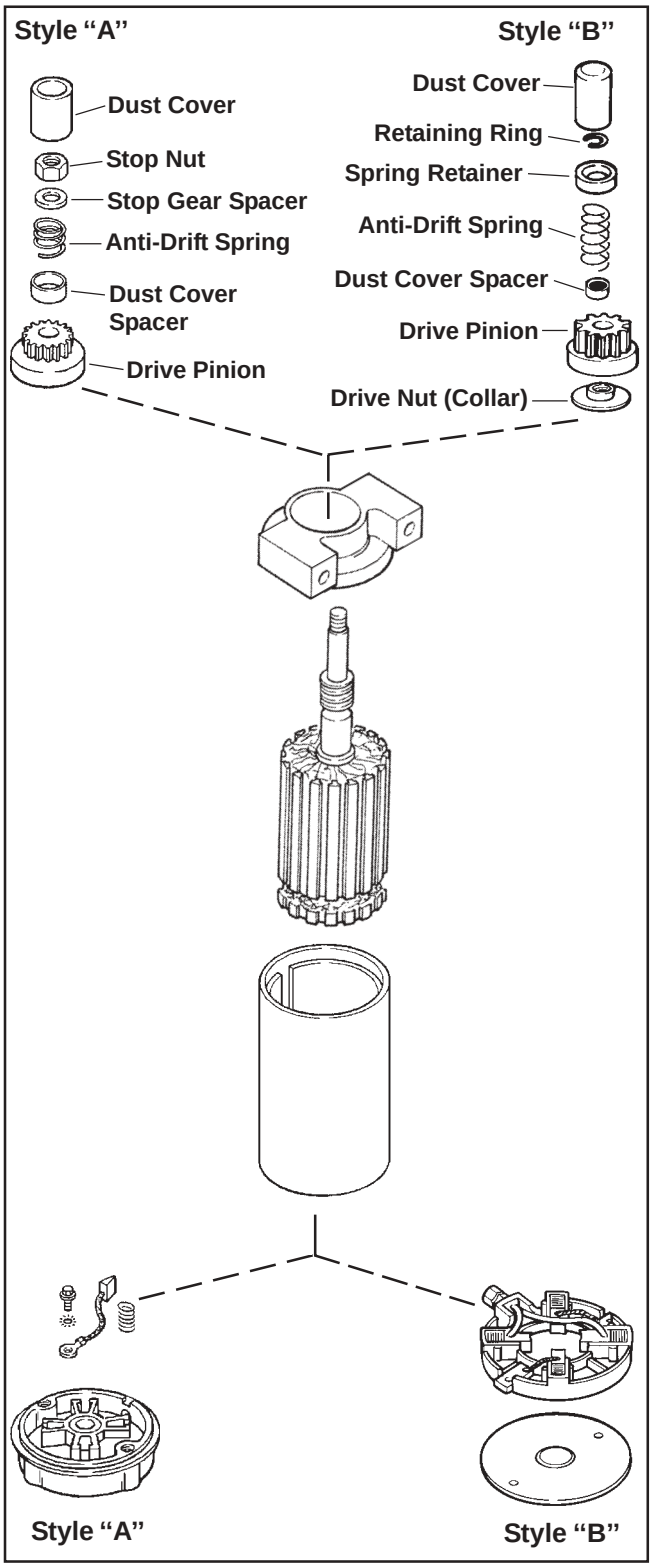

Figure 8-34. Inertia Drive Electric Starter.

Style "B" Drive Service

1. The rubber dust cover has a molded lip on the inside that snaps into a groove in the dust cover spacer (see Figure 8-35). Turn the drive pinion clockwise until it reaches the fully extended position. While holding it in the extended position, grasp the tip of the dust cover with a pliers or vise grip and pull it free from the spacer.

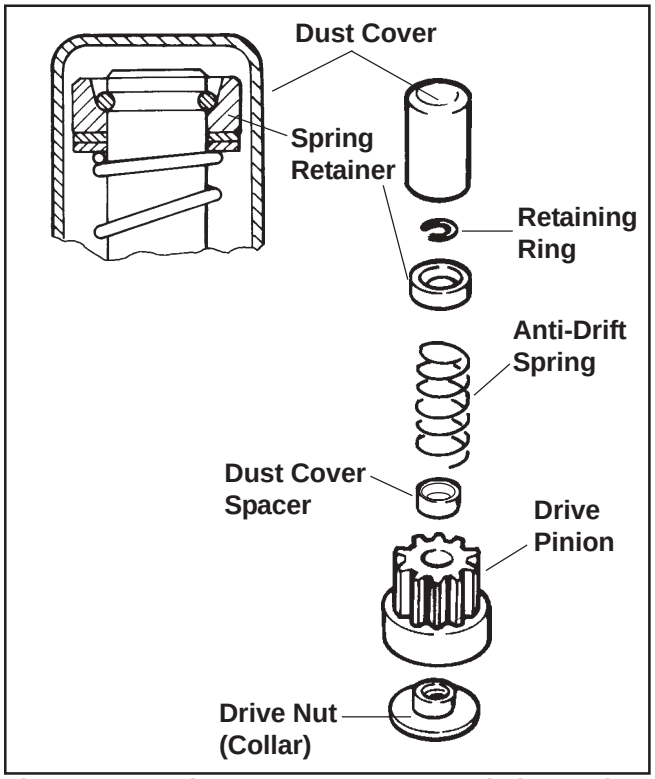

Figure 8-35. Drive Components, "Bonded" Inertia Drive Starter.

2. Disassemble the snap ring removal tool, (see Section 2).

3. Again referring to Figure 8-35, grasp the spring retainer and push it toward the starter, compressing the anti-drift spring and exposing the retaining ring.

4. Holding the spring retainer in the retracted position, assemble the inner halves of the removal tool around the armature shaft with the retaining ring in the inner groove (see Figure 8-36). Slide the collar over the inner halves to hold them in position.

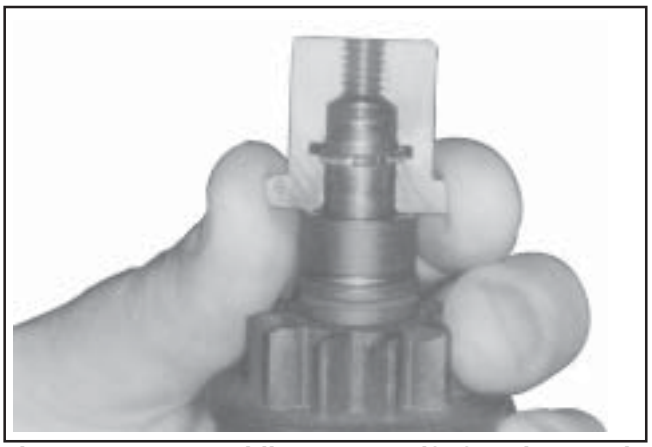

Figure 8-36. Assembling Inner Half of Tool Around Armature Shaft and Retaining Ring.

5. Thread the center screw into the removal tool until you feel resistance. Use a wrench (1-1/8" or adjustable) to hold the base of the removal tool. Use another wrench or socket (1/2" or 13 mm) to turn the center screw clockwise (see Figure 8-37). The resistance against the center screw will tell you when the retaining ring has popped out of the groove in the armature shaft.

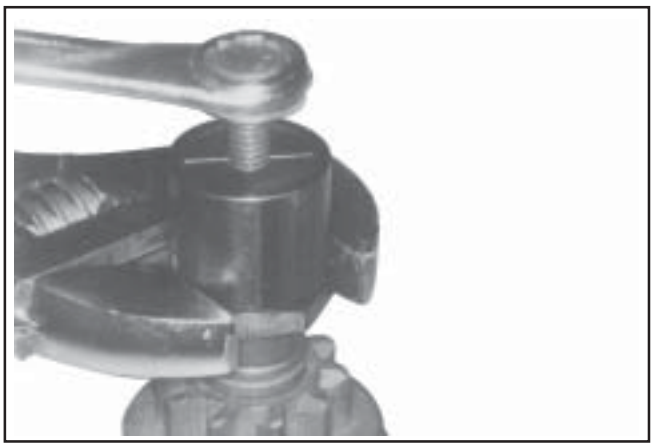

Figure 8-37. Holding Tool and Turning Center Screw (Clockwise) to Remove Retaining Ring.

6. Remove the drive components from the armature shaft, paying attention to the sequence. If the splines are dirty, clean them with solvent.

7. The splines should have a light film of lubricant. Relubricate as necessary with Kohler bendix starter lubricant (see Section 2). Reinstall or replace the drive components, assembling them in the reverse order they were removed.

Retaining Ring Installation

1. Position the retaining ring in the groove in one of the inner halves. Assemble the other half over the top and slide on the outer collar.

2. Be certain the drive components are installed in correct sequence onto the armature shaft.

3. Slip the tool over the end of the armature shaft, so the retaining ring inside is resting on the end of the shaft. Hold the tool with one hand, exerting slight pressure toward the starter. Tap the top of the tool with a hammer until you feel the retaining ring snap into the groove. Disassemble and remove the tool.

4. Squeeze the retaining ring with a pliers to compress it into the groove.

5. Assemble the inner halves with the larger cavity around the spring retainer. See Figure 8-38. Slide the collar over them and thread the center screw in until resistance is felt.

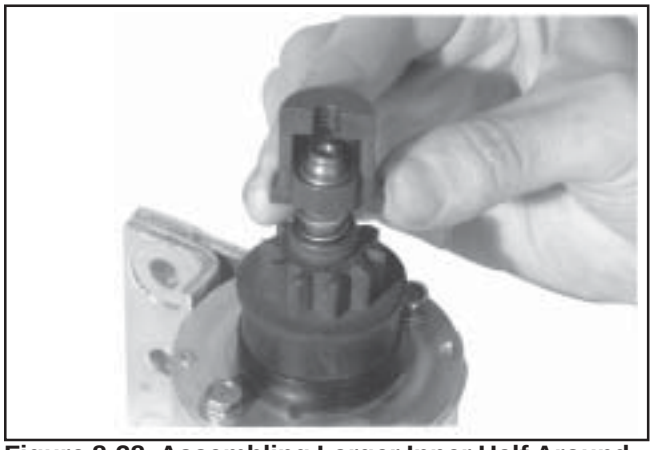

Figure 8-38. Assembling Larger Inner Half Around Spring Retainer.

6. Hold the base of the tool with a 1-1/8" wrench and turn the center screw clockwise with a 1/2" or 13 mm wrench to draw the spring retainer up around the retaining ring. Stop turning when resistance increases. Disassemble and remove tool.

7. Reinstall the dust cover.

Starter Disassembly

1. Remove the drive components following the instructions for servicing the drive.

2. Locate the small raised line on the edge of the drive end cap. On starters with Style ''A'' commutator end caps, it will be aligned with a premarked line on the starter frame. The frame is not premarked on starters with Style ''B'' end caps. Place a piece of masking tape on the frame and mark a line on the tape in line with the raised line on the end cap. See Figure 8-41.

3. Remove the thru bolts.

4. Remove the commutator end cap with brushes and brush springs (Style ''A''). Style ''B'' end caps remove as a separate piece with the brushes and carrier remaining in the frame.

5. Remove the drive end cap.

6. Remove the armature and thrust washer (if so equipped) from inside the starter frame.

7. Remove the brush/carrier assembly from the frame (Style ''B'' starters).

Style "A" End Cap Brush Replacement

1. Remove the brush springs from the pockets in the brush holder. See Figure 8-39.

2. Remove the self-tapping screws, negative (-) brushes, and plastic brush holder.

3. Remove the hex flange nut and fiber washer from the stud terminal.

   Remove the stud terminal with the positive (+) brushes and plastic insulating bushing from the end cap.

4. Install the insulating bushing on the stud terminal, of the new positive (+) brushes. Install the stud terminal into the commutator end cap. Secure the stud with the fiber washer and hex flange screw.

5. Install the brush holder, new negative (-) brushes, and self-tapping screws.

6. Install the brush springs and brushes into the pockets in brush holder. Make sure the chamfered sides of the brushes are away from the brush springs.

NOTE: Use a brush holder tool to keep the brushes in the pockets. A brush holder tool can easily be made from thin sheet metal. See Figure 8-40.

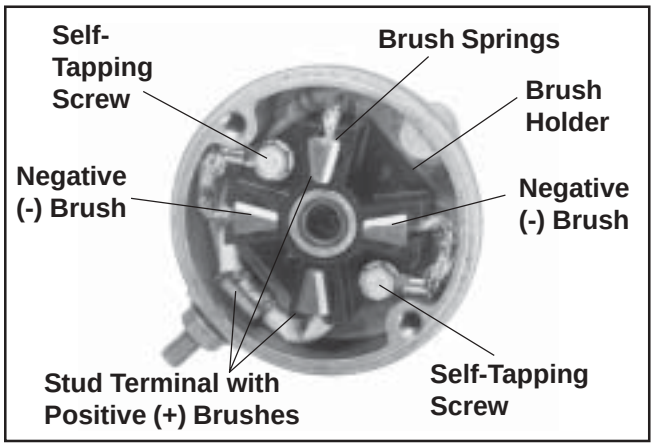

Figure 8-39. Style "A" Commutator End Cap with Brushes.

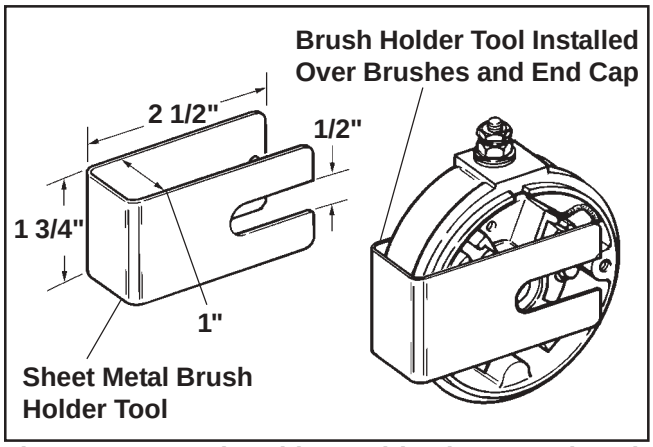

Figure 8-40. Brush Holder Tool (Style "A" End Cap).

Style "B" End Cap Brush Replacement

Starters with Style "B" end caps have the brushes in a plastic carrier housing, separate from the end cap. Replacement brushes come preassembled in the carrier housing, retained with two carton staples.

Commutator Service

Clean the commutator with a coarse, lint free cloth. Do not use emery cloth.

If the commutator is badly worn or grooved, turn it down on a lathe or replace the armature.

Starter Reassembly

1. Place the thrust washer (if so equipped) over the drive shaft of the armature.
2. Insert the armature into the starter frame. Make sure the magnets are closer to the drive shaft end of armature. The magnets will hold the armature inside the frame.
3. Install the drive end cap over the drive shaft. Make sure the match marks on the end cap and starter frame are aligned. See Figure 8-41.

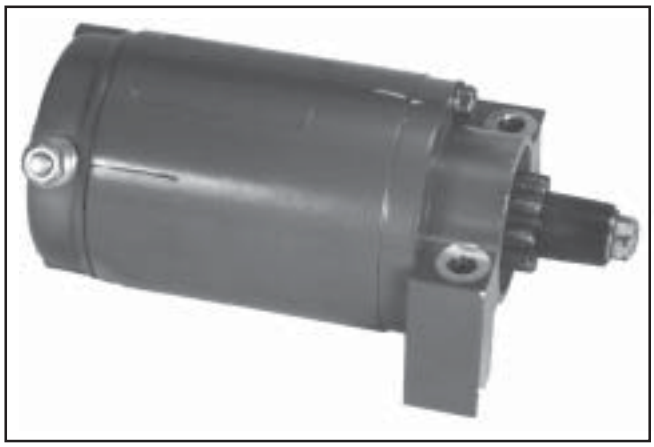

Figure 8-41. Starter Assembly Match Marks.

For Style "A" Commutator End Caps:

4. Install the brush holder tool to keep the brushes in the pockets of the commutator end cap.
5. Align the match marks on the commutator end cap and the starter frame. Hold the drive end and the commutator end caps firmly to the starter frame. Remove the brush holder tool.

For Style "B" Commutator End Caps:

4. If the brush assembly is not being replaced, position the brushes in their pockets in the carrier. Move them to the retracted position, and install carton staples to retain them. See Figure 8-42.
5. Align the terminal stud block with the notch in the starter frame and slide the brush/carrier assembly into the frame. The commutator will push the carton staples out as the brush assembly is installed. Position the end cap over the brush assembly, so the holes for the thru bolts are aligned with those in the brush carrier.

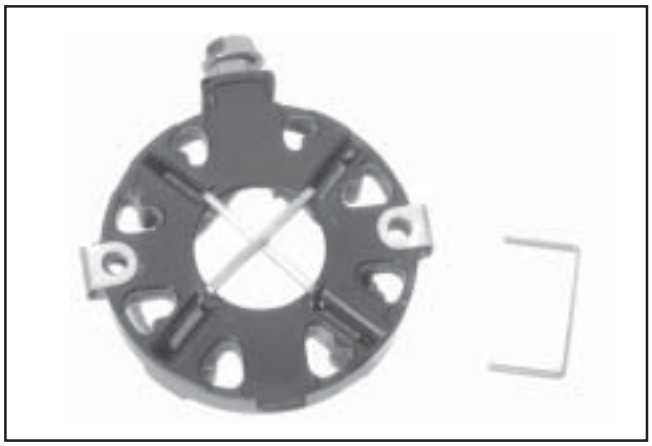

Figure 8-42. Style "B" Commutator End Cap with Brushes.

6. Install the thru bolts and tighten securely.

7. Lubricate the drive shaft with Kohler bendix starter drive lubricant (see Section 2). Install the drive components following the instructions for servicing the starter drive.

Solenoid Shift Electric Starters

The following subsection covers the solenoid shift electric starters. Much of the information in the proceeding subsection relates to this type starter also, so it is not repeated here. A Nippondenso or Delco-Remy solenoid shift starter may be used. The Nippondenso starter is covered first, and the Delco-Remy starter servicing follows.

Operation – Solenoid Shift Starter

When power is applied to the starter the electric solenoid moves the drive pinion out onto the drive shaft and into mesh with the flywheel ring gear. When the pinion reaches the end of the drive shaft it rotates the flywheel and cranks the engine.

When the engine starts and the start switch is released the starter solenoid is deactivated, the drive lever moves back, and the drive pinion moves out of mesh with the ring gear into the retracted position.

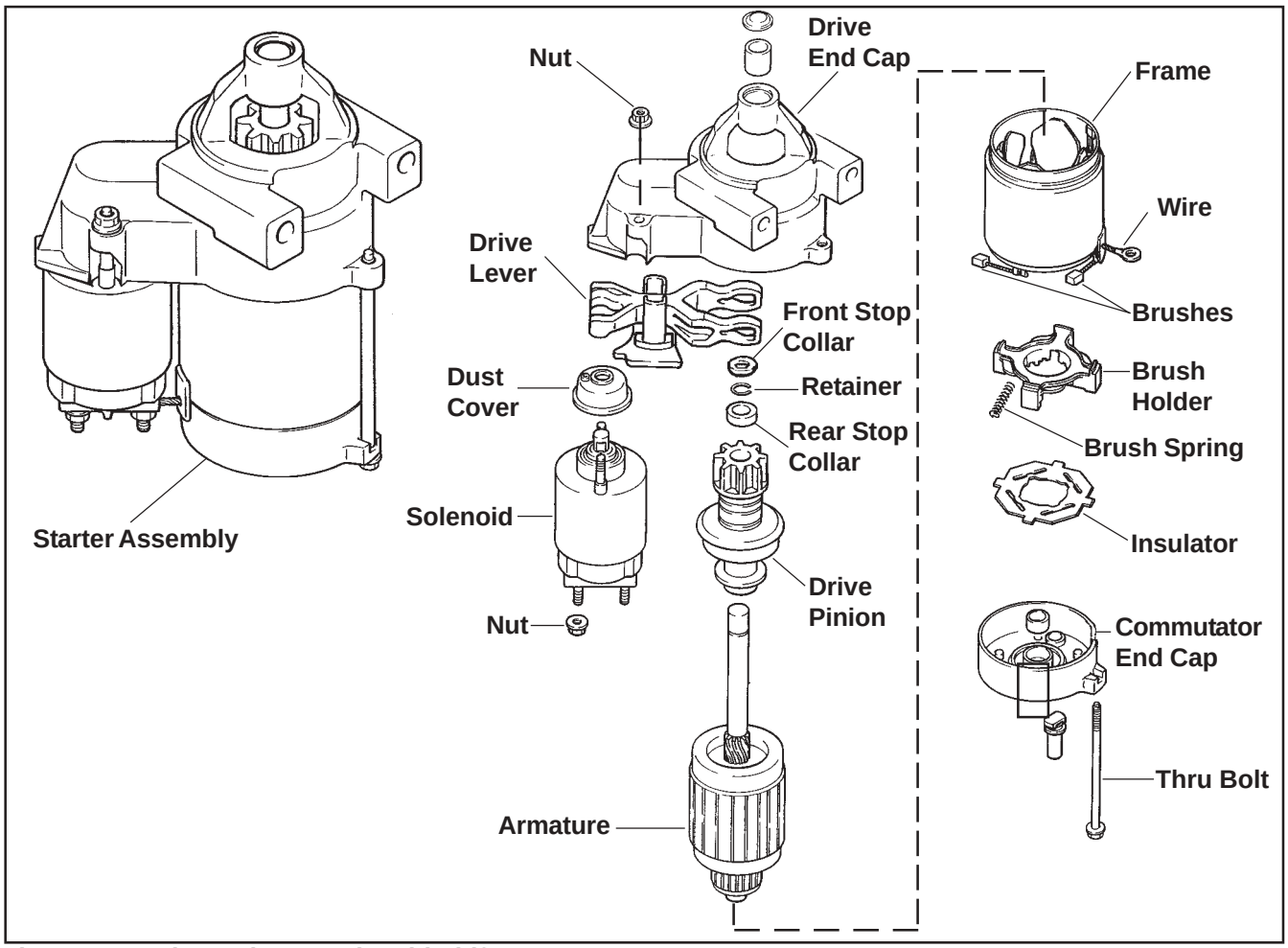

Figure 8-43. Nippondenso Solenoid Shift Starter.

Starter Disassembly

1. Disconnect the lead wire from the solenoid.

2. Remove the hex nuts securing the solenoid, and remove the solenoid from the starter assembly.

3. Remove the two thru bolts.

4. Remove the commutator end cap.

5. Remove the insulator and the brush springs from the brush spring holder.

6. Remove the armature from the frame.

7. Remove the drive lever and the armature from the drive end cap.

   NOTE: When removing the lever and the armature be careful not to lose the thrust washer.

8. The stop collar consists of two similar pieces held in place by being snapped over a retainer. The retainer is held in place by a groove in the armature shaft. To remove the stop collar the two pieces must be pried off the retainer.

9. When the stop collars are removed the retainer can be removed from the armature shaft. Do not reuse the retainer.

Brush Replacement

The brushes in the starter are part of the starter frame. Brush kit, Kohler Part No. **52 221 01-S**, contains four replacement brushes and springs. If replacement is necessary, all four brushes should be replaced.

1. Remove the brushes from the brush holder, and remove the brush holder from the frame.

2. Cut the brush lead wire at the edge of the post with a pair of nippers.

3. File off any burrs on the post.

4. The replacement brushes have a solid portion on them which should be crimped on the post.

5. Solder the crimped portion to the post.

6. Replace the brush holder in the frame and place the brushes in the brush holder. Reinstall the springs.

Starter Service

Every **500 hours** of operation (or annually, whichever comes first), solenoid shift starters must be disassembled, cleaned and relubricated. Apply starter lubricant (see Section 2) to the lever and shaft. Failure to do so could result in an accumulation of dirt or debris that might prevent the engine from starting and could cause damage to the starter or the flywheel. Service may be necessary more frequently under dusty or dirty conditions.

Starter Reassembly

1. Insert the rear stop collar on the armature shaft.

2. Place the retainer in the groove on the armature shaft.

   NOTE: Always use a new retainer. Tighten the retainer in the groove to secure.

3. Fit the front stop collar over the shaft and bring the front and the rear stop collars together over the retainer. Using two pairs of pliers apply even force to the two collars until they snap over the retainer and nest into one another.

4. Reassemble the remaining components of the starter in reverse order from disassembly.

Delco-Remy Starters

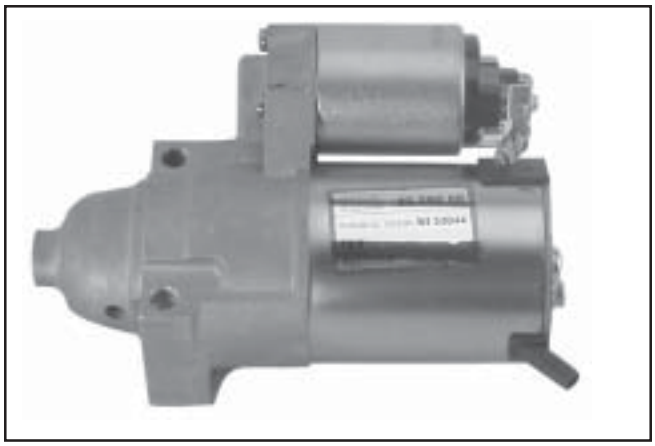

Figure 8-44. Completed Delco-Remy Starter.

Starter Disassembly

1. Remove the hex nut and disconnect the positive (+) brush lead/bracket from the solenoid terminal.

2. Remove the three screws securing the solenoid to the starter. See Figure 8-45.

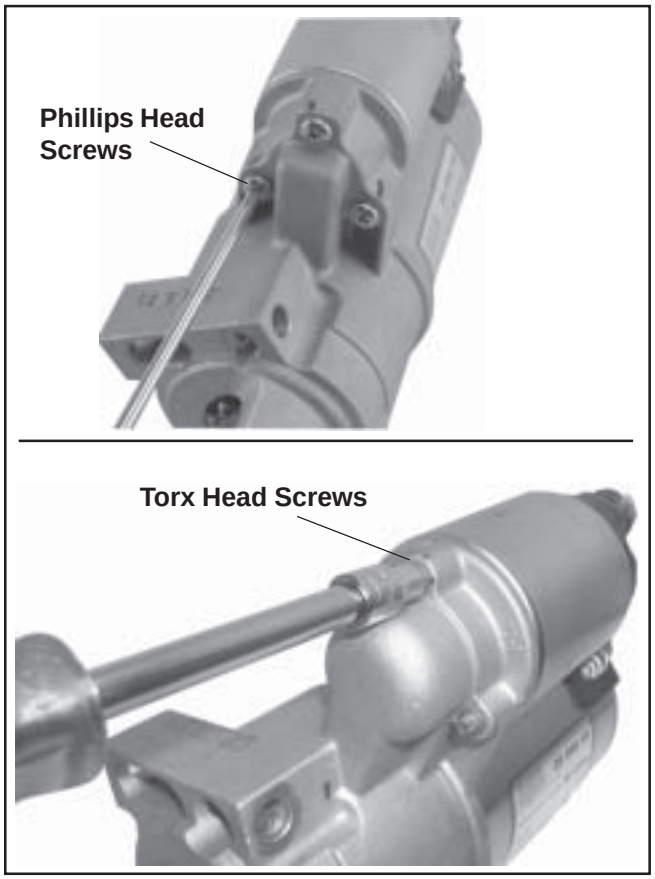

Figure 8-45. Removing Solenoid Screws.

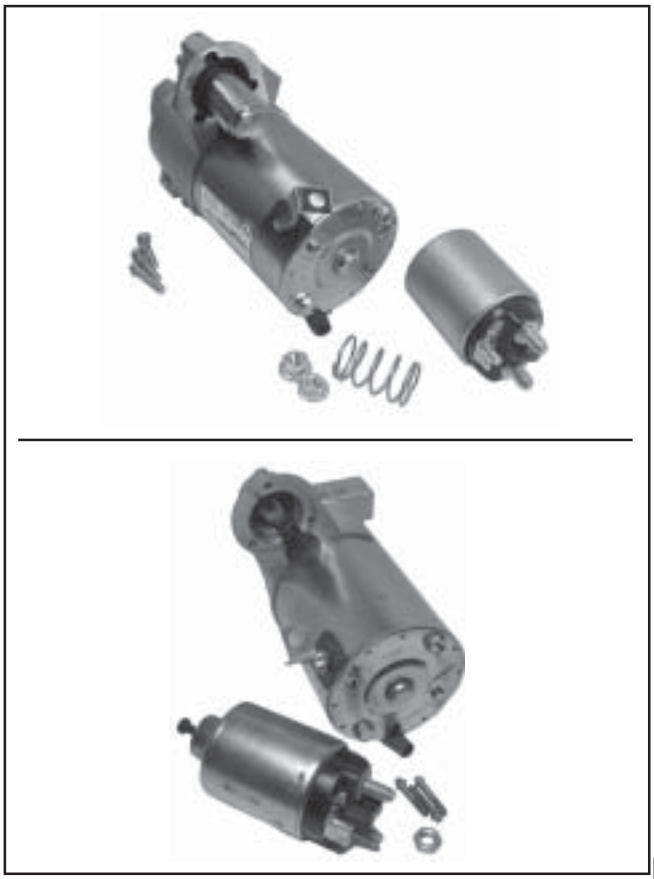

Figure 8-46. Solenoid Removed from Starter.

3. If the solenoid was mounted with Phillips head screws, separate the solenoid and plunger spring from the drive end cap. If the solenoid was mounted with external Torx head screws, the plunger is part of the solenoid, unhook the plunger pin from the drive lever. Remove the gasket from the recess in the housing. See Figures 8-46 and 8-47.

NOTE: Test procedure for checking starter solenoid on pages 8.39 and 8.40.

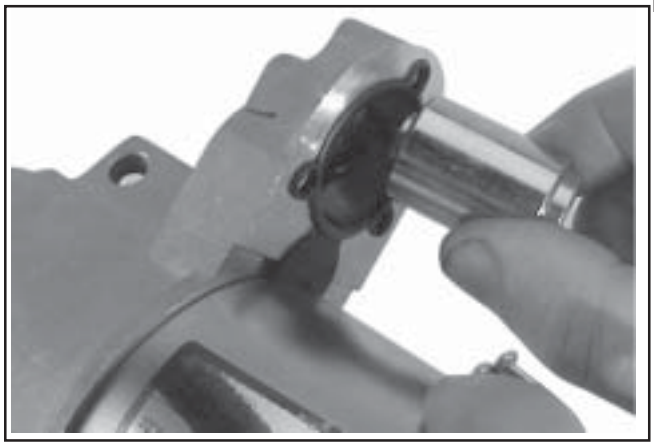

Figure 8-47. Removing Plunger.

4. Remove the two thru (larger) bolts. See Figure 8-48.

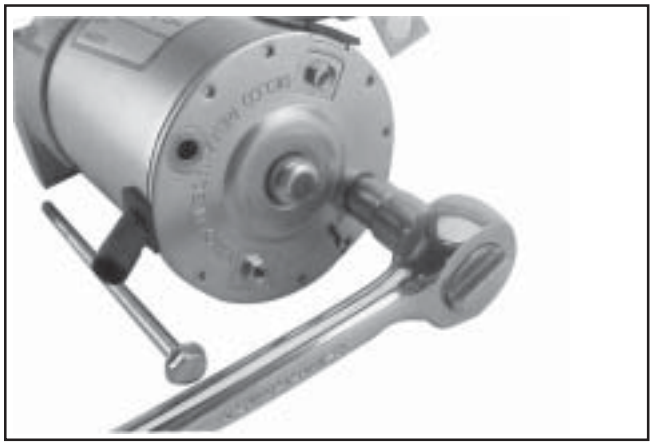

Figure 8-48. Removing Thru Bolts.

5. Remove the commutator end plate assembly, containing the brush holder, brushes, springs, and locking caps. Remove the thrust washer from inside the commutator end. See Figure 8-49.

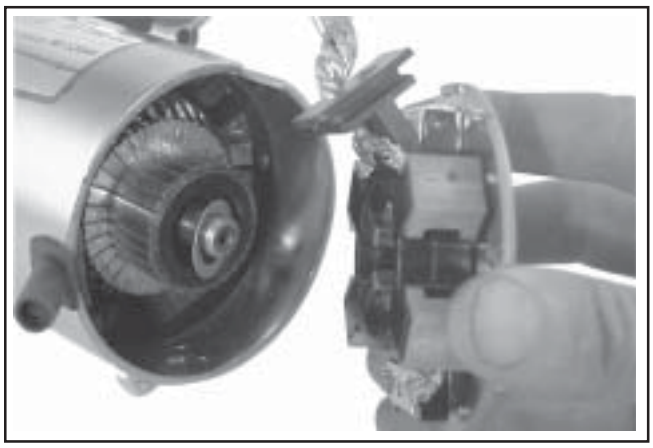

Figure 8-49. Removing Commutator End Plate Assembly.

6. Remove the frame from the armature and drive end cap. See Figure 8-50.

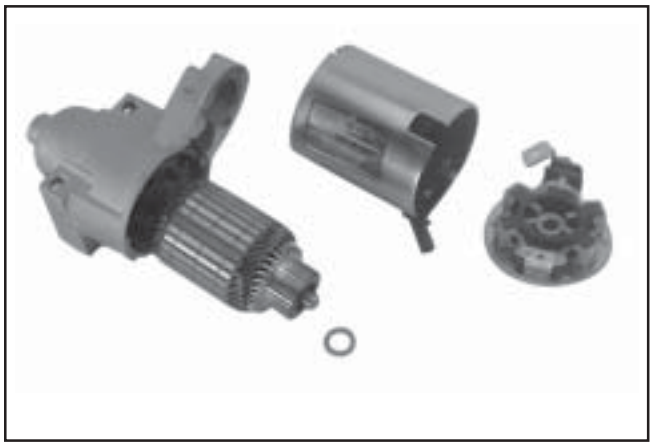

Figure 8-50. Starter Frame Removed.

7. Remove the drive lever pivot bushing and backing plate from the end cap. See Figure 8-51.

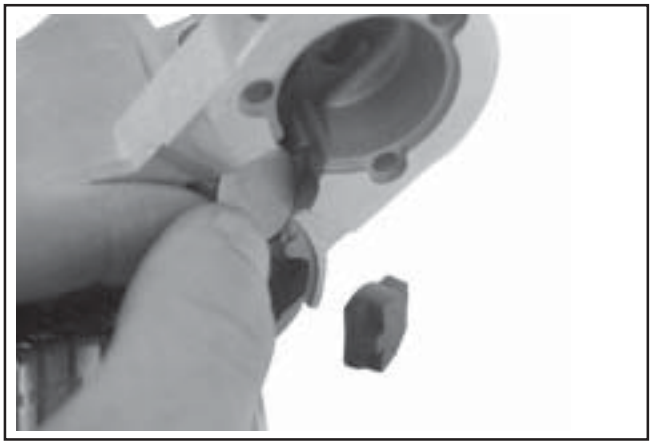

Figure 8-51.

8. Take out the drive lever and pull the armature out of the drive end cap. See Figure 8-52.

9. Remove the thrust washer from the armature shaft. See Figure 8-52.

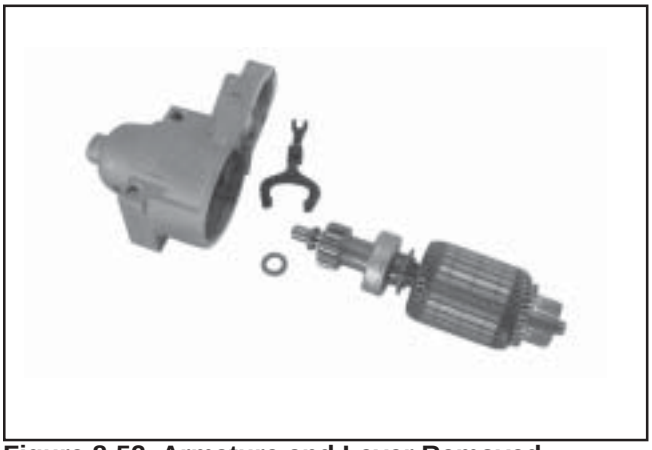

Figure 8-52. Armature and Lever Removed.

10. Push the stop collar down to expose the retaining ring. See Figure 8-53.

Figure 8-53. Retaining Ring Detail.

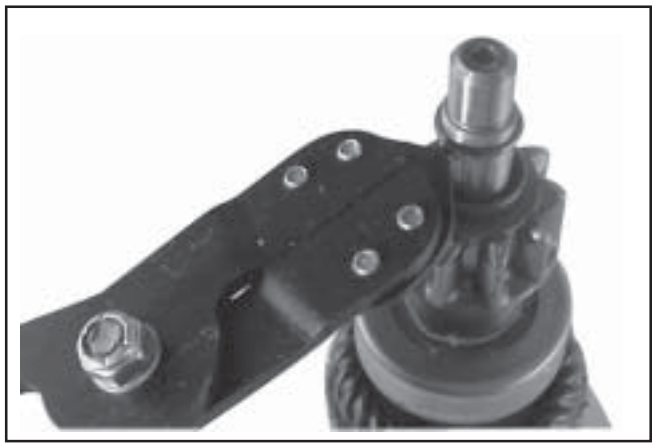

Figure 8-54. Removing Retaining Ring.

11. Remove the retainer from the armature shaft. Save the stop collar.

NOTE: Do not reuse the old retainer.

12. Remove the drive pinion assembly from the armature.

13. Clean the parts as required.

NOTE: **Do not** soak the armature or use solvent when cleaning. Wipe clean using a soft cloth, or use compressed air.

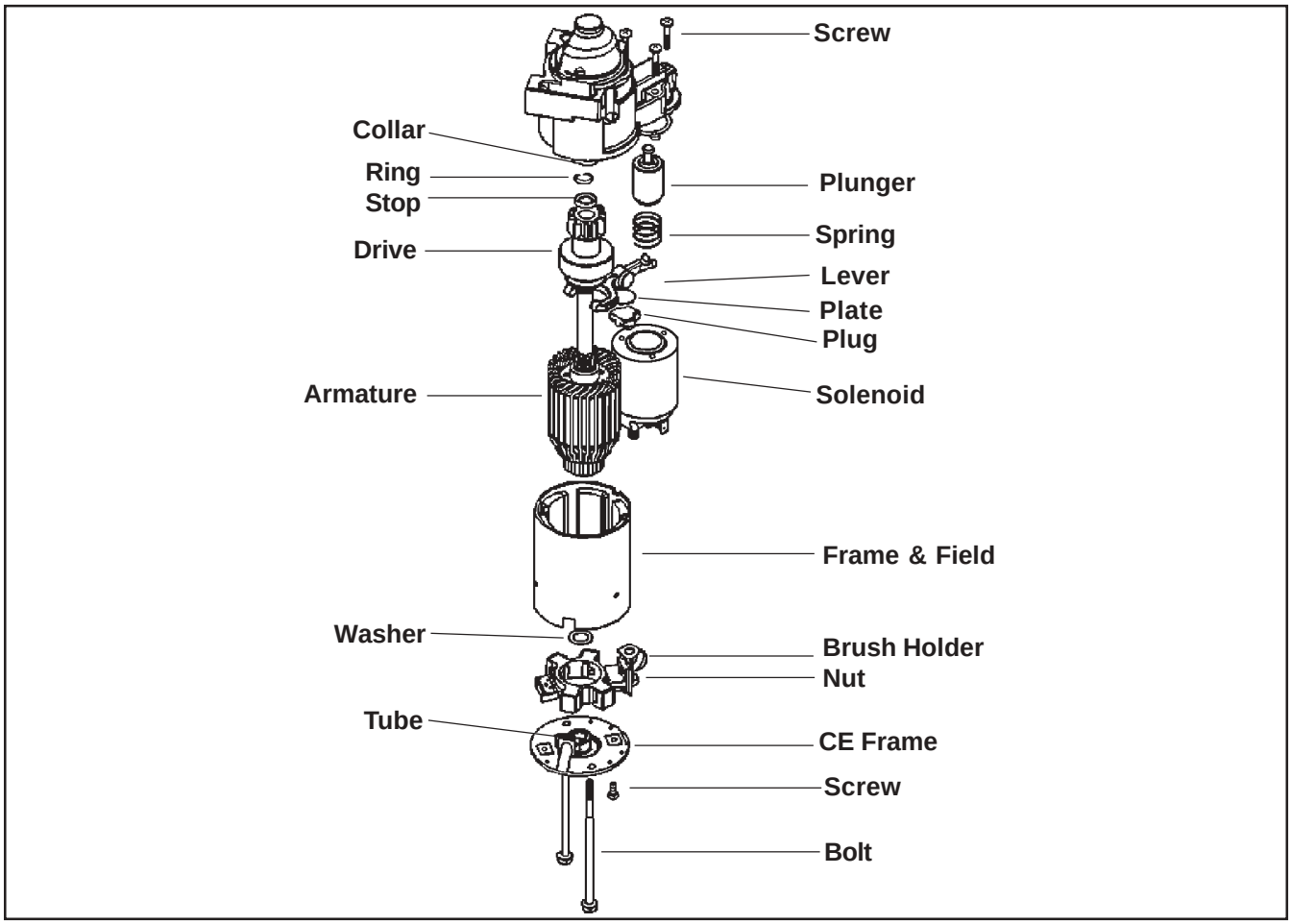

Figure 8-55. Delco-Remy Starter.

Inspection

Drive Pinion

Check and inspect the following areas:

a. The pinion teeth for abnormal wear or damage.

b. The surface between the pinion and the clutch mechanism for nicks, or irregularities which could cause seal damage.

c. Check the drive clutch by holding the clutch housing and rotating the pinion. The pinion should rotate in one direction only.

Brushes and Springs

Inspect both the springs and brushes for wear, fatigue, or damage. Measure the length of each brush. The minimum length for each brush is **7.6 mm (0.300 in.)**. See Figure 8-56. Replace the brushes if they are worn undersize, or their condition is questionable.

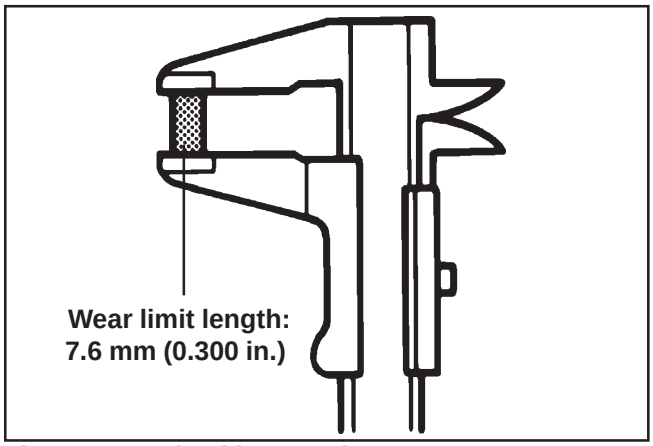

Figure 8-56. Checking Brushes.

Armature

1. Clean and inspect the commutator (outer surface). The mica insulation must be lower than the commutator bars (undercut) to ensure proper operation of the commutator. See Figure 8-57.

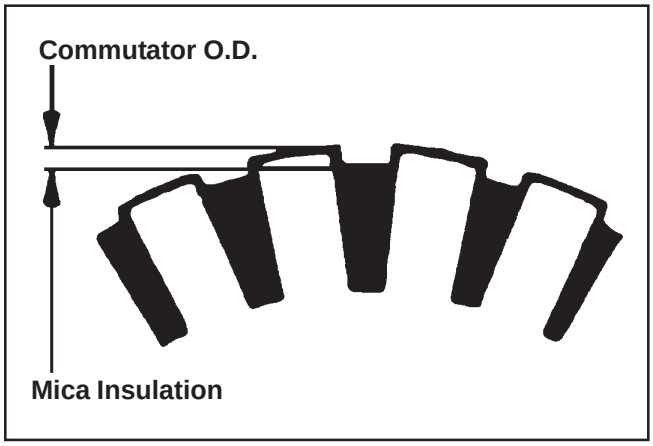

Figure 8-57. Commutator Mica Inspection.

2. Use an ohmmeter set to the Rx1 scale. Touch the probes between two different segments of the commutator, and check for continuity. See Figure 8-58. Test all the segments. Continuity must exist between all or the armature is bad.

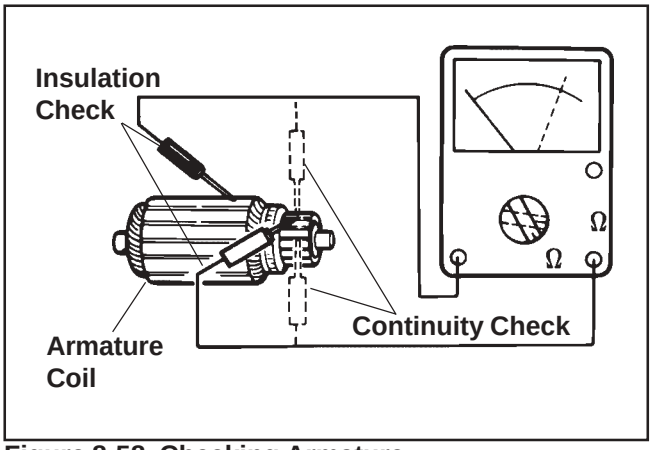

Figure 8-58. Checking Armature.

3. Check for continuity between the armature coil segments and the commutator segments. See Figure 8-58. There should be no continuity. If continuity exists between any two, the armature is bad.

4. Check the armature windings/insulation for shorting.

Shift Fork

Check that the shift fork is complete, and the pivot and contact areas are not excessively worn, cracked or broken.

Brush Replacement

The brushes and springs are serviced as a set (4). Use Brush and Spring Kit, Kohler Part No. **25 221 01-S**, if replacement is necessary.

1. Perform steps 1-5 in "Starter Disassembly."

2. Remove the two screws securing the brush holder assembly to the end cap (plate). Note the orientation for reassembly later. See Figure 8-59. Discard the old brush holder assembly.

Figure 8-59. Removing Brush Holder.

3. Clean the component parts as required.

4. The new brushes and springs come preassembled in a brush holder with a protective sleeve that will also serve as an installation tool. See Figure 8-60.

Figure 8-60. Service Brush Kit.

5. Perform Steps 10-13 in the "Starter Reassembly" sequence. Installation must be done after the armature, drive lever, and frame are installed, if the starter has been disassembled.

Starter Service

Clean the drive lever and armature shaft. Apply Kohler electric starter drive lubricant (see Section 2) (Versilube G322L or Mobil Temp SHC 32) to the lever and shaft. Clean and check the other starter parts for wear or damage as required.

Starter Reassembly

1. Apply drive lubricant (see Section 2) to the armature shaft splines. Install the drive pinion onto the armature shaft.

2. Install and assemble the stop collar/retainer assembly.

   a. Install the stop collar down onto the armature shaft with the counter bore (recess) up.

   b. Install a new retainer in the larger (rear) groove of the armature shaft. Squeeze with a pliers to compress it in the groove.

   c. Slide the stop collar up and lock it into place, so the recess surrounds the retainer in the groove. If necessary, rotate the pinion outward on the armature splines against the retainer to help seat the collar around the retainer.

Figure 8-61. Installing Stop Collar and Retainer.

NOTE: Always use a new retainer. Do not reuse old retainers which have been removed.

3. Install the offset thrust (stop) washer so the smaller "offset" of the washer faces the retainer/collar. See Figure 8-62.

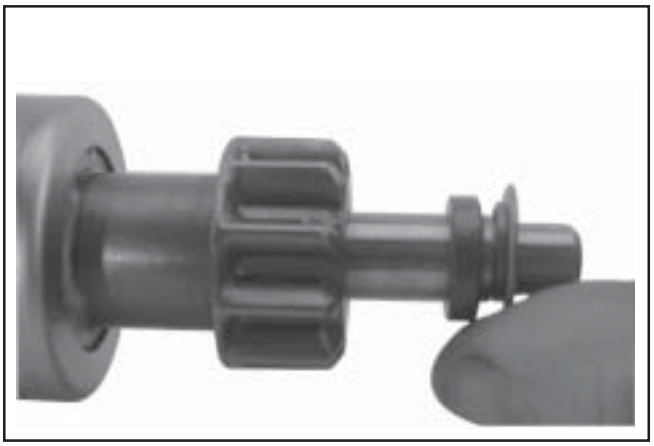

Figure 8-62. Installing Thrust Washer.

4. Apply a small amount of oil to the bearing in the drive end cap, and install the armature with the drive pinion.

5. Lubricate the fork end and center pivot of the drive lever with drive lubricant (see Section 2). Position the fork end into the space between the captured washer and the rear of the pinion.

6. Slide the armature into the drive end cap, and at the same time seat the drive lever into the housing.

NOTE: Correctly installed, the center pivot section of the drive lever will be flush or below the machined surface of the housing which receives the backup washer. See Figure 8-63.

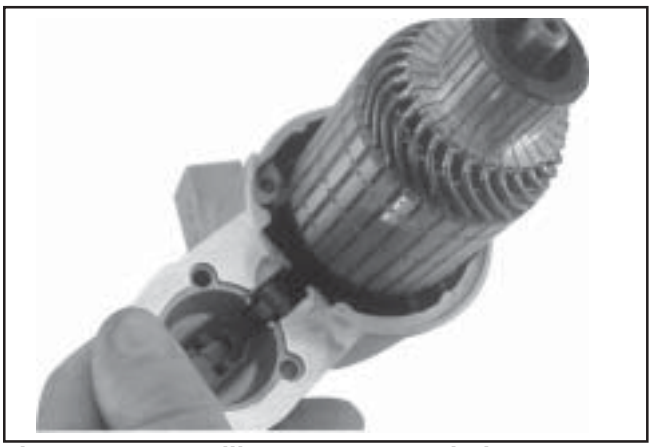

Figure 8-63. Installing Armature and Pivot Lever.

7. Install the backup washer, followed by the rubber grommet, into the matching recess of the drive end cap. The molded recesses in the grommet should be "out", matching and aligned with those in the end cap. See Figure 8-64.

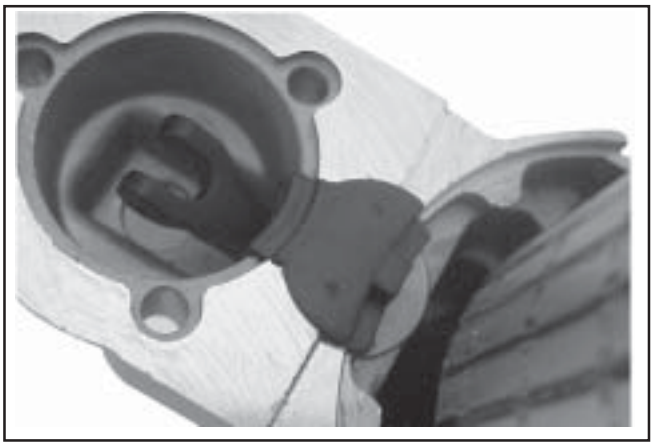

Figure 8-64. Installing Backup Washer and Grommet.

8. Install the frame, with the small notch forward, onto the armature and drive end cap. Align the notch with the corresponding section in the rubber grommet. Install the drain tube in the rear cutout, if it was removed previously. See Figure 8-65.

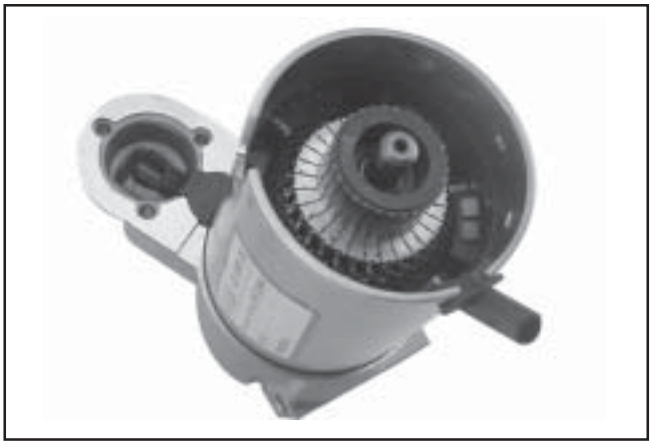

Figure 8-65. Installing Frame and Drain Tube.

9. Install the flat thrust washer onto the commutator end of the armature shaft. See Figure 8-66.

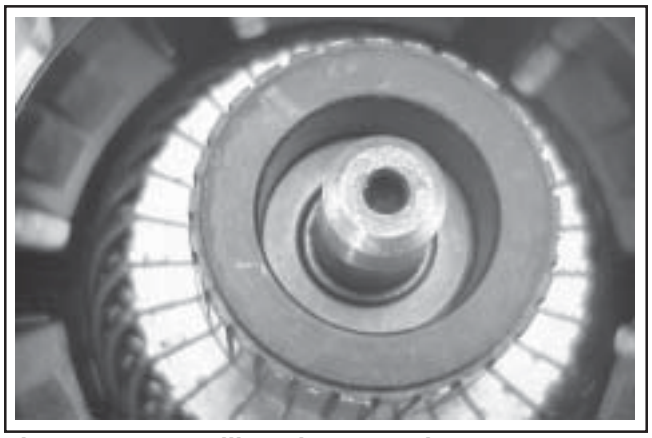

Figure 8-66. Installing Thrust Washer.

10. Starter reassembly when **replacing** the Brushes/ Brush Holder Assembly:

    a. Hold the starter assembly vertically on the end housing, and carefully position the assembled brush holder assembly, with the supplied protective tube, against the end of the commutator/armature. The mounting screw holes in the metal clips must be "up/ out." Slide the brush holder assembly down into place around the commutator, and install the positive (+) brush lead grommet in the cutout of the frame. See Figure 8-67. The protective tube may be saved and used for future servicing.

Figure 8-67. Installing Brush Holder Assembly with Supplied Tube.

Starter reassembly when **not replacing** the Brushes/ Brush Holder Assembly:

a. Carefully unhook the retaining caps from over each of the brush assemblies. Do not lose the springs.

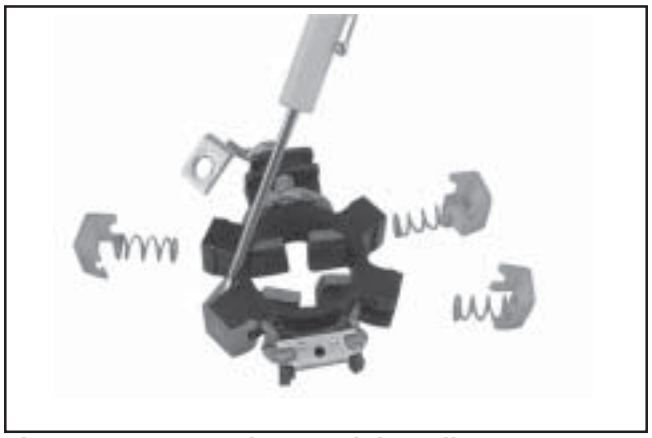

Figure 8-68. Removing Retaining Clips.

b. Position each of the brushes back in their slots so they are flush with the I.D. of the brush holder assembly. Insert the Brush Installation Tool (with extension), or use the tube described above from a prior brush installation, through the brush holder assembly, so the holes in the metal mounting clips are "up/out."

c. Install the brush springs and snap on the four retainer caps. See Figure 8-69.

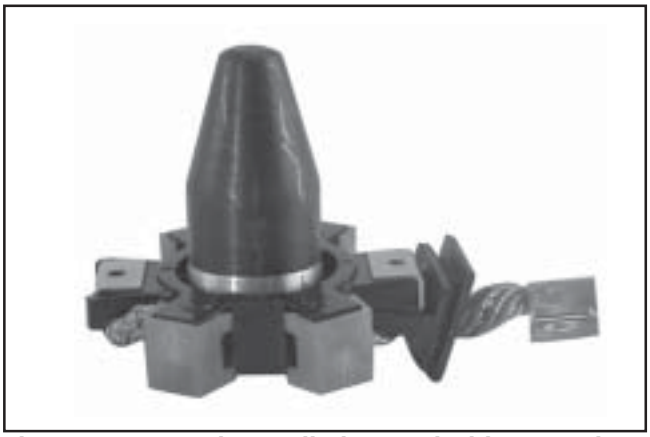

Figure 8-69. Brush Installation Tool with Extension.

d. Hold the starter assembly vertically on the end housing, and carefully place the tool (with extension) and assembled original brush holder assembly onto the end of the armature shaft. Slide the brush holder assembly down into place around the commutator, install the positive (+) brush lead grommet in the cutout of the frame. See Figure 8-70.

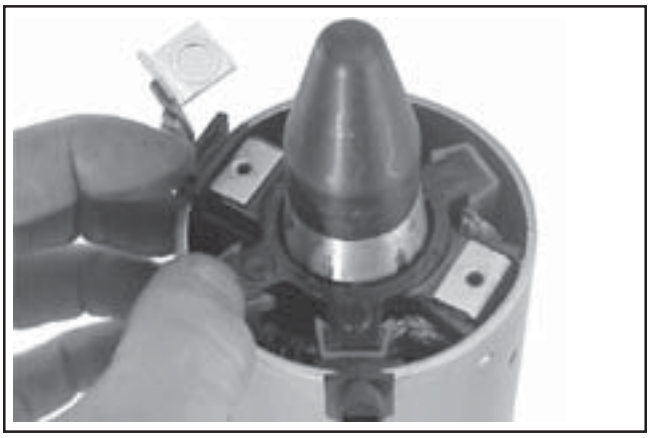

Figure 8-70. Installing Brush Holder Assembly using Tool with Extension.

11. Install the end cap onto the armature and frame, aligning the thin raised rib in the end cap with the corresponding slot in the grommet of the positive (+) brush lead.

12. Install the two thru bolts, and the two brush holder mounting screws. Torque the thru bolts to **5.6-9.0 N·m (49-79 in. lb.)**. Torque the brush holder mounting screws to **2.5-3.3 N·m (22-29 in. lb.)**. See Figures 8-71 and 8-72.

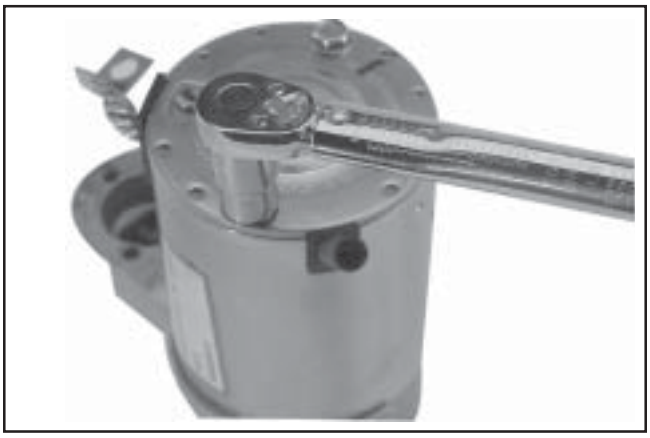

Figure 8-71. Torquing Thru Bolts.

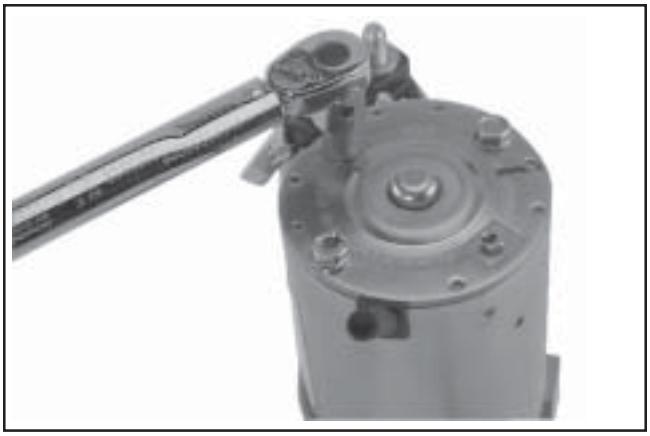

Figure 8-72. Torquing Brush Holder Screws.

13. Hook the plunger behind the upper end of the drive lever, and install the spring into the solenoid. Insert the three mounting screws through the holes in the drive end cap. Use these to hold the solenoid gasket in position, then mount the solenoid. Torque the screws to **4.0-6.0 N·m (35-53 in. lb.)**.

14. Connect the positive (+) brush lead/bracket to the solenoid and secure with the hex nut. Torque the nut to **8-11 N·m (71-97 in. lb.)**. Do not overtighten. See Figure 8-73.

Figure 8-73. Positive (+) Brush Lead Connection.

Solenoid Test Procedure

Solenoid Shift Style Starters
Disconnect all leads from the solenoid including the positive brush lead attached to the lower stud terminal. Remove the mounting hardware and separate the solenoid from the starter for testing.

Test 1. Solenoid Pull-In Coil/Plunger Actuation Test.
Use a 12 volt power supply and two test leads. Connect one lead to the flat spade "S/start" terminal on the solenoid. Momentarily* connect the other lead to the lower large post terminal. See Figure 8-74. When the connection is made the solenoid should energize (audible click), and the plunger retract. Repeat the test several times. If the solenoid fails to activate, it should be replaced.

*NOTE: DO NOT leave the 12 volt test leads connected to the solenoid for any time over what is necessary for performing each of the individual tests. Internal damage to the solenoid may otherwise occur.

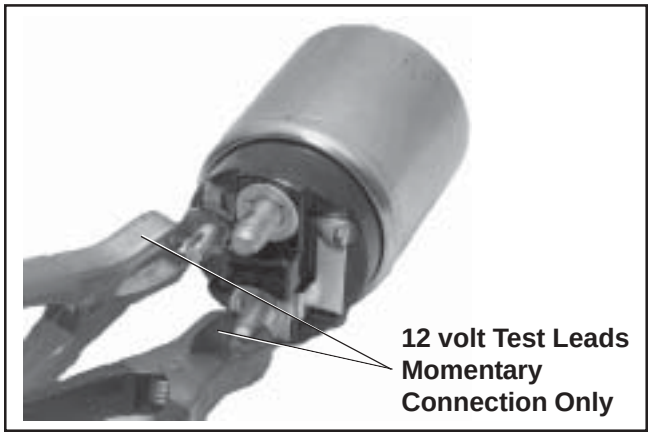

Figure 8-74. Testing Pull-In Coil/Plunger Actuation.

Test 2. Solenoid Pull-In Coil/Contact Continuity Test.
Use an ohmmeter set to the audible or Rx2K scale, and connect the two ohmmeter leads to the two large post terminals. Perform the preceding test (1) and check for continuity. See Figure 8-75. The ohmmeter should indicate continuity, if no continuity is indicated the solenoid should be replaced. Repeat test several times to confirm condition.

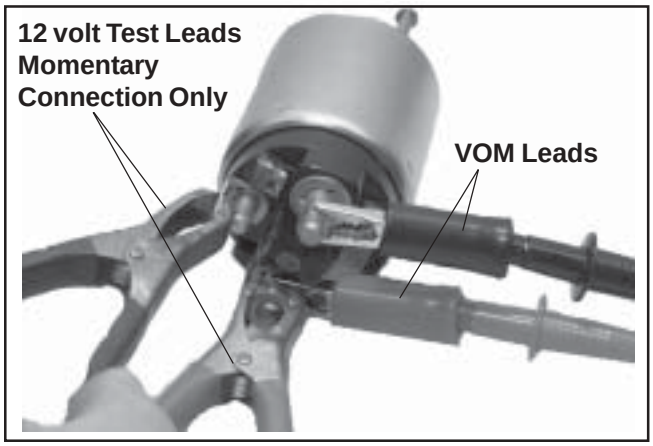

Figure 8-75. Testing Pull-In Coil/Solenoid Contact Continuity.

Test 3. Solenoid Hold-In Coil Function Test.
Connect one 12 volt test lead to the flat spade "S/start" terminal on the solenoid, and the other lead to the body or mounting surface of the solenoid. Then, manually push the plunger "In" and check if the "Hold-In" coil holds the plunger retracted. See Figure 8-76. Do not allow the test leads to remain connected to the solenoid for a prolonged period of time. If the plunger fails to stay retracted, the solenoid should be replaced.

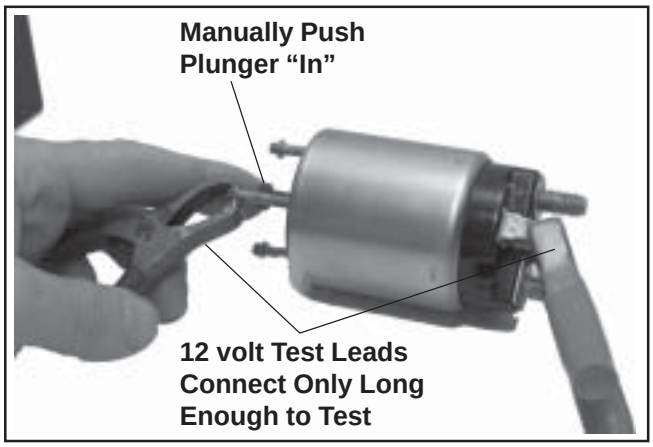

Figure 8-76. Testing Hold-In Coil/Function Test.

Test 4. Solenoid Hold-In Coil/Contact Continuity Test.

Use an ohmmeter set to the audible or Rx2K scale, and connect the two ohmmeter leads to the two large post terminals. Perform the preceding test (3) and check for continuity. See Figure 8-77. The meter should indicate continuity, if no continuity is indicated the solenoid should be replaced. Repeat test several times to confirm condition.

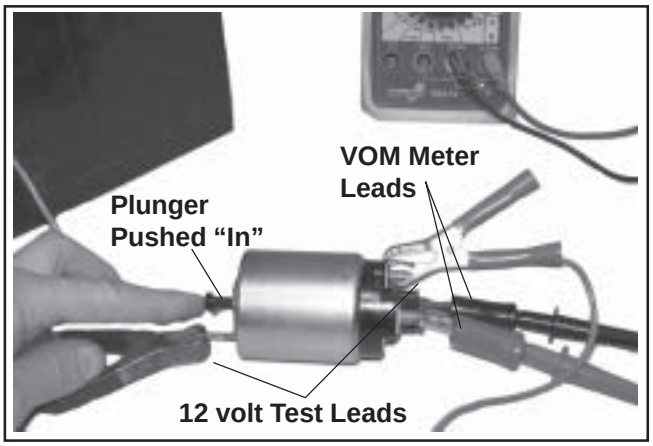

Figure 8-77. Testing Hold-In Coil/Solenoid Contact Continuity.

Section 9
Disassembly

WARNING: Accidental Starts!

Disabling engine. Accidental starting can cause severe injury or death. *Before working on the engine or equipment, disable the engine as follows: 1) Disconnect the spark plug lead(s). 2) Disconnect negative (-) battery cable from battery.*

General

Clean all parts thoroughly as the engine is disassembled. Only clean parts can be accurately inspected and gauged for wear or damage. There are many commercially available cleaners that will quickly remove grease, oil, and grime from engine parts. When such a cleaner is used, follow the manufacturer's instructions and safety precautions carefully.

Make sure all traces of the cleaner are removed before the engine is reassembled and placed into operation. Even small amounts of these cleaners can quickly break down the lubricating properties of engine oil.

Typical Disassembly Sequence

The following sequence is suggested for complete engine disassembly. The sequence can be varied to accommodate options or special equipment.

1. Disconnect spark plug leads.
2. Shut off fuel supply.
3. Drain oil from crankcase and remove oil filter.
4. Remove muffler.
5. Remove air cleaner assembly.
6. Remove fuel pump.
7. Remove control panel (if so equipped).
8. Remove throttle and choke controls.
9. Remove external governor controls.
10. Remove carburetor.
11. Remove Oil Sentry™ (if so equipped).
12. Remove electric starter motor.
13. Remove outer baffles and blower housing.
14. Remove inner baffles and breather cover.
15. Remove valve covers.
16. Remove ignition modules.
17. Remove intake manifold.
18. Remove spark plugs.
19. Remove cylinder heads and hydraulic lifters.
20. Remove grass screen and fan.
21. Remove flywheel.
22. Remove stator and backing plates.
23. Remove closure plate assembly.
24. Remove camshaft.
25. Remove connecting rods with pistons and rings.
26. Remove crankshaft.
27. Remove governor cross shaft.
28. Remove flywheel end oil seal.

Disconnect Spark Plug Leads

1. Disconnect the leads from the spark plugs. See Figure 9-1.

   NOTE: Pull on boot only, to prevent damage to spark plug lead.

Figure 9-1. Disconnect Both Spark Plug Leads.

Shut Off Fuel Supply

Drain Oil from Crankcase and Remove Oil Filter

1. Remove the oil fill cap, dipstick, and one of the oil drain plugs.

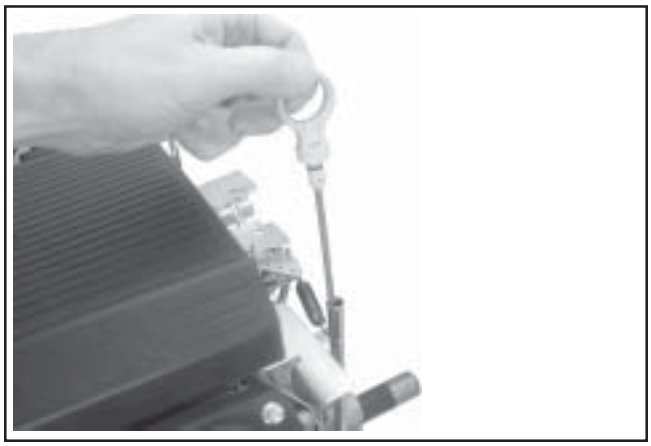

Figure 9-2. Removing Dipstick from Tube.

Figure 9-3. Removing Oil Fill Cap from Cover.

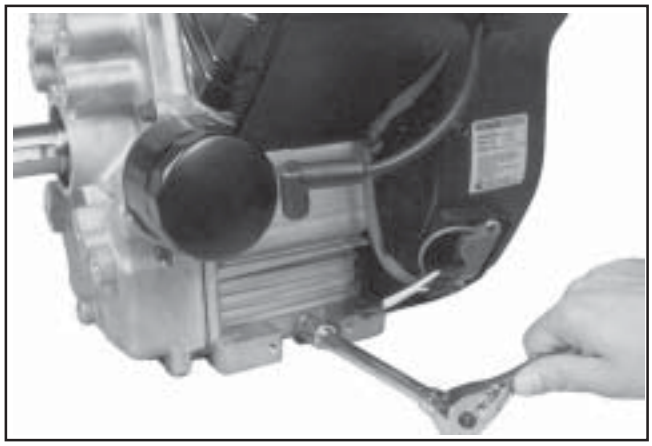

Figure 9-4. Removing Oil Drain Plug.

2. Allow ample time for the oil to drain from the crankcase and oil filter.

3. Remove and discard the oil filter. See Figure 9-5.

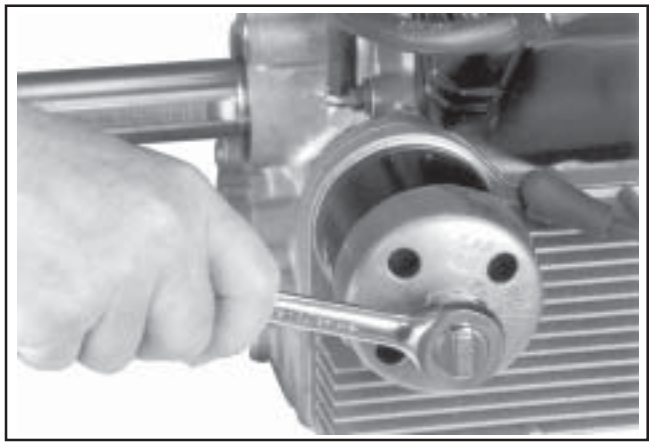

Figure 9-5. Removing Oil Filter.

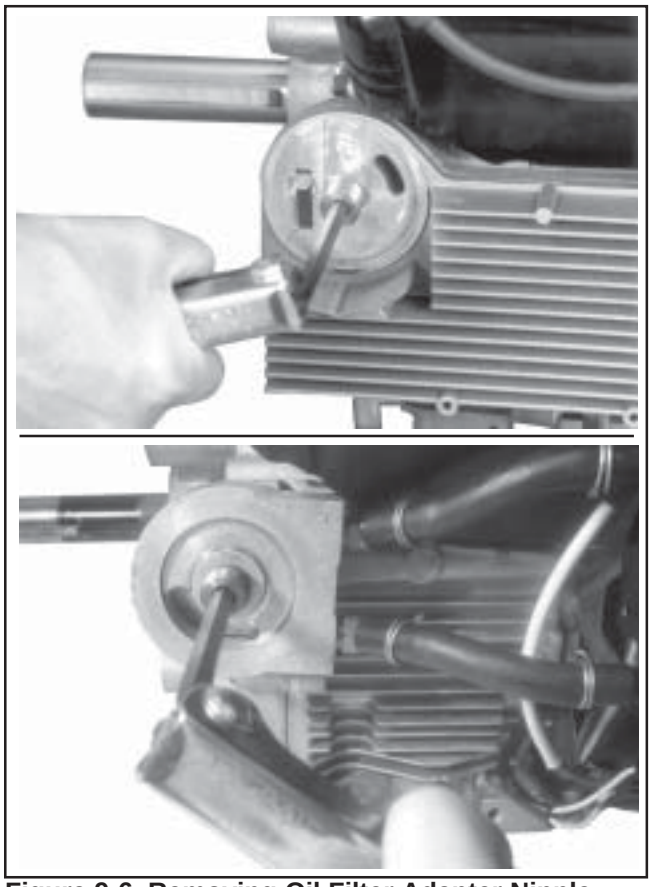

Figure 9-6. Removing Oil Filter Adapter Nipple.

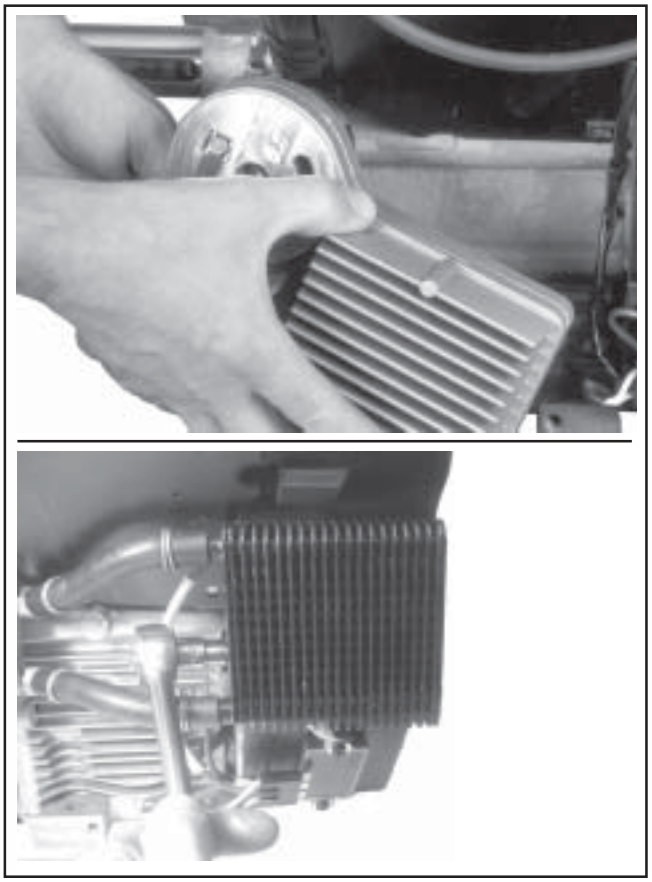

Figure 9-7. Removing Oil Cooler.

4. An oil cooler is standard equipment on some models and an option on others. It may be a cast aluminum housing, part of the oil filter adapter, or attached to the blower housing, separated from the oil filter adapter. If so equipped, remove the adapter and the cooler. See Figures 9-6 and 9-7.

Remove Muffler

1. Remove the exhaust system and attaching hardware from the engine. On engines equipped with a port liner, remove it now.

Remove Air Cleaner Assembly

Standard Air Cleaner

1. Unhook the latches or loosen the knob and remove the cover. Refer to Section 4.

2. Remove the wing nut from the element cover.

3. Remove the element cover, the air cleaner element with precleaner and the stud seal.

4. Remove the hex flange screws securing the bracket and base. See Figure 9-8. Two additional rear screws must be removed if the engine contains a rear air cleaner support bracket. See Figure 9-9.

Figure 9-8. Removing Air Cleaner Base Retainer.

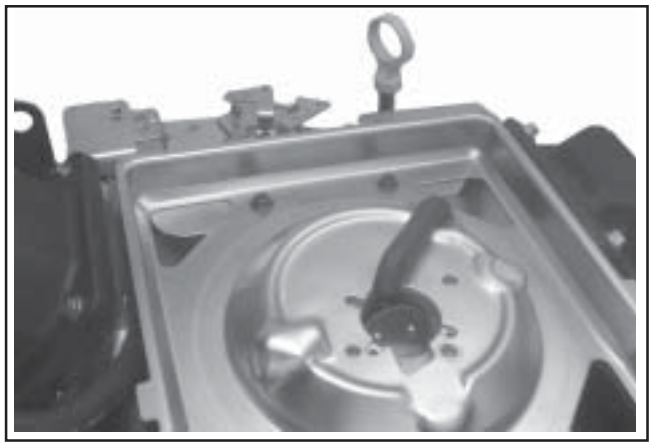

Figure 9-9. Rear Air Cleaner Bracket Screws.

5. Remove the bracket then remove the base and gasket while carefully pulling the rubber breather tube through the base. See Figure 9-10.

Figure 9-10. Removing Breather Tube from Base.

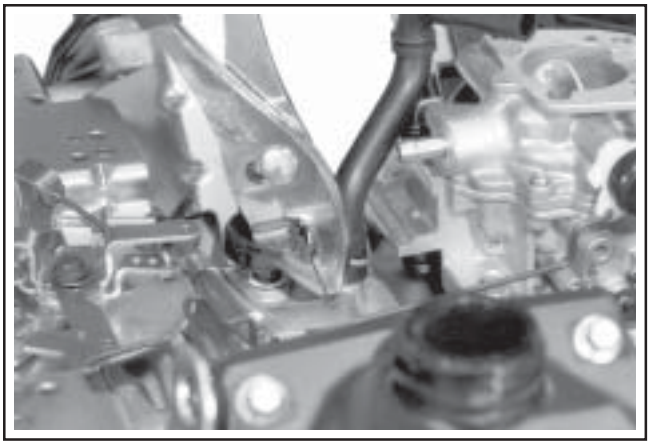

Figure 9-11. Removing Tube from Breather Cover.

6. Remove the rubber breather tube from the breather cover. See Figure 9-11.

Heavy Duty Air Cleaner

1. Disconnect the breather hose from the fitting in adapter or elbow.

2. Remove the two screws (one-barrel carburetor models), or the four hex flange nuts (two-barrel carburetor models), securing the adapter or elbow. See Figure 9-12.

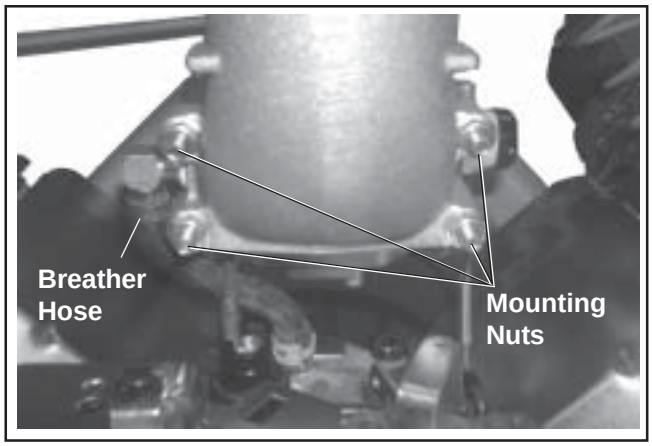

Figure 9-12. Breather Hose, Mounting Nuts, and Adapter Elbow (Two-Barrel Model Pictured).

3. Remove the screws securing the main support bracket for air cleaner to the valve covers. On **two-barrel carburetor models**, remove the two mounting screws into the top of intake manifold. Unhook the choke return spring if equipped. Do not lose any of the hardware. See Figure 9-13.

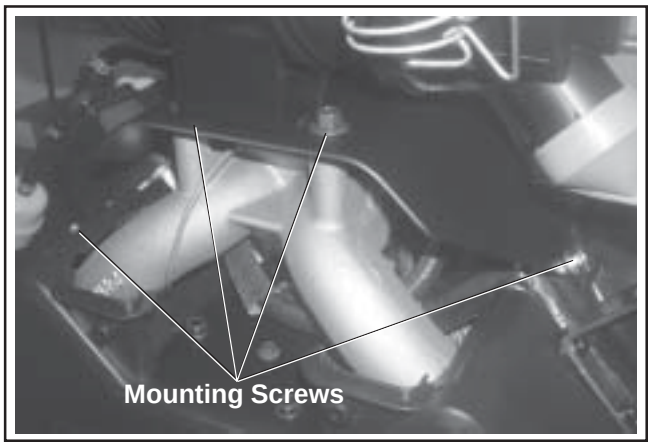

Figure 9-13. Air Cleaner Bracket Mounting Screws (Two-Barrel Model Pictured).

4. Remove the heavy-duty air cleaner as an assembly from the engine. See Figure 9-14.

Figure 9-14. Removing Heavy Duty Air Cleaner Assembly (Two-Barrel Model Pictured).

Remove Fuel Pump

WARNING: Explosive Fuel!

Gasoline is extremely flammable and its vapors can explode if ignited. Store gasoline only in approved containers, in well ventilated, unoccupied buildings, away from sparks or flames. Do not fill the fuel tank while the engine is hot or running, since spilled fuel could ignite if it comes in contact with hot parts or sparks from ignition. Do not start the engine near spilled fuel. Never use gasoline as a cleaning agent.

Pulse Style Pumps

1. Disconnect the fuel lines at the carburetor and at the in-line fuel filter. See Figure 9-15.

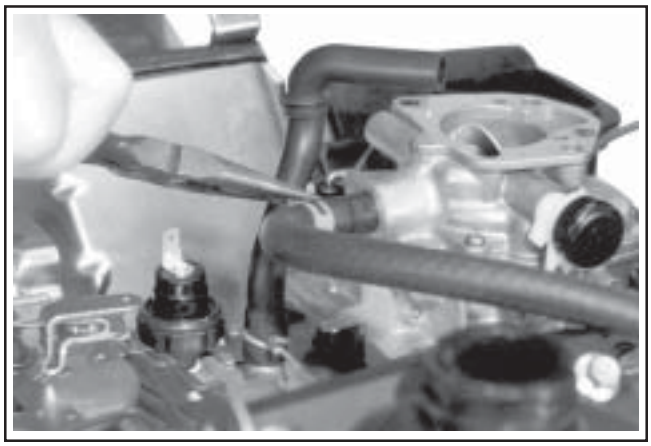

Figure 9-15. Disconnecting Fuel Inlet Line at Carburetor.

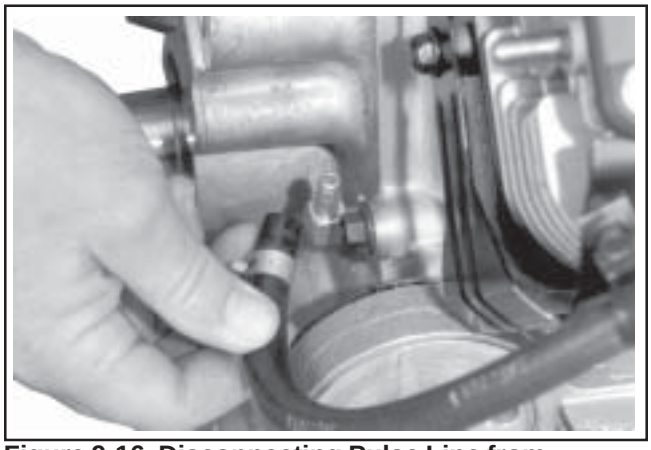

Figure 9-16. Disconnecting Pulse Line from Crankcase.

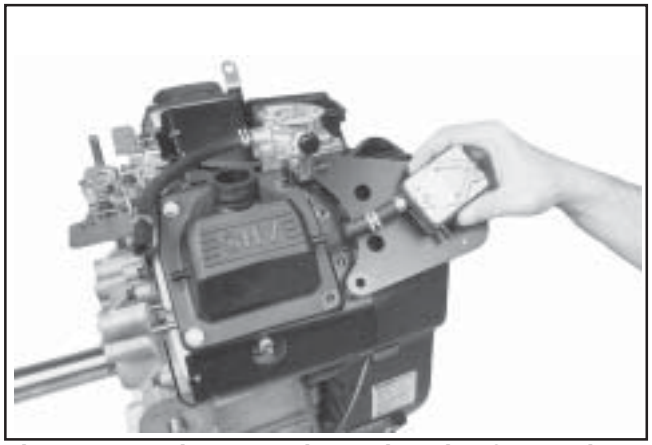

Figure 9-17. Disconnecting Pulse Line from Valve Cover (Early Models).

2. Disconnect the pulse (vacuum) line from the crankcase, or from the valve cover on earlier models. See Figures 9-16 and 9-17.

3. Remove the two hex flange screws securing the fuel pump to the bracket or to the blower housing. See Figure 9-18. The fuel pump body may be metal or plastic.

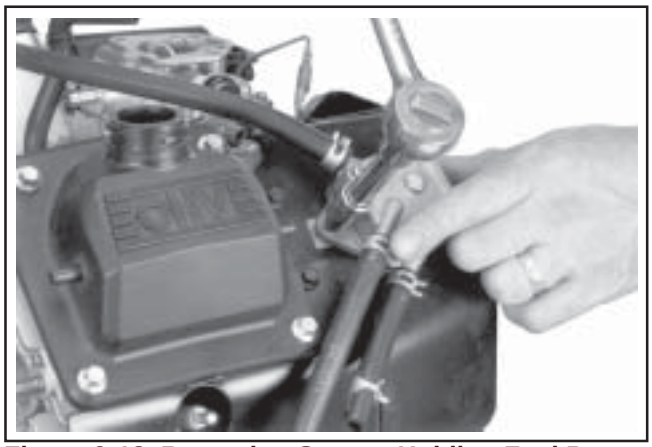

Figure 9-18. Removing Screws Holding Fuel Pump (Metal Bodied Pump Shown).

4. Note or mark the orientation of the fuel pump, then remove the fuel pump with lines attached as shown in Figure 9-19.

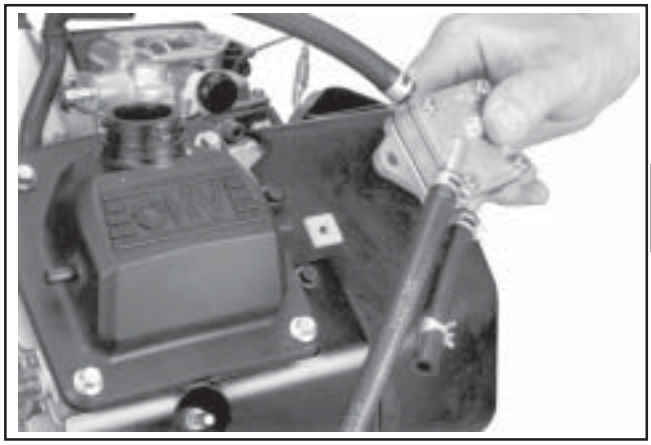

Figure 9-19. Remove Fuel Pump and Lines.

Mechanical Fuel Pump

The mechanical style fuel pump is part of the valve cover assembly. See Figure 9-20.

1. Disconnect the fuel lines at the pump outlet and at the in-line fuel filter.

2. The fuel pump will be removed with the valve cover. Refer to the valve cover removal procedure.

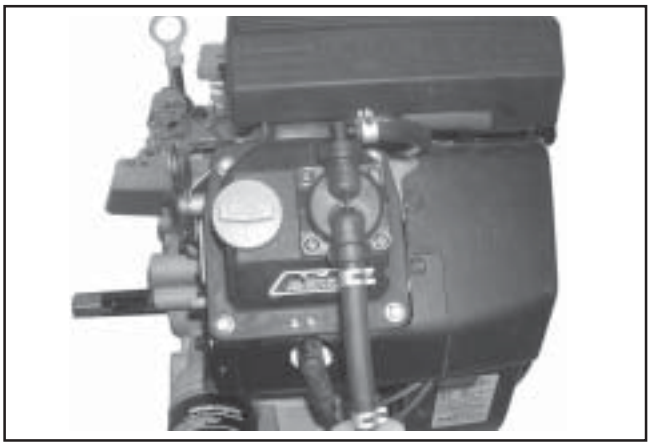

Figure 9-20. Mechanical Fuel Pump.

Remove Control Panel (If So Equipped)

1. Disconnect the Oil Sentry™ Indicator Light wires.

2. Disconnect the choke control cable from the control bracket.

3. Disconnect the throttle control cable or shaft.

4. Remove the panel from the blower housing.

Remove Throttle & Choke Controls

1. Remove the four hex flange screws securing the control bracket and rear air cleaner bracket (some models) to the cylinder heads. See Figures 9-21 and 9-22.

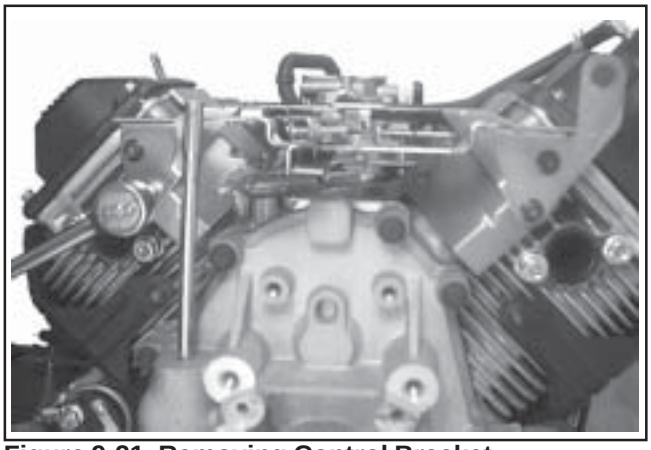

Figure 9-21. Removing Control Bracket.

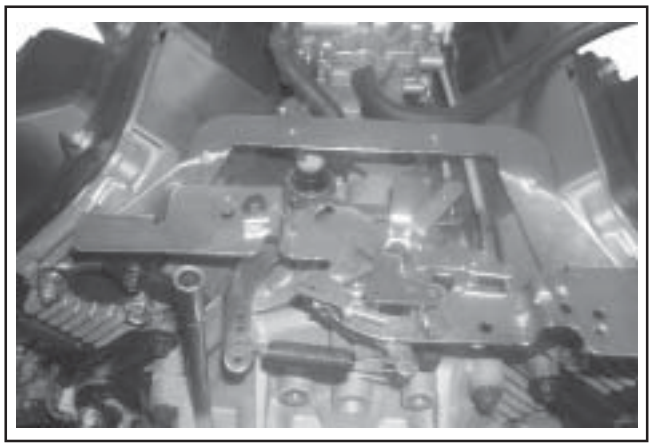

Figure 9-22. Rear Air Cleaner Bracket (Some Models).

2. Mark the spring hole locations and disconnect the spring from the governor lever. See Figure 9-23.

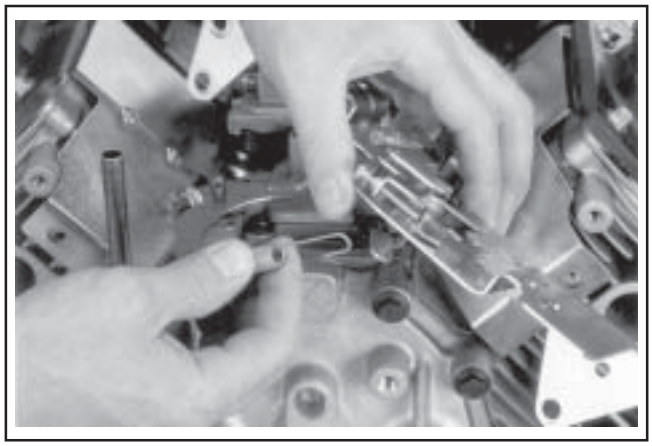

Figure 9-23. Disconnecting Spring from Bracket.

3. Remove the choke linkage from the choke actuator lever and carburetor. See Figure 9-24.

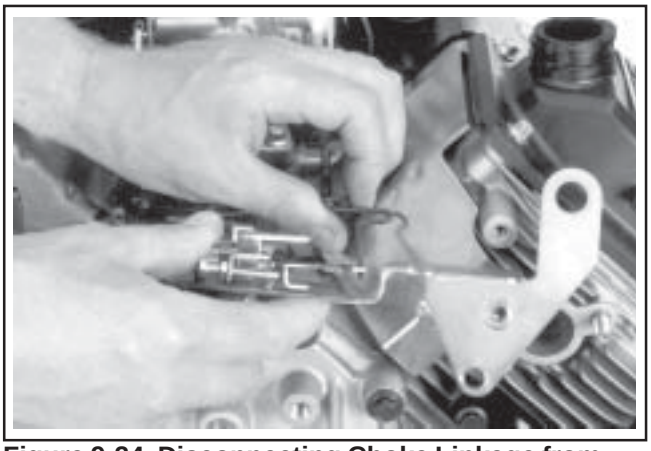

Figure 9-24. Disconnecting Choke Linkage from Actuator Lever.

Remove External Governor Controls

1. Loosen the hex flange nut and remove the governor lever from the cross shaft. See Figure 9-25. Leave lever attached to the throttle linkage and lay assembly on the top of the crankcase.

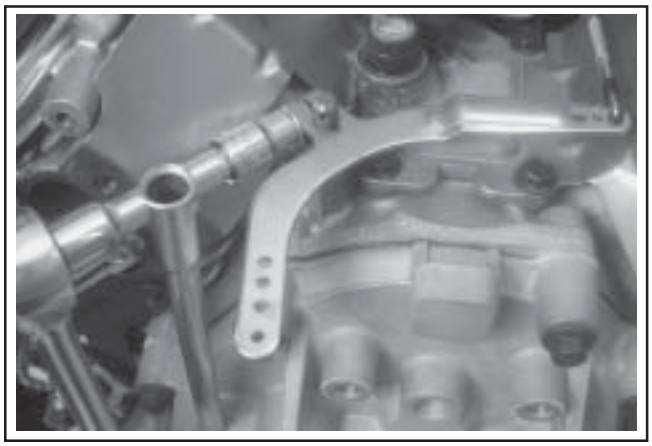

Figure 9-25. Removing Governor Lever.

Remove Carburetor

WARNING: Explosive Fuel!

Gasoline is extremely flammable and its vapors can explode if ignited. Store gasoline only in approved containers, in well ventilated, unoccupied buildings, away from sparks or flames. Do not fill the fuel tank while the engine is hot or running, since spilled fuel could ignite if it comes in contact with hot parts or sparks from ignition. Do not start the engine near spilled fuel. Never use gasoline as a cleaning agent.

1. Disconnect the fuel shut-off solenoid lead and ground lead, if equipped. See Figure 9-26.

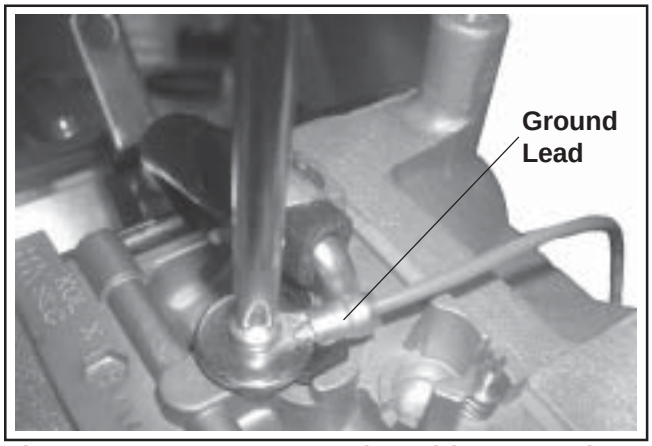

Figure 9-26. Remove Ground Lead (Two-Barrel Model Pictured).

2. **One-Barrel Carburetor Models Only:** Remove the two carburetor mounting screws. See Figure 9-27.

   Two-Barrel Carburetor Models Only: If required use two hex flange nuts locked together and remove the two carburetor mounting studs on the starter side of the intake manifold and one of the studs on the oil filter side.

   Pivot the carburetor to clear the breather cover fitting and pressure switch (if equipped). Remove the carburetor, throttle linkage, choke linkage, and the governor lever as an assembly.

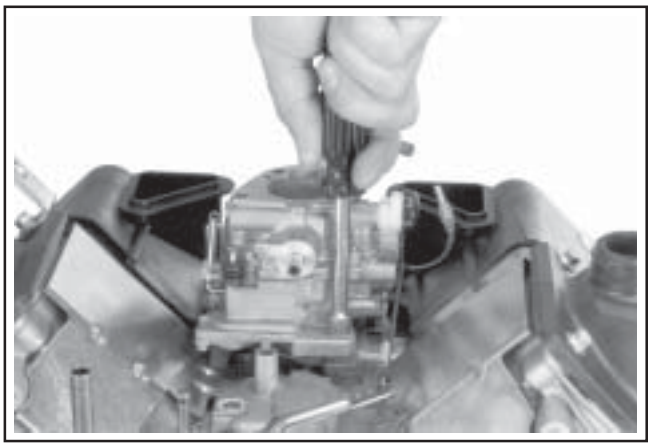

Figure 9-27. Removing Carburetor Mounting Screws.

3. Remove the carburetor, throttle linkage and governor lever as an assembly. See Figure 9-28.

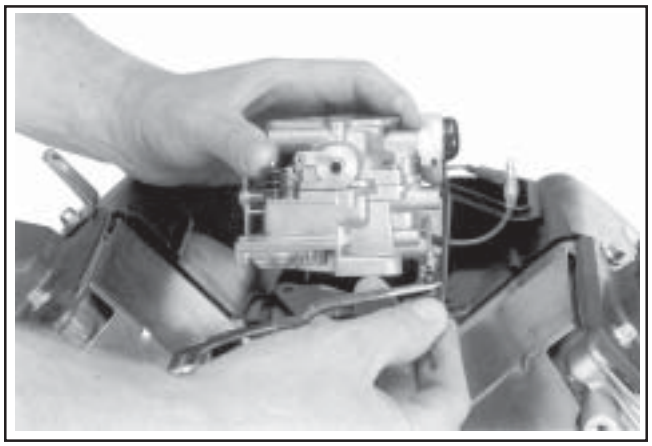

Figure 9-28. Removing Carburetor Assembly with Governor Lever Attached.

4. Remove the carburetor gasket.

5. If necessary, the carburetor, throttle linkage and governor lever can be separated. Reattach the bushings to the linkage following separation to avoid losing them.

Remove Oil Sentry™ (If So Equipped)

1. Disconnect the lead from the Oil Sentry™ switch.

2. Remove the Oil Sentry™ switch from the breather cover. See Figure 9-29.

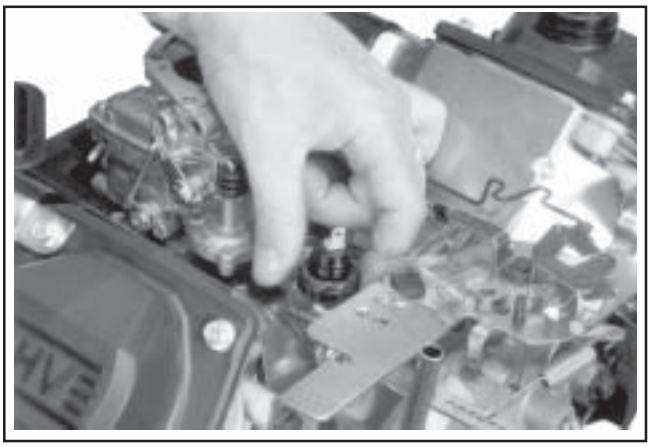

Figure 9-29. Removing Oil Sentry™ Switch from Breather Cover.

Remove Electric Starter Motor

1. Disconnect the leads from the starter.

2. Remove the two hex flange screws. See Figure 9-30.

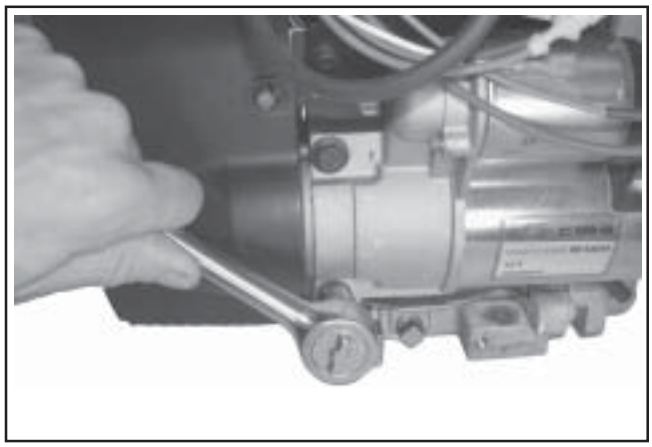

Figure 9-30. Removing Electric Starter Motor.

3. Remove the starter assembly and any spacers (if used).

Remove Outer Baffles and Blower Housing

1. Disconnect the plug from the rectifier-regulator on the blower housing. See Figure 9-31.

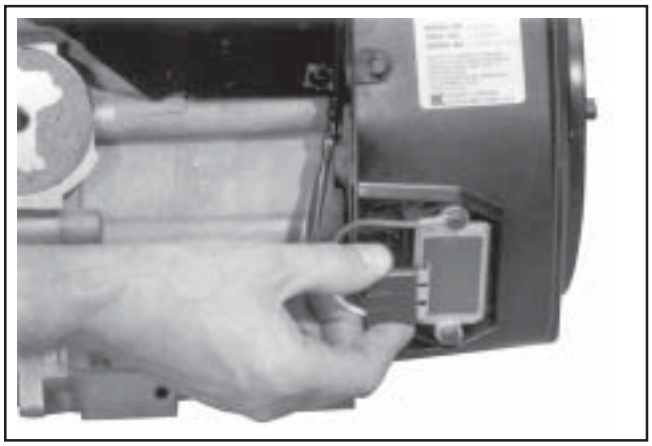

Figure 9-31. Disconnecting Plug from Rectifier-Regulator.

2. Use the tip of the dipstick or a similar small flat tool to bend the locking tang, then remove the B+ (center lead) from the terminal plug as shown in Figure 9-32. This will allow the blower housing to be removed without disturbing the wiring harness.

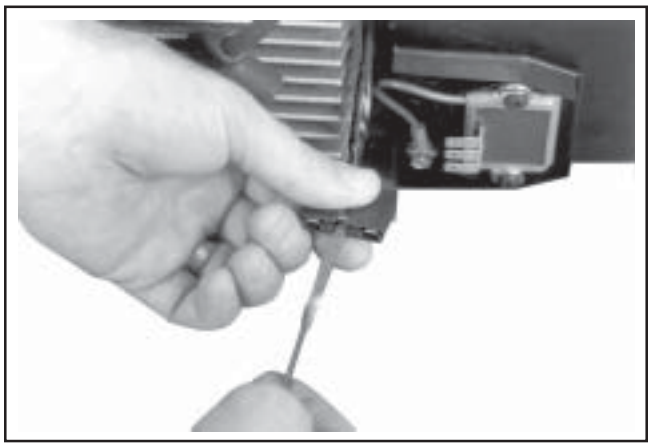

Figure 9-32. Remove B+ Lead from Terminal Plug.

3. The rectifier-regulator does not have to be detached from the blower housing. If the engine is equipped with SMART-SPARK™ the SAM module should be removed from the cylinder baffle or blower housing. See Figure 9-33. The module willing hang loose as part of the wiring harness.

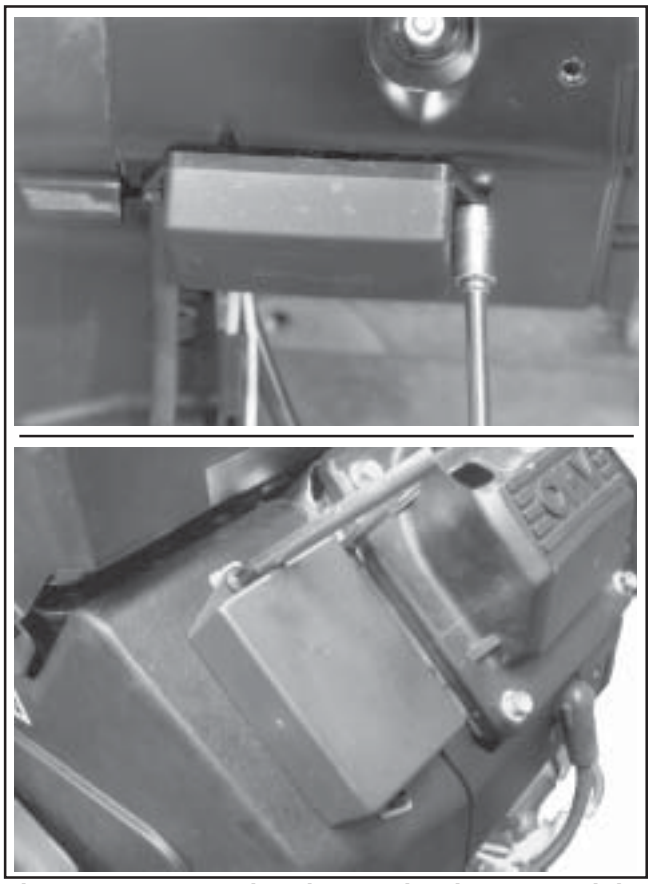

Figure 9-33. Removing the Spark Advance Module (Applicable Models).

4. Remove the three (each side) hex flange screws securing the outer baffles. Note the location of any lifting strap and position of the two short screws (one each side on bottom) for reassembly. See Figure 9-34.

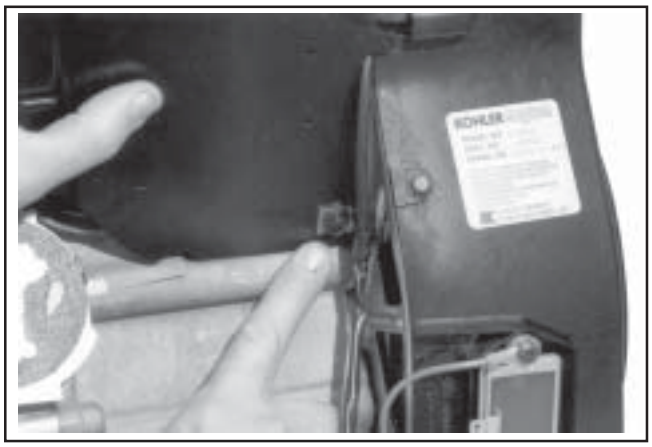

Figure 9-34. Note Location of Two Short Screws.

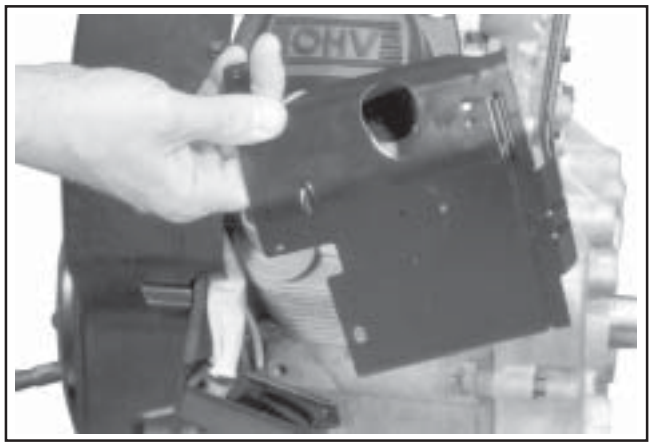

Figure 9-35. Removing Outer Baffles.

5. Remove the outer baffles on both sides. See Figure 9-35.

6. On engines equipped with a metal grass screen, remove the screen before removing the blower housing. See Figure 9-36. Plastic grass screens can be removed after the blower housing is removed.

Figure 9-36. Removing Metal Grass Screen.

7. Remove the lower blower housing screw and washer securing the rectifier-regulator ground lead or grounding strap.

8. **Two-Barrel Carburetor Models Only:** Remove the two screws securing the debris shield to the blower housing. The wiring harness is attached to the underside of shield. See Figure 9-37.

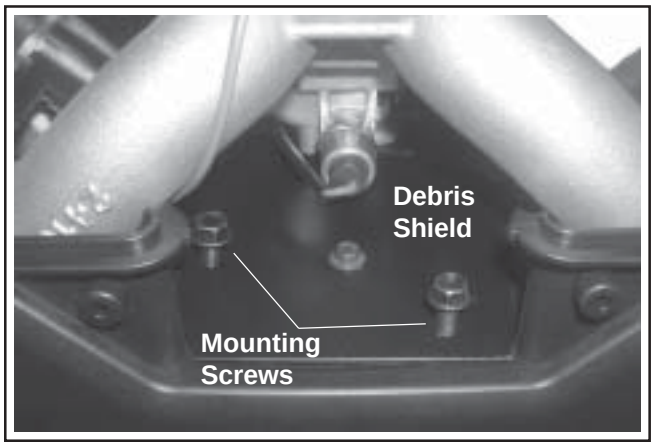

Figure 9-37. Debris Shield Details (Two-Barrel Carburetor Model Shown).

9. Remove the remaining hex flange screws and detach the blower housing. See Figure 9-38.

10. Disconnect the plug from the key switch in the blower housing if engine is so equipped.

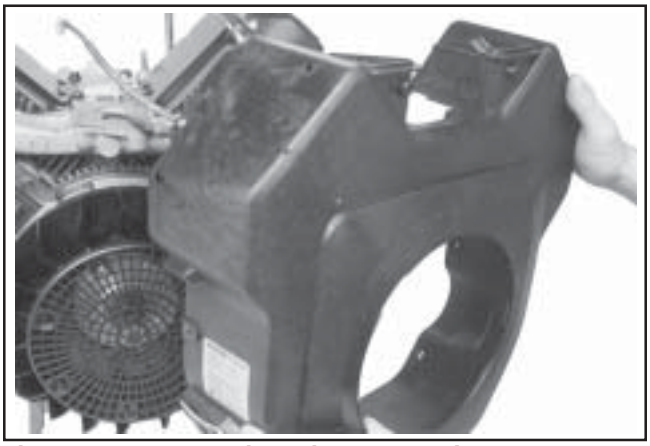

Figure 9-38. Removing Blower Housing.

Remove Inner Baffles and Breather Cover

The inner (valley) baffles are attached at one corner using the same fasteners as the breather cover. See Figure 9-39.

1. Remove the two hex flange screws securing the inner baffles.

Figure 9-39. Removing Fasteners Holding Baffle and Breather Cover.

2. Remove both inner baffles. See Figure 9-40.

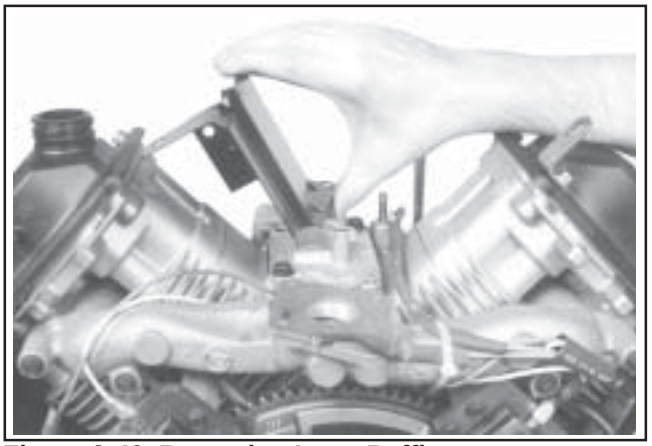

Figure 9-40. Removing Inner Baffles.

3. Remove the two remaining screws holding the breather cover to the crankcase. See Figure 9-40.

4. Pry under the protruding edge of the breather cover with a screwdriver to break the RTV or gasket seal. See Figure 9-41. Do not pry on the sealing surfaces as it could cause damage resulting in leaks. Most engines use a formed gasket rather than RTV sealant.

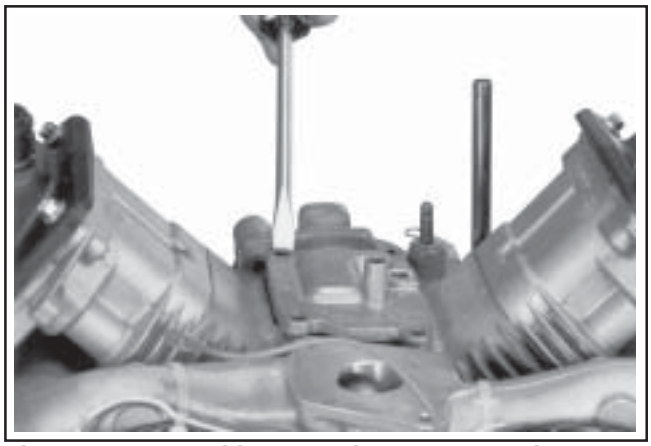

Figure 9-41. Breaking Breather Cover Seal.

5. Remove the breather cover and gasket (if used). See Figure 9-42.

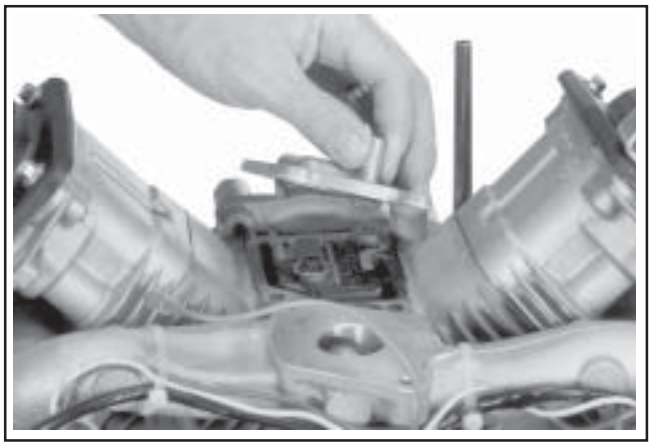

Figure 9-42. Removing Breather Cover.

6. Remove the breather filter from chamber. See Figure 9-43.

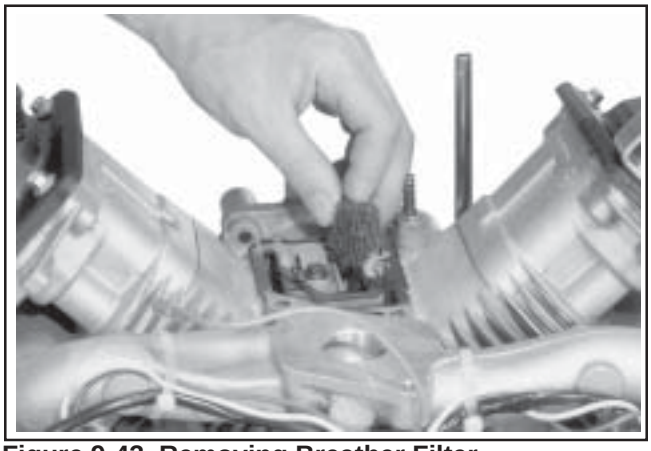

Figure 9-43. Removing Breather Filter.

7. Remove the hex flange screw, breather reed retainer and breather reed. See Figure 9-44.

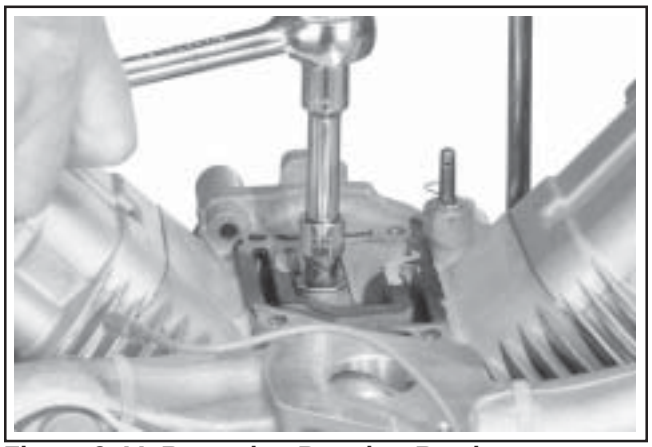

Figure 9-44. Removing Breather Reed.

Remove Valve Covers

Three valve cover designs have been used. The earliest type used a gasket and RTV sealant between the cover and sealing surface of the cylinder head. The second type had a black O-Ring installed in a groove on the underside of the cover and may have metal spacers in the bolt holes. The latest design uses a brown O-Ring, and the bolt holes spacers are molded in place.

1. Remove the four hex flange screws securing each valve cover. Note the position of any attached brackets or lifting straps.

2. Remove the valve covers, valve cover gaskets or O-Rings and any brackets or lifting straps. Note which side of the engine has the oil fill and or fuel pump valve cover. See Figure 9-45.

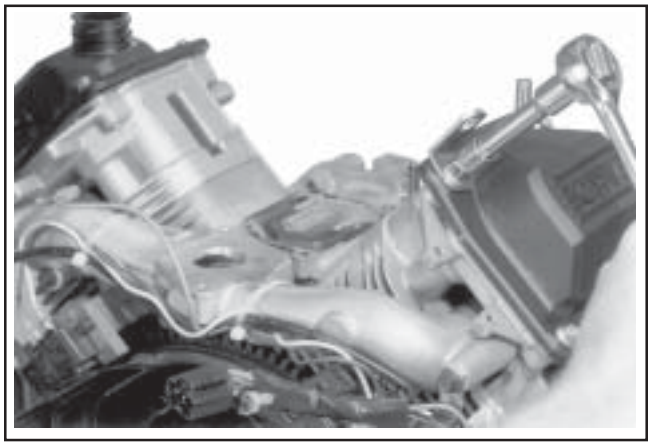

Figure 9-45. Removing Valve Covers.

Remove Ignition Modules

1. Disconnect the lead(s)* from each ignition module. See Figure 9-46. *Modules for non-SMART-SPARK™ ignition systems have only one kill lead.

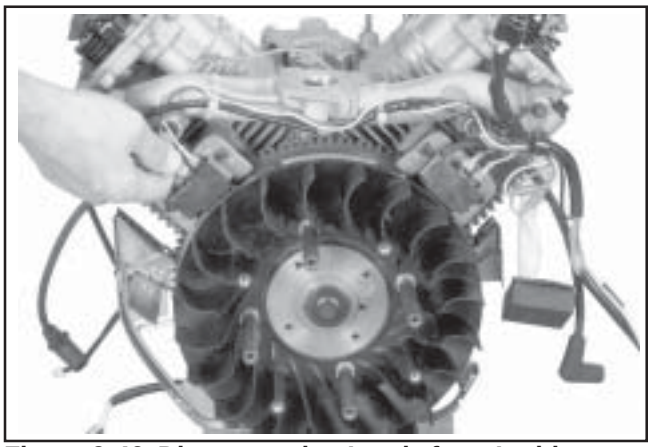

Figure 9-46. Disconnecting Leads from Ignition Modules.

2. Rotate the flywheel so the magnet is away from the modules.

3. Remove the mounting screws and ignition modules. Note the position of ignition modules.

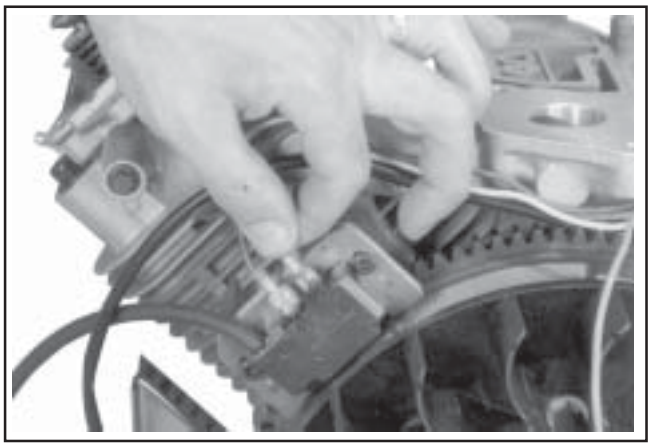

Figure 9-47. Position of SMART-SPARK™ Ignition Module.

Remove Intake Manifold

1. Remove the four hex flange screws securing the intake manifold to the cylinder heads. Note which screws hold the wiring clamps.

2. Remove the intake manifold and the intake manifold gaskets (aluminum intake manifolds) or O-Rings (plastic intake manifolds). See Figure 9-48.

3. Leave the wiring harness attached to the manifold.

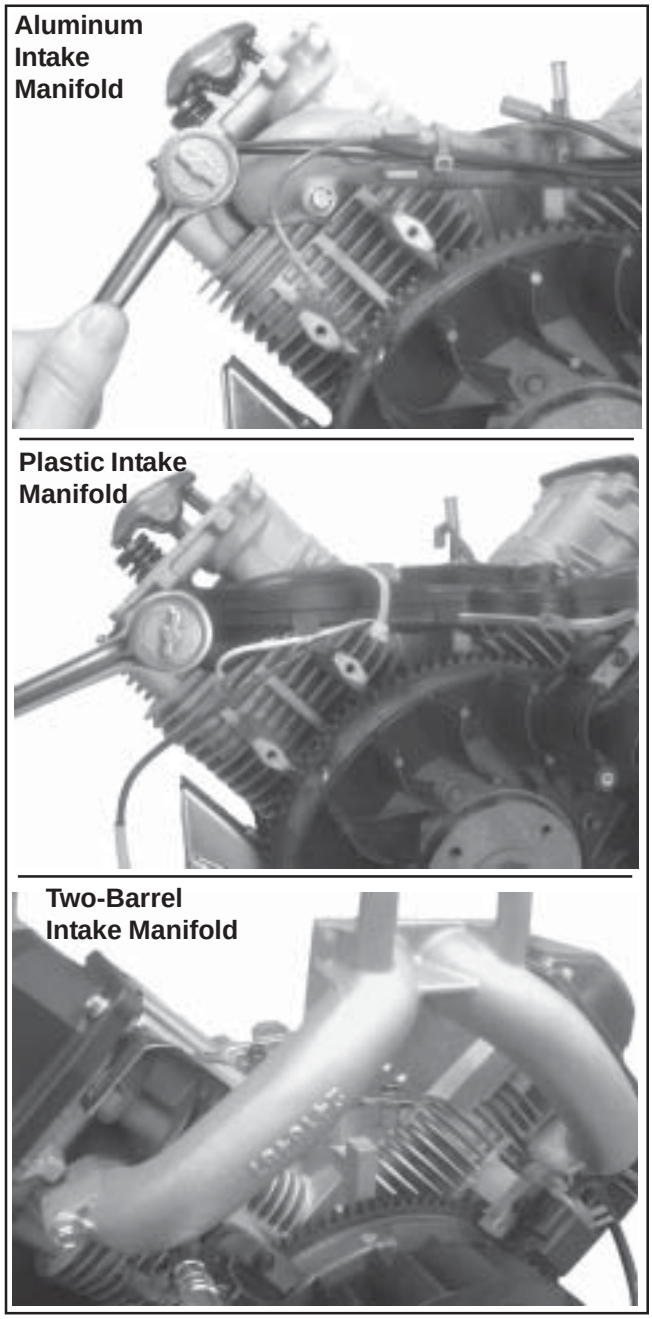

Figure 9-48. Removing Intake Manifold.

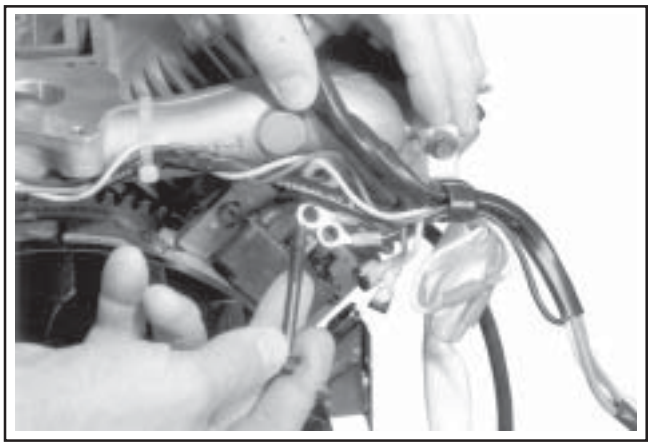

Figure 9-49. Bolt Wiring Harness Detail.

Remove Spark Plugs

1. Remove the spark plug from each cylinder head.

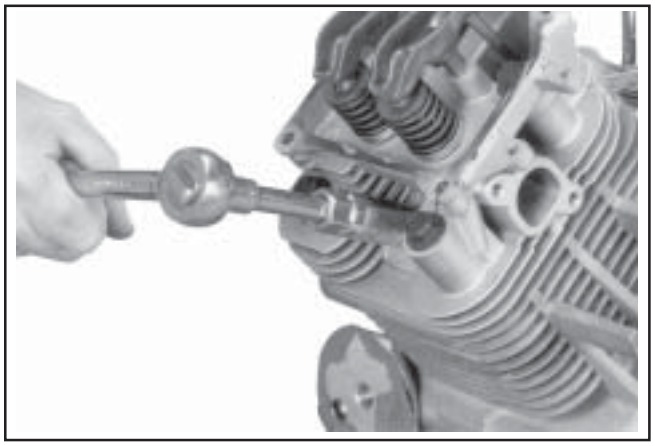

Figure 9-50. Removing Spark Plugs.

Remove Cylinder Heads and Hydraulic Lifters

NOTE: Cylinder heads are retained using either hex flange screws or hex flange nuts and washers on studs. Do not interchange or mix components, as the cylinder heads may have different machining, unique to each fastening method.

1. Remove the four hex flange screws or hex nuts and washers securing each cylinder head. See Figure 9-51. Discard the screws or nuts and washers once removed. Do not reuse. Studs (if present) should only be removed if damaged or if cylinder reconditioning is necessary. Once removed, they must be replaced.

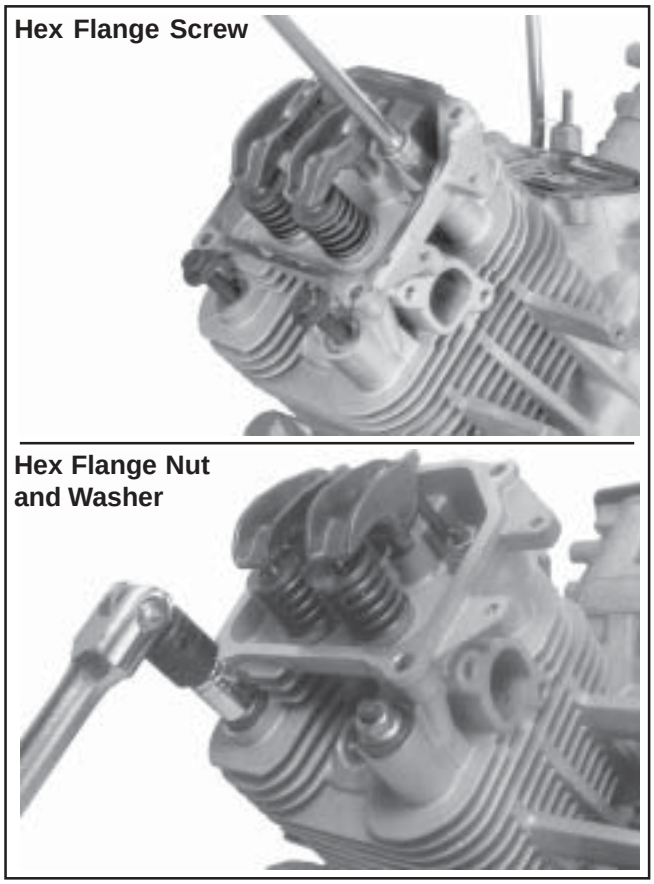

Figure 9-51. Removing Cylinder Head Fasteners.

2. Mark the position of the push rods as either intake or exhaust and cylinder 1 or 2. Push rods should always be reinstalled in the same positions.

3. Carefully remove the push rods, cylinder heads and head gaskets. See Figure 9-52.

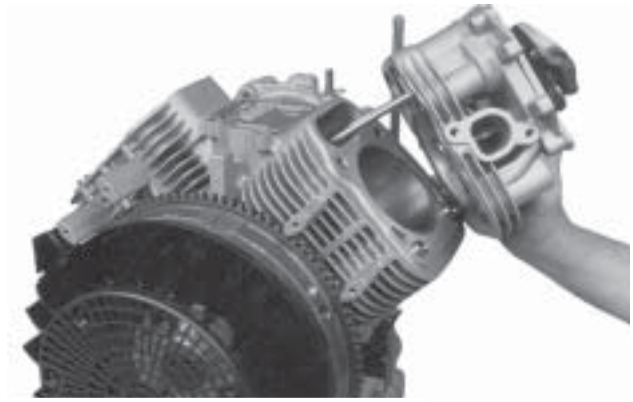

Hex Flange Screw Style Mounting

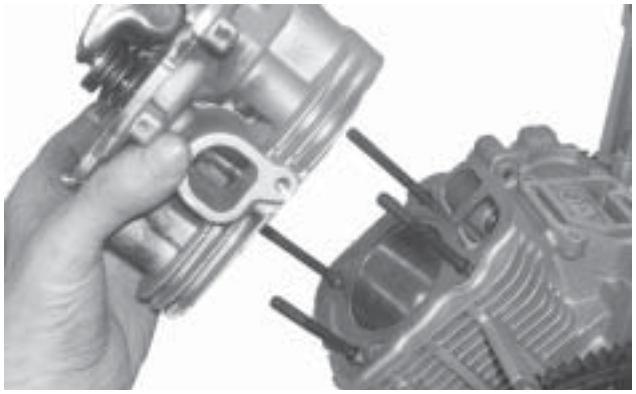

Stud and Hex Flange Nut Style Mounting

Figure 9-52. Removing Cylinder Head Assembly.

4. Remove the lifters from the lifter bores. Use a Hydraulic Lifter Tool. Do not use a magnet to remove lifters. Mark the lifters by location, as either intake or exhaust and cylinder 1 or 2. Hydraulic lifters should always be reinstalled in the same position. See Figures 9-53 and 9-54.

NOTE: The exhaust lifters are located on the output shaft side of the engine while the intake lifters are located on the fan side of the engine. The cylinder head number is embossed on the outside of each cylinder head. See Figure 9-55.

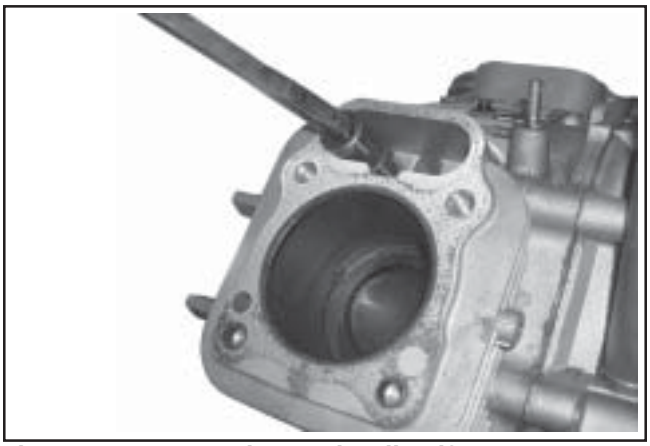

Figure 9-53. Removing Hydraulic Lifter.

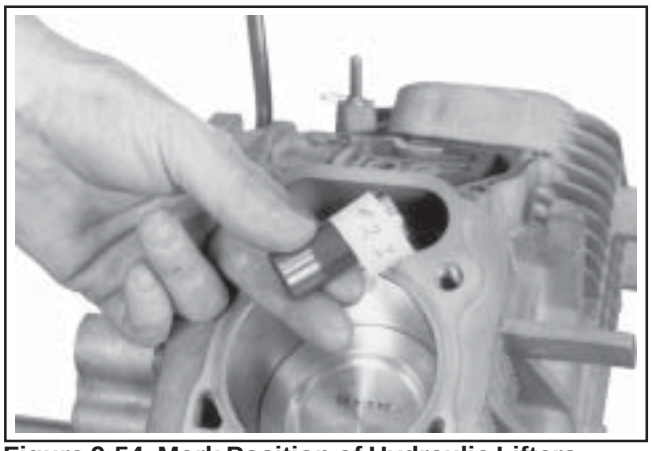

Figure 9-54. Mark Position of Hydraulic Lifters.

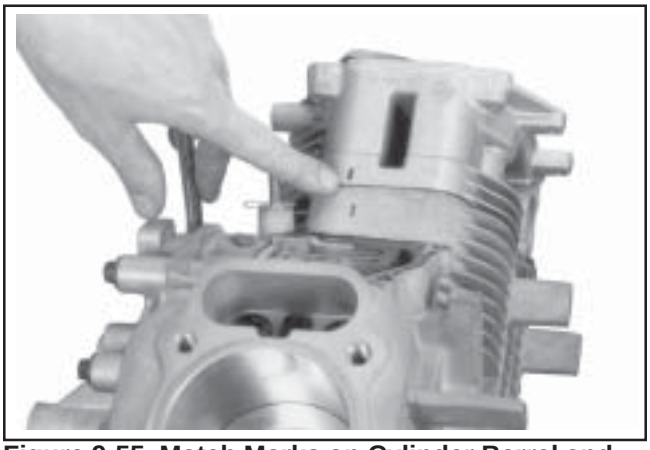

Figure 9-55. Match Marks on Cylinder Barrel and Heads.

Disassemble Cylinder Heads

1. Remove the two hex flange screws, rocker arm pivots and rocker arms from the cylinder head. See Figure 9-56.

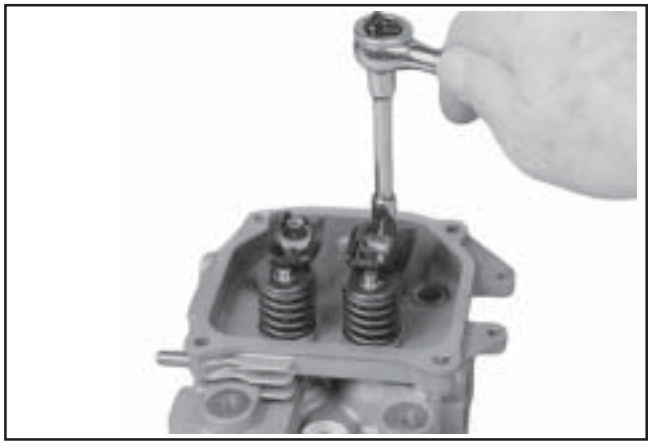

Figure 9-56. Removing Rocker Arms.

2. Compress the valve springs using a valve spring compressor. See Figure 9-57.

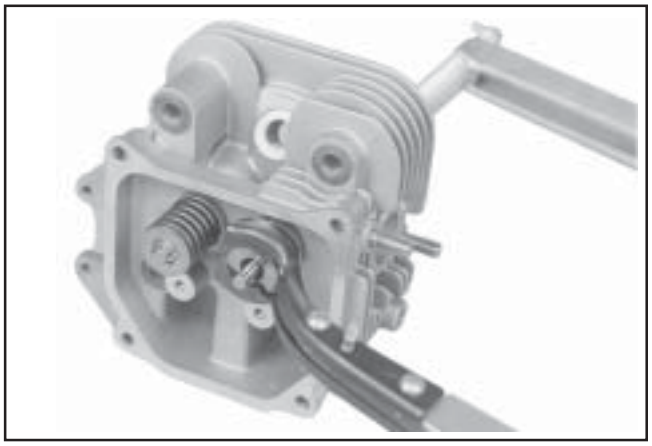

Figure 9-57. Removing Valves with Valve Spring Compressor.

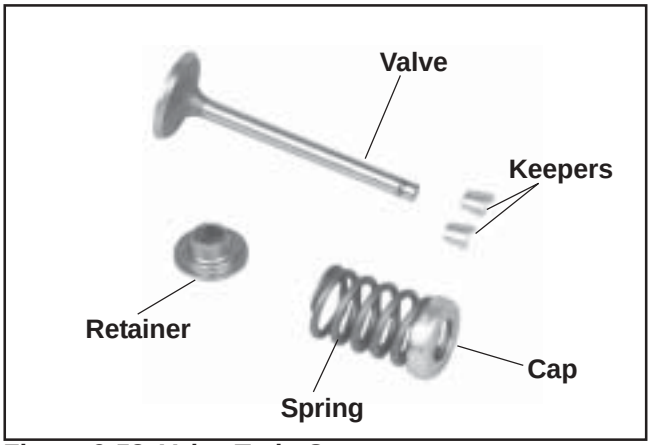

Figure 9-58. Valve Train Components.

3. Once the valve spring is compressed, remove the following items. See Figures 9-58 and 9-59.

   - Valve spring keepers
   - Valve spring retainers
   - Valve springs
   - Valve spring caps
   - Intake and exhaust valves (mark position)
   - Valve stem seals (intake valve only)

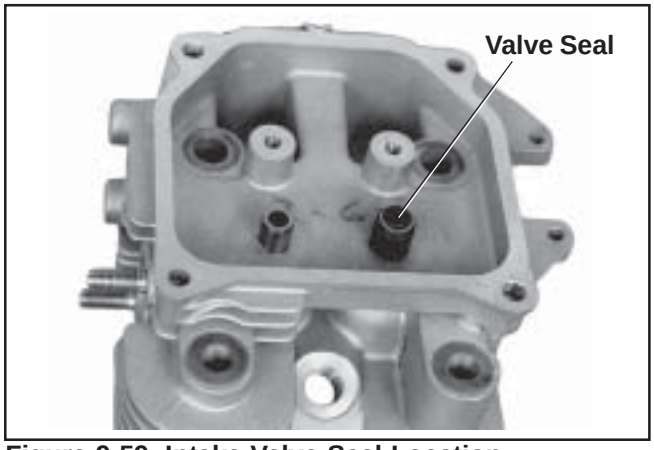

Figure 9-59. Intake Valve Seal Location.

NOTE: These engines use valve stem seals on the intake valves. Use a new seal whenever valve is removed or if the seal is deteriorated in any way. Never reuse an old seal.

4. Repeat the above procedure for the other cylinder head. Do not interchange parts from one cylinder head to the other.

Remove Grass Screen and Fan

1. Small metal retainers are typically attached on three of the seven mounting posts for positive retention of the plastic grass screen. Use a hook-end tool next to the post and pull outward to separate each of the small metal retainers. Then unsnap the fan from the remaining mounting posts. See Figure 9-60.

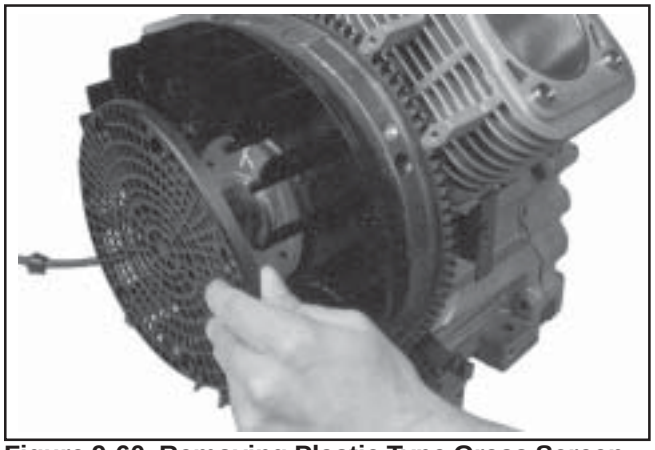

Figure 9-60. Removing Plastic Type Grass Screen.

2. Remove the four hex flange screws and fan. See Figure 9-61.

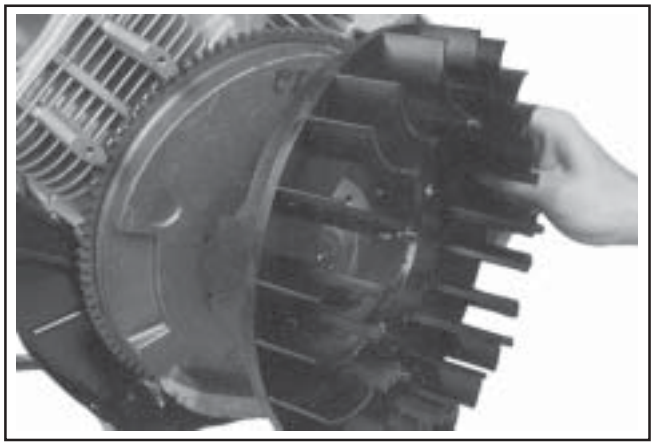

Figure 9-61. Removing Fan.

Remove Flywheel

1. Use a flywheel strap wrench or holding tool (see Section 2) to hold the flywheel and loosen the hex flange screw securing the flywheel to the crankshaft. See Figure 9-62.

   NOTE: Always use a flywheel strap wrench or holding tool to hold the flywheel when loosening or tightening the flywheel screw. **Do not** use any type of bar or wedge to hold the flywheel. Use of such tools could cause the flywheel to become cracked or damaged.

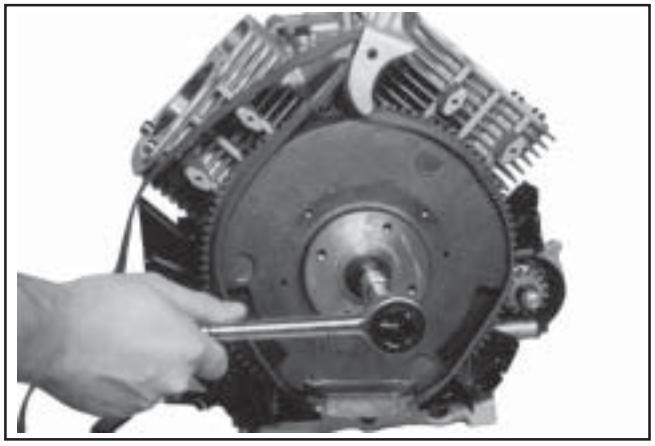

Figure 9-62. Removing Flywheel Fastener Using Strap Wrench.

2. Remove the hex flange screw and washer.

3. Use a puller to remove the flywheel from the crankshaft. See Figure 9-63.

   NOTE: Always use a flywheel puller to remove the flywheel from the crankshaft. **Do not** strike the crankshaft or flywheel, as these parts could become cracked or damaged. Striking the puller or crankshaft can cause the crank gear to move, affecting the crankshaft end play.

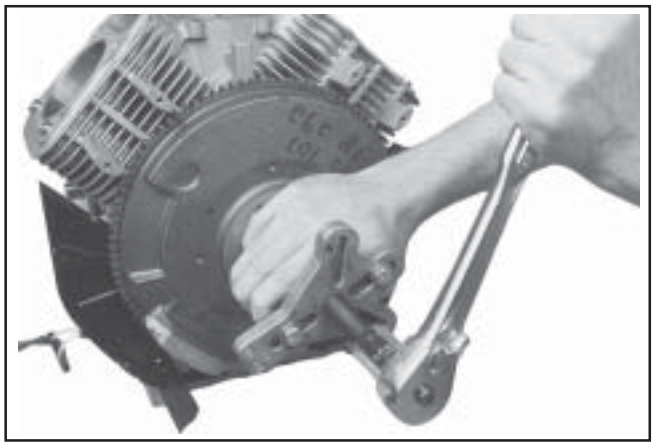

Figure 9-63. Removing Flywheel with a Puller.

4. Remove the woodruff key from the crankshaft.

Remove Stator and Backing Plates

1. Remove the four hex flange screws securing the backing plates and stator wire bracket (if equipped). See Figure 9-64. Remove the backing plates and stator wire bracket.

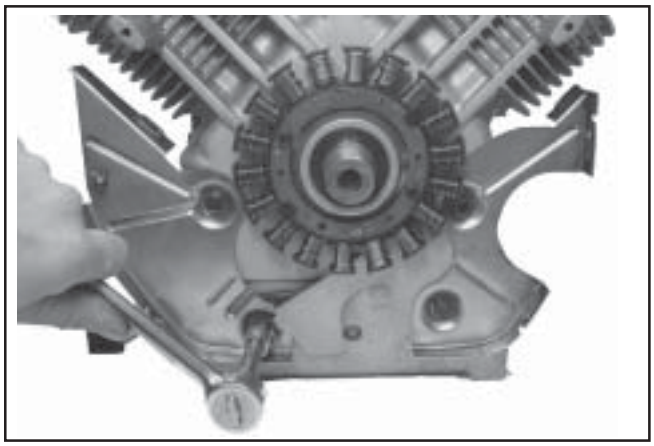

Figure 9-64. Removing Backing Plates and Stator Wire Bracket.

2. Remove the two hex head screws and stator. See Figure 9-65. Note the routing of the stator lead in the channel.

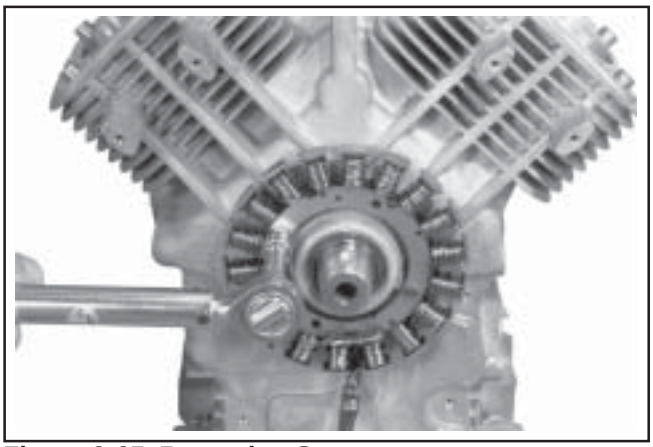

Figure 9-65. Removing Stator.

Remove Closure Plate Assembly

1. Remove the ten hex flange screws securing the closure plate to the crankcase. See Figure 9-66.

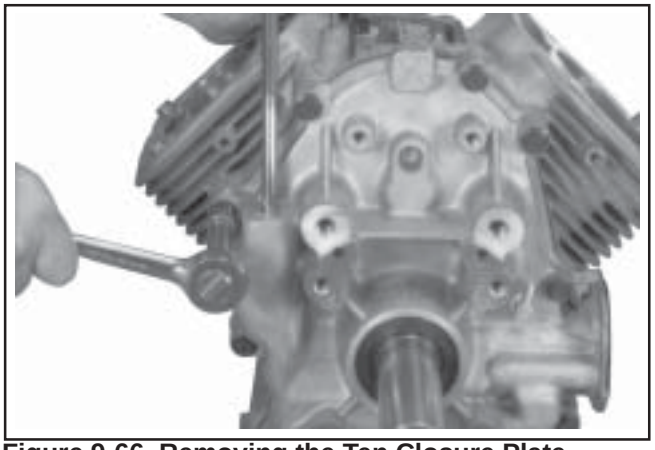

Figure 9-66. Removing the Ten Closure Plate Fasteners.

2. Locate the three splitting tabs that are cast into the perimeter of the closure plate. Insert the drive end of a 1/2" breaker bar between the top splitting tab and the crankcase. Hold the handle horizontal and pull toward you to break the RTV seal. If necessary, pry at the bottom tabs also. See Figures 9-67 and 9-68. Do not pry on the sealing surfaces as this could cause leaks. Carefully pull closure plate from crankcase.

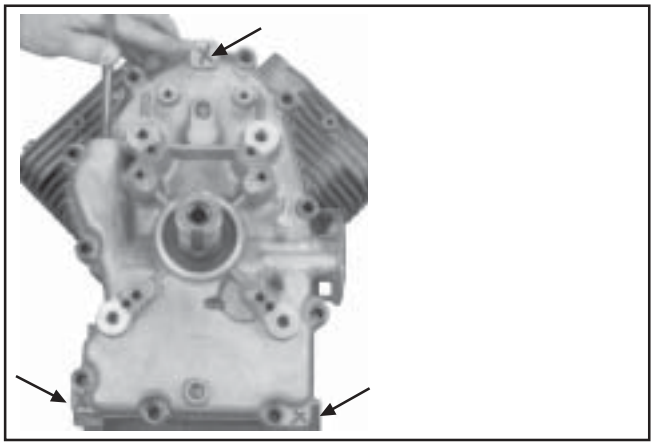

Figure 9-67. Location of Three Splitting Tabs.

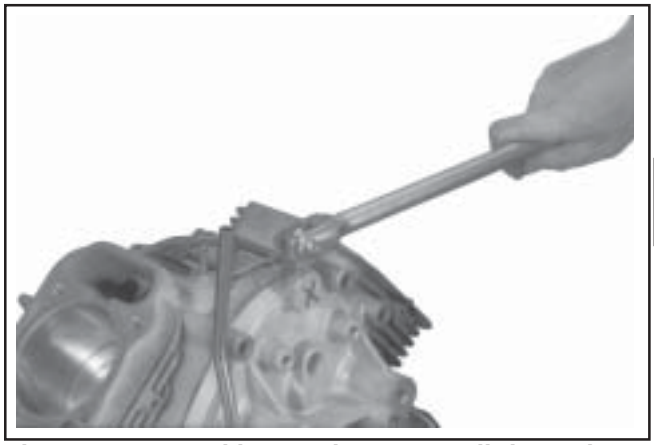

Figure 9-68. Breaking Seal on Top Splitting Tab.

Governor Gear Assembly

The governor gear assembly is located inside the closure plate. If service is required, refer to the service procedures under ''Governor Gear Assembly'' in Section 10.

Oil Pump Assembly

The oil pump is mounted to the inside of the closure plate. If service is required, refer to the service procedures under ''Oil Pump Assembly'' in Section 10.

Remove Camshaft

1. Remove the camshaft and shim. See Figure 9-69.

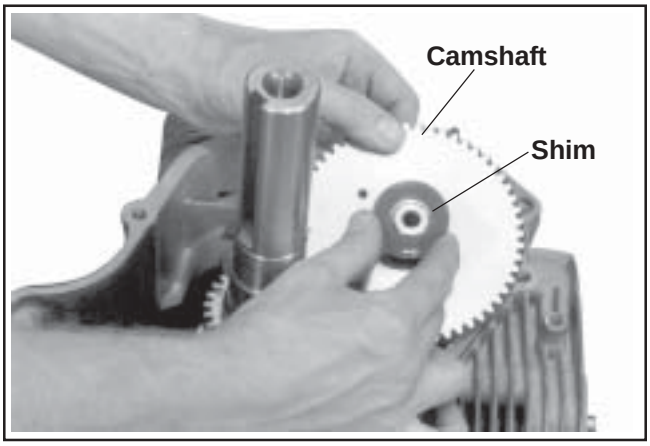

Figure 9-69. Removing Camshaft (Note Shim).

Remove Connecting Rods with Pistons and Rings

1. Remove the two hex flange screws securing the closest connecting rod end cap. Remove the end cap. See Figure 9-70.

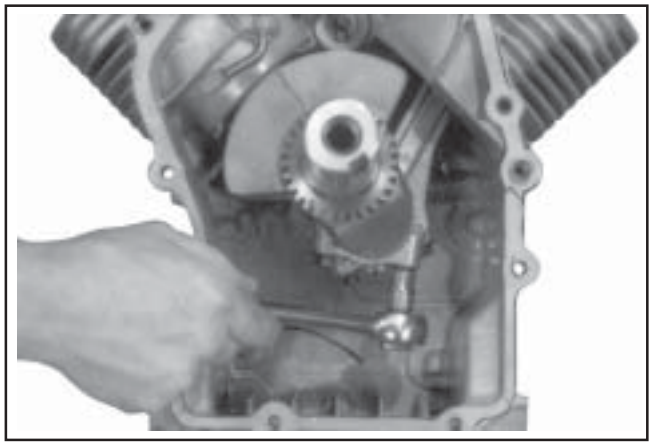

Figure 9-70. Removing Connecting Rod Bolts.

NOTE: If a carbon ridge is present at the top of either cylinder bore, use a ridge reamer tool to remove the ridge before attempting to remove the piston.

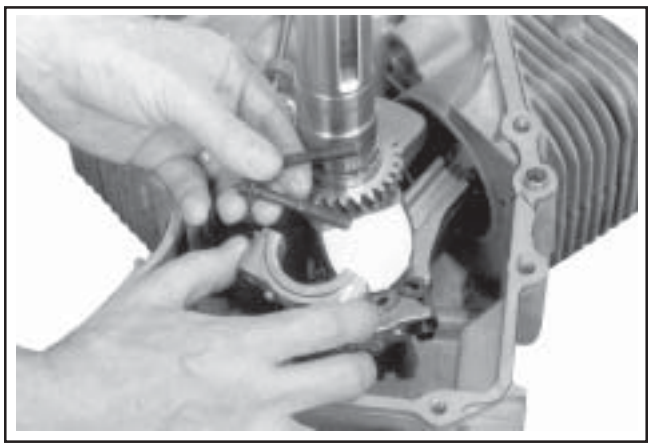

Figure 9-71. Mark End Cap with Cylinder Number Before Removal.

NOTE: The cylinders are numbered on the crankcase. Use the numbers to mark each end cap, connecting rod and piston for reassembly. **Do not** mix end caps and connecting rods.

Figure 9-72. Removing Piston/Connecting Rod Assemblies.

2. Carefully remove the connecting rod and piston assembly from the cylinder bore. See Figure 9-72.

3. Repeat the above procedures for the other connecting rod and piston assembly.

Remove Crankshaft

1. Carefully pull the crankshaft from the crankcase. See Figure 9-73. Note thrust washers and shims if used.

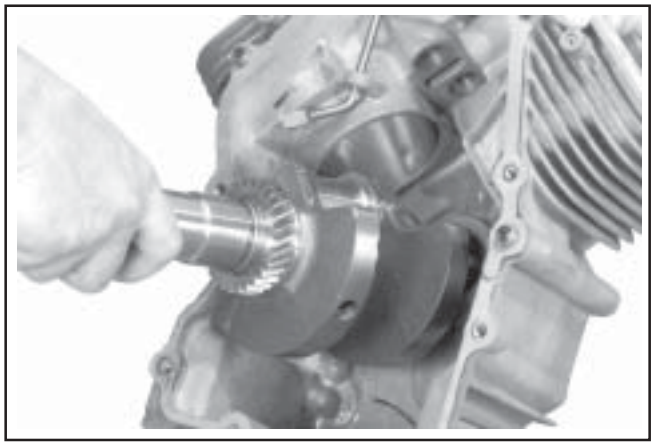

Figure 9-73. Removing Crankshaft.

Remove Governor Cross Shaft

1. Remove the hitch pin and plain washer, or the retainer and nylon washer from the governor cross shaft. See Figures 9-74 and 9-75.

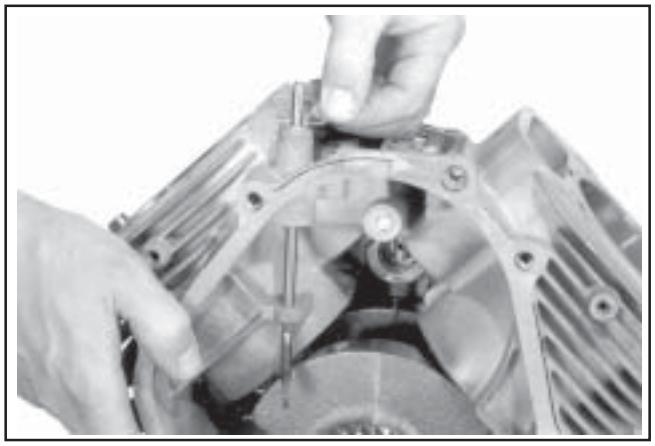

Figure 9-74. Removing Governor Cross Shaft Hitch Pin (6 mm Shaft Design).

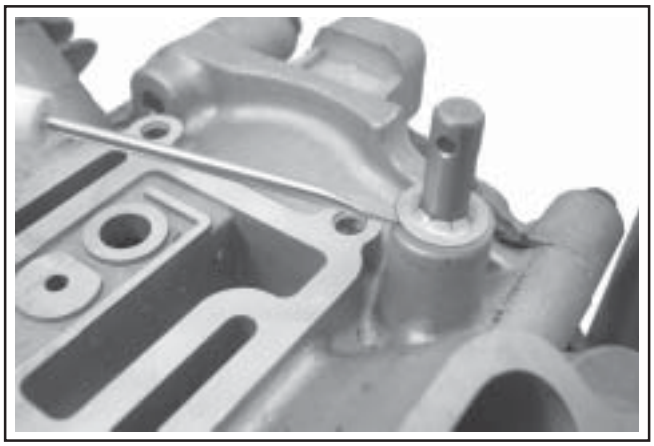

Figure 9-75. Removing Governor Cross Shaft Retainer (8 mm Shaft Design).

2. Pull the cross shaft with small washer out through the inside of the crankcase. See Figure 9-76.

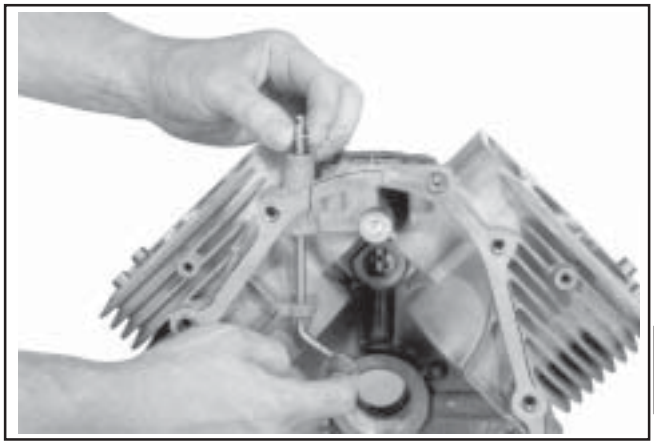

Figure 9-76. Pulling Governor Cross Shaft.

Remove Flywheel End Oil Seal

1. Remove oil seal from crankcase. See Figure 9-77.

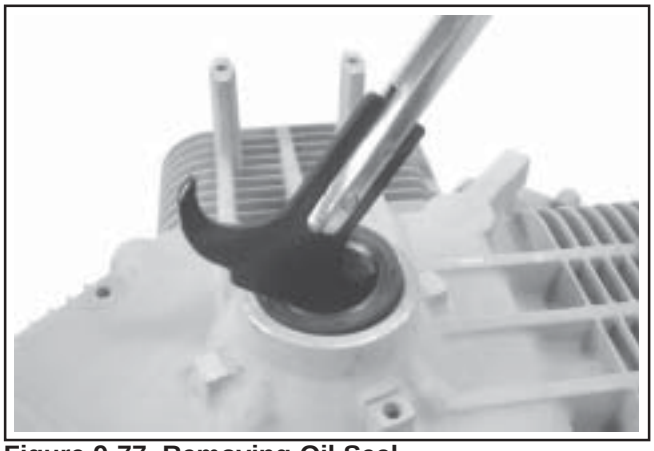

Figure 9-77. Removing Oil Seal.

Section 10
Inspection and Reconditioning

This section covers the operation, inspection, and repair/reconditioning of major internal engine components. The following components are not covered in this section. They are covered in sections of their own:

Air Cleaner, Section 4
Carburetor & External Governor, Section 5
Ignition, Charging & Electric Starter, Section 8

Clean all parts thoroughly. Only clean parts can be accurately inspected and gauged for wear or damage. There are many commercially available cleaners that will quickly remove grease, oil, and grime from engine parts. When such a cleaner is used, follow the manufacturer's instructions and safety precautions carefully. Make sure all traces of the cleaner are removed before the engine is reassembled and placed into operation. Even small amounts of these cleaners can quickly break down the lubricating properties of engine oil.

Use an aerosol gasket remover, paint stripper, or lacquer thinner to remove any old sealant. Apply the solvent, allow time for it to work, and then brush the surface with a **brass** wire brush. After the old sealant is removed, clean the surface with isopropyl alcohol, lacquer thinner, or aerosol electrical contact cleaner. **Do not** scrape the surfaces, as any scratches, nicks, or burrs can result in leaks. See Service Bulletin 252 for further information.

Refer to A Guide to Engine Rebuilding (TP-2150-A) for additional information. Measurement Guide (TP-2159-B) and Engine Inspection Data Record (TP-2435) are also available; use these to record inspection results.

Automatic Compression Release (ACR)

Some engines are equipped with the optional Automatic Compression Release (ACR) mechanism. The ACR lowers compression at cranking speeds to make starting easier.

Operation

The ACR mechanism consists of a flyweight, spring and pivoting control pin assembly attached to the gear on the camshaft. At cranking speeds (700 RPM or lower), the control pin protrudes above the exhaust cam lobe. This pushes the exhaust valve off its seat during the first part of the compression stroke. The reduced compression results in an effective compression ratio of about 2:1 during cranking.

After starting, engine speed increases to over 700 RPM, and centrifugal force overcomes the force of the flyweight spring. The flyweight moves outward, pulling the arm of the control pin, so it pivots into the ''run'' position. The control pin no longer has any effect on the exhaust valve and the engine operates at full power.

When the engine is stopped, the spring returns the flyweight lever and control pin assembly to the compression release position ready for the next start.

Camshaft

Inspection and Service

Check the lobes of the camshaft for wear or damage. See Section 1 for minimum lift specifications. Inspect the cam gear for badly worn, chipped or missing teeth. Replacement of the camshaft will be necessary if any of these conditions exist.

Crankshaft

Inspection and Service

Inspect the gear teeth of the crankshaft. If the teeth are badly worn, chipped, or some are missing, replacement of the crankshaft will be necessary.

Inspect the crankshaft bearing surfaces for scoring, grooving, etc. Some engines have bearing inserts in the crankshaft bore of the closure plate and/or crankcase. Do not replace bearings unless they show signs of damage or are out of running clearance specifications. If the crankshaft turns easily and noiselessly, and there is no evidence of scoring, grooving, etc., on the races or bearing surfaces, the bearings can be reused.

Inspect the crankshaft keyways. If they are worn or chipped, replacement of the crankshaft will be necessary.

Inspect the crankpin for score marks or metallic pickup. Slight score marks can be cleaned with crocus cloth soaked in oil. If the wear limits, as stated in "Specifications and Tolerances" are exceeded, it will be necessary to either replace the crankshaft or regrind the crankpin to **0.25 mm (0.010 in.)** undersize. If reground, a **0.25 mm (0.010 in.)** undersize connecting rod (big end) must then be used to achieve proper running clearance. Measure the crankpin for size, taper, and out-of-round.

NOTE: If the crankpin is reground, visually check to ensure that the fillet blends smoothly with the crankpin surface. See Figure 10-1.

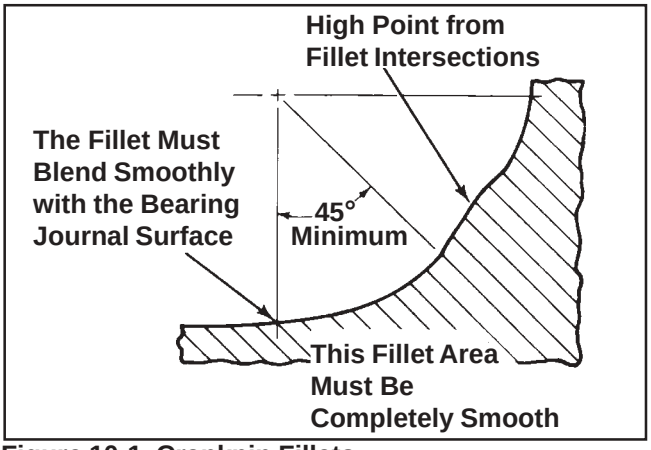

Figure 10-1. Crankpin Fillets.

The connecting rod journal can be ground one size under. When grinding a crankshaft, grinding stone deposits can get caught in the oil passages, which could cause severe engine damage. Removing the crankpin plug when the crankshaft is ground provides easy access for removing any grinding deposits that may collect in the oil passages.

Use the following procedure to remove and replace the plug.

Procedure to Remove Crankshaft Plug:

1. Drill a 3/16" hole through the plug in the crankshaft.

2. Thread a 3/4" or 1" long self-tapping screw with a flat washer into the drilled hole. The flat washer must be large enough to seat against the shoulder of the plug bore. See Figure 10-2.

3. Tighten the self-tapping screw until it draws the plug out of the crankshaft.

Procedure to Install New Plug:

1. Use a single cylinder camshaft pin, Kohler Part No. **47 380 09-S** as a driver and tap the plug into the plug bore until it seats at the bottom of the bore. Make sure the plug is tapped in evenly to prevent leakage.

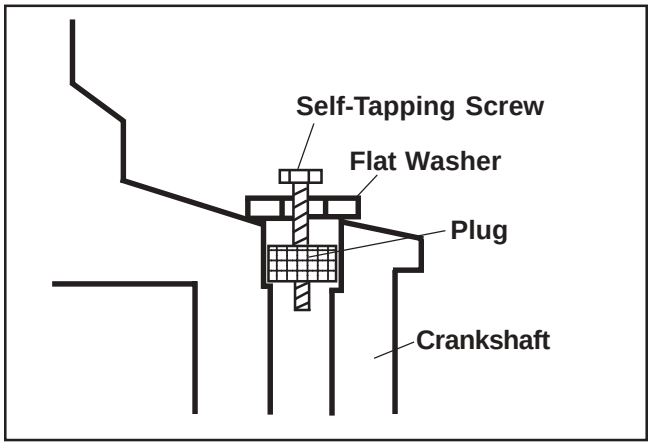

Figure 10-2. Removing Crankpin Plug.

Crankcase

Inspection and Service

Check all gasket surfaces to make sure they are free of gasket fragments. Gasket surfaces must also be free of deep scratches or nicks.

Inspect the main bearing (if so equipped) for wear or damage (refer to Section 1, "Specifications, Tolerances, and Special Torque Values"). Replace the crankcase using a miniblock or short block as required.

Check the cylinder bore wall for scoring. In severe cases, unburned fuel can cause scuffing and scoring of the cylinder wall. It washes the necessary lubricating oils off the piston and cylinder wall. As raw fuel seeps down the cylinder wall, the piston rings make metal to metal contact with the wall. Scoring of the cylinder wall can also be caused by localized hot spots resulting from blocked cooling fins or from inadequate or contaminated lubrication.

If the cylinder bore is badly scored, excessively worn, tapered, or out-of-round, resizing is necessary. Use an inside micrometer to determine the amount of wear (refer to the "Specifications, Tolerances, and Special Torque Values", in Section 1), then select the nearest suitable oversize of either **0.25 mm (0.010 in.)** or **0.50 mm (0.020 in.)**. Resizing to one of these oversizes will allow usage of the available oversize piston and ring assemblies. First, resize using a boring bar, then use the following procedures for honing the cylinder.

NOTE: Some CH25-26 engines feature POWER-BORE™ cylinders a special patented nickel-silicone plating process for increased power, superior oil control, reduced exhaust emission, and virtually permanent cylinder life. POWER-BORE™ cylinders cannot be resized or honed as described in the following procedure. If a plated cylinder bore is damaged or out of specification, use a new miniblock or short block to repair the engine. Use the following procedure for crankcases with a cast iron sleeve.

Honing

While most commercially available cylinder hones can be used with either portable drills or drill presses, the use of a low speed drill press is preferred as it facilitates more accurate alignment of the bore in relation to the crankshaft crossbore. Honing is best accomplished at a drill speed of about **250 RPM** and **60 strokes** per minute. After installing coarse stones in hone, proceed as follows:

1. Lower hone into bore and after centering, adjust so the stones are in contact with the cylinder wall. Use of a commercial cutting-cooling agent is recommended.

2. With the lower edge of each stone positioned even with the lowest edge of the bore, start drill and honing process. Move the hone up and down while resizing to prevent the formation of cutting ridges. Check the size frequently.

NOTE: Kohler pistons are custom-machined to exacting tolerances. When oversizing a cylinder, it should be machined exactly **0.25 mm (0.010 in.)** or **0.50 mm (0.020 in.)** over the new diameter (Section 1). The corresponding oversize Kohler replacement piston will then fit correctly.

3. When the bore is within **0.064 mm (0.0025 in.)** of the desired size, remove the coarse stones and replace them with burnishing stones. Continue with the burnishing stones until the bore is within **0.013 mm (0.0005 in.)** of the desired size and then use finish stones (220-280 grit) and polish the bore to its final size. A crosshatch should be observed if honing is done correctly. The crosshatch should intersect at approximately 23°-33° off the horizontal. Too flat an angle could cause the rings to skip and wear excessively, and too steep an angle will result in high oil consumption. See Figure 10-3.

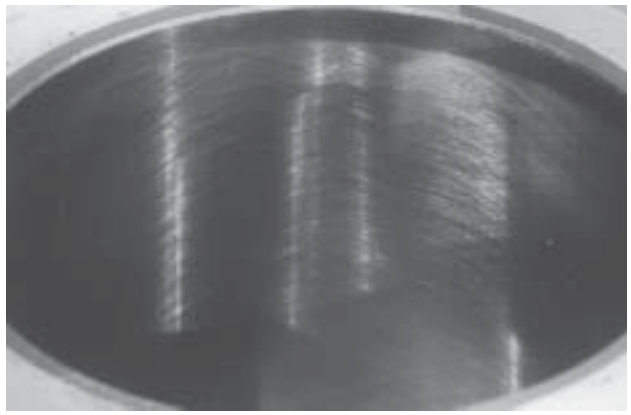

Figure 10-3. Cylinder Bore Crosshatch after Honing.

4. After resizing, check the bore for roundness, taper, and size. Use an inside micrometer, telescoping gauge, or bore gauge to take measurements. The measurements should be taken at three locations in the cylinder – at the top, middle, and bottom. Two measurements should be taken (perpendicular to each other) at each of the three locations.

Clean Cylinder Bore After Honing

Proper cleaning of the cylinder walls following boring and/or honing is very critical to a successful overhaul. Machining grit left in the cylinder bore can destroy an engine in less than one hour of operation after a rebuild.

The final cleaning operation should always be a thorough scrubbing with a brush and hot, soapy water. Use a strong detergent that is capable of breaking down the machining oil while maintaining a good level of suds. If the suds break down during cleaning, discard the dirty water and start again with more hot water and detergent. Following the scrubbing, rinse the cylinder with very hot, clear water, dry it completely, and apply a light coating of engine oil to prevent rusting.

Measuring Piston-to-Bore Clearance

Before installing the piston into the cylinder bore, it is necessary that the clearance be accurately checked. This step is often overlooked, and if the clearances are not within specifications, engine failure will usually result.

NOTE: Do not use a feeler gauge to measure piston-to-bore clearance – it will yield inaccurate measurements. Always use a micrometer.

Use the following procedure to accurately measure the piston-to-bore clearance:

1. Use a micrometer and measure the diameter of the piston **6 mm (0.24 in.)** above the bottom of the piston skirt and perpendicular to the piston pin. See Figure 10-4.

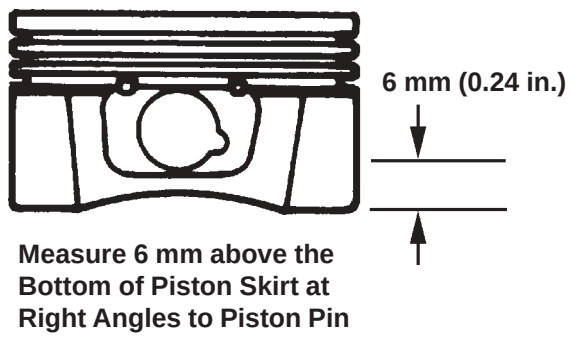

Figure 10-4. Measuring Piston Diameter.

2. Use an inside micrometer, telescoping gauge, or bore gauge and measure the cylinder bore. Take the measurement approximately **63.5 mm (2.5 in.)** below the top of the bore and perpendicular to the piston pin.
3. Piston-to-bore clearance is the difference between the bore diameter and the piston diameter (step 2 minus step 1).

Flywheel

Inspection

Inspect the flywheel for cracks and the flywheel keyway for damage. Replace the flywheel if it is cracked. Replace the flywheel, the crankshaft, and the key if flywheel key is sheared or the keyway is damaged.

Inspect the ring gear for cracks or damage. Kohler does not provide the ring gear as a serviceable part. Replace the flywheel if the ring gear is damaged.

Cylinder Head and Valves

Inspection and Service

After cleaning, check the flatness of the cylinder head and the corresponding top surface of the crankcase, using a surface plate or piece of glass and feeler gauge as shown in Figure 10-5. The maximum allowable out of flatness is **0.076 mm (0.003 in.)**.

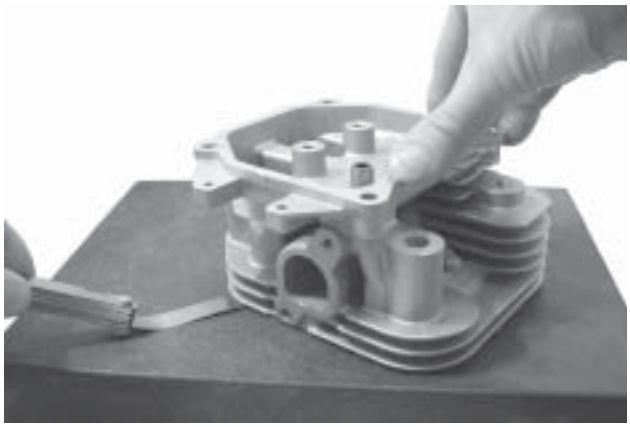

Figure 10-5. Checking Cylinder Head Flatness.

Carefully inspect the valve mechanism parts. Inspect the valve springs and related hardware for excessive wear or distortion. Check the valves and valve seat area or inserts for evidence of deep pitting, cracks, or distortion. Check clearance of the valve stems in the guides. See Figure 10-6 for valve details and specifications.

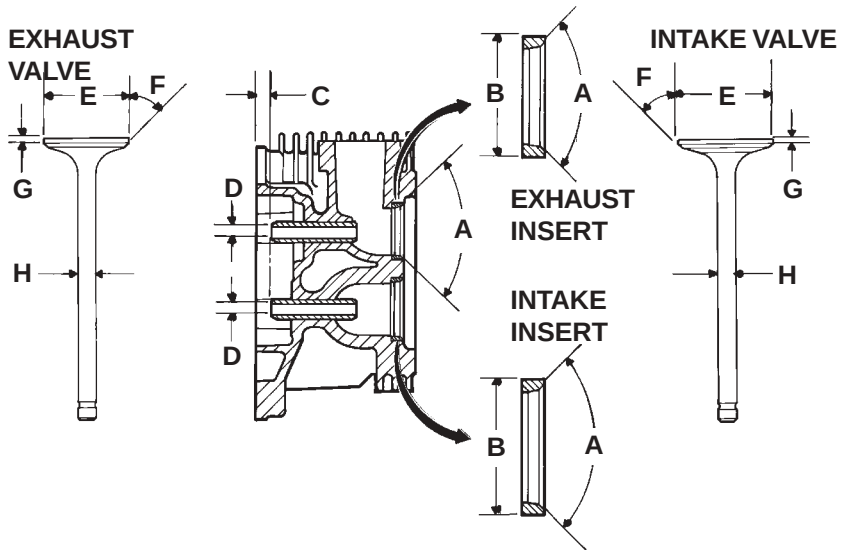

	Dimension	Intake	Exhaust
A	Seat Angle	89°	89°
B	Insert O.D.	36.987/37.013 mm (1.4562/1.4572 in.)	32.987/33.013 mm (1.2987/1.2997 in.)
C	Guide Depth	4 mm (0.1575 in.)	6.5 mm (0.2559 in.)
D	Guide I.D.	7.038/7.058 mm (0.2771/0.2779 in.)	7.038/7.058 mm (0.2771/0.2779 in.)
E	Valve Head Diameter	33.37/33.63 mm (1.3138/1.3240 in.)	29.37/29.63 mm (1.1563/1.1665 in.)
F	Valve Face Angle	45°	45°
G	Valve Margin (Min.)	1.5 mm (0.0591 in.)	1.5 mm (0.0591 in.)
H	Valve Stem Diameter	6.982/7.000 mm (0.2749/0.2756 in.)	6.970/6.988 mm (0.2744/0.2751 in.)

Figure 10-6. Valve Details.

Hard starting or loss of power accompanied by high fuel consumption may be symptoms of faulty valves. Although these symptoms could also be attributed to worn rings, remove and check the valves first. After removal, clean the valve heads, faces, and stems with a power wire brush.

Then, carefully inspect each valve for defects such as a warped head, excessive corrosion, or a worn stem end. Replace valves found to be in bad condition. A normal valve and valves in bad condition are shown in the accompanying illustrations.

Normal: Even after long hours of operation a valve can be reconditioned and reused if the face and margin are in good shape. If a valve is worn to where the margin is less than 1/32" do not reuse it. The valve shown was in operation for almost 1000 hours under controlled test conditions.

Leakage: A poor grind on face or seat of valve will allow leakage resulting in a burned valve on one side only.

Bad Condition: The valve depicted here should be replaced. Note the warped head; margin damaged and too narrow. These conditions could be attributed to excessive hours or a combination of poor operating conditions.

Coking: Coking is normal on intake valves and is not harmful. If the seat is good, the valve could be reused after cleaning.

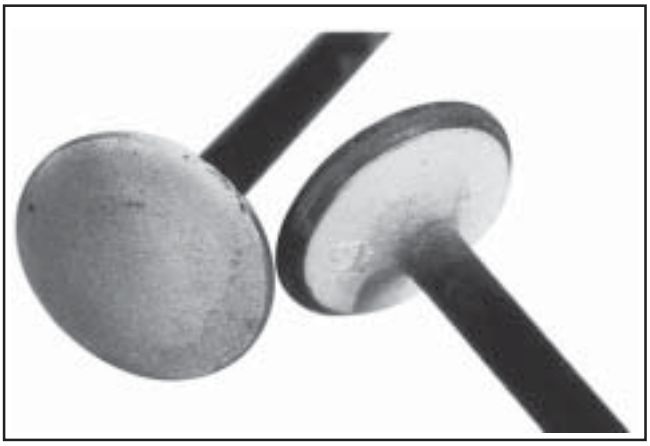

Excessive Combustion Temperatures: The white deposits seen here indicate very high combustion temperatures, usually due to a lean fuel mixture.

Stem Corrosion: Moisture in fuel or from condensation are the most common causes of valve stem corrosion. Condensation occurs from improper preservation during storage and when engine is repeatedly stopped before it has a chance to reach normal operating temperatures. Replace corroded valves.

Gum: Gum deposits usually result from using stale gasoline. Gum is a prevalent cause of valve sticking. The cure is to ream the valve guides and clean or replace the valves, depending on their condition.

Overheating: An exhaust valve subject to overheating will have a dark discoloration in the area above the valve guide. Worn guides and faulty valve springs may cause this condition. Also check for clogged air intake, and blocked fins when this condition is noted.

Valve Guides

If a valve guide is worn beyond specifications, it will not guide the valve in a straight line. This may result in burnt valve faces or seats, loss of compression, and excessive oil consumption.

To check valve guide-to-valve stem clearance, thoroughly clean the valve guide and, using a split-ball gauge, measure the inside diameter of the guide. Then, using an outside micrometer, measure the diameter of the valve stem at several points on the stem where it moves in the valve guide. Use the largest stem diameter to calculate the clearance by subtracting the stem diameter from the guide diameter. If the intake clearance exceeds **0.038/0.076 mm (0.0015/0.0030 in.)** or the exhaust clearance exceeds **0.050/0.088 mm (0.0020/0.0035 in.)**, determine whether the valve stem or guide is responsible for the excessive clearance.

The maximum (I.D.) wear on the intake valve guide is **7.134 mm (0.2809 in.)** while **7.159 mm (0.2819 in.)** is the maximum allowed on the exhaust guide. The guides are not removable but can be reamed **0.25 mm (0.010 in.)** oversize. Valves with 0.25 mm oversize stems must then be used.

If the guides are within limits but the valve stems are worn beyond limits, install new valves.

Valve Seat Inserts

Hardened steel alloy intake and exhaust valve seat inserts are press fitted into the cylinder head. The inserts are not replaceable but can be reconditioned if not too badly pitted or distorted. If cracked or badly warped, the cylinder head should be replaced.

Recondition the valve seat inserts following the instructions provided with the valve seat cutter being used. A typical cutter is shown in Figure 10-7. The final cut should be made with an 89° cutter as specified for the valve seat angle in Figure 10-6. Cutting the proper 45° valve face angle as specified in Figure 10-6, and the proper valve seat angle (44.5°, half of the full 89° angle), will achieve the desired 0.5° (1.0° full cut) interference angle where the maximum pressure occurs on the outside diameters of the valve face and seat.

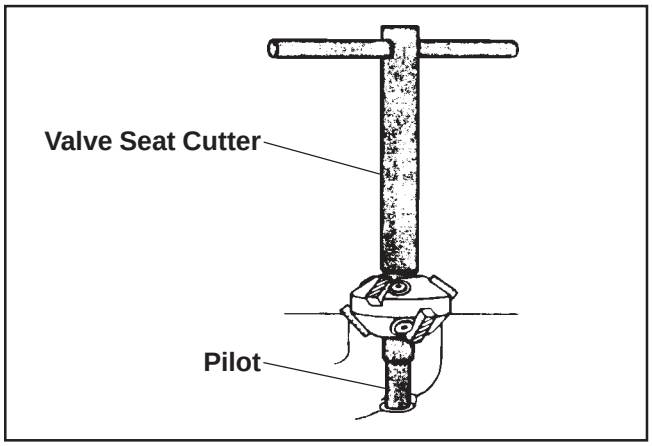

Figure 10-7. Typical Valve Seat Cutter.

Lapping Valves

Reground or new valves must be lapped in, to provide proper fit. Use a hand valve grinder with a suction cup for final lapping. Lightly coat the valve face with a "fine" grade of grinding compound, then rotate the valve on its seat with the grinder. Continue grinding until a smooth surface is obtained on the seat and on the valve face. Thoroughly clean the cylinder head in soap and hot water to remove all traces of grinding compound. After drying the cylinder head, apply a light coating of **SAE 10** oil to prevent rusting.

Intake Valve Stem Seal

These engines use valve stem seals on the intake valves. Always use a new seal when the valves are removed from the cylinder head. The seals should also be replaced if deteriorated or damaged in any way. **Never reuse an old seal.**

Pistons and Rings

Inspection

Scuffing and scoring of pistons and cylinder walls occurs when internal engine temperatures approach the welding point of the piston. Temperatures high enough to do this are created by friction, which is usually attributed to improper lubrication and/or overheating of the engine.

Normally, very little wear takes place in the piston boss-piston pin area. If the original piston and connecting rod can be reused after new rings are installed, the original pin can also be reused but new piston pin retainers are required. The piston pin is included as part of the piston assembly – if the pin boss in the piston or the pin are worn or damaged, a new piston assembly is required.

Ring failure is usually indicated by excessive oil consumption and blue exhaust smoke. When rings fail, oil is allowed to enter the combustion chamber where it is burned along with the fuel. High oil consumption can also occur when the piston ring end gap is incorrect because the ring cannot properly conform to the cylinder wall under this condition. Oil control is also lost when ring gaps are not staggered during installation.

When cylinder temperatures get too high, lacquer and varnish collect on pistons causing rings to stick, which results in rapid wear. A worn ring usually takes on a shiny or bright appearance.

Scratches on rings and pistons are caused by abrasive material such as carbon, dirt, or pieces of hard metal.

Detonation damage occurs when a portion of the fuel charge ignites spontaneously from heat and pressure shortly after ignition. This creates two flame fronts which meet and explode to create extreme hammering pressures on a specific area of the piston. Detonation generally occurs from using low octane fuels.

Preignition or ignition of the fuel charge before the timed spark can cause damage similar to detonation. Preignition damage is often more severe than detonation damage. Preignition is caused by a hot spot in the combustion chamber from sources such as glowing carbon deposits, blocked cooling fins, an improperly seated valve, or wrong spark plug(s).

See Figure 10-8 for some common types of piston and ring damage.

Stuck, Broken Rings

Abrasive Scratched Rings

Overheated or Deteriorated Oil

Scored Piston and Rings

Figure 10-8. Common Types of Piston Damage.

Replacement pistons are available in STD bore size, and in 0.25 mm (0.010 in.), and 0.50 mm (0.020 in.) oversize. Replacement pistons include new piston ring sets and new piston pins.

Replacement ring sets are also available separately for STD, 0.25 mm (0.010 in.), and 0.50 mm (0.020 in.) oversize pistons. Always use new piston rings when installing pistons. Never use old rings.

Some important points to remember when servicing piston rings:

1. The cylinder bore must be deglazed before service ring sets are used.

2. If the cylinder bore does not need reboring and if the old piston is within wear limits and free of score or scuff marks, the old piston may be reused.

3. Remove the old rings and clean up the grooves. **Never reuse old rings.**

4. Before installing the new rings on the piston, place the top two rings, each in turn, in its running area in the cylinder bore and check the end gap. (See Figure 10-9.) Compare the ring gap to the specifications listed in Section 1.

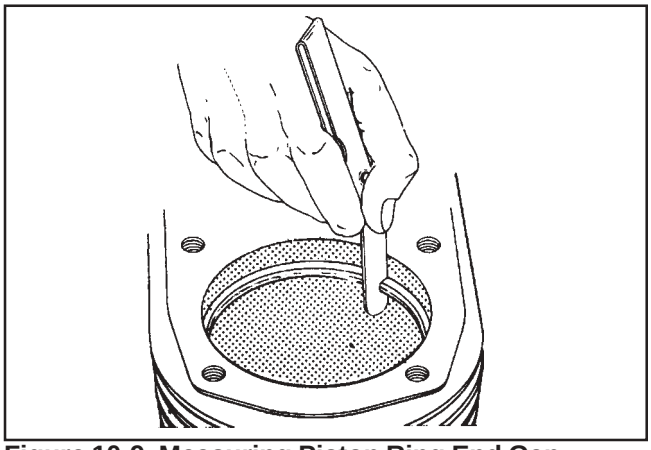

Figure 10-9. Measuring Piston Ring End Gap.

5. After installing the new compression (top and middle) rings on the piston, check the piston-to-ring side clearance. Compare the clearance to specifications listed in Section 1. If the side clearance is greater than specified, a new piston **must** be used. Refer to Figure 10-10.

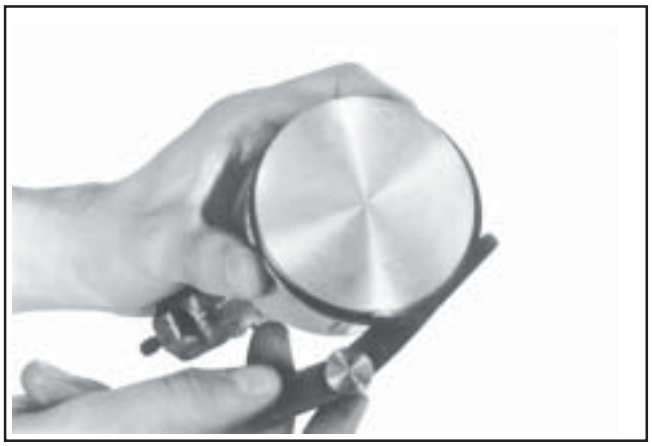

Figure 10-10. Measuring Piston Ring Side Clearance.

Install New Piston Rings

To install new piston rings, proceed as follows:

NOTE: Rings must be installed correctly. Ring installation instructions are usually included with new ring sets. Follow instructions carefully. Use a piston ring expander to install rings (see Figure 10-11). Install the bottom (oil control) ring first and the top compression ring last. Refer to Figure 10-12.

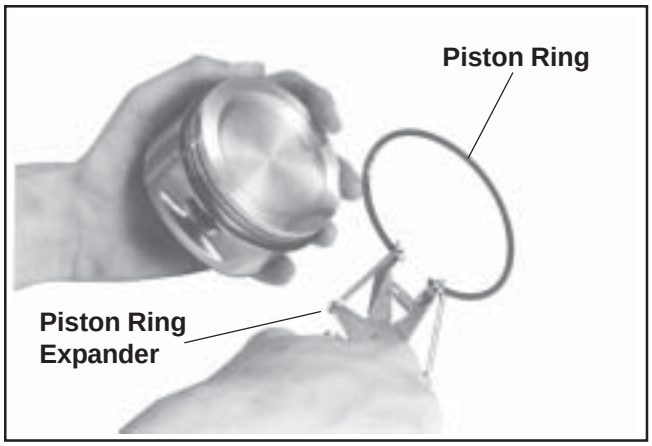

Figure 10-11. Installing Piston Rings.

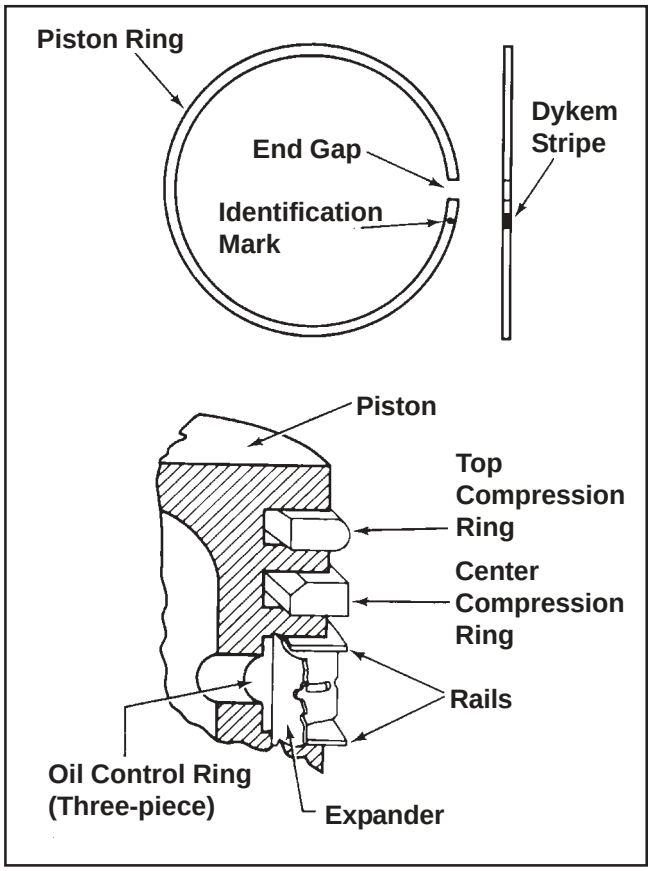

Figure 10-12. Piston Ring Installation.

1. Oil Control Ring (Bottom Groove): Install the expander and then the rails. Make sure the ends of expander are not overlapped.

2. Middle Compression Ring (Center Groove): Install the center ring using a piston ring installation tool. Make sure the "identification" mark is up or the dykem stripe (if contained) is to the left of the end gap.

3. Top Compression Ring (Top Groove): Install the top ring using a piston ring expender. Make sure the "identification" mark is up or the dykem stripe (if contained), to the left of the end gap.

Connecting Rods

Offset, stepped-cap connecting rods are used in all these engines.

Inspection and Service

Check the bearing area (big end) for excessive wear, score marks, running and side clearances (refer to Section 1, "Specifications, Tolerances, and Special Torque Values"). Replace the rod and cap if scored or excessively worn.

Service replacement connecting rods are available in STD crankpin size and **0.25 mm (0.010 in.)** undersize. The **0.25 mm (0.010 in.)** undersized rod can be identified by the drilled hole located in the lower end of the rod shank. Always refer to the appropriate parts information to ensure that correct replacements are used.

Hydraulic Lifters

Inspection

Check the base surface of the hydraulic lifters for wear or damage. If the lifters need to be replaced, apply a liberal coating of Kohler lubricant (see Section 2) to the base of each new lifter before it is installed.

"Bleeding" the Lifters

To prevent a possible bent push rod or broken rocker arm, it is important to "bleed" any excess oil out of the lifters before they are installed.

1. Cut a 50-75 mm (2-3 in.) piece from the end of an old push rod and chuck it in a drill press.

2. Lay a rag or shop towel on the table of the drill press and place the lifter, open end up, on the towel.

3. Lower the chucked push rod until it contacts the plunger in the lifter. Slowly "pump" the plunger two or three times to force the oil out of the feed hole in the side of the lifter.

Closure Plate Assembly

Inspection

Inspect the oil seal in the closure plate and remove it if it is worn or damaged. Refer to ''Install Closure Plate Oil Seal'' in Section 11 for new oil seal installation.

Inspect the main bearing surface for wear or damage (refer to Section 1, "Specifications, Tolerances, and Special Torque Values"). Replace the closure plate assembly if required.

Governor Gear Assembly

Inspection

Inspect the governor gear teeth. Replace the gear if it is worn, chipped, or if any teeth are missing. Inspect the governor weights. They should move freely in the governor gear.

Disassembly

The governor gear **must** be replaced once it is removed from the closure plate.

NOTE: The governor gear is held onto the shaft by small molded tabs in the gear. When the gear is removed from the shaft, these tabs are destroyed and the gear must be replaced. Therefore, remove the gear **only** if absolutely necessary.

1. Remove the regulating pin and governor gear assembly. See Figure 10-13.

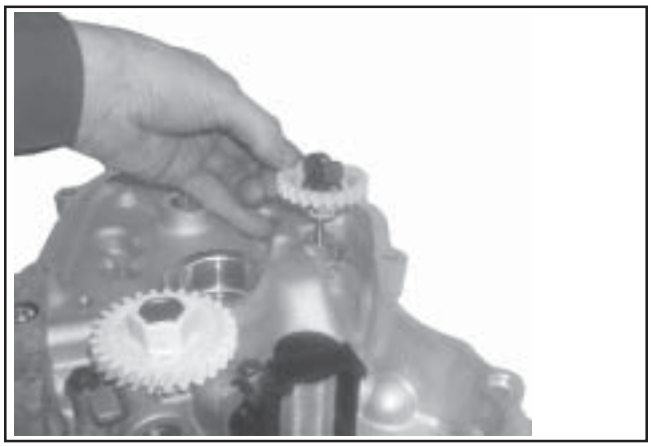

Figure 10-13. Removing Governor Gear.

2. Remove the locking tab thrust washer located under the governor gear assembly.

3. Carefully inspect the governor gear shaft and replace it only if it is damaged. After removing the damaged shaft, press or lightly tap the replacement shaft into the closure plate to the depth shown in Figure 10-14.

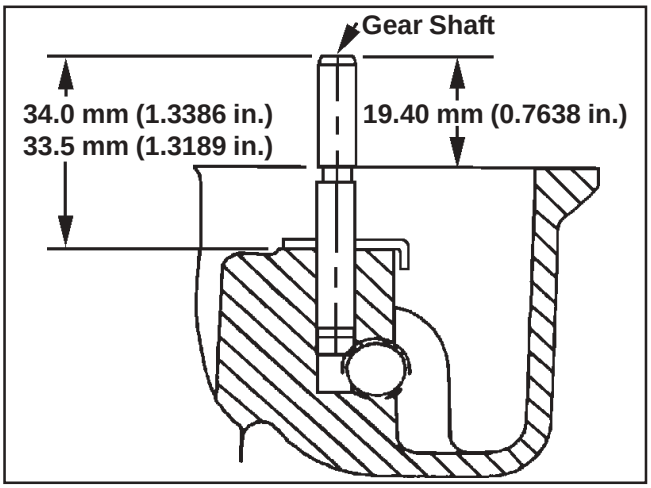

Figure 10-14. Governor Shaft Press Depth.

Reassembly

1. Install the locking tab thrust washer on the governor gear shaft with the tab down.

2. Position the regulating pin within the governor gear/flyweight assembly and slide both onto the governor shaft.

Oil Pump Assembly

Disassembly

1. Remove the two hex flange screws.

2. Remove the oil pump assembly from the closure plate.

3. Remove the oil pump rotor.

4. Remove the oil pickup by unhooking the locking clip, and pulling it free from the oil pump body.

5. If the relief valve is like that shown in Figure 10-15, drive out the pin to remove the oil pressure relief valve piston and spring. Refer to the following inspection and reassembly procedures.

   If the relief valve is a one-piece style, staked to the oil pump housing (See Figure 10-16) removal should not be attempted, nor is internal servicing possible. If a problem with the relief valve is encountered, the oil pump should be replaced.

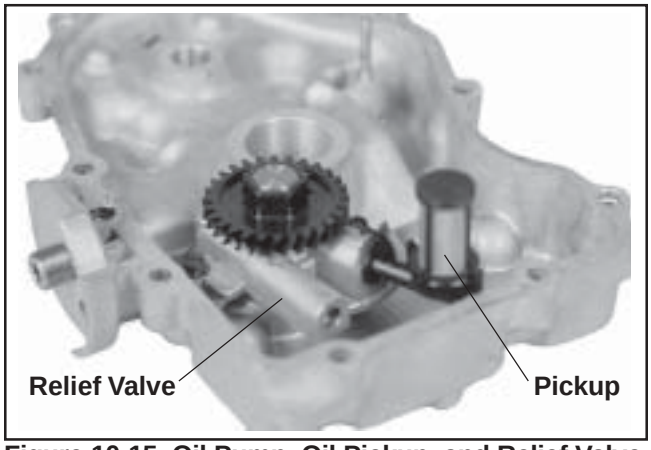

Figure 10-15. Oil Pump, Oil Pickup, and Relief Valve (Original Style).

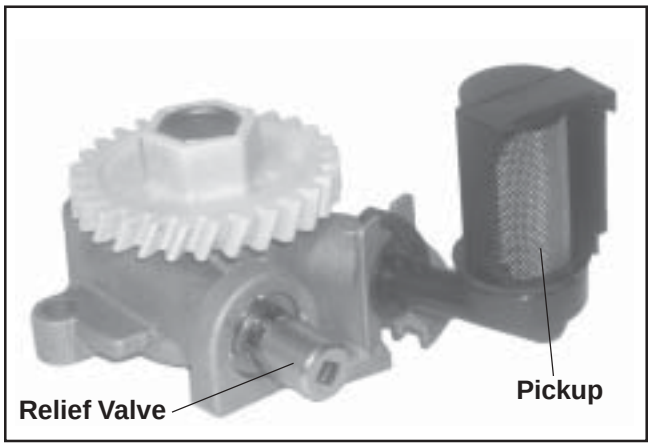

Figure 10-16. Oil Pump, Oil Pickup, and One-Piece Relief Valve (Later Style).

Inspection

Inspect the oil pump housing, gear, and rotors for nicks, burrs, wear, or any visible damage. If any parts are worn or damaged, replace the oil pump.

Inspect the oil pressure relief valve piston. It should be free of nicks or burrs.

Check the spring for wear or distortion. The free length of the spring should be approximately **47.4 mm (1.8 in.)**. Replace the spring if it is distorted or worn. See Figure 10-17.

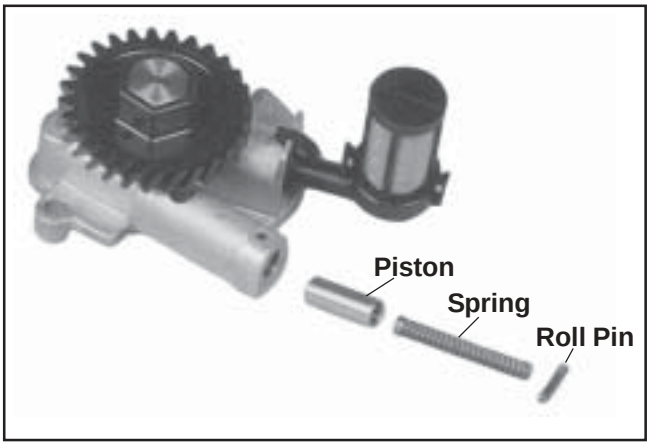

Figure 10-17. Oil Pressure Relief Valve Piston and Spring.

Reassembly

1. Install the pressure relief valve piston and spring.

2. Install the oil pickup to the oil pump body. Lubricate the O-Ring with oil and make sure it remains in the groove as the pickup is being installed.

3. Install the rotor.

4. Install the oil pump body to the closure plate and secure with the two hex flange screws. Torque the hex flange screws as follows:

   a. Install fastener into location No. 1 and lightly tighten to position pump.

   b. Install fastener into location No. 2 and fully torque to the recommended value.

   c. Torque fastener in location No. 1 to the recommended value.

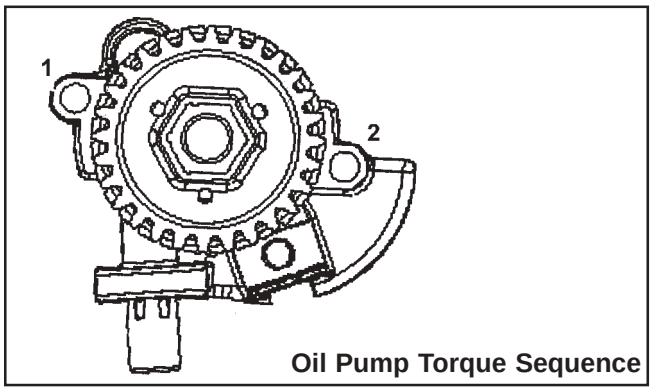

First Time Installation: 10.7 N·m (95 in. lb.)
All Reinstallations: 6.7 N·m (60 in. lb.)

5. After torquing, rotate the gear and check for freedom of movement. Make sure there is no binding. If binding occurs, loosen the screws, reposition the pump, retorque the hex flange screws and recheck the movement.

Section 10
Inspection and Reconditioning

This section covers the operation, inspection, and repair/reconditioning of major internal engine components. The following components are not covered in this section. They are covered in sections of their own:

Air Cleaner, Section 4
Carburetor & External Governor, Section 5
Ignition, Charging & Electric Starter, Section 8

Clean all parts thoroughly. Only clean parts can be accurately inspected and gauged for wear or damage. There are many commercially available cleaners that will quickly remove grease, oil, and grime from engine parts. When such a cleaner is used, follow the manufacturer's instructions and safety precautions carefully. Make sure all traces of the cleaner are removed before the engine is reassembled and placed into operation. Even small amounts of these cleaners can quickly break down the lubricating properties of engine oil.

Use an aerosol gasket remover, paint stripper, or lacquer thinner to remove any old sealant. Apply the solvent, allow time for it to work, and then brush the surface with a **brass** wire brush. After the old sealant is removed, clean the surface with isopropyl alcohol, lacquer thinner, or aerosol electrical contact cleaner. **Do not** scrape the surfaces, as any scratches, nicks, or burrs can result in leaks. See Service Bulletin 252 for further information.

Refer to A Guide to Engine Rebuilding (TP-2150-A) for additional information. Measurement Guide (TP-2159-B) and Engine Inspection Data Record (TP-2435) are also available; use these to record inspection results.

Automatic Compression Release (ACR)

Some engines are equipped with the optional Automatic Compression Release (ACR) mechanism. The ACR lowers compression at cranking speeds to make starting easier.

Operation

The ACR mechanism consists of a flyweight, spring and pivoting control pin assembly attached to the gear on the camshaft. At cranking speeds (700 RPM or lower), the control pin protrudes above the exhaust cam lobe. This pushes the exhaust valve off its seat during the first part of the compression stroke. The reduced compression results in an effective compression ratio of about 2:1 during cranking.

After starting, engine speed increases to over 700 RPM, and centrifugal force overcomes the force of the flyweight spring. The flyweight moves outward, pulling the arm of the control pin, so it pivots into the ''run'' position. The control pin no longer has any effect on the exhaust valve and the engine operates at full power.

When the engine is stopped, the spring returns the flyweight lever and control pin assembly to the compression release position ready for the next start.

Camshaft

Inspection and Service

Check the lobes of the camshaft for wear or damage. See Section 1 for minimum lift specifications. Inspect the cam gear for badly worn, chipped or missing teeth. Replacement of the camshaft will be necessary if any of these conditions exist.

Crankshaft

Inspection and Service

Inspect the gear teeth of the crankshaft. If the teeth are badly worn, chipped, or some are missing, replacement of the crankshaft will be necessary.

Governor Cross Shaft Oil Seal

If the governor cross shaft seal is damaged and/or leaks, replace it using the following procedure.

Remove the oil seal from the crankcase and replace it with a new one. Install the new seal to the depth shown in Figure 10-18 using a seal installer.

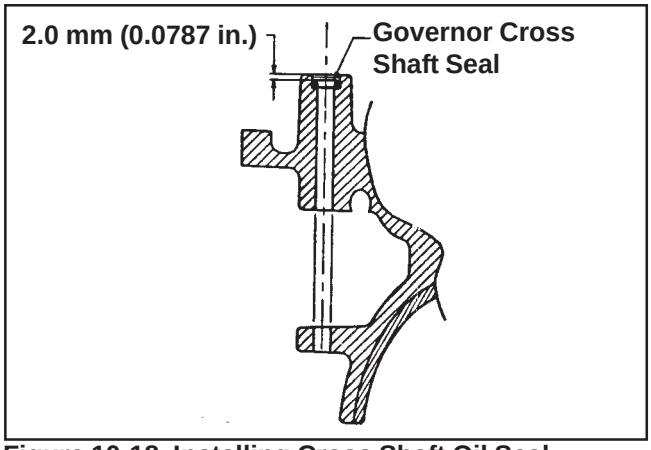

Figure 10-18. Installing Cross Shaft Oil Seal.

Section 11
Reassembly

General

NOTE: Make sure the engine is assembled using all specified torque values, tightening sequences and clearances. Failure to observe specifications could cause severe engine wear or damage. Always use new gaskets. Apply a small amount of oil to the threads of critical fasteners before assembly, unless a Sealant or Loctite® is specified or preapplied.

Make sure all traces of any cleaner are removed before the engine is assembled and placed into operation. Even small amounts of these cleaners can quickly break down the lubricating properties of engine oil.

Check the closure plate, crankcase, cylinder heads, and valve covers to be certain that all old sealing material has been removed. Use gasket remover, lacquer thinner, or paint remover to remove any remaining traces. Clean the surfaces with isopropyl alcohol, acetone, lacquer thinner, or electrical contact cleaner.

Typical Reassembly Sequence

The following sequence is suggested for complete engine reassembly. This procedure assumes that all components are new or have been reconditioned, and all component subassembly work has been completed. The sequence may vary to accommodate options or special equipment. Detailed procedures follow:

1. Install flywheel end oil seal.
2. Install governor cross shaft.
3. Install crankshaft.
4. Install connecting rods with pistons and rings.
5. Install camshaft.
6. Install closure plate assembly.
7. Install stator and backing plates.
8. Install flywheel.
9. Install fan and grass screen.
10. Install hydraulic lifters.
11. Install cylinder heads.
12. Install push rods and rocker arms.
13. Install ignition modules.
14. Install intake manifold.
15. Install breather cover and inner baffles.
16. Install blower housing and outer baffles.
17. Install electric starter motor.
18. Install fuel pump.
19. Install carburetor.
20. Install external governor controls.
21. Install throttle and choke controls.
22. Install Oil Sentry™.
23. Install control panel (if so equipped).
24. Install valve covers.
25. Install air cleaner assembly (see Section 4).
26. Install muffler.
27. Install oil filter and fill crankcase with oil.
28. Connect spark plug leads.

Install Flywheel End Oil Seal

1. Make sure that the seal bore of the crankcase is clean and free of any nicks or burrs. See Figure 11-1.

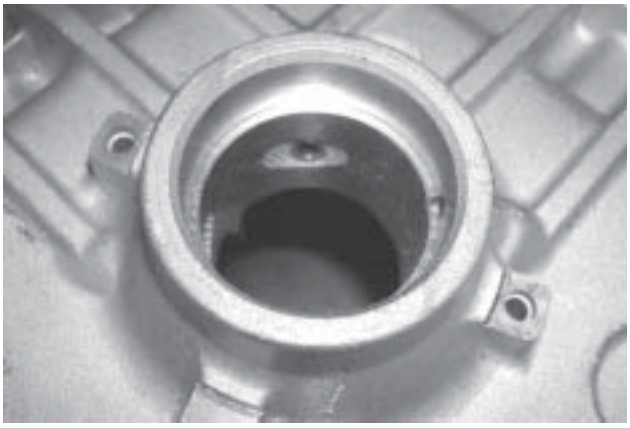

Figure 11-1. Seal Bore of Crankcase.

2. Apply a light coat of clean engine oil to the outside diameter of the oil seal.

3. Drive the oil seal into the crankcase using a seal driver. Make sure the oil seal is installed straight and true in the bore and that the tool bottoms against the crankcase. See Figure 11-2.

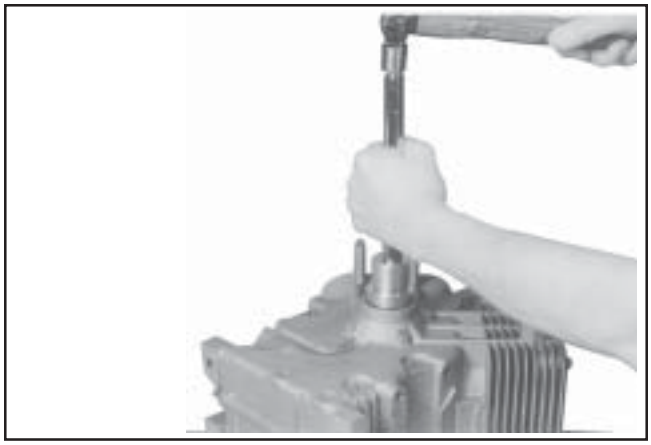

Figure 11-2. Installing Oil Seal.

Install Governor Cross Shaft

1. Lubricate the governor cross shaft bearing surfaces in the crankcase with engine oil.

2. Slide the small lower washer onto the governor cross shaft and install the cross shaft from the inside of the crankcase.

3. **6 mm Governor Shaft:** Install the plain washer and then insert the hitch pin into the smaller, lower hole of the governor cross shaft. See Figures 11-3 and 11-4.

   8 mm Governor Shaft: Install the nylon washer onto the governor cross shaft, then start the push-on retaining ring. Hold the cross shaft up in position, place a 0.50 mm (0.020 in.) feeler gauge on top of the nylon washer, and push the retaining ring down the shaft to secure. Remove the feeler gauge, which will have established the proper end play. See Figures 11-5 and 11-6.

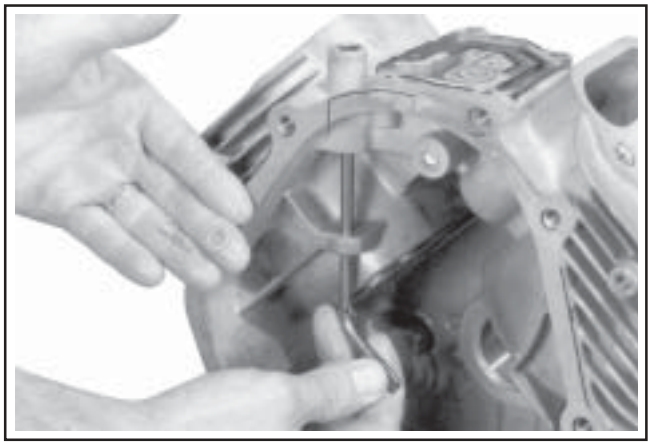

Figure 11-3. Installing 6 mm Governor Cross Shaft.

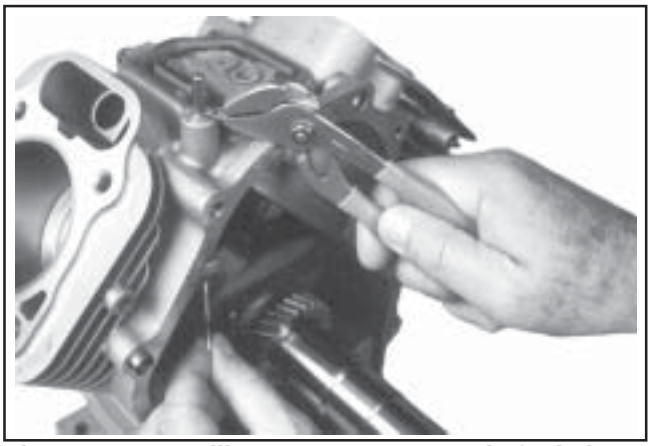

Figure 11-4. Installing Governor Cross Shaft Hitch Pin (6 mm Shaft).

Figure 11-5. Installing 8 mm Governor Cross Shaft.

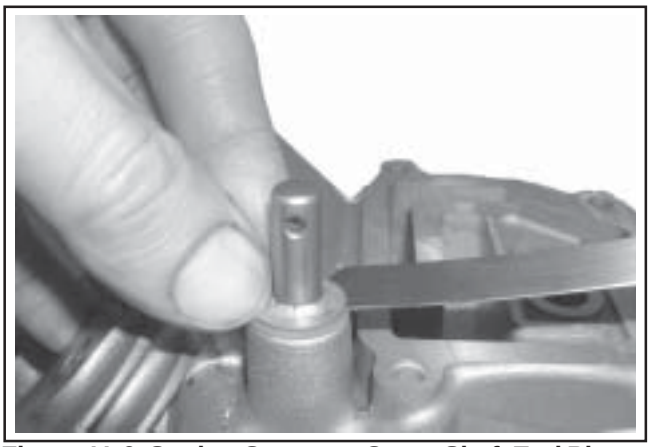

Figure 11-6. Setting Governor Cross Shaft End Play (8 mm Shaft).

Install Crankshaft

1. Carefully slide the flywheel end of the crankshaft through the main bearing in the crankcase. See Figure 11-7.

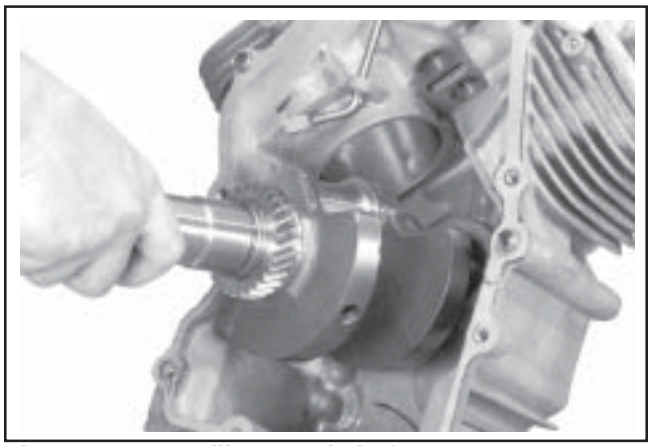

Figure 11-7. Installing Crankshaft.

Install Connecting Rods with Pistons and Rings

NOTE: The cylinders are numbered on the crankcase. Make sure to install the piston, connecting rod and end cap into its appropriate cylinder bore as previously marked at disassembly. **Do not** mix the end caps and connecting rods.

NOTE: Proper orientation of the piston/connecting rod assemblies inside the engine is extremely important. Improper orientation can cause extensive wear or damage. Be certain the pistons and connecting rods are assembled exactly as shown in Figure 11-8.

1. Stagger the piston rings in the grooves until the end gaps are 120° apart. The oil ring rails should also be staggered.

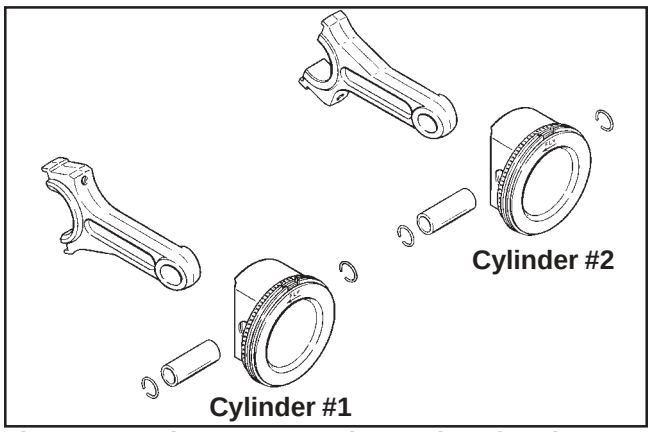

Figure 11-8. Piston, Connecting Rod, and End Cap Detail.

2. Lubricate the cylinder bore, piston, and piston rings with engine oil. Compress the rings of the #1 piston using a piston ring compressor.

3. Lubricate the crankshaft journals and connecting rod bearing surfaces with engine oil.

4. Make sure the "Fly" stamping on piston is facing towards the flywheel side of the engine. Use a hammer with a rubber grip and gently tap the piston into the cylinder as shown in Figure 11-9. Be careful that the oil ring rails do not spring free between the bottom of the ring compressor and top of the cylinder.

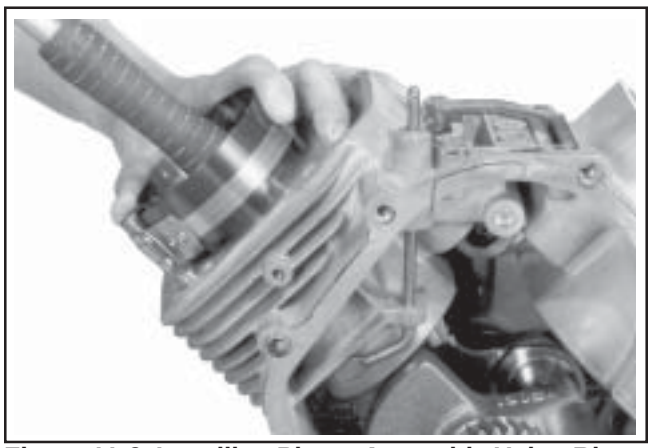

Figure 11-9. Installing Piston Assembly Using Ring Compressor Tool.

5. Install the inner rod cap to the connecting rod using the two hex flange screws. Three different types of connecting rod bolts have been used and each has a different torque value. If 8 mm straight shank type bolts are used, torque in increments to **22.7 N·m (200 in. lb.)**. If 8 mm step-down bolts are used, torque in increments to **14.7 N·m (130 in. lb.)**. If 6 mm straight shank bolts are used, torque in increments to **11.3 N·m (100 in. lb.)**. Illustrated instructions are provided in the service rod package. See Figures 11-10 and 11-11.

   NOTE: Align the chamfer of the connecting rod with the chamfer of its mating end cap. When installed, the flat faces of the connecting rods should face each other. The faces with the raised rib should be toward the outside.

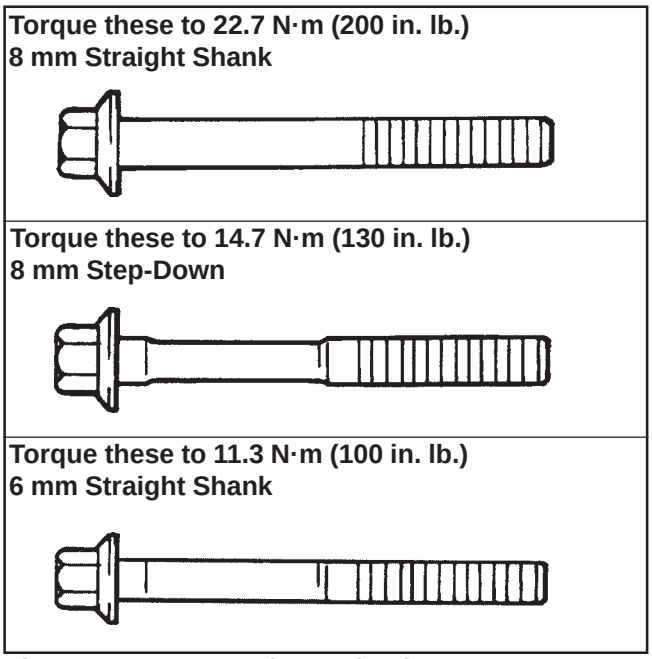

Figure 11-10. Connecting Rod Bolts.

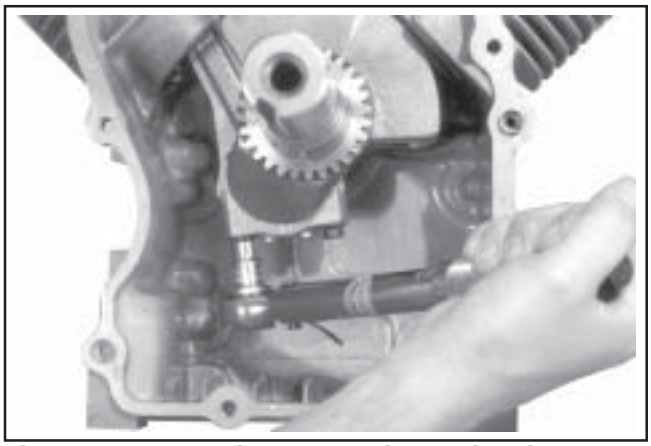

Figure 11-11. Torquing Connecting Rod End Cap.

6. Repeat the above procedure for the other connecting rod and piston assembly.

Install Camshaft

1. Liberally apply camshaft lubricant (see Section 2) to each of the cam lobes. Lubricate the camshaft bearing surfaces of the crankcase and the camshaft with engine oil. See Figure 11-12.

Figure 11-12. Apply Camshaft Lubricant to Cam Lobes.

2. Position the timing mark of the crankshaft gear at the 12 o'clock position.

3. Turn the governor cross shaft clockwise until the lower end of the shaft contacts the cylinder. Make sure the cross shaft remains in this position while installing the camshaft. See Figure 11-13.

4. Slide the camshaft into the bearing surface of the crankcase, positioning the timing mark of the camshaft gear at the 6 o'clock position. Make sure that the camshaft gear and crankshaft gear mesh, with both timing marks aligned. See Figure 11-13.

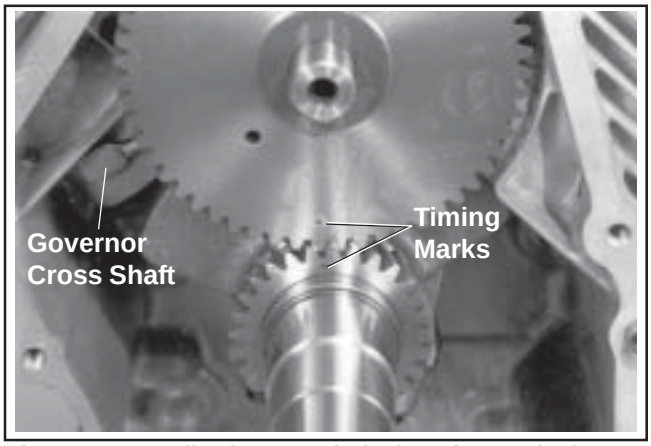

Figure 11-13. Aligning Crankshaft and Camshaft Timing Marks.

Determining Camshaft End Play

1. Install the shim removed during disassembly onto the camshaft.

2. Position the camshaft end play checking tool on the camshaft. See Figure 11-14.

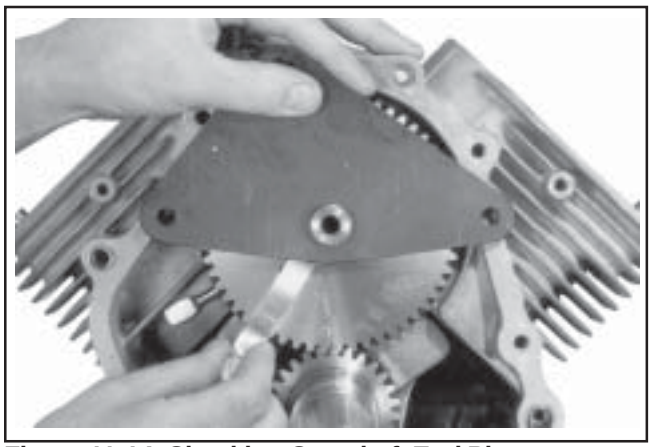

Figure 11-14. Checking Camshaft End Play.

3. Apply pressure on the camshaft end play checking tool (pushing camshaft toward crankshaft). Use a feeler gauge to measure the camshaft end play between the shim spacer and the checking tool. Camshaft end play should be **0.076/0.127 mm (0.003/0.005 in.)**.

4. If the camshaft end play is not within the specified range, remove the checking tool and replace the shim as necessary.

Several color coded shims are available:

White: 0.69215/0.73025 mm (0.02725/0.02875 in.)
Blue: 0.74295/0.78105 mm (0.02925/0.03075 in.)
Red: 0.79375/0.83185 mm (0.03125/0.03275 in.)
Yellow: 0.84455/0.88265 mm (0.03325/0.03475 in.)
Green: 0.89535/0.99345 mm (0.03525/0.03675 in.)
Gray: 0.94615/0.98425 mm (0.03725/0.03875 in.)
Black: 0.99695/1.03505 mm (0.03925/0.04075 in.)

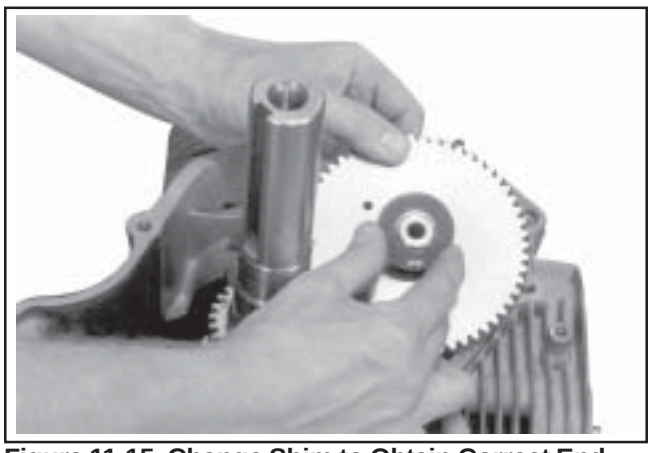

Figure 11-15. Change Shim to Obtain Correct End Play.

5. Reinstall the end play checking tool and recheck the end play.

Oil Pump Assembly

The oil pump is mounted inside the closure plate. If service was required, and the oil pump was removed, refer to the assembly procedures under "Oil Pump Assembly" in Section 10.

Governor Gear Assembly

The governor gear assembly is located inside the closure plate. If service was required, and the governor was removed, refer to the assembly procedures under "Governor Gear Assembly" in Section 10.

Thrust Bearing, Washer and Shim

Some specifications use a needle type thrust bearing, thrust washer and shim spacer to control the end play of the crankshaft. See Figure 11-16. If these items are noted during disassembly, make sure they are reinstalled in the sequence shown in Figure 11-17. A different procedure will have to be followed to check and adjust crankshaft end play on these models.

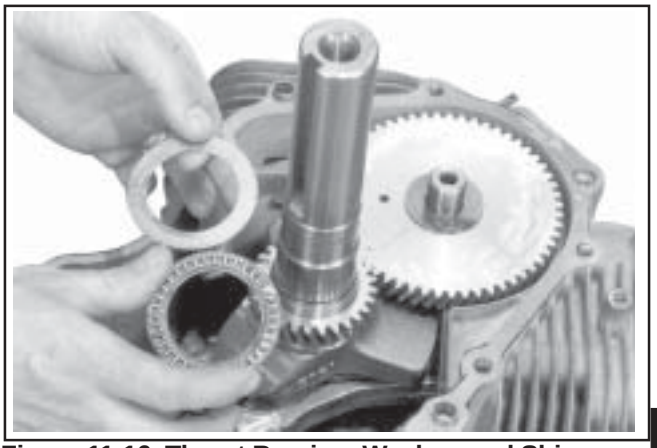

Figure 11-16. Thrust Bearing, Washer, and Shim Used on Some Models.

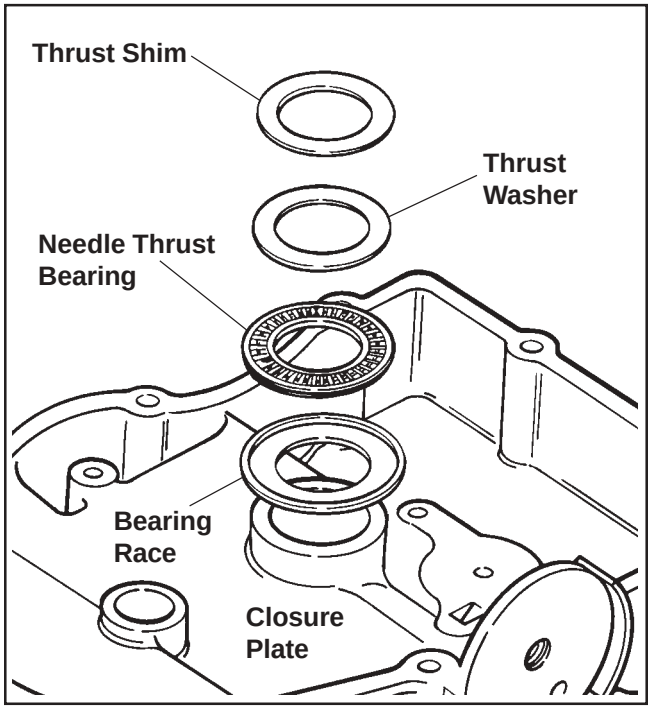

Figure 11-17. Correct Sequence of Thrust Bearing, Washer, and Shim in Closure Plate.

The race for the thrust bearing presses loosely into the closure plate. If it is not already installed, push it into the crankshaft bore inside the closure plate. Pack the thrust bearing with heavy grease and stick the bearing into the race. Wipe some grease on the face of the thrust washer and stick it onto the thrust bearing. Wipe some grease on the face of the original shim spacer and stick it onto the thrust washer.

Install the closure plate onto the crankcase **without** applying RTV sealant and secure it with only two or three of the fasteners at this time. Use a dial indicator to check the crankshaft end play. End play should be 0.05/0.50 mm (0.0020/0.0197 in.), except for CH25 engines below Serial No. 2403500008 end play should be 0.050/0.75 mm (0.0020/0.0295 in.). Shim spacers are available in the three color coded thicknesses listed below if adjustment is needed.

Crankshaft End Play Shims

GREEN	0.8366-0.9127 mm (0.8750 mm/0.034 in. Nominal)
YELLOW	1.0652-1.1414 mm (1.1033 mm/0.043 in. Nominal)
RED	1.2938-1.3700 mm (1.3319 mm/0.052 in. Nominal)

Remove the closure plate. If end play requires adjustment, remove the original spacer and install the appropriate size shim spacer in its place. Then follow the procedure under "Install Closure Plate Assembly."

Install Closure Plate Oil Seal

1. Check to make sure that there are no nicks or burrs in the crankshaft bore of the closure plate.

2. Apply a light coat of engine oil to the outside diameter of the oil seal.

3. Drive the oil seal into the closure plate using a seal driver. Make sure the oil seal is installed straight and true in the bore to the depth shown in Figure 11-18.

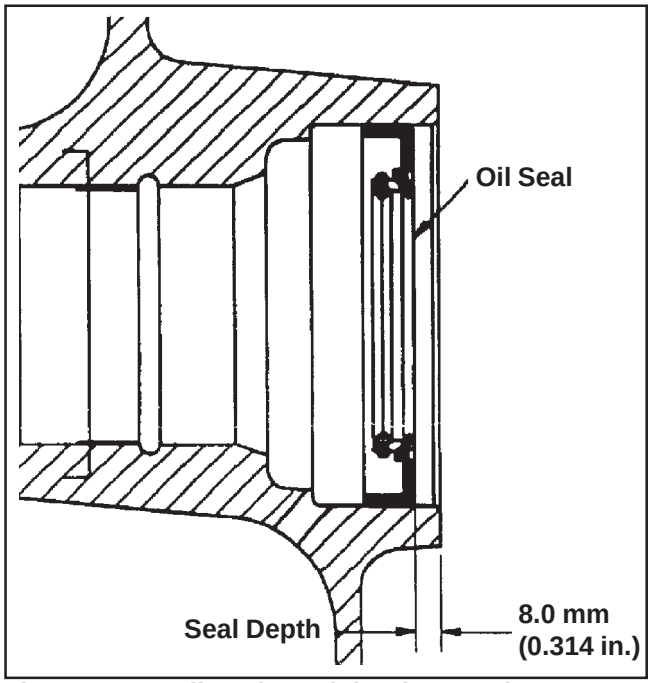

Figure 11-18. Oil Seal Depth in Closure Plate.

Install Closure Plate Assembly

RTV sealant is used as a gasket between the closure plate and the crankcase. Refer to Section 2 for a listing of approved sealants. Always use fresh sealant. Using outdated sealant can result in leakage.

1. Be sure the sealing surfaces have been cleaned and prepared as described at the beginning of Section 10 or in Service Bulletin 252.

2. Check to make sure that there are no nicks or burrs on the sealing surfaces of the closure plate or crankcase.

3. Apply a 1.5 mm (1/16 in.) bead of sealant to the sealing surface of the closure plate. See Figure 11-19 for sealant pattern.

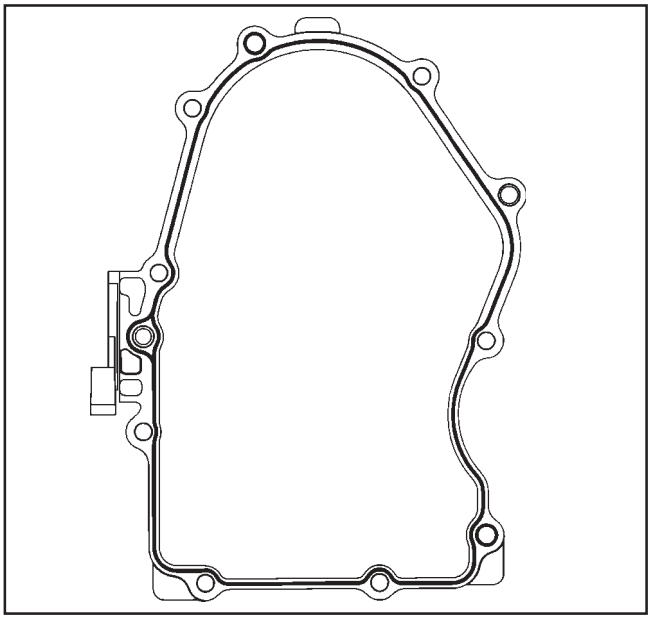

Figure 11-19. Closure Plate Sealant Pattern.

4. Make sure the end of the governor cross shaft is lying against the bottom of cylinder 1 inside the crankcase. See Figure 11-13.

5. Install the closure plate to the crankcase. Carefully seat the camshaft and the crankshaft into their mating bearings. Rotate the crankshaft slightly to help engage the oil pump and governor gear meshes. See Figure 11-20.

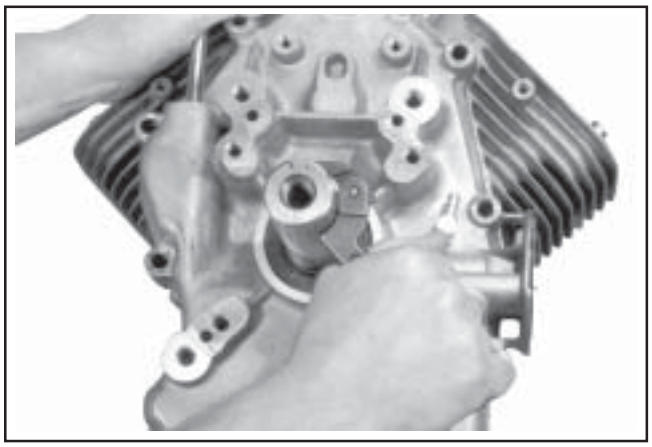

Figure 11-20. Using Spanner Wrench to Turn Crankshaft.

6. Install the ten hex flange screws securing the closure plate to the crankcase. Torque fasteners in the sequence shown in Figure 11-21 to **24.4 N·m (216 in. lb.)**. On some engines one of the ten mounting screws is plated. The plated screw is typically installed in the #6 hole shown in Figure 11-21.

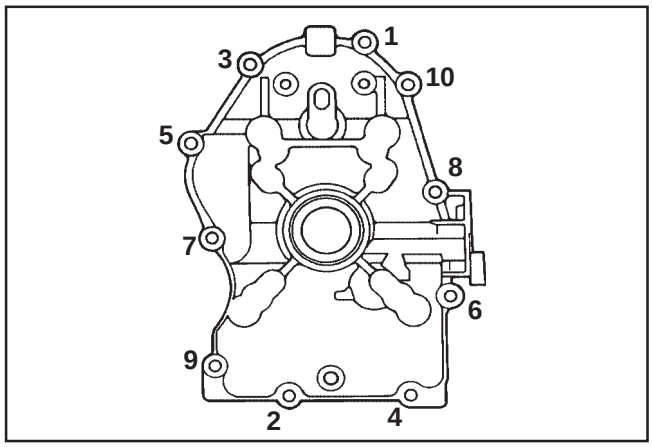

Figure 11-21. Closure Plate Fastener Torque Sequence.

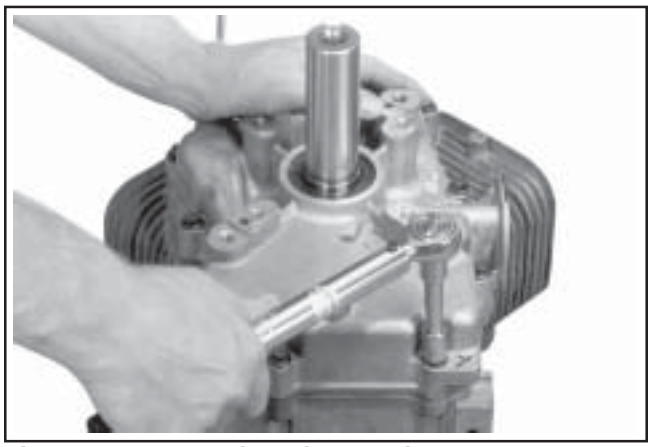

Figure 11-22. Torquing Closure Plate Fasteners.

Install Stator and Backing Plates

1. Apply pipe sealant with Teflon® (Loctite® No 59241 or equivalent) to the stator mounting holes.

2. Position the stator aligning the mounting holes so that the leads are at the bottom, towards the crankcase.

3. Install and torque the two hex flange screws to **6.2 N·m (55 in. lb.)**. See Figure 11-23.

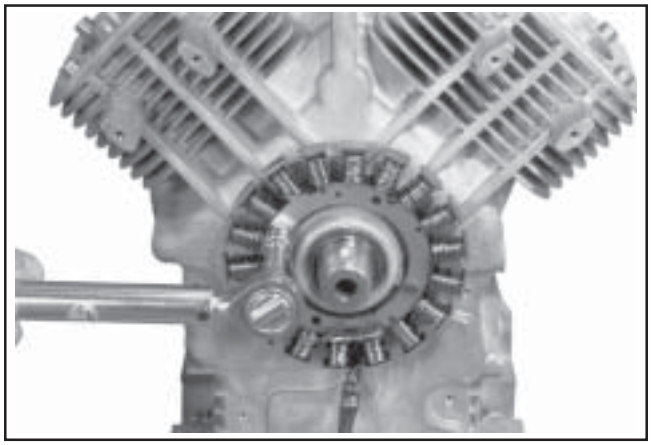

Figure 11-23. Torquing Stator Screws.

4. Route the stator leads in the crankcase channel, then install the backing plates and the stator wire bracket (if used). Secure using the four hex flange screws. See Figures 11-24 and 11-25. Torque the screws to **7.3 N·m (65 in. lb.)**.

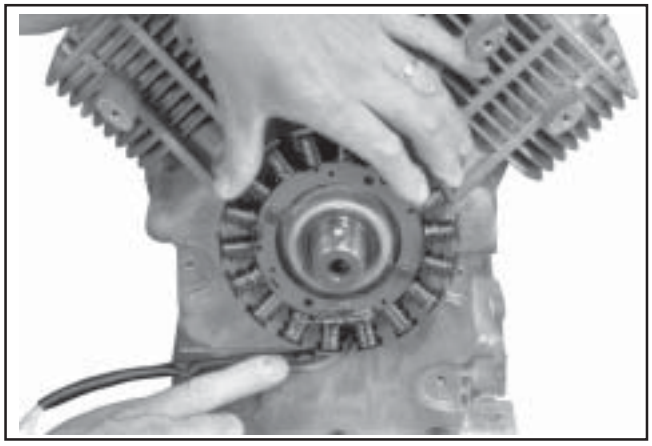

Figure 11-24. Route Stator Leads in Groove.

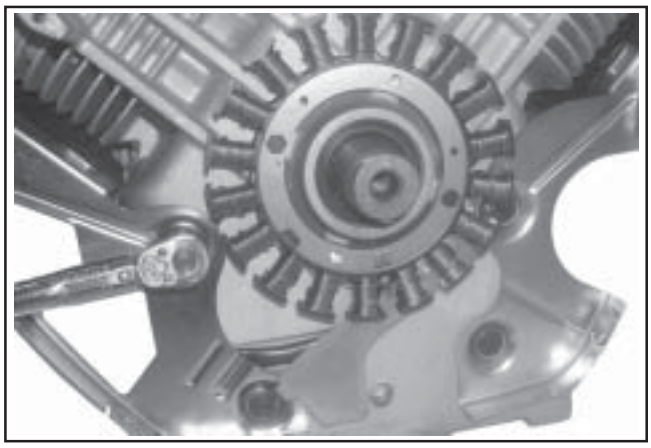

Figure 11-25. Installing Backing Plates and Stator Wire Bracket.

Install Flywheel

WARNING: Damaging Crankshaft and Flywheel Can Cause Personal Injury!

Using improper procedures to install the flywheel can crack or damage the crankshaft and/or flywheel. This not only causes extensive engine damage, but can also cause personal injury, since broken fragments could be thrown from the engine. Always observe and use the following precautions and procedures when installing the flywheel.

NOTE: Before installing the flywheel make sure the crankshaft taper and the flywheel hub are clean, dry, and completely free of any lubricants. The presence of lubricants can cause the flywheel to be over stressed and damaged when the hex flange screw is torqued to specifications.

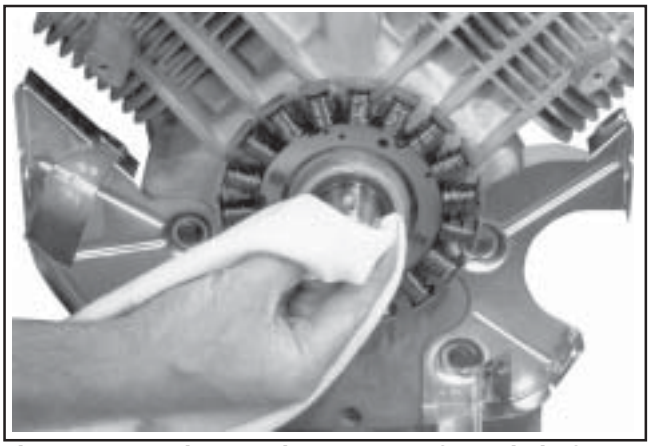

Figure 11-26. Clean and Dry Taper of Crankshaft.

Figure 11-27. Clean and Dry Flywheel Hub.

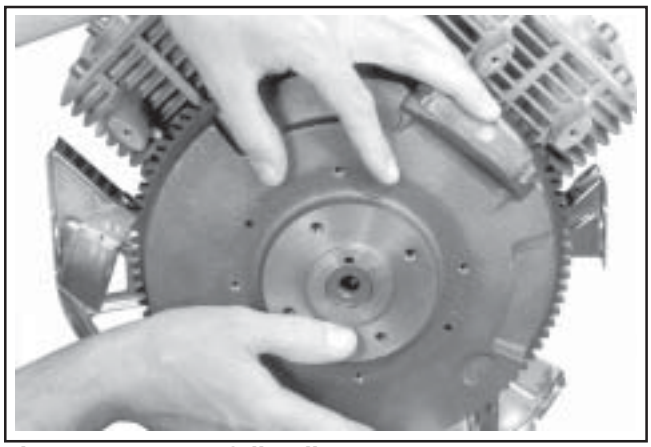

Figure 11-28. Carefully Align Keyway to Key.

NOTE: Make sure the flywheel key is installed properly in the keyway. The flywheel can become cracked or damaged if the key is not properly installed.

1. Install the woodruff key into the keyway of the crankshaft. Make sure that the key is properly seated and parallel with the shaft taper.

2. Install the flywheel onto the crankshaft being careful not to shift the woodruff key. See Figure 11-28.

3. Install the hex flange screw and washer.

4. Use a flywheel strap wrench or holding tool to hold the flywheel. Torque the hex flange screw securing the flywheel to the crankshaft to **66.4 N·m (49 ft. lb.)**. See Figure 11-29.

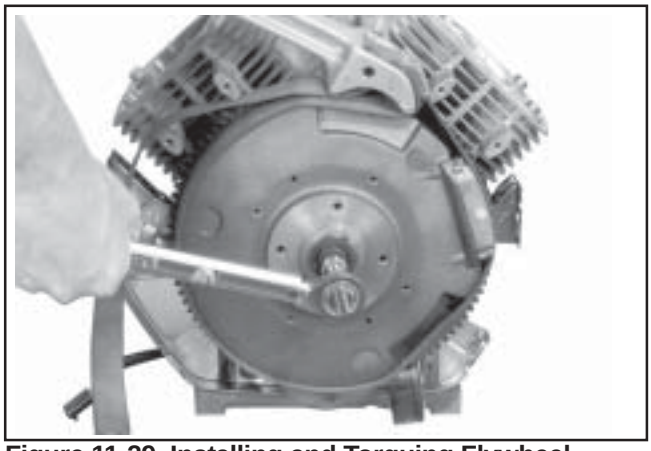

Figure 11-29. Installing and Torquing Flywheel Fastener.

Install Flywheel Fan

1. Install the fan onto the flywheel using the four hex flange screws.

   NOTE: Position the ears located at rear perimeter of the fan in the recesses of the flywheel. See Figure 11-30.

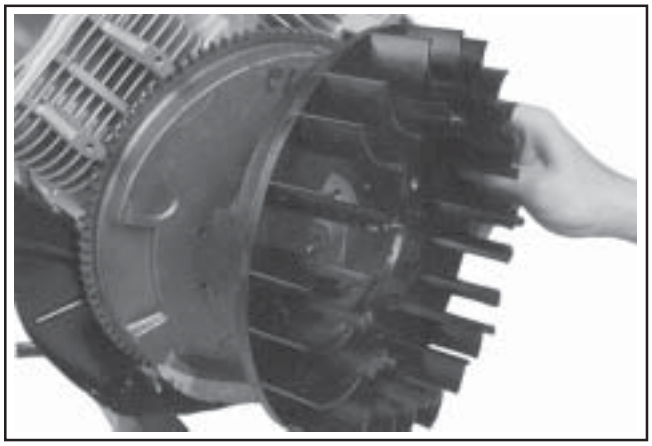

Figure 11-30. Installing Fan on Flywheel.

2. Torque the screws to **9.9 N·m (88 in. lb.)**.

Install Plastic Grass Screen

1. If the engine has a plastic grass screen, snap the screen onto the fan. See Figure 11-31. Due to the possibility of damaging the posts during removal, install the retainers on different posts from which they were removed. Start the retainers by hand, then push them down with a 13 mm (1/2") socket until they lock. If the engine has a metal screen, it will be installed later.

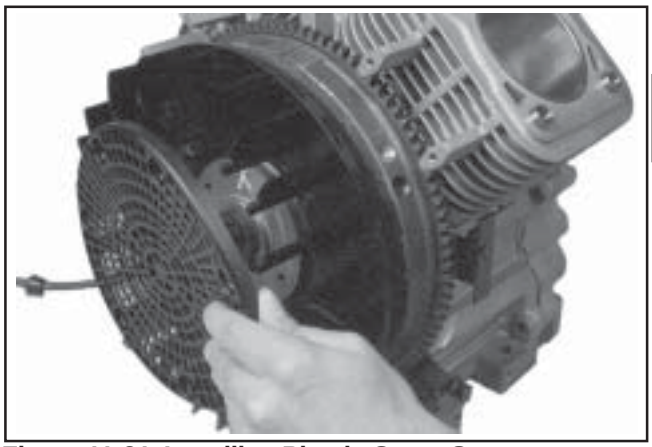

Figure 11-31. Installing Plastic Grass Screen.

Install Supports for the Metal Grass Screen

1. If a metal grass screen is used, with threaded individual supports, install a spacer washer on the external threads. Apply blue Loctite® No. 242 (removable) onto the threads. Install the four supports as shown in Figure 11-32.

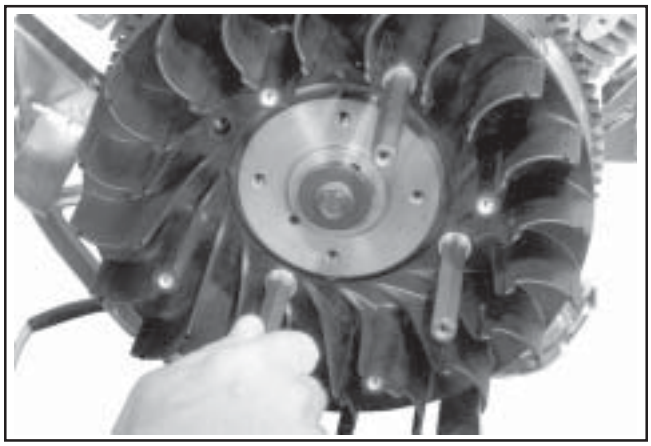

Figure 11-32. Installing Supports for Metal Grass Screen.

2. Tighten the supports with a torque wrench to **9.9 N·m (88 in. lb.)**. See Figure 11-33. The grass screen will be installed to the supports after the blower housing is in place.

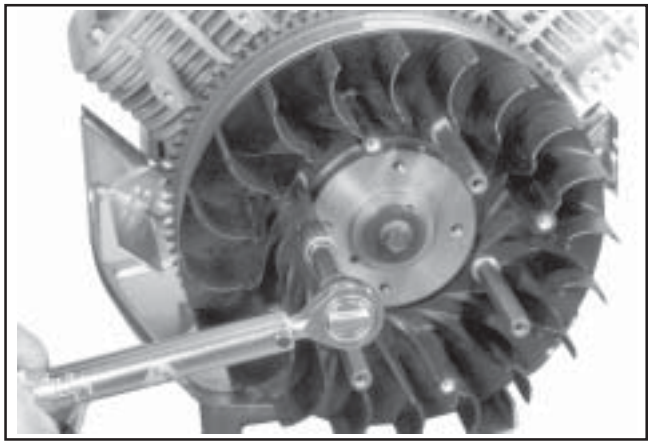

Figure 11-33. Torquing Supports for Metal Screen (Some Models).

Install Hydraulic Lifters

1. See ''Servicing Hydraulic Lifters'' in Section 10 for lifter preparation (bleed down) procedures.

2. Apply camshaft lubricant (see Section 2) to the bottom surface of each lifter. See Figure 11-34. Lubricate the hydraulic lifters and the lifter bores in the crankcase with engine oil.

Figure 11-34. Applying Camshaft Lubricant to Bottom of Lifters.

3. Note the mark or tag identifying the hydraulic lifters as either intake or exhaust and cylinder 1 or cylinder 2. Install the hydraulic lifters into their appropriate location in the crankcase. **Do not** use a magnet. See Figure 11-35.

   NOTE: Hydraulic lifters should always be installed in the same position as before disassembly. The exhaust lifters are located on the output shaft side of the engine while the intake lifters are located on the fan side of the engine. The cylinder numbers are embossed on the top of the crankcase and each cylinder head. See Figure 11-36.

Figure 11-35. Installing Hydraulic Lifters.

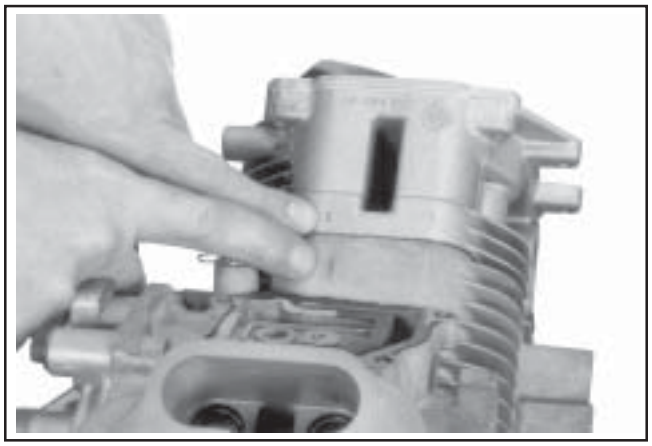

Figure 11-36. Match Numbers on Cylinder Barrel and Head.

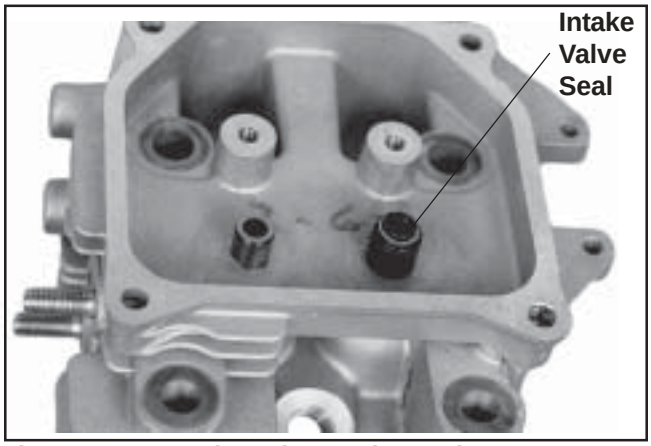

Figure 11-37. Intake Valve Seal Location.

Valve Stem Seals

These engines use valve stem seals on the intake valves and occasionally on the exhaust valves. Always use a new seal whenever the valve is removed or if the seal is deteriorated or damaged in any way. Never reuse an old seal. Figure 11-37.

Assemble Cylinder Heads

Prior to installation, lubricate all components with engine oil, paying particular attention to the lip of the valve stem seal, valve stems and valve guides. Install the following items in the order listed below using a valve spring compressor. See Figures 11-38 and 11-39.

- Intake and exhaust valves
- Valve spring caps
- Valve springs
- Valve spring retainers
- Valve spring keepers

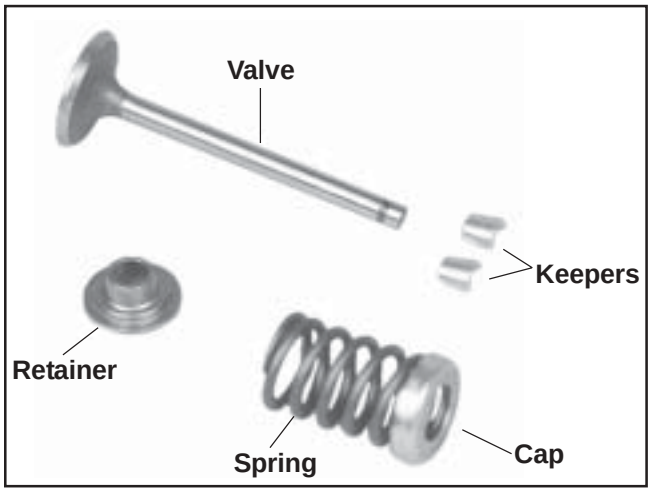

Figure 11-38. Valve Components.

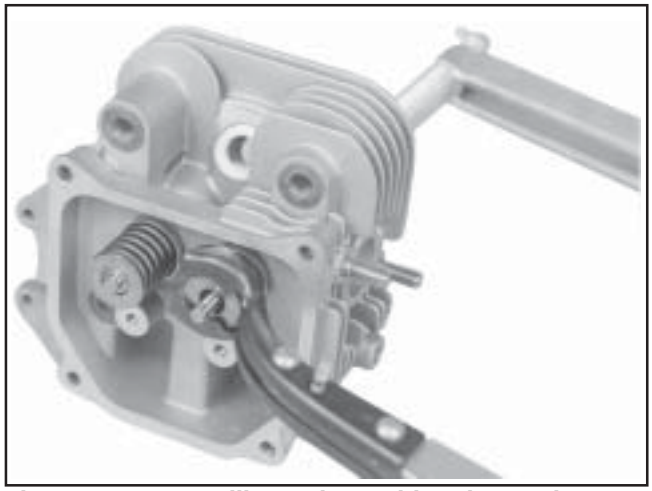

Figure 11-39. Installing Valves with Valve Spring Compressor.

Install Cylinder Heads

NOTE: Cylinder heads must be attached with the original type of mounting hardware, using either hex flange screws, or mounting studs with nuts and washers. The heads are machined differently for studs than for screws, so the fastening method cannot be altered unless the heads are being replaced. Do not intermix the components.

1. Check to make sure there are no nicks or burrs on the sealing surfaces of the cylinder head or the crankcase.

Heads secured with hex flange screws:

2. Install a new cylinder head gasket, (with printing up).

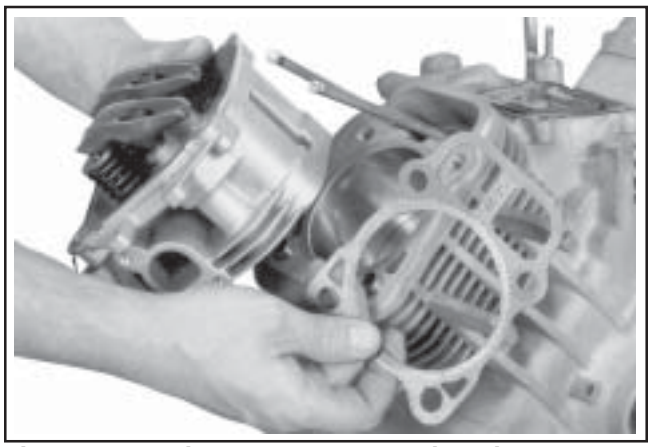

Figure 11-40. Always Use New Head Gaskets.

NOTE: Match the numbers embossed on the cylinder heads and crankcase. See Figure 11-36.

3. Install the cylinder head and start the four **new** hex flange screws.

NOTE: When installing cylinder heads, **new** hex flange screws should always be used.

4. Torque the hex flange screws in two stages; first to **22.6 N·m (200 in. lb.)**, finally to **41.8 N·m (370 in. lb.)**, following the sequence in Figure 11-42.

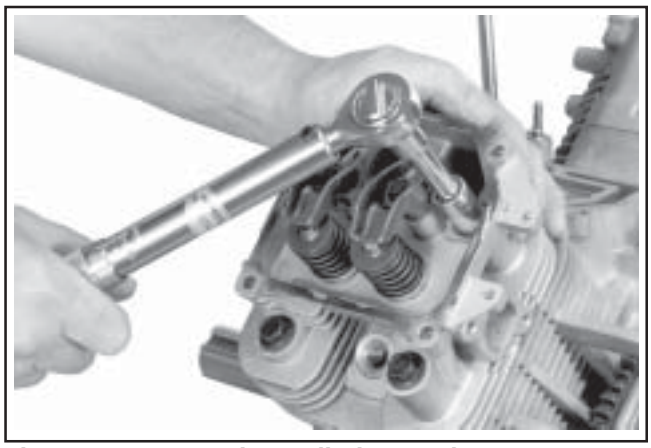

Figure 11-41. Torquing Cylinder Head Fasteners.

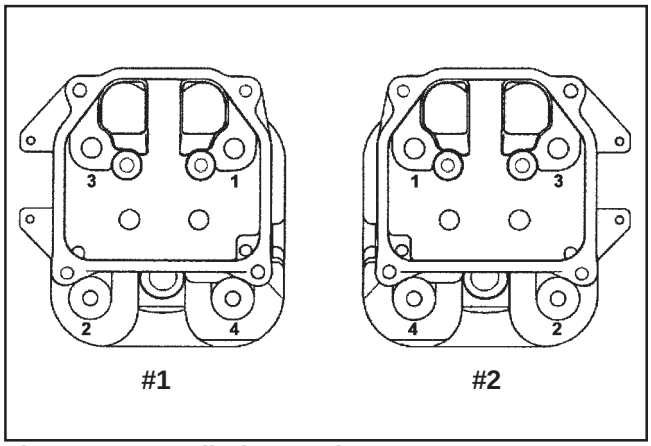

Figure 11-42. Cylinder Head Fastener Torque Sequence.

Heads secured with mounting studs, nuts, and washers:

1. If all of the studs were left intact, go to Step 6. If any studs were disturbed or removed, install new studs as described in Step 3. Do not use/reinstall any loosened or removed studs.

2. Install new mounting stud(s) into the crankcase.

   a. Thread and lock two of the mounting nuts together on the smaller diameter threads.

   b. Thread the opposite end of the stud with the preapplied locking compound into the crankcase until the specified height from the crankcase surface is achieved. See Figure 11-43. When threading in the studs, use a steady tightening motion without interruption until the proper height is obtained. Otherwise, the frictional heat from the engaging threads may cause the locking compound to set up prematurely.

The studs **closest** to the lifters must have an exposed height of **75 mm (2 15/16 in.)**.

The studs **furthest** from the lifters must have an exposed height of **69 mm (2 3/4 in.)**.

   c. Remove the nuts and repeat the procedure as required.

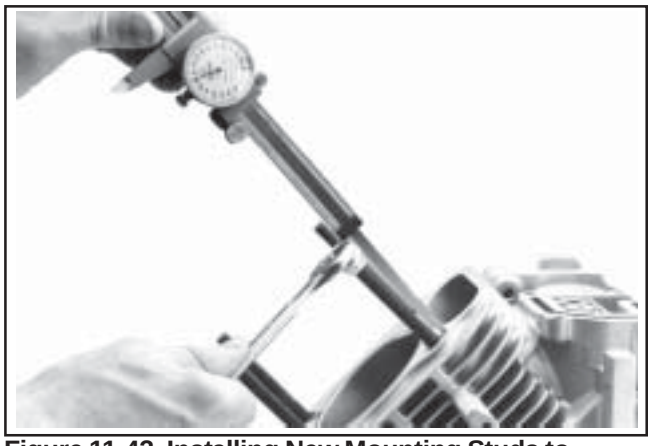

Figure 11-43. Installing New Mounting Studs to Specified Height.

3. Check that the dowel pins are in place and install a new cylinder head gasket (printing up).

4. Install the cylinder head. Match the numbers on the cylinder heads and the crankcase. See Figure 11-36. Make sure the head is flat on the gasket and dowel pins.

5. Lightly lubricate the exposed (upper) threads of the studs with engine oil. Install a flat washer and hex nut onto each of the mounting studs. Torque the hex nuts in two stages; first to **16.9 N·m (150 in. lb.)**, finally to **33.9 N·m (300 in. lb.)**, following the sequence in Figure 11-42.

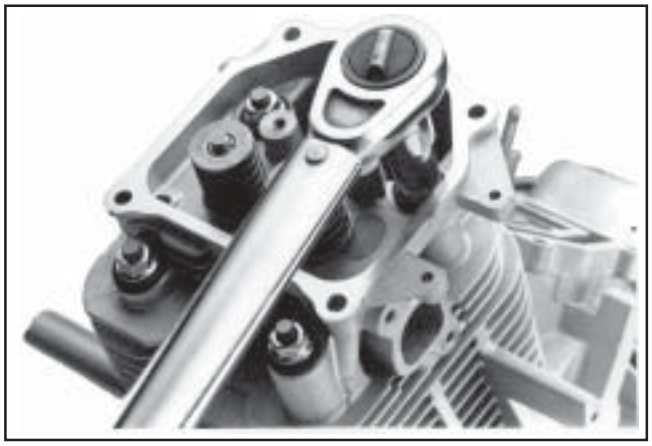

Figure 11-44. Torquing the Cylinder Head Mounting Nuts (Stud Design).

Install Push Rods and Rocker Arms

Early models used hollow push rods with special rocker arms. They are not interchangeable with the later/current style "solid" push rods and associated rocker arms. Do not mix these. A replacement kit is available with "solid" components.

NOTE: Push rods should always be installed in the same position as before disassembly.

1. Note the mark or tag identifying the push rod as either intake or exhaust and cylinder #1 or #2. Dip the ends of the push rods in engine oil and install, making sure that each push rod ball seats in its hydraulic lifter socket. See Figure 11-45.

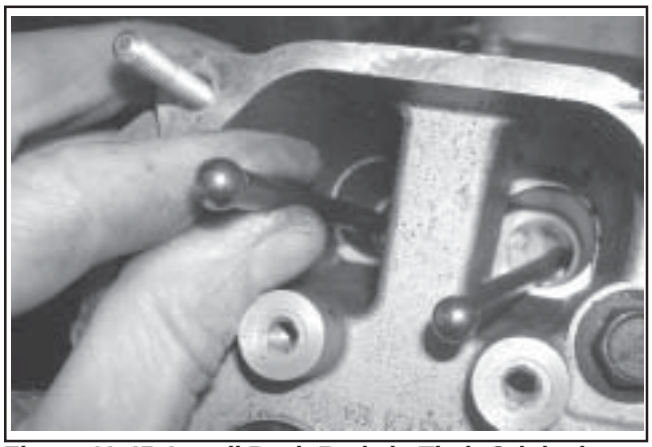

Figure 11-45. Install Push Rods in Their Original Position.

2. Apply grease to the contact surfaces of the rocker arms and rocker arm pivots. Install the rocker arms and rocker arm pivots on one cylinder head, and start the two hex flange screws. See Figure 11-46.

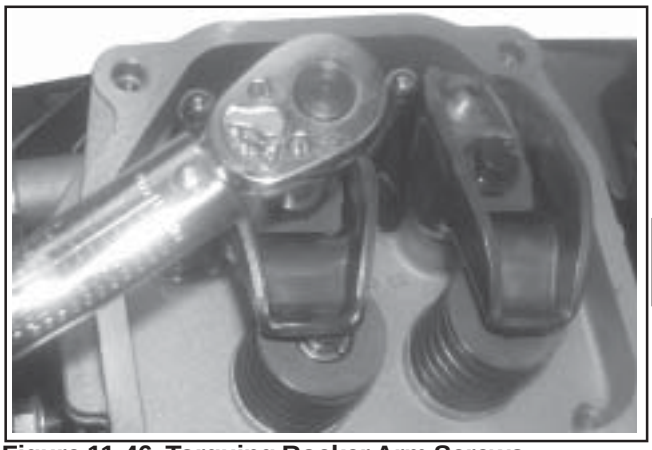

Figure 11-46. Torquing Rocker Arm Screws.

3. Torque the hex flange screws to **11.3 N·m (100 in. lb.)**. Repeat for the other rocker arm.

4. Use a spanner wrench or rocker arm lifting tool (see Section 2) to lift the rocker arms and position the push rods underneath. See Figure 11-47.

5. Repeat the above steps for the remaining cylinder. Do not interchange parts from the cylinder heads.

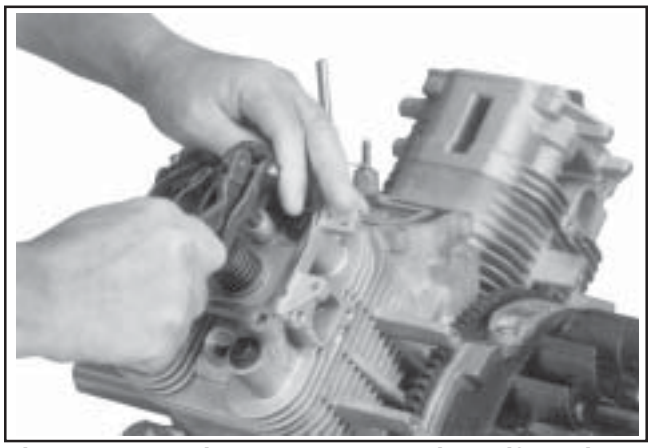

Figure 11-47. Using Spanner Wrench to Lift Rocker Arm Over Push Rod.

6. Rotate the crankshaft to check for free operation of the valve train. Check the clearance between the valve spring coils at full lift. Minimum allowable clearance is **0.25 mm (0.010 in.)**.

Check Assembly

Important: Rotate the crankshaft a minimum of two revolutions to check longblock assembly and overall proper operation.

Install Spark Plugs

1. Use new Champion® (or equivalent) spark plugs.

2. Set the gap at 0.76 mm (0.030 in.).

3. Install new plugs and torque to **24.4-29.8 N·m (18-22 ft. lb.)**. See Figure 11-48.

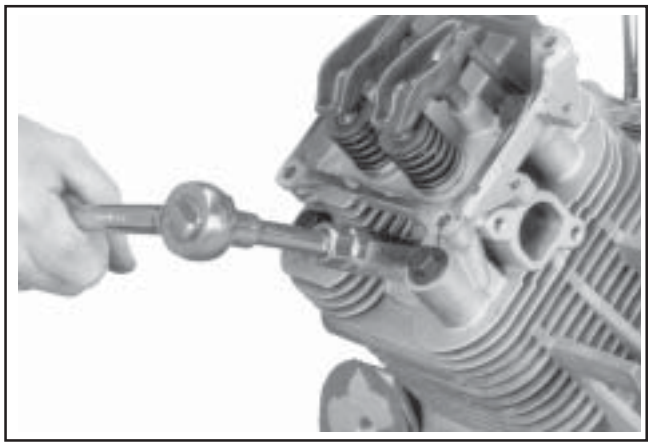

Figure 11-48. Installing Spark Plugs.

Install Ignition Modules

1. Rotate the flywheel to position the magnet away from the ignition module bosses.

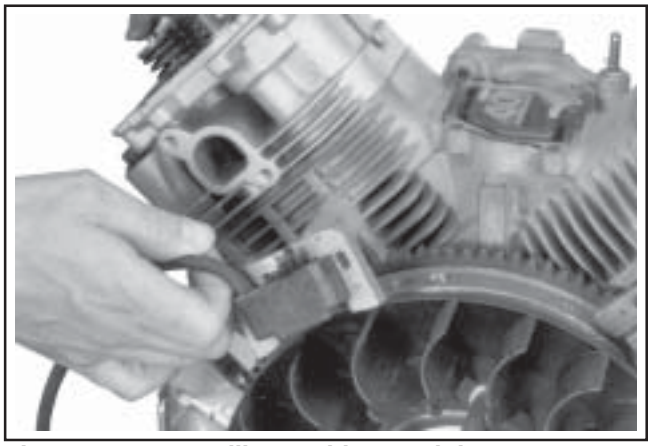

Figure 11-49. Installing Ignition Module.

2. On engines equipped with SMART-SPARK™ both modules are installed the same way - with the two tabs out. See Figure 11-55.

   On engines are not equipped with SMART-SPARK™ the modules are installed with the spark plug lead wire from module always away from the cylinder. On #1 cylinder, the single kill tab should be towards you. See Figure 11-54. On #2 cylinder, the single kill tab should be away from you (in).

3. Install each ignition module to the crankcase bosses with the two screws (hex flange or allen head, based on model). Slide the modules up as far away from the flywheel as possible and snug the screws to hold them in that position.

4. Rotate the flywheel to position the magnet directly under one ignition module.

5. Insert a **0.30 mm (0.012 in.)** flat feeler gauge between the magnet and the ignition module. See Figure 11-50. Loosen the screws enough to allow the magnet to pull the module down against the feeler gauge.

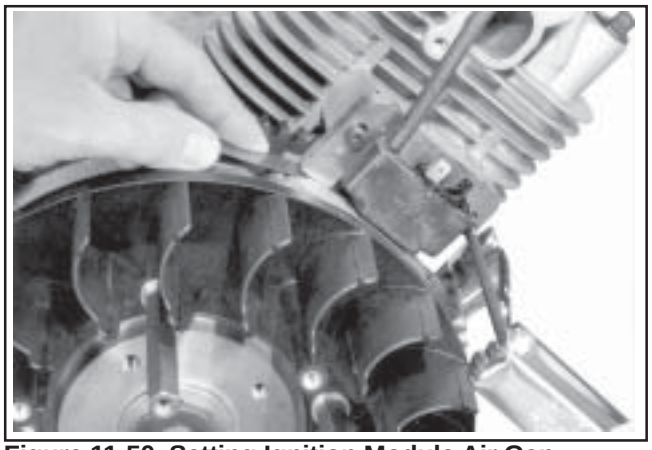

Figure 11-50. Setting Ignition Module Air Gap.

6. Torque the screws to **4.0-6.2 N·m (35-55 in. lb.)**.

7. Repeat steps 4 through 6 for the other ignition module.

8. Rotate the flywheel back and forth checking for clearance between the magnet and ignition modules. Make sure the magnet does not strike the modules. Check the gap with a feeler gauge and readjust if necessary. Final air gap: **0.280/0.330 mm (0.011/0.013 in.)**.

Install Intake Manifold

1. Install the intake manifold and new gaskets or O-Rings (plastic manifold), with wiring harness attached, to the cylinder heads. Slide any wiring harness clips onto the appropriate bolts before installing. Make sure the gaskets are in the proper orientation. Torque the four screws in two stages, first to **7.4 N·m (66 in. lb.),** then to **9.9 N·m (88 in. lb.),** using the sequence shown in Figure 11-51.

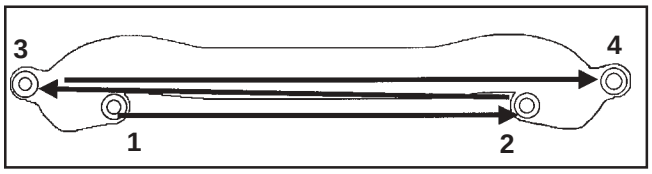

Figure 11-51. Intake Manifold Torque Sequence.

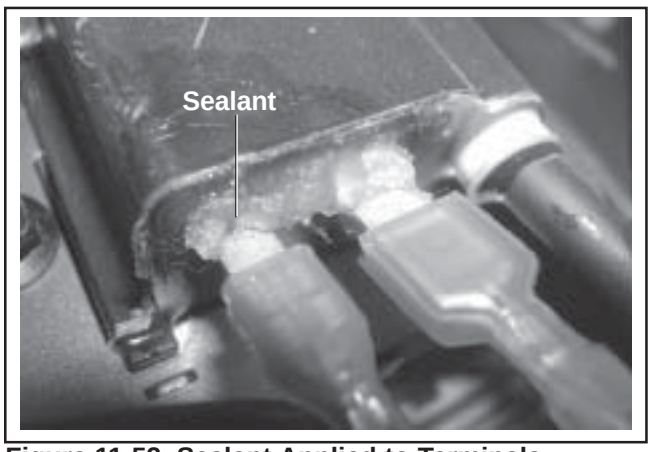

Figure 11-52. Sealant Applied to Terminals.

NOTE: If the wires were disconnected from the ignition modules on engines with SMART-SPARK$_{TM}$, reattach the leads and seal the base of the terminal connectors with GE/ Novaguard G661 (see Section 2) or Fel-Pro Lubri-Sel dielectric compound. The beads should overlap between the terminals* to form a solid bridge of compound. See Figure 11-52. Do not put any compound inside the terminals.

*The 24 584 15-S ignition modules have a separator barrier between the terminals. On these modules, seal the base of the terminals, but it is not necessary to have overlapping beads of sealant between the connections.

2. **Two-Barrel Manifold (Carburetor) Models:** Route the wiring harness through the mounting clip on the underside of debris shield if separated earlier. Carefully position the debris shield to the rear as far as possible. See Figure 11-53.

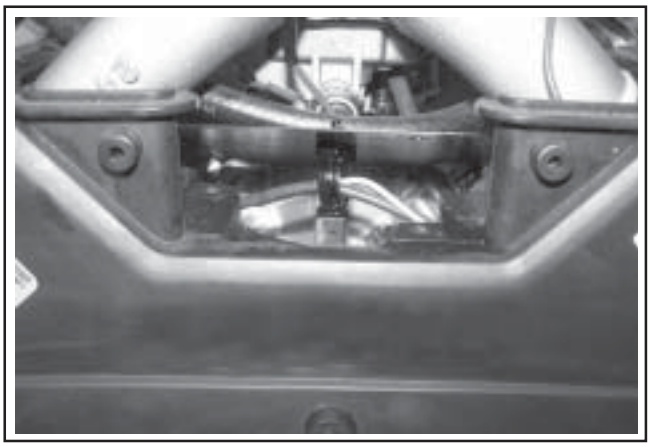

Figure 11-53. Routing of Wiring Harness (Two-Barrel Models).

3. Connect the kill lead to the tab terminal on standard ignition modules. See Figure 11-54.

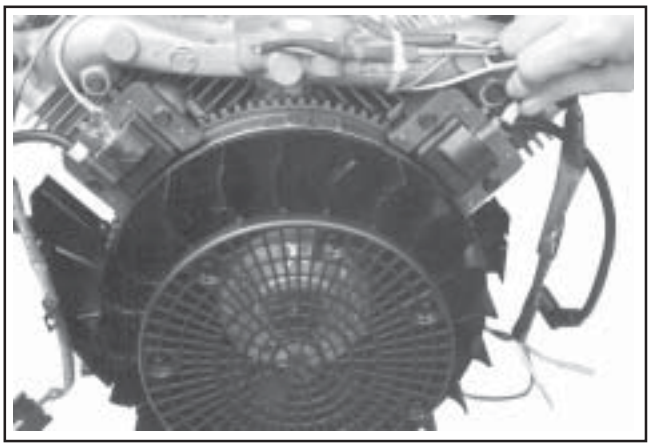

Figure 11-54. Connecting Kill Leads on Standard Ignition Modules.

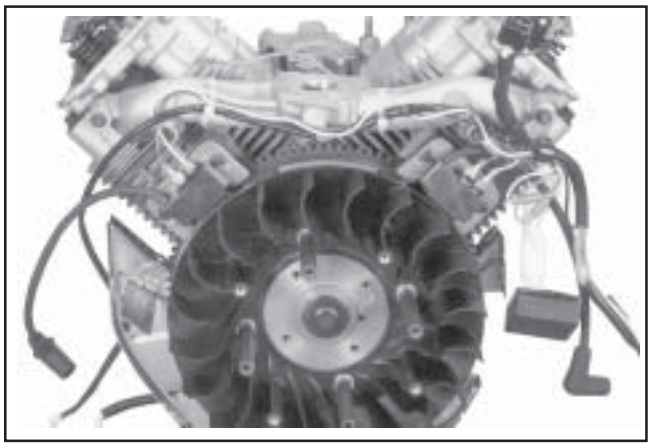

Figure 11-55. Connect Leads on SMART-SPARK™ Ignition Modules.

Install Breather Cover and Inner Baffles

RTV sealant was used on early models between the breather cover and the crankcase. A gasket with imprinted sealant beads is now used and recommended. Install as follows:

1. Be sure the sealing surfaces of the crankcase and breather cover are clean of old gasket material or RTV sealant. **Do not** scrape the surfaces as this could result in leakage.

2. Check to make sure there are no nicks or burrs on sealing surfaces.

3. Install the breather reed and breather reed retainer onto the crankcase and secure with the hex flange screw. Hold the assembly in line when tightening. Torque the screw to **3.9 N·m (35 in. lb.)**. See Figure 11-56.

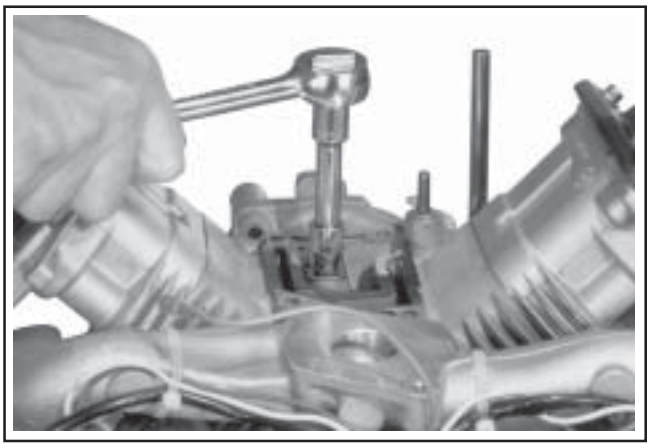

Figure 11-56. Installing Breather Reed Assembly.

4. Insert the breather filter into position in the crankcase. Make sure no filter strands are on the sealing surface. See Figure 11-57.

5. Install the new breather gasket.

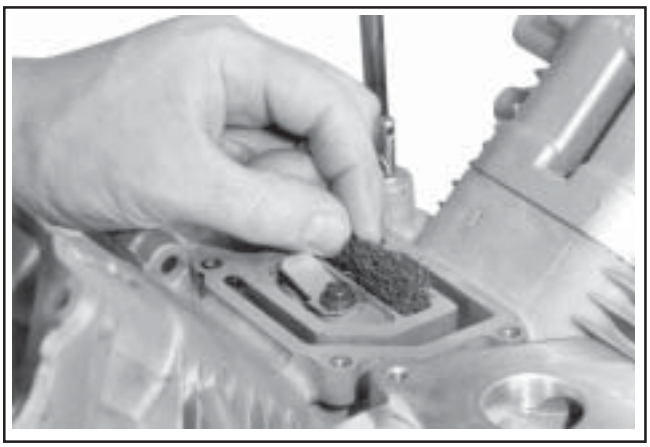

Figure 11-57. Installing New Breather Filter.

6. Carefully position the breather cover on the crankcase. Install first two hex flange screws at positions shown in Figure 11-58 and finger tighten at this time.

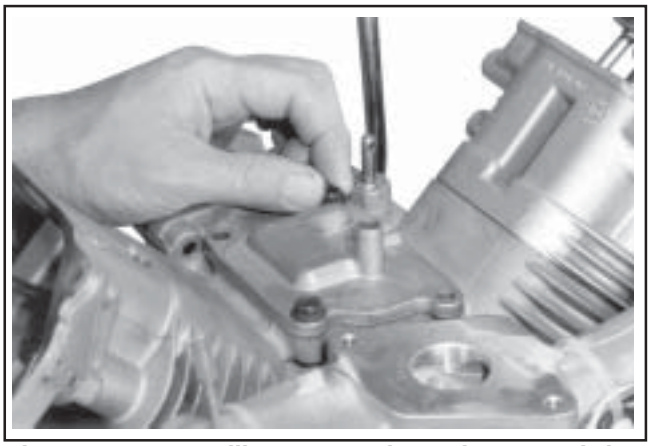

Figure 11-58. Installing Screws (Locations 3 and 4).

7. Install the inner baffles using the two remaining hex flange screws (see Figures 11-59 and 11-60) and finger tighten. **Do not** torque the screws at this time; they will be tightened after the blower housing and outer baffles are installed.

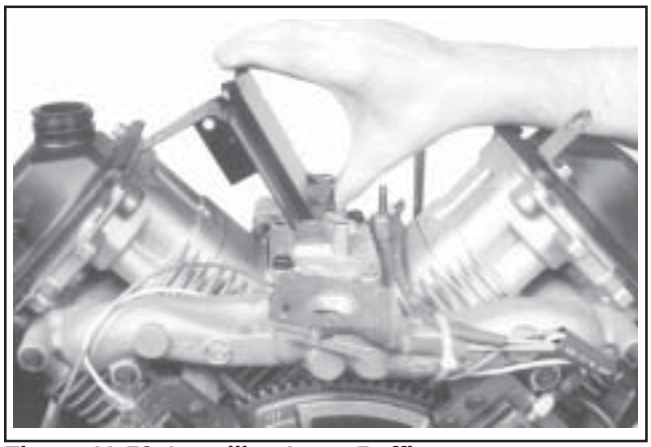

Figure 11-59. Installing Inner Baffles.

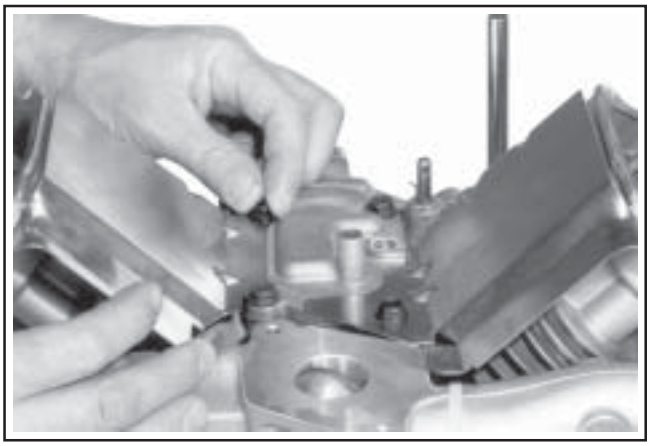

Figure 11-60. Finger Tighten Two Remaining Cover Screws.

Install Blower Housing and Outer Baffles

NOTE: Do not completely tighten screws until all items are installed to allow shifting for hole alignment.

1. Connect the plug to the key switch in the blower housing (if so equipped).

2. Slide the blower housing into position over the front edge of the inner baffles. See Figure 11-61. Start a few of the screws to hold it in place. On two-barrel carburetor models, lift the debris shield up above the mounting surface, as the blower housing is installed. Make sure the ground lead, fuel solenoid lead, and oil pressure switch leads are accessible and in proper position. See Figures 11-61 and 11-62.

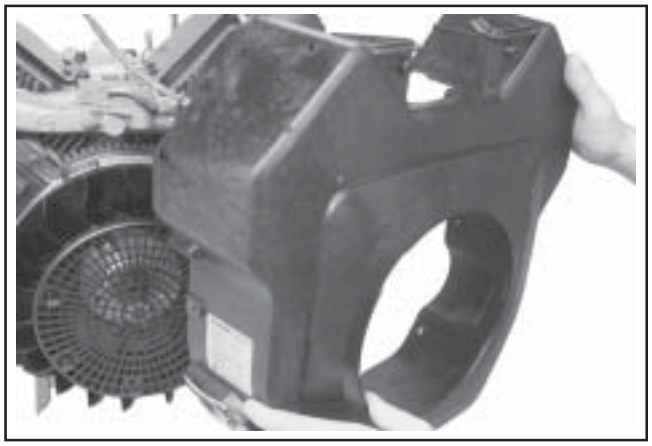

Figure 11-61. Installing Blower Housing.

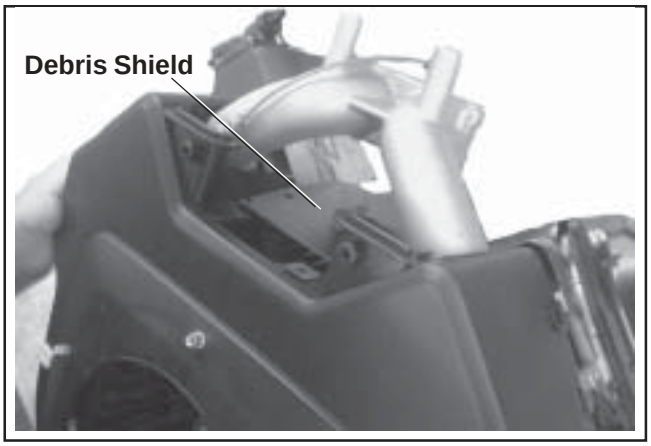

Figure 11-62. Routing Wiring Harness and Leads (Two-Barrel Models).

3. Position the outer baffles and loosely start the mounting screws. The two M6 screws go into the back of the cylinders. The short M5 screws go into the lower holes closest to the blower housing. The short screw on the oil filter side is also used to mount the wire harness clip. Be sure any wire harnesses or leads are routed out through the proper offsets or notches, so they will not be pinched between the blower housing and baffles. See Figure 11-63.

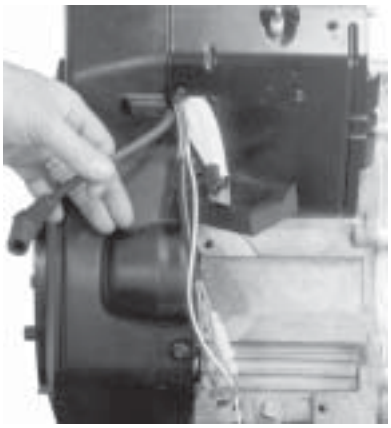

Figure 11-63. Routing Wiring Harness and Leads.

4. If the rectifier-regulator was not removed, attach the ground wire or metal grounding bracket for the rectifier-regulator, using the silver colored screw and washer, to the lower blower housing hole. See Figure 11-64.

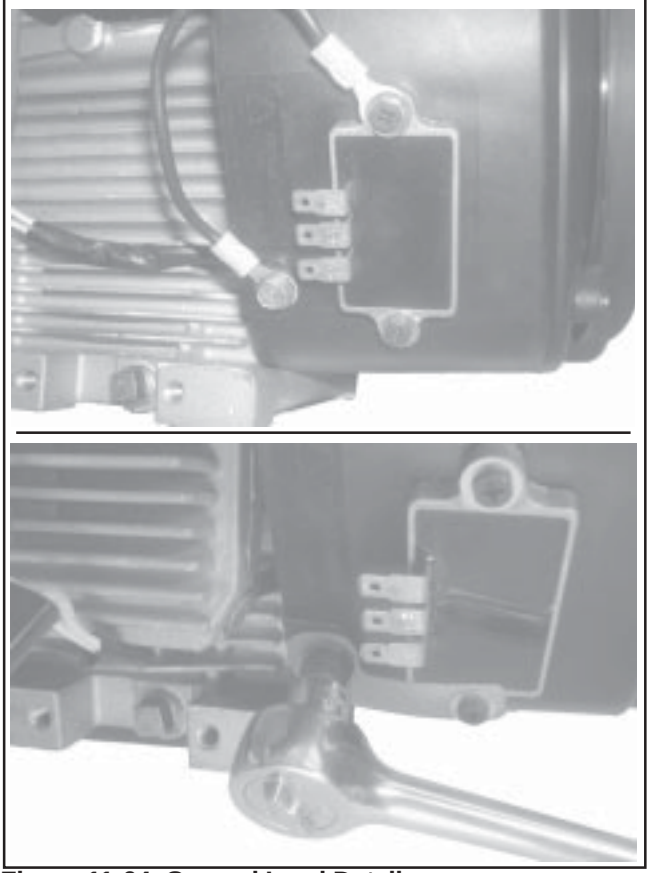

Figure 11-64. Ground Lead Details.

5. Tighten all of the shrouding fasteners. Torque the blower housing screws to **6.2 N·m (55 in. lb.)** in a new hole, or to **4.0 N·m (35 in. lb.)** in a used hole. Torque the shorter M5 side baffle screws to **4.0 N·m (35 in. lb.)**. See Figure 11-65. Torque the upper M5 side baffle screws (into cylinder head) to **6.2 N·m (55 in. lb.)** in a new hole, or to **4.0 N·m (35 in. lb.)** in a used hole. Torque the two rear M6 baffle mounting screws to **10.7 N·m (95 in. lb.)** in a new hole, or to **7.3 N·m (65 in. lb.)** in a used hole. See Figure 11-66.

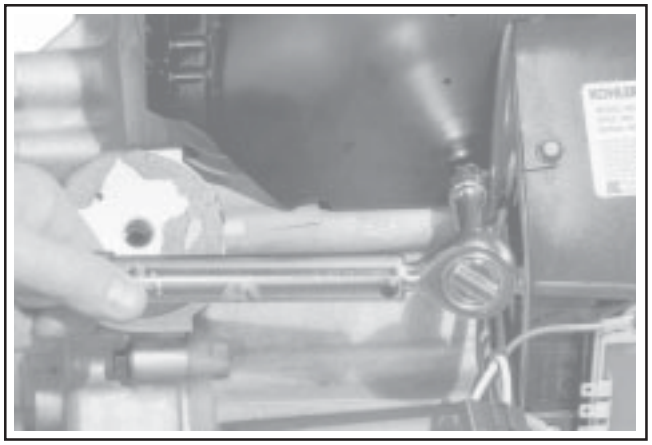

Figure 11-65. Tighten Short Screws to Torque Specified.

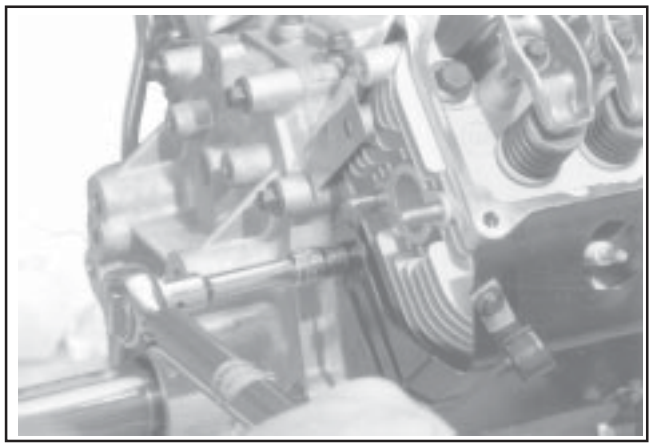

Figure 11-66. Tighten Baffle Mounting Screws.

6. If an overlapping style flywheel screen is used, attach it to the supports or flywheel. For a metal flywheel screen, apply Loctite® No. 242 to the screw threads (M6) and torque to **9.9 N·m (88 in. lb.)**. Torque the plastic screen mounting screws (M4) to **2.2 N·m (20 in. lb.)**.

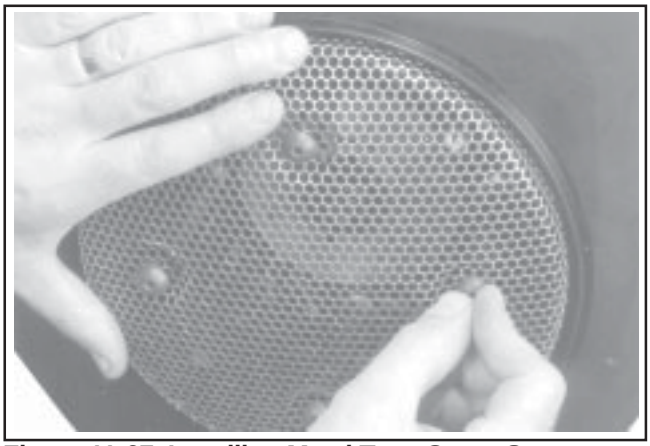

Figure 11-67. Installing Metal Type Grass Screen.

7. Torque the four breather cover screws to **7.3 N·m (65 in. lb.)** in the sequence shown in Figure 11-68.

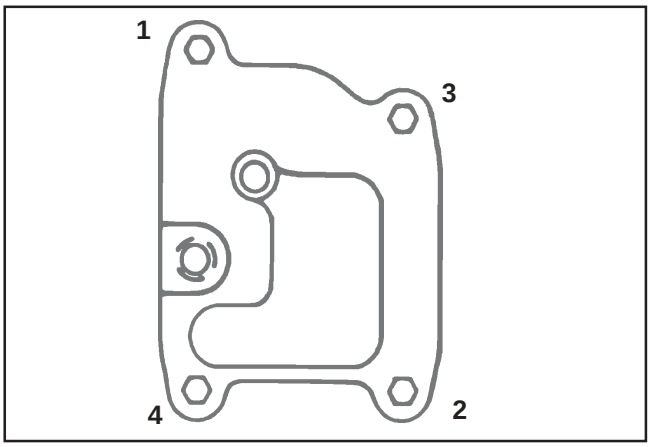

Figure 11-68. Breather Cover Fastener Torque Sequence.

Reconnect Rectifier-Regulator

1. Install the rectifier-regulator in the blower housing, if removed previously, then connect the rectifier-regulator ground lead with the washer and silver screw through the eyelet as shown in Figure 11-69. If a grounding bracket is used, secure with the lower mounting screw and washer, against the **outer** side of the rectifier-regulator. See Figure 11-71.

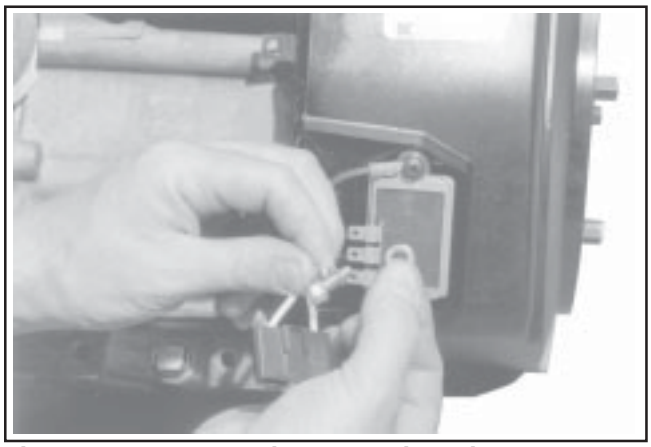

Figure 11-69. Connecting Ground Lead.

2. Install the B+ terminal/lead into the center position of the rectifier-regulator plug and connect the plug to the rectifier-regulator. See Figures 11-70 and 11-71.

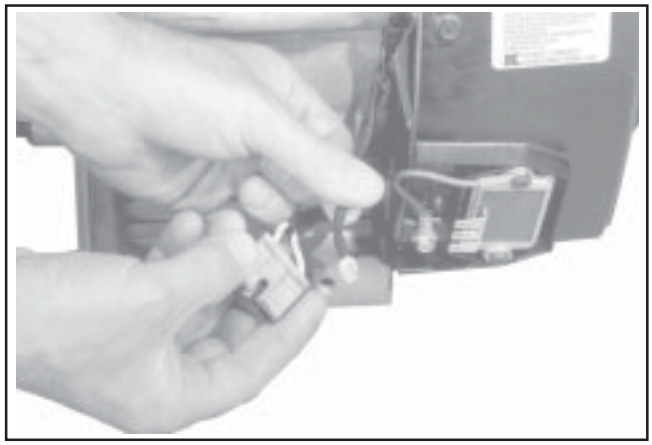

Figure 11-70. Installing B+ Lead into Plug.

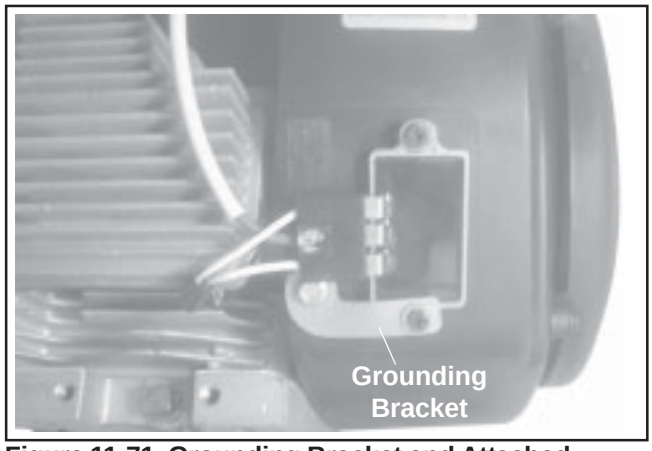

Figure 11-71. Grounding Bracket and Attached Connector.

SMART-SPARK™ Module

1. On engines with SMART-SPARK™, reinstall the SAM module to the blower housing or cylinder baffle. Do not overtighten the retaining screws. See Figure 11-72.

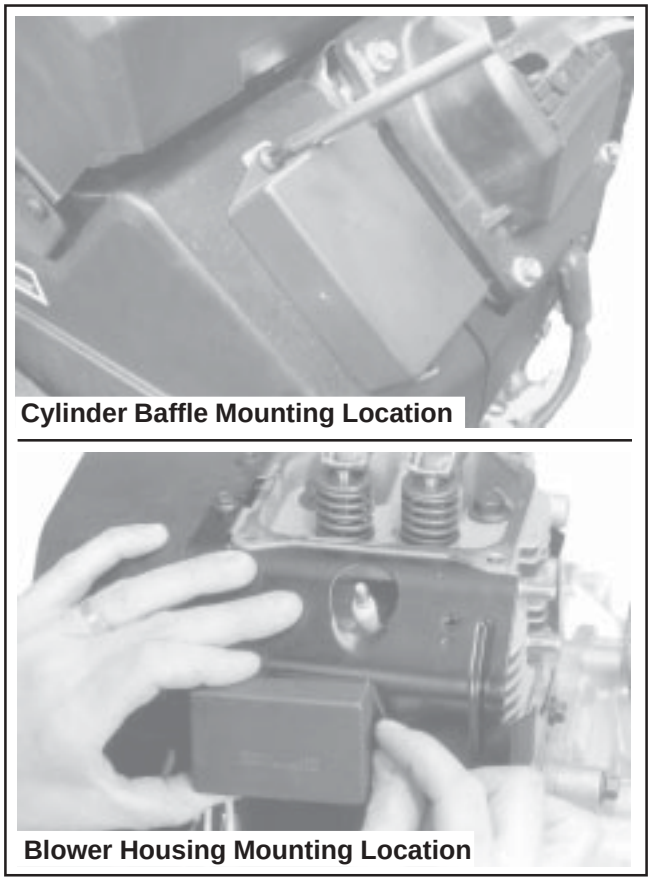

Figure 11-72. Reinstalling SAM Module.

Install Electric Starter Motor

1. Install the starter motor using the two hex flange screws. See Figure 11-73. Some inertia-drive starters have a pinion cover and spacers on the starter bolts.

2. Torque the two hex flange screws to **15.3 N·m (135 in. lb.)**.

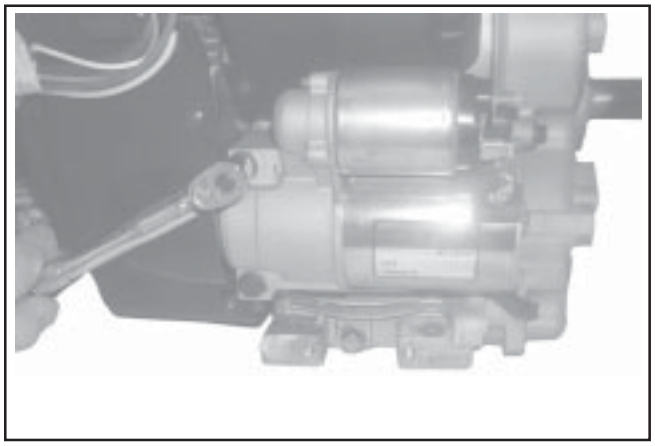

Figure 11-73. Installing Electric Starter Motor.

3. On models with a solenoid shift starter, connect the leads to the solenoid. See Figure 11-74.

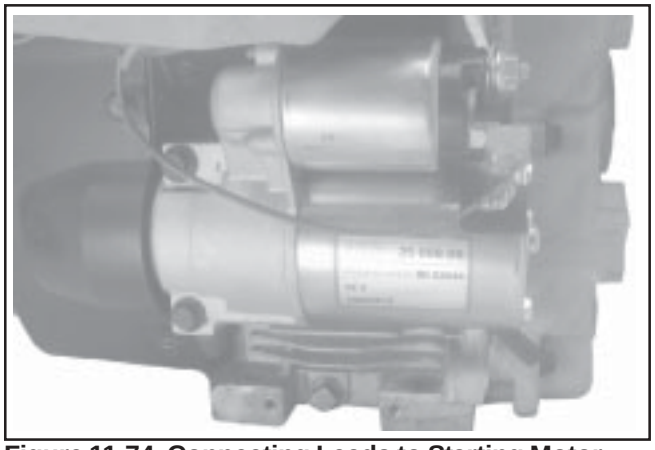

Figure 11-74. Connecting Leads to Starting Motor.

NOTE: If the engine uses a side mount muffler on the starter side, be sure to tie the wires close to the starter to avoid contact with hot exhaust parts.

Install Fuel Pump

WARNING: Explosive Fuel

Gasoline may be present in the carburetor and fuel system. Gasoline is extremely flammable and its vapors can explode if ignited. Keep sparks and other sources of ignition away from the engine.

1. Install the pulse style fuel pump and lines as an assembly. Connect the pulse line to the crankcase vacuum fitting or the valve cover, whichever source is used.

   NOTE: Pulse style fuel pumps may be made of metal or plastic. See Figure 11-75. If a new fuel pump is being installed, make sure the orientation of the new pump is consistent with the removed pump. Internal damage may occur if installed incorrectly.

2. Install the fuel pump using the two hex flange screws. Torque the screws to **2.3 N·m (20 in. lb.)**.

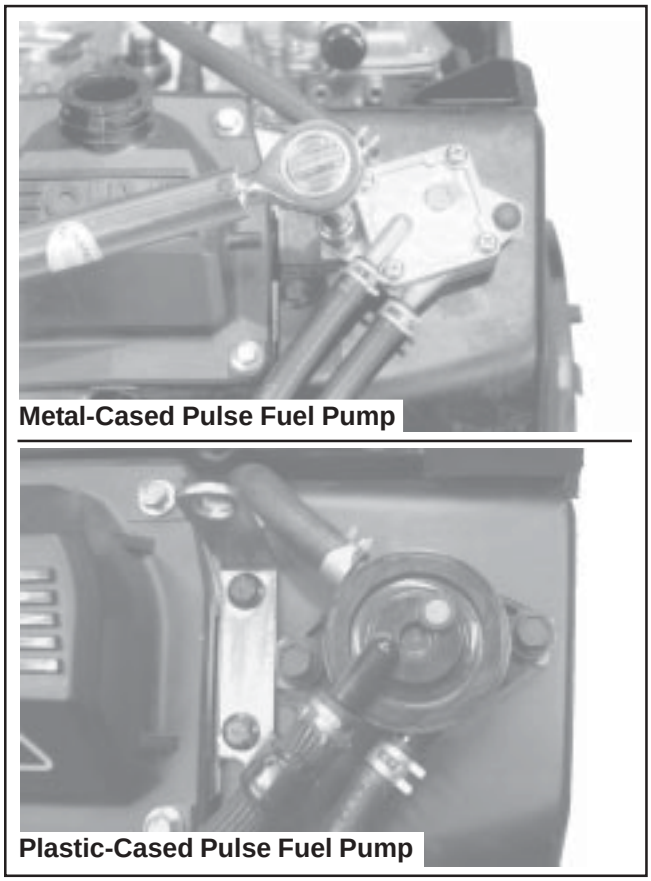

Figure 11-75. Reinstalled Fuel Pump.

Install Carburetor

WARNING: Explosive Fuel!

Gasoline may be present in the carburetor and fuel system. Gasoline is extremely flammable and its vapors can explode if ignited. Keep sparks and other sources of ignition away from the engine.

One-Barrel Carburetor Models:

1. Install a new carburetor gasket. Make sure all holes align and are open.

2. Install the carburetor, throttle linkage and governor lever as an assembly. See Figure 11-76. If a plastic intake manifold is used and the carburetor is equipped with a fuel solenoid, attach the ground lead to the carburetor mounting screw. See Figure 11-77.

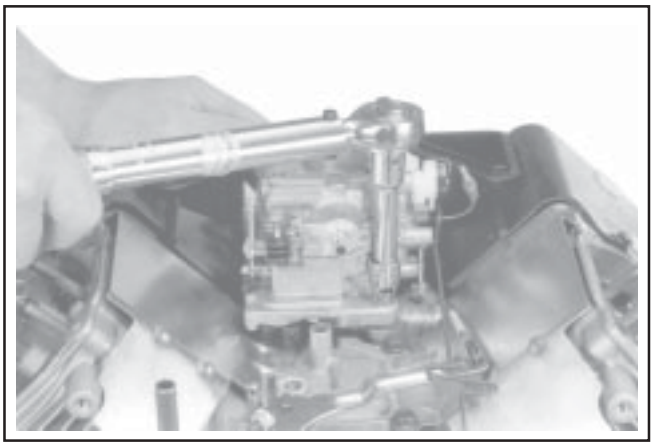

Figure 11-76. Installing Carburetor Assembly.

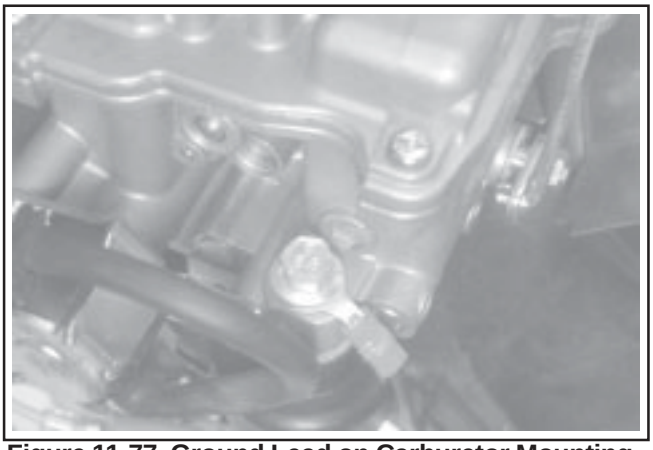

Figure 11-77. Ground Lead on Carburetor Mounting Screw (One-Barrel Carburetor).

3. Torque the two carburetor mounting screws to **6.2-7.3 N·m (55-65 in. lb.)**.

Two-Barrel Carburetor Models:

1. Use a new carburetor gasket. Make sure all holes align and are open.

2. Apply Loctite® 242 to the shorter (inner) set of threads of any removed studs.

3. Assemble carburetor gasket and carburetor to the intake manifold, and start any removed studs. Use two hex nuts locked flange to flange and tighten each of the studs until bottomed/tight. See Figure 11-78.

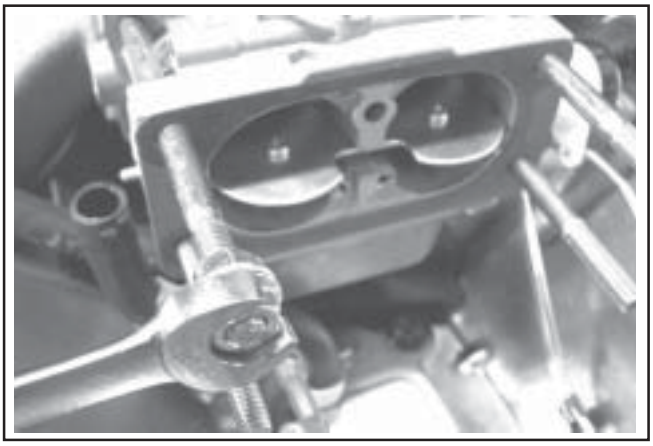

Figure 11-78. Installing Studs and Carburetor (Two-Barrel Carburetor).

4. Connect the ground lead and fuel solenoid lead as equipped. See Figure 11-79.

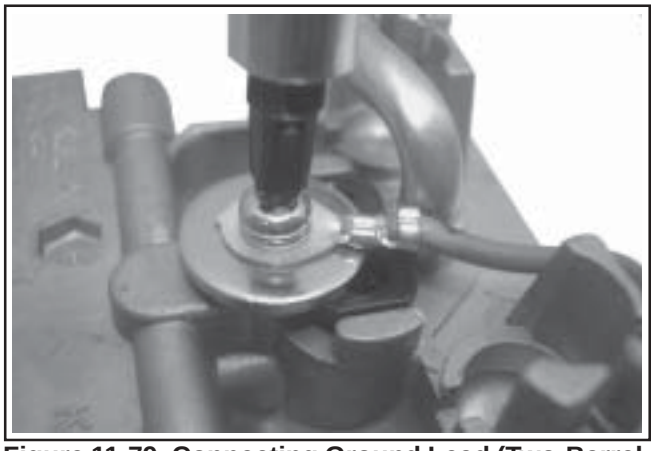

Figure 11-79. Connecting Ground Lead (Two-Barrel Carburetor).

Install External Governor Controls

1. Install the governor lever onto the governor cross shaft. See Figure 11-80.

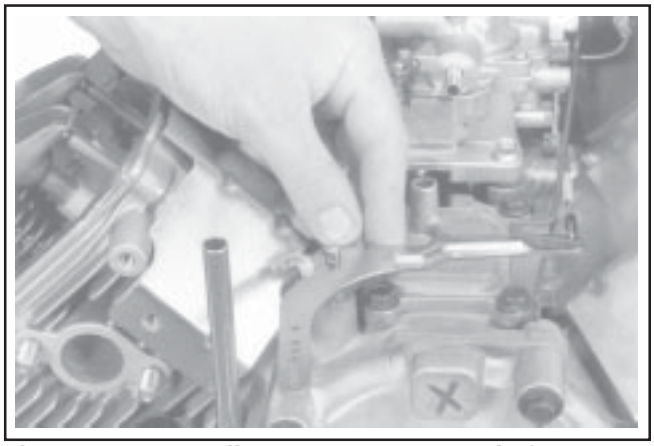

Figure 11-80. Install Governor Lever to Shaft.

2. Make sure the throttle linkage is connected to the governor lever and the throttle lever on the carburetor.

3. Move the governor lever **toward** the carburetor as far as it will go (wide-open throttle) and hold in position. See Figure 11-81.

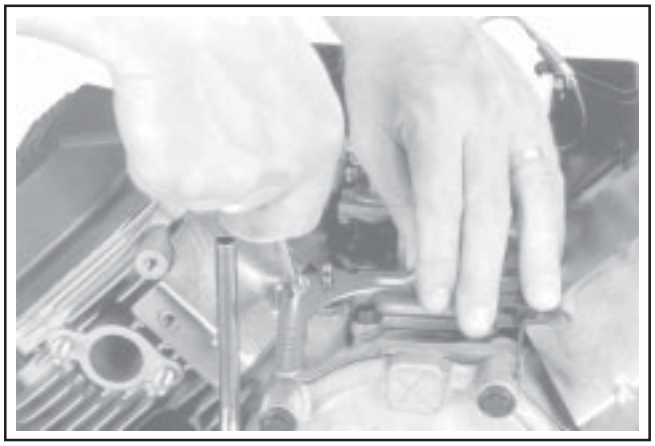

Figure 11-81. Adjusting Governor Lever.

4. Insert a nail into the hole on the cross shaft and rotate the shaft **counterclockwise** as far as it will turn, then torque the hex nut to **6.8 N·m (60 in. lb.)**. See Figure 11-82.

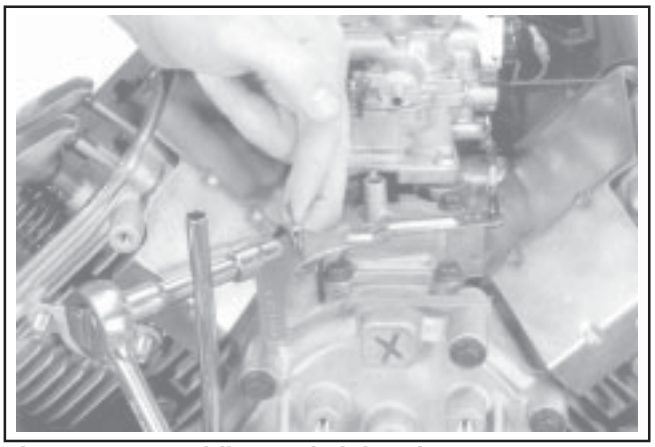

Figure 11-82. Holding and Tightening Governor Arm.

5. Reconnect the lead wire to the fuel shut-off solenoid if so equipped.

Install Throttle & Choke Controls

1. Connect the choke linkage to the carburetor and choke actuator lever. See Figure 11-83.

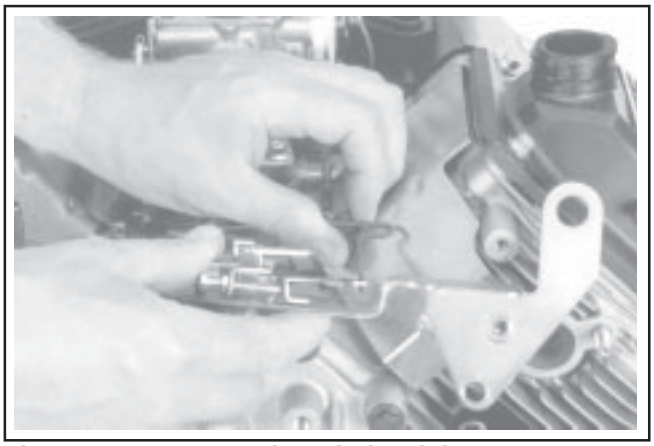

Figure 11-83. Connecting Choke Linkage.

2. Mount the main control bracket, and air cleaner support bracket (if used) to the cylinder heads using the four hex flange screws. Torque the screws to **10.7 N·m (95 in. lb.)** into new holes, or **7.3 N·m (65 in. lb.)** into used holes. See Figure 11-84.

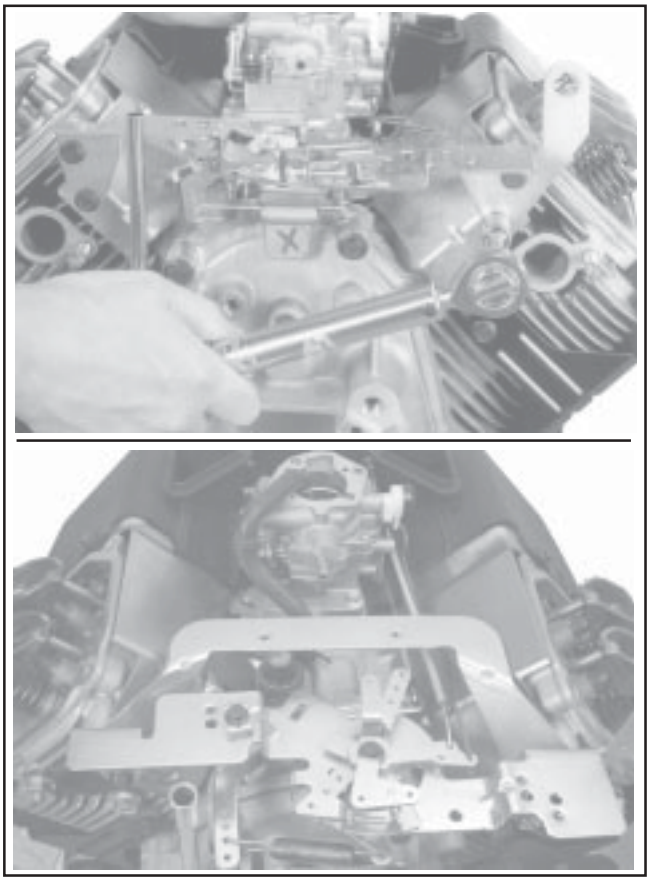

Figure 11-84. Torquing Main Control Bracket.

3. Connect the governor spring from the main control bracket to the appropriate hole in the governor lever as indicated in the following charts. Note that hole positions are counted from the pivot point of the governor lever. See Figures 11-85 and 11-86, and the appropriate chart.

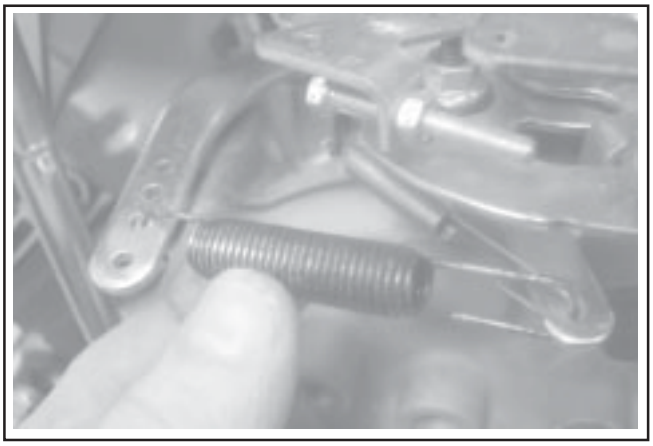

Figure 11-85. Connecting Spring to Governor Lever.

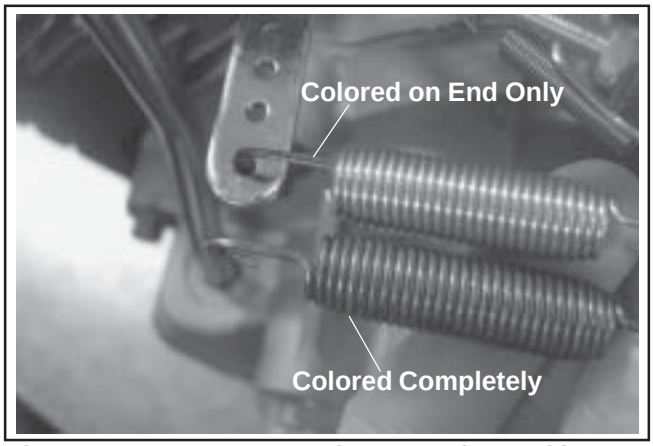

Figure 11-86. Governor Spring I.D. Color Markings.

6 mm Governor Lever and Hole Position/RPM Chart

High Idle RPM	Gov. Lever Hole No.	Governor Spring Color Code
3801-4000	5	Clear
3601-3800	4	Clear
3451-3600	3	Clear
3301-3450	2	Clear
3101-3300	4	Purple
2951-3100	3	Purple
2800-2950	2	Purple
3750*	3	Clear
3150*	3	Purple

*5% Regulation (others 10%)

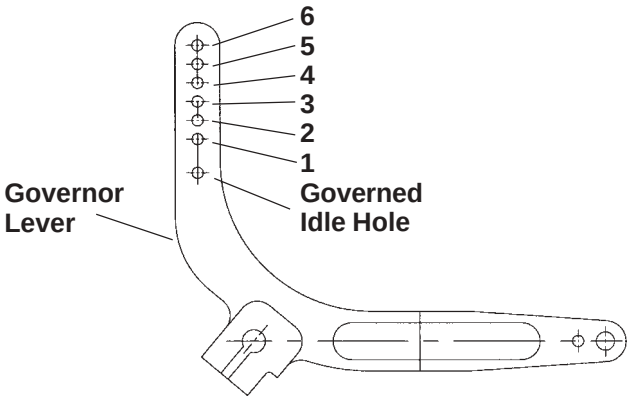

8 mm Governor Lever and Hole Position/RPM Charts

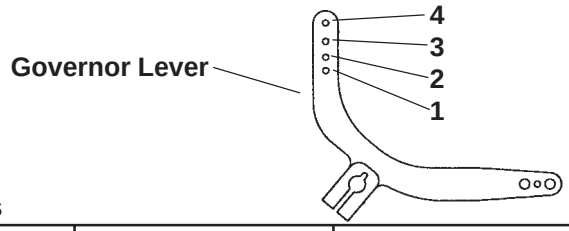

CH18 Engines

Governor Shaft Configuration	Intended Maximum RPM		Non-Accelerator Pump Carburetor		Accelerator Pump Carburetor	
	High Idle	WOT	Spring Color	Hole No.	Spring Color	Hole No.
Needle Bearing	3744	3600	Orange	2	-	-
	3120	3000	Clear	1	-	-
Standard (Parent Material)	3888	3600	Blue	4	Purple	3
	3780	3500	Orange	3	Black	3
	3672	3400	Clear	4	Red	3
	3564	3300	Blue	3	Orange	2
	3456	3200	Purple	2	Blue	2
	3348	3100	Black	2	Orange	1
	3240	3000	Red	2	Black	1
	3132	2900	Green	1	Red	1
	3024	2800	Blue	1	Clear	1

CH20-740 Engines

Governor Shaft Configuration	Intended Maximum RPM		Non-Accelerator Pump Carburetor		Accelerator Pump Carburetor	
	High Idle	WOT	Spring Color	Hole No.	Spring Color	Hole No.
Needle Bearing	3744	3600	Orange	2	-	-
	3120	3000	Clear	1	-	-
Standard (Parent Material)	3888	3600	Red	4	Purple	3
	3780	3500	Purple	3	Black	3
	3672	3400	Black	3	Red	3
	3564	3300	Red	3	Orange	2
	3456	3200	Purple	2	Blue	2
	3348	3100	Blue	2	Orange	1
	3240	3000	Orange	1	Black	1
	3132	2900	Clear	2	Red	1
	3024	2800	Red	1	Clear	1

CH26,CH745 EFI Engines / CH750 Engines

Governor Shaft Configuration	Intended Maximum RPM				with Governor Idle System	
	High Idle	WOT	Spring Color	Hole No.	Spring Color	Hole No.
Standard (Parent Material)	3888	3600	Orange	3	Blue	3
	3780	3500	Black	3	Purple	2
	3672	3400	Red	3	Orange	1
	3564	3300	Green	2	Green	1
	3456	3200	Red	2	Black	1
	3348	3100	Green	1	Red	1
	3240	3000	Blue	1	-	-
	3132	2900	Clear	1	-	-
	3024	2800	-	-	-	-

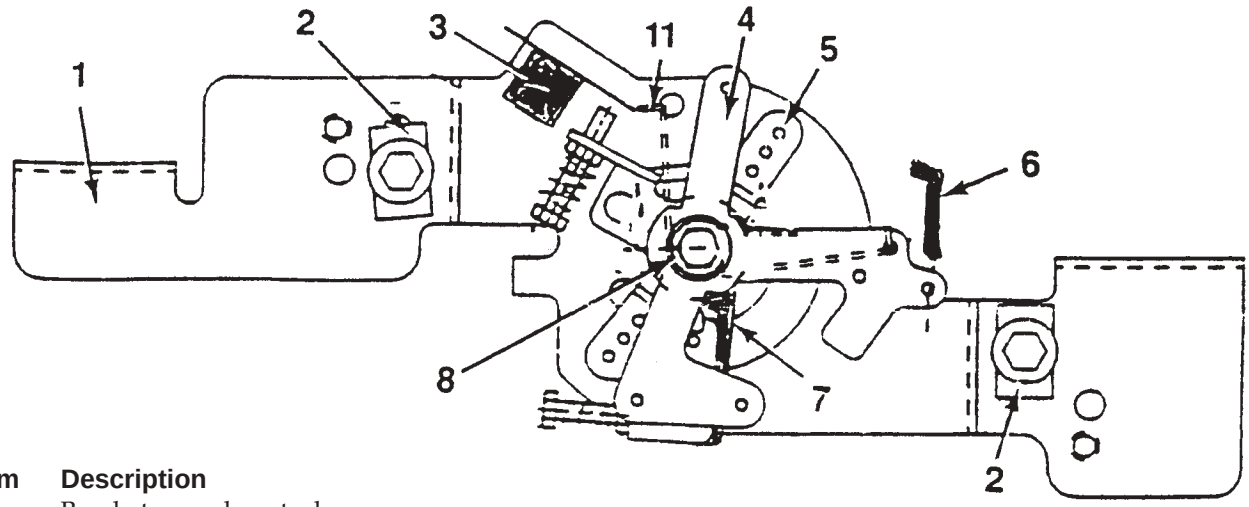

Item	Description
1	Bracket, speed control
2	Clamp, cable (some applications)
3	Kill Switch (some applications)
4	Lever, choke (top position)
5	Lever, throttle control (middle)
6	Linkage, choke control
7	Lever, throttle actuator (bottom)
8	Screw, M5x0.8x20
9	Washer, wave
10	Washer, flat (3)
11	Spring, choke return
12	Nut, M5x0.8 lock

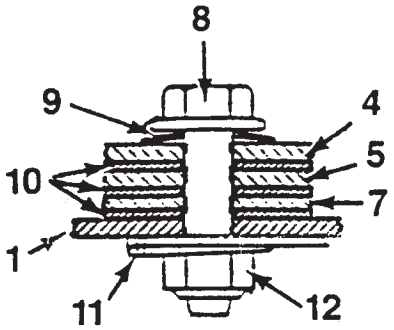

Figure 11-87. Throttle/Choke Control Bracket Detail.

Install Oil Sentry™ (If So Equipped)

1. Apply **pipe sealant with Teflon®** (Loctite® No. 59241 or equivalent) to the threads of the Oil Sentry™ switch and install it into the breather cover. See Figure 11-88. Torque to **4.5 N·m (40 in. lb.)**.

2. Connect the wire lead (green) to the Oil Sentry™ terminal.

Figure 11-88. Installing Oil Sentry™ Switch.

Install Control Panel (If So Equipped)

1. Install the panel to the blower housing.

2. Connect the throttle control cable or shaft.

3. Connect the choke control cable to the control bracket.

4. Connect the Oil Sentry™ indicator light wires.

Install Valve Covers

Three valve cover designs have been used. The earliest type used a gasket and RTV sealant between the cover and sealing surface of the cylinder head. The second type had a black O-Ring installed in a groove on the underside of the cover and may have metal spacers in the bolt holes. The newest design uses a yellow or brown O-Ring, with bolt hole spacers molded in place. The tightening torque differs between gasket and O-Ring style covers. Kits are available for converting to the latest O-Ring type covers. Differences are pointed out in the following installation steps.

NOTE: Do not scrape old RTV sealant (if used) off the sealing surface of the cylinder head as this could cause damage and result in leaks. The use of gasket remover solvent (paint remover) is recommended.

1. If using the gasket or sealant type cover, prepare the sealing surfaces of the cylinder head and cover as directed in Service Bulletin 252. Refer to Section 2, for approved sealants. Always use fresh sealant – using outdated sealant could result in leakage. With O-Ring type covers, make sure the sealing surfaces are clean.

2. Make sure there are no nicks or burrs on the sealing surfaces.

3. For covers requiring RTV sealant, apply a 1.5 mm (1/16 in.) bead to the sealing surface of both cylinder heads, install a new valve cover gasket on each, then apply a second bead of sealant on the top surface of the gaskets. For O-Ring type covers, install a new O-Ring in the groove of the covers. **Do not** use gaskets or RTV sealant.

4. Locate the cover with the oil fill neck on the same side as removed and install the lifting strap in the original position. With O-Ring type covers, position the cover on the cylinder head. If loose spacers were used, insert a spacer in each of the screw holes. On both types, install the four hex flange screws in each cover and finger tighten.

5. Torque the valve cover fasteners to the proper specification using the sequence shown in Figure 11-89.

Gasket/RTV style cover ..... 3.4 N·m (30 in. lb.)
Black O-Ring style cover
with shoulder screws ..... 5.6 N·m (50 in. lb.)
with screws and spacers .... 9.9 N·m (88 in. lb.)
Yellow or Brown O-Ring style cover
with integral spacers ..... 6.2 N·m (55 in. lb.)

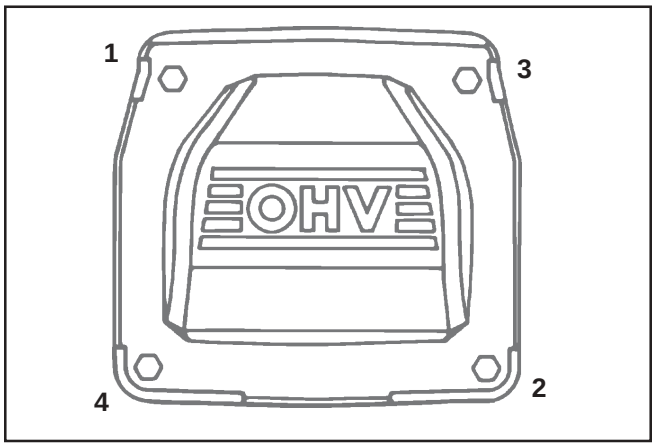

Figure 11-89. Valve Cover Fastener Torque Sequence.

NOTE: Fastener #2 may secure fuel pump bracket on earlier models.

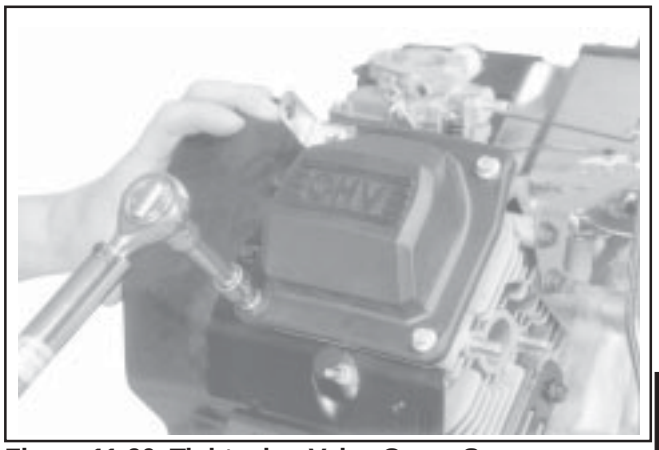

Figure 11-90. Tightening Valve Cover Screws.

Install Air Cleaner Assembly

Refer to Section 4 for air cleaner reassembly procedure.

Standard Air Cleaner

1. Attach the rubber breather hose to the breather cover. Connect the fuel inlet line to the carburetor and secure with a clamp. See Figure 11-91.

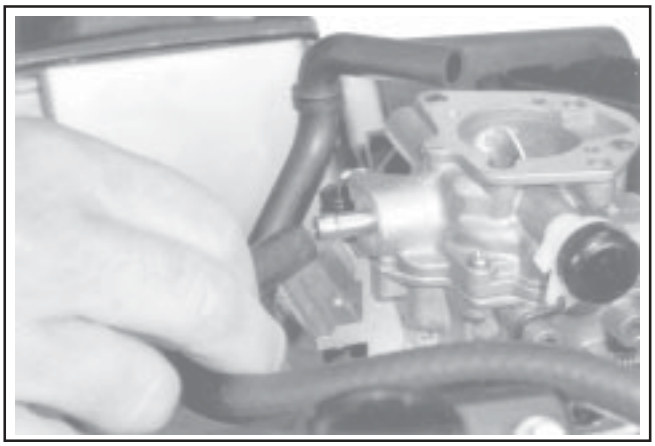

Figure 11-91. Connecting Fuel Inlet Line.

2. Position a new gasket and the air cleaner base while carefully pulling the loose end of the rubber breather hose through the base until properly seated (collars sealed against each side of base). See Figure 11-92.

Figure 11-92. Pulling Breather Hose through Base.

NOTE: Route the fuel line in the contour, as shown in Figure 11-93, to avoid restriction.

Figure 11-93. Fuel Inlet Line Detail.

3. Secure the air cleaner base and bracket using the hex flange screws. Position the bracket with the hole toward the breather hose. Be careful not to drop screws into the carburetor. If a rear air cleaner bracket is used, install the two M5 screws through the rear of the base. Torque the three M6 screws to **6.2-7.3 N·m (55-65 in. lb.)** and the two rear M5 mounting screws (when applicable) to **4.0 N·m (35 in. lb.)**. See Figures 11-94 and 11-95.

Figure 11-94. Torquing Base Screws.

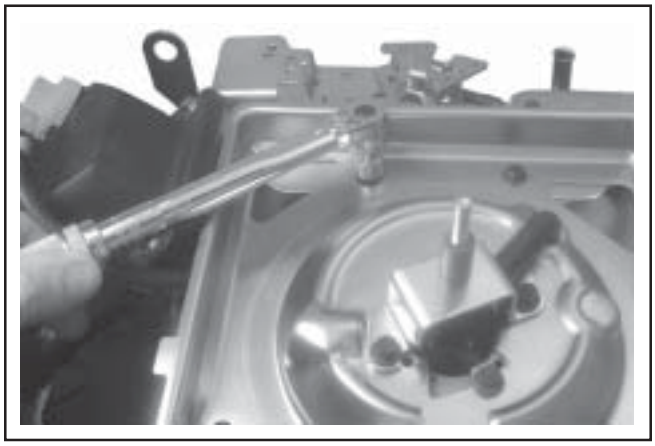

Figure 11-95. Tightening Rear Base/Bracket Screws (Some Models).

4. Install the breather hose in the hole in the bracket.

5. Install the air cleaner components as described in Section 4.

Heavy Duty Air Cleaner

1. Connect the breather hose to breather cover and fitting on adapter elbow. Route the fuel line adjacent to fuel solenoid, and secure to the carburetor inlet with a clamp. See Figure 11-96.

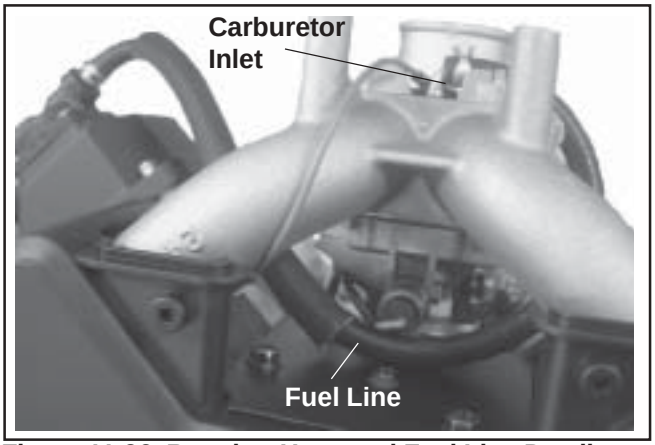

Figure 11-96. Breather Hose and Fuel Line Details.

2. Align the air cleaner mounting bracket with the valve cover mounting holes and start the screws. On two-barrel carburetor models start the two mounting screws into the top of intake manifold. See Figure 11-97.

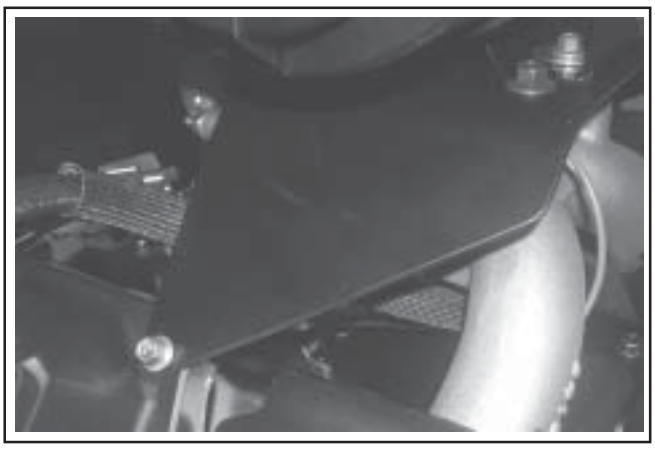

Figure 11-97. Mounted Air Cleaner Bracket (Two-Barrel Carburetor).

3. Check alignment of bracket and torque the valve cover screws as prescribed in "Install Valve Covers". Torque the upper mounting screws into the manifold (two-barrel models only) to **9.9 N·m (88 in. lb.)**.

4. Connect the air cleaner hose to elbow or adapter on carburetor and secure with a clamp. Install and tighten hood onto the air cleaner inlet. See Figure 11-98.

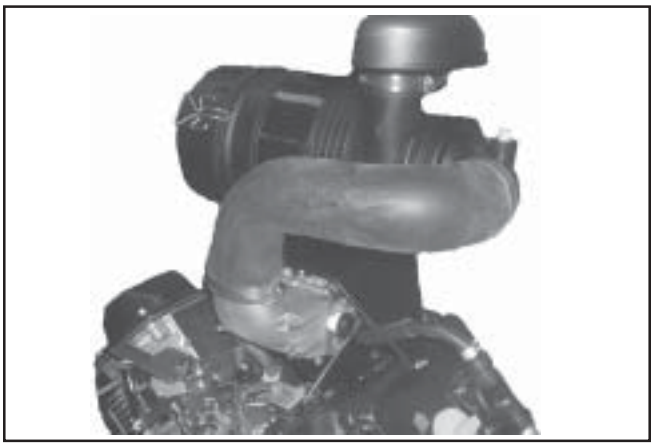

Figure 11-98. Assembled Heavy Duty Air Cleaner (Two-Barrel Carburetor).

Install Muffler

1. Install the port liners (if equipped). Install the muffler and attaching hardware to the muffler bracket. Torque screws to **9.9 N·m (88 in. lb.)**.

2. Install the hex flange nuts to the exhaust studs. Torque hex flange nuts to **24.4 N·m (216 in. lb.)**.

Install Oil Cooler

1. Reinstall the oil cooler on the engine (if equipped). Install a new gasket between the cooler and the closure plate. Torque nipple adapter to **27 N·m (20 ft. lb.)**. See Figures 11-99 and 11-100.

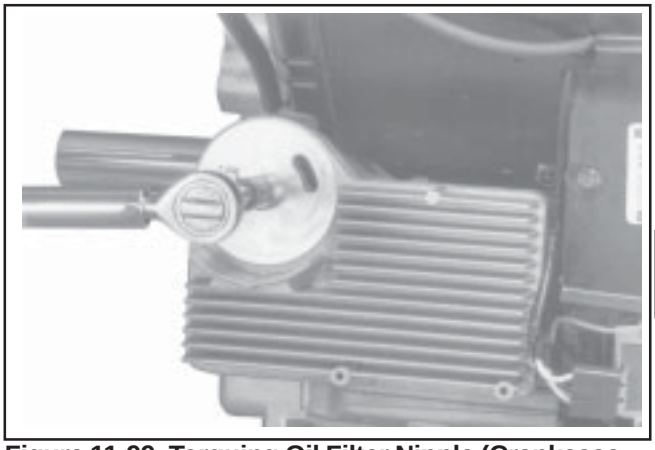

Figure 11-99. Torquing Oil Filter Nipple (Crankcase Mounted Cooler).

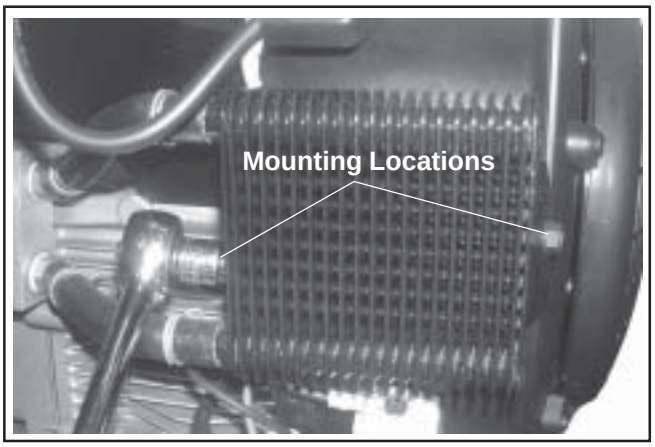

Figure 11-100. Mounting Oil Cooler (Blower Housing Mounted Cooler).

Install Oil Filter and Fill Crankcase with Oil

1. Prefill a new oil filter following the instructions in Section 6.

2. Apply a thin film of clean engine oil to the rubber gasket on the oil filter and thread the filter onto the adapter nipple. See Figure 11-101.

Figure 11-101. Installing New Oil Filter.

3. Hand tighten the filter until the rubber gasket contacts the adapter, then tighten the filter an additional 3/4-1 turn. See Figure 11-102.

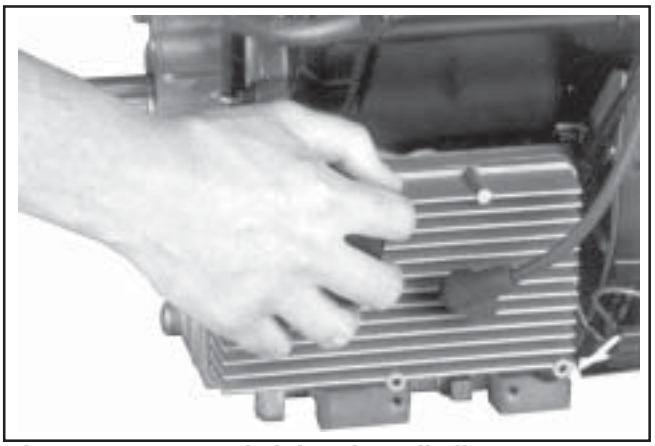

Figure 11-102. Hand Tightening Oil Filter.

4. Install the oil drain plugs. See Figure 11-103. Torque the plugs to **13.6 N·m (10 ft. lb.)**.

   NOTE: Make sure that both oil drain plugs are installed and torqued to the above specifications to prevent oil leakage.

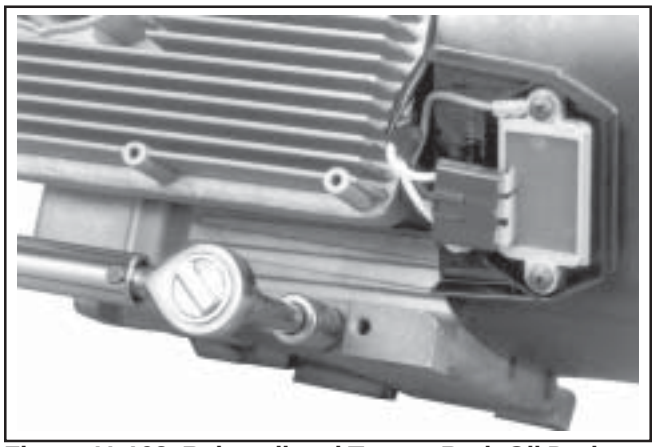

Figure 11-103. Reinstall and Torque Both Oil Drain Plugs.

5. Add oil to bring the level up to “F” mark and reinstall the dipstick. See Figure 11-104.

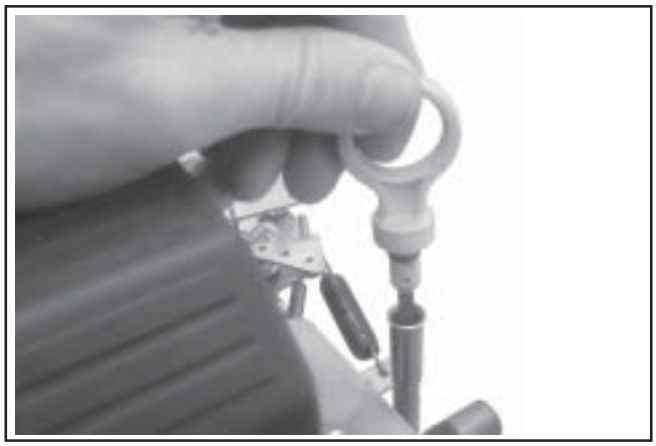

Figure 11-104. Reinstall the Dipstick in Tube.

6. Make sure the O-Ring is in place then reinstall the oil fill cap on the valve cover. See Figure 11-105.

Figure 11-105. Reinstalling Oil Fill Cap (Some Models).

Connect Spark Plug Leads

1. Connect the leads to the spark plugs. See Figure 11-106.

Figure 11-106. Connect Spark Plug Leads.

Prepare the Engine for Operation

The engine is now completely reassembled. Before starting or operating the engine, be sure to do the following.

1. Make sure all hardware is tightened securely.
2. Make sure the oil drain plugs, oil sentry pressure switch, and a new oil filter are installed.
3. Fill the crankcase with the correct amount, weight, and type of oil. Refer to oil recommendations and procedures in the ''Safety and General Information'' and ''Lubrication System'' sections.
4. Adjust the carburetor, idle fuel needle, or idle speed adjusting screw as necessary. Refer to Section 5, the "Fuel System and Governor".

Testing the Engine

It is recommended that the engine be operated on a test stand or bench prior to installation in the piece of equipment.

1. Set the engine up on a test stand. Install an oil pressure gauge. Start the engine and check to be certain that oil pressure (20 psi or more) is present. Run the engine at idle for 2-3 minutes, then 5-6 minutes more between idle and midrange. Adjust the carburetor mixture settings as necessary (as available).
2. Adjust the idle speed screw and high-speed stop as necessary. Make sure the maximum engine speed does not exceed 3750 RPM (no load).

Section 12
Clutch

Clutch

General

Some engines are equipped with a “wet” disc type clutch. See Figure 12-1 for exploded view of clutch.

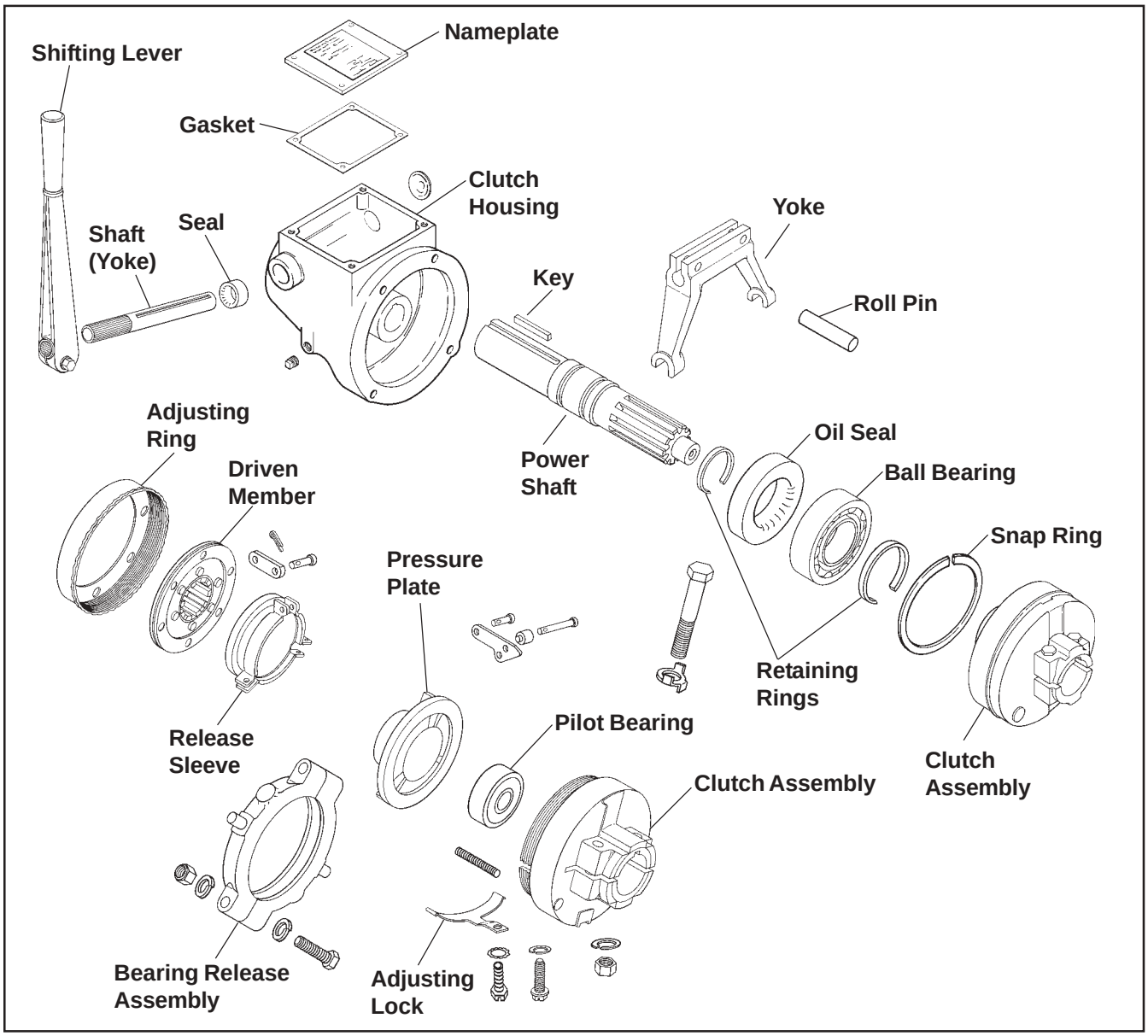

Figure 12-1. Wet Type Clutch - Exploded View.

Service

On this type, an oil "splash" type lubrication system is used. The proper oil level must be maintained to provide efficient lubrication. The oil should be changed after each 100 hours of operation. When refilling, use 0.47 L (1 pt.) of motor oil of proper viscosity. See chart below.

Temperature	SAE Viscosity
Above 10°C (50°F)	SAE 30
-17.8°C (0°F) to 10°C (50°F)	SAE 20
Below -17.8°C (0°F)	SAE 10

Adjustment

Slight readjustment may be needed after a few hours on a new clutch to accommodate normal run-in wear. Firm pressure should be required to engage clutch (40-45 pounds pull at lever handle). Readjust if clutch slips and overheats, or if clutch handle jumps out after engagement. Use the following procedure:

1. Release clutch and remove nameplate. Using a large screwdriver, turn adjusting ring clockwise, one notch at a time, until firm pressure is required to engage clutch. See Figure 12-2. Adjusting ring is spring loaded and does not have to be loosened before adjustment is made. Do not attempt to pry or force spring lock away from the ring.

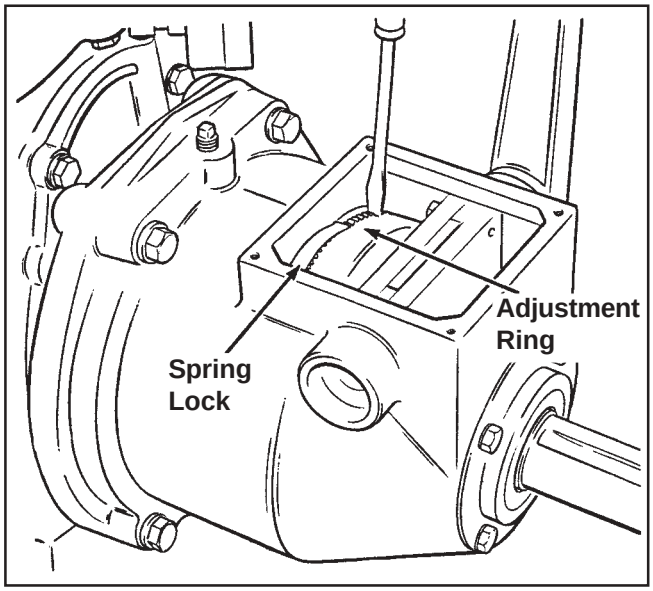

Figure 12-2. Adjusting Clutch.

2. After adjustment is made, engage clutch and check to make sure rollers go over center to lock the unit in engaged position and prevent releasing under load. If trouble persists after readjustment, clutch reconditioning is indicated.

Reconditioning

Drain the oil, remove the nameplate, and use the following procedure.

1. Remove capscrews (2) from clutch yoke and remove spacers.
2. Remove cross shaft.
3. Remove housing bolts (4) and slide housing off.
4. Loosen bolts securing clutch assembly to crankshaft, then remove locking screw.
5. Pull clutch assembly off.
6. To replace clutch, simply turn adjusting collar off and remove plate.

Reverse procedure for reassembly. Adjust and lubricate following previous instructions.

KOHLER ENGINES

FORM NO.:	TP-2428-C
ISSUED:	4/92
REVISED:	3/06

LITHO IN U.S.A.

FOR SALES AND SERVICE INFORMATION
IN U.S. AND CANADA, CALL **1-800-544-2444**

ENGINE DIVISION, KOHLER CO., KOHLER, WISCONSIN 53044

1PTP-2428-C

6 50531 40829 7