ML15KSPV

MERIT® SERIES

Variable Capacity | Side Discharge | R-454B | 60Hz

RESIDENTIAL
PRODUCT SPECIFICATIONS (EHB)

SEER2 up to 17.7
HSPF2 up to 9.6
1.5 to 5 Tons
Cooling Capacity - 17,900 to 55,000 Btuh
Heating Capacity - 18,000 to 55,000 Btuh

MERIT® SERIES

ENERGY STAR

MODEL NUMBER IDENTIFICATION

ML 15 K S P V - 036 - 230 A 01

- **Product Tier** — ML = Merit® Series
- **Nominal SEER2** — 15 = Nominal 15.0 SEER
- **Refrigerant Type** — K = R-454B
- **Configuration** — S = Side Discharge
- **Unit Type** — P = Heat Pump
- **Cooling Stages** — V = Variable Capacity Compressor
- **Nominal Cooling Capacity**
  - 018 = 1.5 tons
  - 024 = 2 tons
  - 030 = 2.5 tons
  - 036 = 3 tons
  - 042 = 3.5 tons
  - 048 = 4 tons
  - 060 = 5 tons
- **Voltage** — 230 = 208/230V-1 phase-60Hz
- **Ratings Revision Level**
- **Revision Level**

Form Number 211294 | June 2026
Supersedes all previous versions

CONTENTS

Approvals And Warranty 2
Control Options 5
Dimensions 8
Expanded Sound Data 4
Features 2
Installation Clearances 10
Model Number Identification. 1
Optional Accessories - Order Separately 4
Specifications 6
TXV Substitution - R-454B 12
TXV Usage. 12

APPROVALS AND WARRANTY

APPROVALS

- AHRI Certified to AHRI Standard 210/240-2023
- For AHRI Certified system match-ups and expanded ratings, visit www.LennoxPros.com
- ENERGY STAR® certified
- Sound rated to AHRI Standard 270-2008 test conditions
- Rated according to U.S. Department of Energy (DOE) test procedures
- Units and components UL, NEC, and CEC bonded for grounding to meet safety standards for servicing
- ETL certified (U.S. and Canada)
- ISO 9001 Registered Manufacturing Quality System

WARRANTY

- Compressor:
  - Limited five years in residential/non-residential installations
- All other covered components:
  - Limited five years in residential installations
  - Limited one year in non-residential installations

NOTE - Refer to Lennox® Basic Limited Warranty at www.Lennox.com for additional details.

FEATURES

APPLICATIONS

- 1.5 through 5 ton
- Sound levels as low as 57 dBA
- Single phase power supply (208/230V)
- Side discharge air
- Units shipped completely factory assembled, internally piped, and wired

NOTE - When heat pumps are used with gas furnaces, a dual-fuel compatible thermostat or a zone control system with dual-fuel capabilities must be used (order separately)

NOTE - Installer must set outdoor unit, connect refrigerant lines and make electrical connections to complete job.

REFRIGERATION SYSTEM

R-454B Refrigerant
- Low GWP (Global Warming Potential)
- Zero ODP (Ozone Depletion Potential)
- Low Toxicity/Lower Flammability - A2L

Outdoor Coil
- Aluminum fins fitted to copper tubes

Outdoor Fan
- Direct drive fan moves large air volumes uniformly through entire outdoor coil for high refrigeration capacity
- Fan guard provided

Refrigerant Line Connections, Service Valve
- Flare connection lines are located on side of unit cabinet
- Fully serviceable brass service valve prevents corrosion and provides access to refrigerant system

FEATURES

INDOOR REFRIGERANT DETECTION SYSTEM (RDS)

- Complies with UL 60335-2-40 approved standard
- Required for all systems using R-454B refrigerant
- Factory or field installed on all indoor units
- Consists of a RDS refrigerant detection sensor and a mitigation control in the indoor unit
- Ensures safe operation for systems equipped with R-454B refrigerant
- Indoor sensor will detect any R-454B refrigerant
- If R-454B refrigerant is detected, the refrigerant detection system will stop compressor operation and operate the blower to reduce concentrations in the conditioned space
- Once safe levels are reached the HVAC system will resume normal operation
- Refer to indoor unit Product Specifications documents for additional details

COMPRESSOR

Variable Capacity Rotary Compressor
- Compressor features high efficiency operation
- Balanced for reduced vibration and quiet operation
- Brushless DC motor uses powerful Neodymium magnets, which are approximately 15-20 times stronger than ferrite magnets used in conventional AC compressors

Compressor Crankcase Heater
- Protects against liquid refrigerant migration that can occur during low ambient operation

CONTROLS

DC Inverter Control
- Provides continuous operation, while adjusting capacity according to room temperature
- The accurate sensing of cooling loads prevents frequent changes in capacity and ensures efficient, economical operation

Inverter Module Protection
- Protects against differences in current, voltage and temperature
- Displays code on the indoor unit indicating a need for servicing

Outdoor Unit Microprocessor
- Electronic expansion valve control
- Automatic compressor timed-off protection (3 minutes)
- Temperature sensor
- LEDs on control display error codes and assist in troubleshooting
- 4-Way reversing valve control

Electronic Expansion Valve
- Furnished on all models for heating control

Compressor Overcurrent Protection
- Overcurrent protection can result due to any of the following:
  - Ambient temperature is too high
  - Locked rotor on the compressor
  - Outdoor air is blocked or restricted

Condenser High Temperature Protection
- Condenser high temperature can occur due to any of the following conditions:
  - High outdoor ambient
  - Outdoor fan blocked
  - Outdoor coil blocked
- The outdoor coil thermistor continuously monitors the temperature and communicates with the microprocessor
- Depending on the temperature measured, the compressor will be allowed to increase the frequency if needed to meet the load or is forced to run at the current or reduced frequency
- If the temperature becomes excessively high the compressor will be de-energized

Compressor Discharge Temperature Protection
- The compressor discharge line thermistor continuously monitors the temperature and communicates with the microprocessor
- Depending on the temperature measured, the compressor will be allowed to increase the frequency to meet the load or is forced to run at the current or reduced frequency
- If the temperature becomes excessively high, the compressor will be de-energized

Voltage Protection
- Protects unit from low or high voltage fluctuations

Terminal Strip
- Furnished for easy wiring connections

Defrost Control
- Defrost cycle is automatically enabled if there is a build-up of frost on the outdoor coil
- Outdoor fan operation is terminated during the defrost cycle
- Defrost LED is lit on the indoor unit panel on the front cover during a defrost cycle

Reversing Valve
- 4-way interchange reversing valve effects a rapid change in direction of refrigerant flow resulting in quick changeover from cooling to heating and vice versa
- Valve operates on pressure differential between outdoor unit and indoor unit of the system

Optional Accessories

Thermostat
- Thermostat is not furnished with unit
- See page 5

FEATURES

CABINET

- Constructed of heavy gauge steel
- Tabs on unit base allow secure mounting to slab
- Condensate drain outlets furnished on unit base

NOTE - Drain must be field furnished.

- Access cover for power and control wiring connections
- Access cover for service valves
- Rubber dampening pads (4)

Optional Accessories

Condenser Pad

- Provides permanent foundation for outdoor units
- One-piece lightweight structural foam and molded from high-density polyethylene (HDPE)
- Lightweight, easy to carry and install
- Textured finish provides a non-skid surface so outdoor unit sits securely in one place
- UV stable

Wind Baffle

- Front wind baffle increases unit reliability and performance in extremely cold temperature
- Protects the coil from high winds to prevent damage
- Required for low ambient cooling performance for mechanical or server room applications
- Recommended when unit is installed facing prevailing winds
- Heavy gauge galvanized steel
- Easy to install

Snow Hoods

- Side and back hoods
- Increases unit reliability and performance in extremely cold temperature
- Helps keep snow and ice from blocking the outdoor coil to prevent damage
- Protects coil from high winds
- Reduces defrost cycles and helps maintain a comfortable indoor temperature
- Heavy gauge galvanized steel
- Easy to install
- Recommended for cold climate heating and cooling applications

OPTIONAL ACCESSORIES - ORDER SEPARATELY

Description	Order Number	Size						
		018	024	030	036	042	048	060
Condenser Pad (24 x 48 x 3)	28V63	•	•	•	•	•	•	•
Wind Baffle	32F89	•	•					
	31J04			•	•			
	31J05					•	•	•
Snow Hoods	32F90	•	•					
	31J07			•	•			
	31J08					•	•	•

EXPANDED SOUND DATA

[1] Size	[1] Estimated Sound Pressure Level at Distance From Unit (dBA at distance in ft.)				
	3	5	10	15	50
018 Min.	51	46	40	37	26
018 Max.	63	58	52	49	38
024 Min.	51	46	40	37	26
024 Max.	64	59	53	50	39
030 Min.	50	45	39	36	25
030 Max.	66	61	55	52	41
036 Min.	50	45	39	36	25
036 Max.	67	62	56	53	42
042 Min.	50	45	39	36	25
042 Max.	68	63	57	54	43
048 Min.	50	45	39	36	25
048 Max.	69	64	58	55	44
060 Min.	55	50	44	41	30
060 Max.	70	65	59	56	45

[1] Estimated sound pressure level at distance based on AHRI Standard 275-2010 method for equipment located on the ground, roof, or on side of building wall with no adjacent reflective surface within 9.8 feet. Sound pressure levels will increase based on changes to assumptions. For other applications, refer to AHRI Standard 275.

CONTROL OPTIONS

E40 Smart Wi-Fi Thermostat

- 3 Htg.-2 Clg.
- 7-day, universal, programmable, touchscreen thermostat
- Controls dehumidification during cooling mode and humidification during heating mode
- Smooth Setback Recovery and compressor short-cycle protection
- One-Touch Away Mode, Smart Away™ (geo-fencing), equipment maintenance reminders and scheduling
- Smart home automation compatible with Amazon Alexa®, Google Assistant, Control4®, Building36®, Matter and IFTTT
- Lennox® Home App controls temperature, fan operation, set programs/schedules and set Away mode on a smartphone
- Lennox Smart Tech App allows the installer to commission the system and remotely turn the system on and off during setup or service call on a smartphone

M40 Smart Wi-Fi Thermostat

- 3 Htg.-2 Clg.
- 7-day, universal, programmable, touchscreen thermostat
- Smooth Setback Recovery and compressor short-cycle protection
- One-Touch Away Mode, Smart Away™ (geo-fencing), equipment maintenance reminders and scheduling
- Smart home automation compatible with Amazon Alexa®, Google Assistant, Control4®, Building36®, Matter and IFTTT
- Lennox® Home App controls temperature, fan operation, set programs/schedules and set Away mode on a smartphone
- Lennox Smart Tech App allows the installer to commission the system and remotely turn the system on and off during setup or service call on a smartphone

NOTE - Please refer to the individual Product Specifications for these products for full information.

CONTROLS - ORDERING

E40 Smart Wi-Fi Thermostat	5 x 7-1/2 x 1	**30L26**
M40 Smart Wi-Fi Thermostat	3-3/8 x 5-3/8 x 1	**30L27**
Thermostat Accessories		
[1] Discharge Air Temperature Sensor (For E40)		**88K38**
[2] Remote Outdoor Air Temperature Sensor (For dual-fuel and Humiditrol®)		**X2658**

[1] Optional for service diagnostics (E40).

[2] Remote Outdoor Air Temperature Sensor is used with conventional (non-Lennox® Communicating) outdoor units (sensor is furnished with Lennox® Communicating outdoor units). Allows the thermostat to display outdoor temperature. Required in dual-fuel and Humiditrol® applications.

SPECIFICATIONS

Size		018	024	030	036
Nominal Size - Tons		1.5	2	2.5	3
Ambient Temperature Range - °F	Cooling	40°F - 125°F	40°F - 125°F	40°F - 125°F	40°F - 125°F
	Heating	0°F - 75°F	0°F - 75°F	0°F - 75°F	0°F - 75°F
Sound Data (low)	dBA	58	58	57	57
Refrigerant (15 ft. Line Set)	[1] Charge furnished (R-454B)	3 lbs, 4 oz.	3 lbs. 12 oz.	4 lbs, 8 oz.	4 lbs, 8 oz.
	Maximum line length with furnished charge - ft.	15	15	15	15
	Additional charge required per ft. - oz.	0.55	0.55	0.55	0.55
	Maximum line length - ft.	150	150	150	150
	Maximum height difference between indoor and outdoor unit - ft.	50	50	50	50
Compressor	Number and Type	(1) Variable Twin Rotary	(1) Variable Twin Rotary	(1) Variable Twin Rotary	(1) Variable Twin Rotary
	Refrigerant oil type	POE	POE	POE	POE
	Refrigerant oil charge - oz.	30.4	30.4	30.4	30.4
Connections	Liquid OD (flare) - in.	3/8	3/8	3/8	3/8
	[2] Suction OD (flare) - in.	5/8	5/8	5/8	5/8
	Refrigerant line size - Liquid - in.	3/8 - same size as unit connection			
	[2] Refrigerant line size - Suction - in.	3/4	3/4	3/4	3/4
Outdoor Coil	Net face area - ft.² | Outer coil	6.43	6.43	7.22	9.64
	Inner coil - in.³ | Inner coil	93	93	182	182
	Tube diameter - mm	1/4	1/4	1/4	1/4
	Rows	1.5	1.5	2	2
	Fins - in.	18	18	18	18
	Fin type	Hydrophilic aluminum			
	Tube type	Seamless Copper Tube			
Outdoor Fan(s)	HP	0.12	0.12	0.21	0.21
	(Number) Diameter - in.	21-5/8	21-5/8	22-1/2	22-1/2
	Blades	3	3	3	3
	Total air volume - cfm	1990	1990	2530	2530
	Rpm	680	680	720	720
	Watts	90	90	160	160
Shipping/Net Data - lbs.		145/112	145/112	175/138	175/138

ELECTRICAL DATA

	Line voltage data (Volts-Phase-Hz)	208/230-1-60	208/230-1-60	208/230-1-60	208/230-1-60
	[3] Maximum Overcurrent Protection (MOCP) amps	20	20	30	30
	[4] Minimum circuit ampacity (MCA)	18	18	20	20
Compressor	Rated Load Amps	13.0	13.0	14.5	14.5
Fan Motor	Rated load amps	1.0	1.0	1.2	1.2

NOTE - Extremes of operating range are plus and minus 10% of line voltage.

[1] Refrigerant charge sufficient for 15 ft. line set length For longer line set requirements see the Installation Instructions or unit Charging Label for information about line set length and additional refrigerant charge required.

[2] Line set sizes for Suction Line (unit to line set):
018 - 5/8 to 3/4 in.
024 - 5/8 to 3/4 in.
030 - 5/8 to 3/4 in.
036 - 5/8 to 7/8 in.

[3] HACR type circuit breaker or fuse.

[4] Refer to National or Canadian Electrical Code manual to determine wire, fuse and disconnect size requirements.

SPECIFICATIONS

Size		042	048	060
Nominal Size - Tons		3.5	4	5
Ambient Temperature Range - °F	Cooling	40°F - 125°F	40°F - 125°F	40°F - 125°F
	Heating	0°F - 75°F	0°F - 75°F	0°F - 75°F
Sound Data (low)	dBA	57	57	62
Refrigerant (15 ft. Line Set)	[1] Charge furnished (R-454B)	6 lbs. 11 oz.	7 lbs. 6 oz.	8 lbs. 1 oz.
	Maximum line length with furnished charge - ft.	15	15	15
	Additional charge required per ft. - oz.	0.55	0.55	0.55
	Maximum line length - ft.	100	100	100
	Maximum height difference between indoor and outdoor unit - ft.	50	50	50
Compressor	Number and Type	(1) Variable Twin Rotary	(1) Variable Twin Rotary	(1) Variable Twin Rotary
	Refrigerant oil type	POE	POE	POE
	Refrigerant oil charge - oz.	29.4	29.4	47.3
Connections	Liquid OD (flare) - in.	3/8	3/8	3/8
	[2] Suction OD (flare) - in.	3/4	3/4	3/4
	Refrigerant line size - Liquid - in.	3/8 - same size as unit connection		
	[2] Refrigerant line size - Suction - in.	7/8	7/8	7/8
Outdoor Coil	Net face area - ft.² | Outer coil	9.64	9.64	9.64
	Inner coil - in.³ | Inner coil	238	238	271
	Tube diameter - mm	1/4	1/4	1/4
	Rows	2	2	3
	Fins - in.	18	18	18
	Fin type	Hydrophilic aluminum		
	Tube type	Seamless Copper Tube		
Outdoor Fan(s)	HP	0.27	0.27	0.27
	(Number) Diameter - in.	25-1/4	25-1/4	25-1/4
	Blades	3	3	3
	Total air volume - cfm	3590	3590	3650
	Rpm	700	700	720
	Watts	200	200	200
Shipping/Net Data - lbs.		223/178	224/179	255/211

ELECTRICAL DATA

	Line voltage data (Volts-Phase-Hz)	208/230-1-60	208/230-1-60	208/230-1-60
	[3] Maximum Overcurrent Protection (MOCP) amps	35	35	40
	[4] Minimum circuit ampacity (MCA)	26	26	32
Compressor	Rated Load Amps	19.0	19.0	24.0
Fan Motor	Rated load amps	1.5	1.5	1.5

NOTE - Extremes of operating range are plus and minus 10% of line voltage.

[1] Refrigerant charge sufficient for 15 ft. line set length For longer line set requirements see the Installation Instructions or unit Charging Label for information about line set length and additional refrigerant charge required.

[2] Line set sizes for Suction Line (unit to line set):
042 - 3/4 to 7/8 in.
048 - 3/4 to 7/8 in.
060 - 3/4 to 7/8 in.

[3] HACR type circuit breaker or fuse.

[4] Refer to National or Canadian Electrical Code manual to determine wire, fuse and disconnect size requirements.

DIMENSIONS

ML15KSPV-018-024-030-036

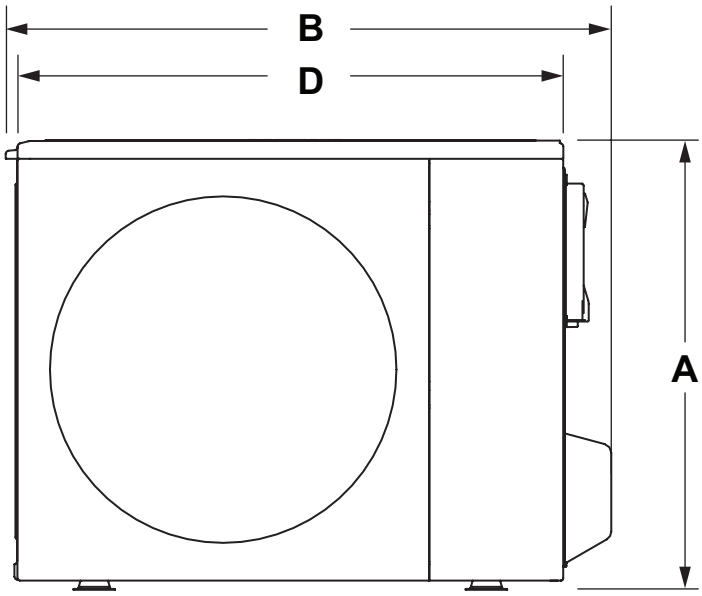

FRONT VIEW

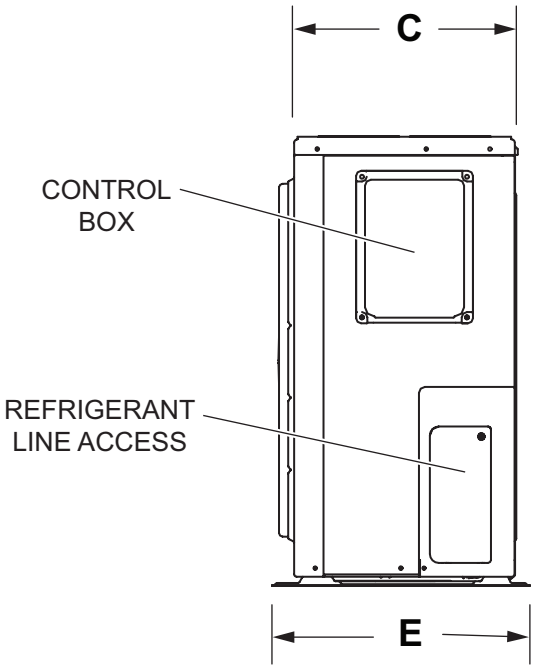

SIDE VIEW

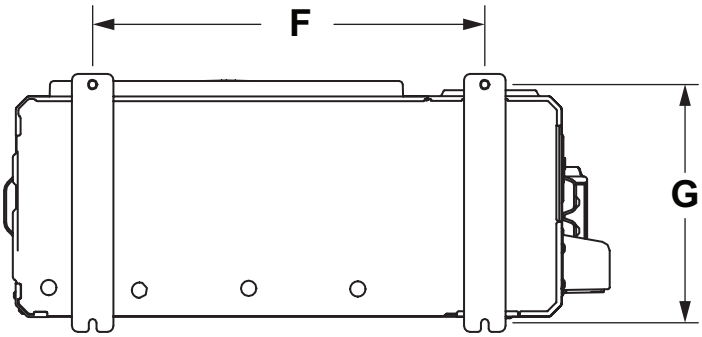

BOTTOM VIEW

Model	A (Height)		B (Width)		C (Depth)		D		E		F		G	
	in.	mm	in.	mm	in.	mm	in.	mm	in.	mm	in.	mm	in.	mm
018-024	27-1/2	699	39	990	13-3/8	340	35	889	16-1/8	410	24-7/8	630	14-1/2	370
030-036	30-1/8	770	40-1/8	1019	14-5/8	370	36-1/4	920	17-1/8	440	26	660	15-3/4	400

DIMENSIONS

ML15KSPV-042-048-060

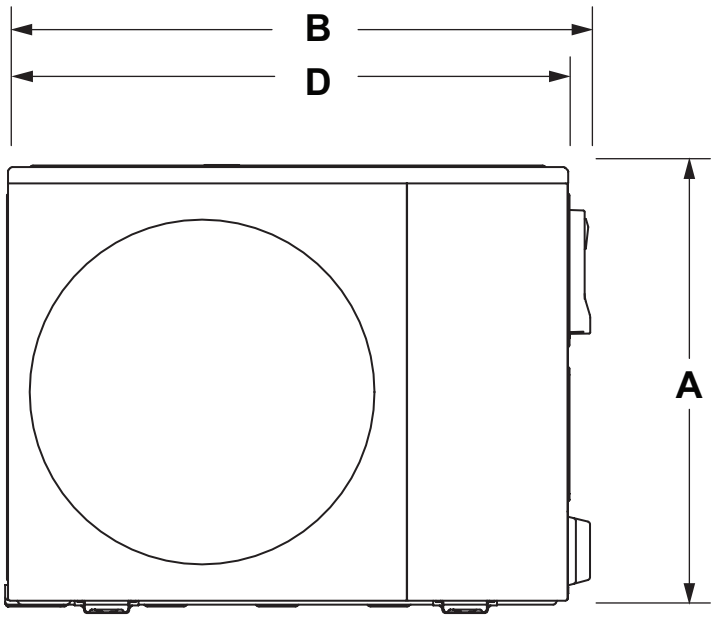

FRONT VIEW

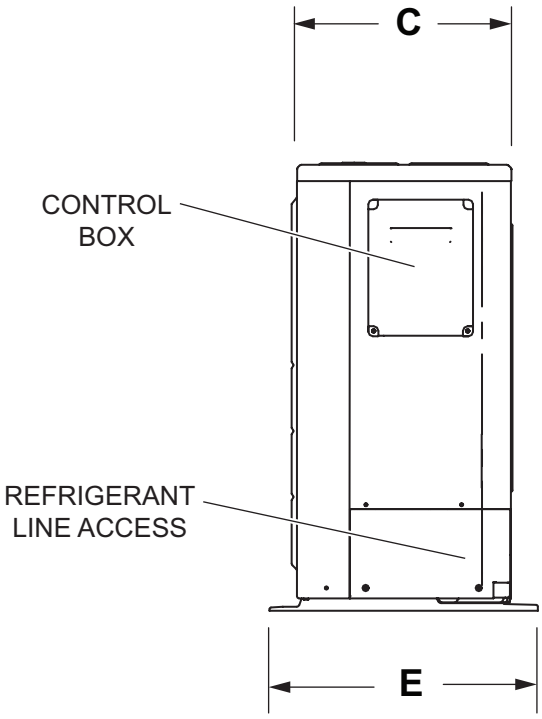

SIDE VIEW

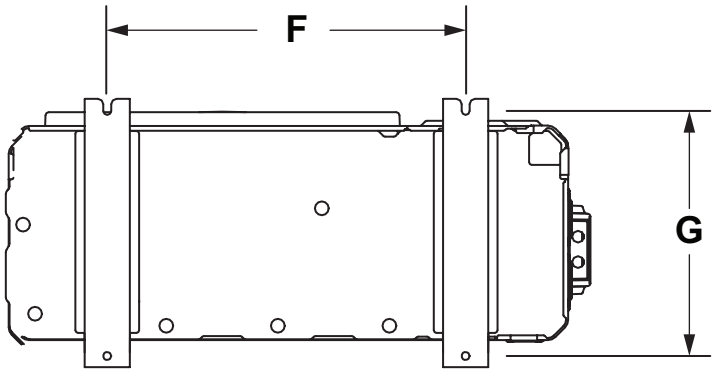

BOTTOM VIEW

Model	A (Height)		B (Width)		C (Depth)		D		E		F		G	
	in.	mm	in.	mm	in.	mm	in.	mm	in.	mm	in.	mm	in.	mm
042-048-060	33	838	43-1/8	1100	15-3/4	400	41-3/8	1050	19-7/8	510	26-1/2	673	18-1/8	460

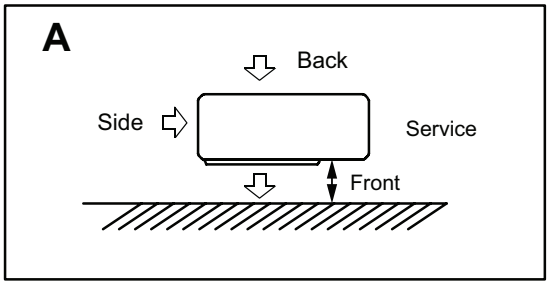

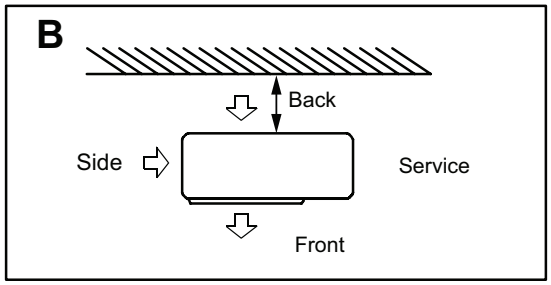

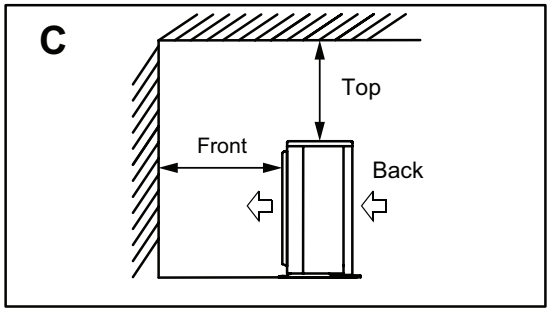

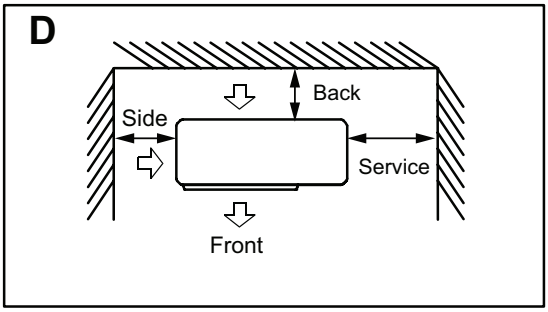

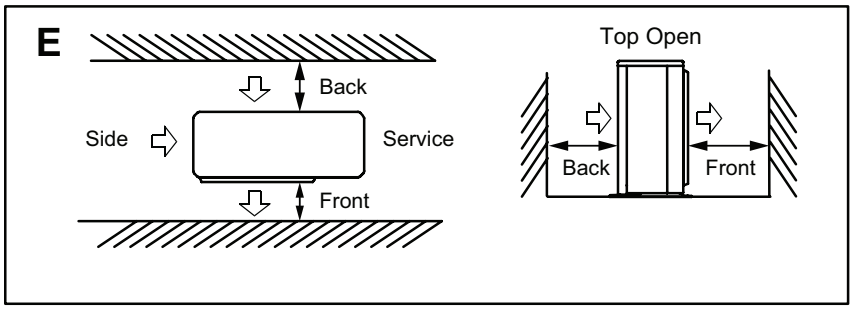

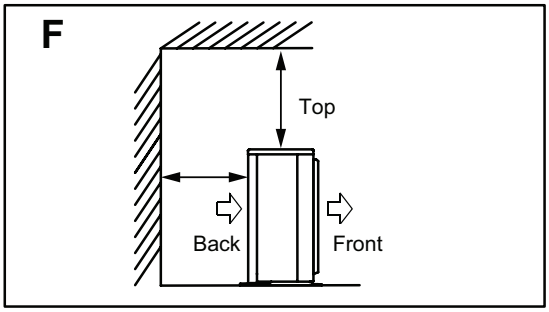

Location	A		B		C		D		E		F	
	in.	mm	in.	mm	in.	mm	in.	mm	in.	mm	in.	mm
Service	30	770	30	770	30	770	30	770	30	770	30	770
Front	14	360	Open		14	360	Open		40	1020	Open	
Back	Open		4	110	Open		4	110	4	110	4	110
Side	Open		Open		Open		12	310	Open		Open	
Top	Open		Open		40	1020	20	510	Open		20	510

NOTE: At least one side should be unobstructed by a wall or other barrier. Barriers on at least one side of the front and back shall be lower than the outdoor unit.

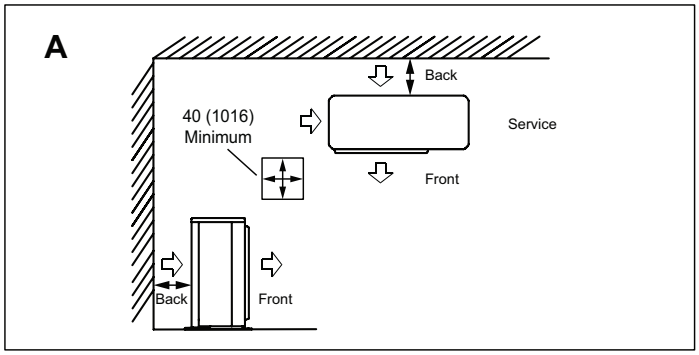

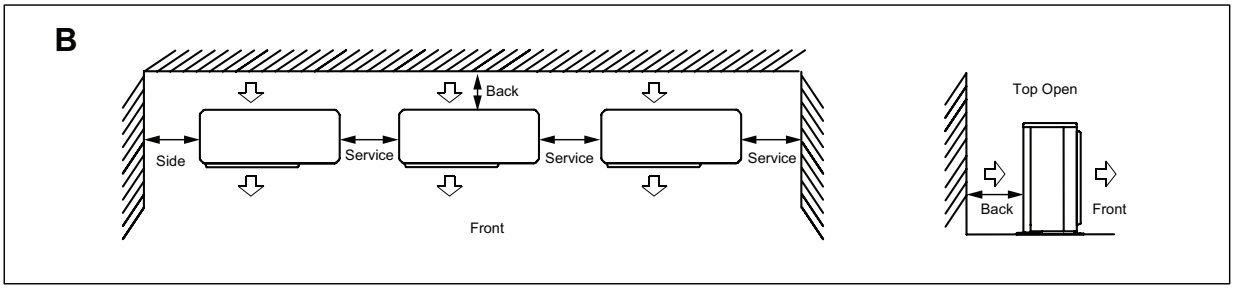

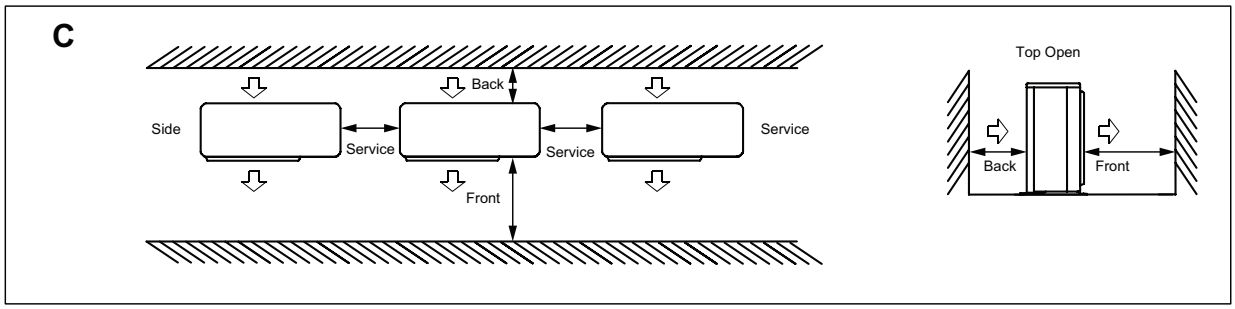

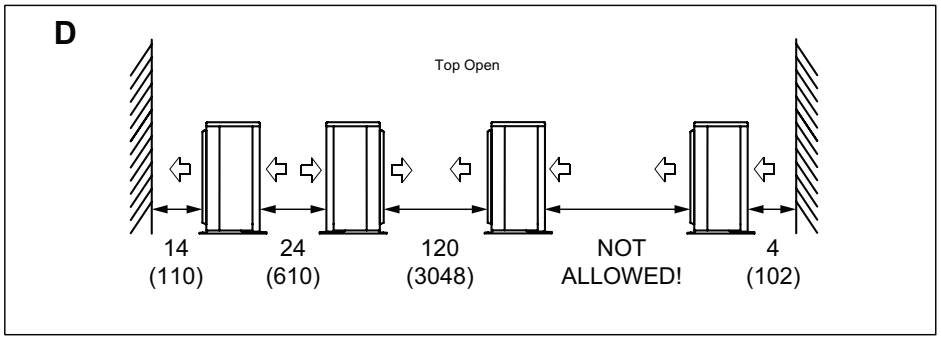

Location	A		B		C		D	
	in.	mm	in.	mm	in.	mm	in.	mm
Service	30	770	30	770	30	770	30	770
Front	Open		Open		14	360	As Shown	
Back	4	110	8	200	8	200	As Shown	
Side	As Shown		12	310	Open		12	310
Top	Open		Open		Open		Open	

NOTE: At least one side should be unobstructed by a wall or other barrier. Barriers on at least one side of the front and back shall be lower than the outdoor unit.

TXV USAGE

All Lennox coils and air handlers are shipped with a factory installed TXV. In most cases, no substitution is needed.
If a different size TXV is required, it will be listed in the "TXV SUBSTITUTION" table by size. The correct TXV must be ordered separately and field installed.

Size	Order Number
018	**26Z70**
024	**26Z70**
030	**26Z70**
036	**26Z70**
042	**26Z71**
048	**26Z71**
060	**26Z72**

AHRI STANDARD 210/240-2023

Standard Ratings relating to cooling or heating capacities shall be net values, including the effects of circulating-fan heat, but not including supplementary electric heat. Power input used for calculating efficiency shall be the Total Power.

Standard Ratings of units which do not have indoor air-circulating fans furnished as part of the model, i.e., Coil-only System, shall be established by subtracting from the total cooling capacity 1,505 Btu/h per 1,000 SCFM, and by adding the same amount to the heating capacity for non-mobile-home, non-Space Constrained units. Total Power for both heating and cooling shall be increased by 441 W per 1,000 SCFM of indoor air circulated.

TXV SUBSTITUTION - R-454B

A general guide for replacing the factory installed R-454B TXV if the indoor unit (coil/air handler) is larger or smaller than the outdoor unit.

Outdoor Unit		Indoor Unit		Indoor TXV Furnished	Indoor TXV Replacement
Size	Tons	Size	Tons		
018	1.5	42	3.5	**26Z71**	**26Z70**
018	1.5	48	4	**26Z71**	**26Z70**
018	1.5	49	4	**26Z71**	**26Z70**
018	1.5	50/60	4/5	**26Z71**	**26Z70**
018	1.5	51/61	4/5	**26Z71**	**26Z70**
018	1.5	60	5	**26Z72**	**26Z70**
024	2	42	3.5	**26Z71**	**26Z70**
024	2	48	4	**26Z71**	**26Z70**
024	2	49	4	**26Z71**	**26Z70**
024	2	50/60	4/5	**26Z71**	**26Z70**
024	2	51/61	4/5	**26Z71**	**26Z70**
024	2	60	5	**26Z72**	**26Z70**
030	2.5	42	3.5	**26Z71**	**26Z70**
030	2.5	48	4	**26Z71**	**26Z70**
030	2.5	49	4	**26Z71**	**26Z70**
030	2.5	50/60	4/5	**26Z71**	**26Z70**
030	2.5	51/61	4/5	**26Z71**	**26Z70**
030	2.5	60	5	**26Z72**	**26Z70**
036	3	42	3.5	**26Z71**	**26Z70**
036	3	48	4	**26Z71**	**26Z70**
036	3	49	4	**26Z71**	**26Z70**
036	3	50/60	4/5	**26Z71**	**26Z70**
036	3	51/61	4/5	**26Z71**	**26Z70**
036	3	60	5	**26Z72**	**26Z70**
042	3.5	24	2	**26Z70**	**26Z71**
042	3.5	30	2.5	**26Z70**	**26Z71**
042	3.5	30/36	2.5/3	**26Z70**	**26Z71**
042	3.5	36	3	**26Z70**	**26Z71**
042	3.5	60	5	**26Z72**	**26Z71**
048	4	30/36	2.5/3	**26Z70**	**26Z71**
048	4	36	3	**26Z70**	**26Z71**
048	4	60	5	**26Z72**	**26Z71**
060	5	50/60	4/5	**26Z71**	**26Z72**
060	5	51/61	4/5	**26Z71**	**26Z72**

TXV Ranges:

26Z70 - 1.5 to 3 ton systems - Use on 3 ton (036) and lower systems.

26Z71 - 3.5-4 ton systems - Use on 4 ton (048) and down to 3.5 ton (042) systems.

26Z72 - 5 ton systems - Use on 5 ton (060) systems only.

AHRI CERTIFIED®
www.ahridirectory.org
Unitary Small HP
AHRI Standard 210/240
Certification applies only when the complete system is listed with AHRI.

HRAI MEMBER COMPANY

C ETL LISTED US
Intertek

PFAS

LENNOX®

Visit us at www.Lennox.com
For the latest technical information, www.LennoxPros.com
Contact us at 1-800-9-LENNOX

NOTE - Due to Lennox' ongoing commitment to quality, Specifications, Ratings and Dimensions subject to change without notice and without incurring liability.
Improper installation, adjustment, alteration, service or maintenance can cause property damage or personal injury.
Installation and service must be performed by a qualified installer and servicing agency.

©2026 Lennox Industries, Inc.