CBK43UHET

MERIT® Series

Upflow/Horizontal | Constant Torque Motor | TXV Furnished | R-454B | 60Hz

RESIDENTIAL
PRODUCT SPECIFICATIONS (EHB)

1.5 to 5 Tons
115V or 208/230V
Optional Electric Heat - 4 to 20 kW

MERIT® SERIES

LENNOX QUANTUM™ COIL

MODEL NUMBER IDENTIFICATION

CB K 43 UH E T - 036 - DV - 01

Unit Type
CB = Air Handler

Refrigerant Type
K = R-454B

Series
43 = Quantum™ Coil

Position
UH = Upflow/Horizontal

Blower Motor
E = High Efficiency Constant Torque

Revision Level
01 = 1st Revision

Dual Voltage
DV = 115V or 208-230V-1 phase-60hz

Nominal Cooling Capacity
018 = 1.5 tons
024 = 2 tons
030 = 2.5 tons
036 = 3 tons
042 = 3.5 tons
048 = 4 tons
060 = 5 tons

Metering Device
T = Factory installed Check/Expansion Valve for R-454B refrigerant (non-bleed port)

Form Number 211278 | April 2026
Supersedes all previous versions

FEATURE HIGHLIGHTS

1. Quantum™ Coil
2. Refrigerant Line Connections
3. Check and Expansion Valve
4. Power Saver™ Constant Torque Blower Motor
5. Blower Control Board
6. Heavy Gauge Steel Cabinet
7. Anti-Microbial Dual Position Drain Pans
8. Air Filter
9. Electric Heat (option for 208/230V only)

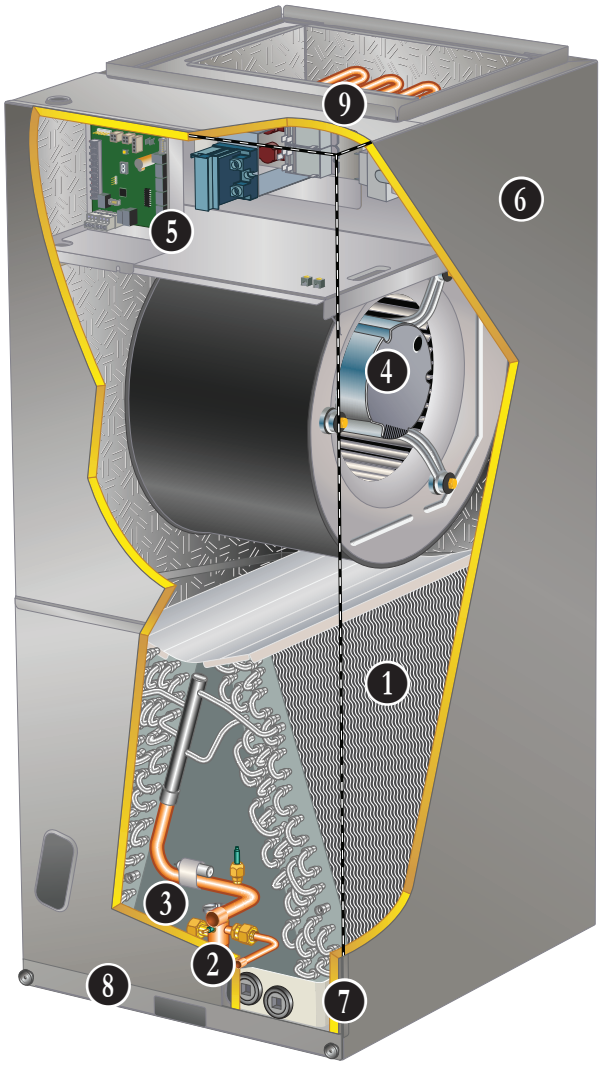

CONTENTS

Approvals And Warranty 3
Blower Data 9
Control Options 6
Dimensions 17
- Accessories 19
- Unit - Horizontal Position 18
- Unit - Upflow Position 17
Electrical Data 8
Electric Heat Data 12
Features 3
Indoor Air Quality Product Options 6
Installation Clearances With Electric Heat 11
Model Number Identification. 1
Optional Accessories - Order Separately 8
Replacement Circuit Breakers 11
Specifications 8

APPROVALS AND WARRANTY

APPROVALS

- Tested with matching air conditioners and heat pump units in the Lennox Research Laboratory environmental test room in accordance with AHRI Standard 210/240-2023
- AHRI Certified system match-ups and expanded ratings, visit www.LennoxPros.com
- ETL Listed to US and Canadian safety standards and components within are bonded for grounding to meet safety standards for servicing required by NEC and CEC
- All models meet UL 60335-2-40 Refrigerant Detector Requirements
- Optional electric heaters are ETL listed and rated in accordance with US Department of Energy (DOE) test procedures and Federal Trade Commission (FTC) labeling regulations
- Blower performance data according to unit tests conducted in Lennox air test chamber
- Approved for installation in manufactured housing and mobile homes
- ISO 9001 Registered Manufacturing Quality System

WARRANTY

- All covered components
  - Limited five years in residential applications
  - Limited one year in non-residential applications

NOTE - Refer to Lennox® Basic Limited Warranty at www.Lennox.com for additional details.

FEATURES

APPLICATIONS

- 1.5 to 5 ton nominal sizes
- Upflow or horizontal applications
- Reduced cabinet height allows installations with shorter height requirements and tight spaces

NOTE - Downflow applications require optional conversion kit.

- Applicable to expansion valve systems in cooling applications and check and expansion valve systems in heat pump applications
- Wide-range check and expansion valve is factory installed
- Optional field installed electric heaters are available in several sizes for additive heating capacity (208/230V applications only)

Dual-Voltage

- Unit can operate at either 115V or 208/230V-1 phase-60hz
- Conversion to 115V is a simple wiring harness change

REFRIGERANT SYSTEM

1 Quantum™ Coil

- Lennox designed and fabricated coil
- Enhanced aluminum alloy tube/enhanced fin coil for superior corrosion resistance
- Aluminum tubing, hairpins, distributor and header tubes.
- Ripple-edged aluminum fins
- Twin coil construction assembled in a “A” configuration for large surface area
- Provides excellent heat transfer and low air resistance for maximum efficiency
- Precise circuiting for uniform refrigerant distribution
- Lanced fins provide maximum exposure of fin surface to air stream
- Helical grooved tubing provides superior heat transfer
- Coil thoroughly factory tested under high pressure to ensure leakproof construction

2 Refrigerant Line Connections

- Copper refrigerant sweat connections on both liquid and suction lines for easy brazing
- Lines extend outside of the cabinet for ease of connection
- See dimension drawings for locations

Braze-Free/Press Fitting Flexibility

- Units can accommodate braze-free or press fittings for installation versatility

3 R-454B Check and Expansion Valve

- For use with R-454B systems
- Wide range valve with Chatleff style fitting
- Factory installed on all models, internal to cabinet

BLOWER

4 Power Saver™ Constant Torque Blower Motor

- Programmable high efficiency multi-speed blower motor
- By maintaining constant torque output, blower motor can deliver more uniform (but not constant) airflow over the static pressure range
- Programmable multi-speed operation is achieved by the use of an ECM (Electronically Commutated Motor) motor
- Leadless blower motor features simple plug-in connections
- Up to nine blower speeds are available for precise airflow adjustment.
- Blower speed change is easily accomplished by a simple DIP switch adjustment
- See blower Data tables

BLOWER (Continued)

Blower Assembly
- Each blower is statically and dynamically balanced as an assembly before installation in the unit
- Blower motor is resiliently mounted to blower assembly
- Blower slides out of cabinet for servicing

REFRIGERANT DETECTION SYSTEM (RDS)

- Complies with UL 60335-2-40 approved standard
- Required for all systems using R-454B refrigerant
- Consists of a factory installed Refrigerant Detection System (RDS) sensor and a Refrigerant Detection System (RDS) Blower Control Board

Refrigerant Detection System (RDS) Air Handler Sensor
- Sensor ensures safe operation for systems equipped with R-454B refrigerant
- Indoor sensor will detect any R-454B refrigerant

NOTE - Sensor must be repositioned for horizontal-right, horizontal-left, and downflow applications.

5 Blower Control Board
- Connected to the RDS sensor
- Used as interface between indoor unit and thermostat to control system
- Ensures safe operation for systems equipped with R-454B refrigerant
- If R-454B refrigerant is detected, the refrigerant detection system will stop compressor and/or heating operation and operate the blower to reduce concentrations in the conditioned space
- Once safe levels are reached the HVAC system will resume normal operation
- Display LED - Seven segment LED displays alphanumeric information related to diagnostics as well as system operation and status
- Diagnostic codes are held in non-volatile memory, immune from power interruptions
- Alarm relay can trigger an external alarm if R-454B refrigerant is detected
- Zone relay opens all zone dampers (if part of a zoning system) if R-454B refrigerant is detected
- Power is disabled to thermostat to prevent demand if R-454B refrigerant is detected
- On system start-up, blower will run for five minutes and any thermostat demands are disabled
- Terminal strip furnished

NOTE - Refer to the Installation Instructions for additional information.

CONTROLS

Transformer
- 24 volt transformer furnished as standard
- Factory installed in the unit control box

Optional Accessories

Thermostat
- Thermostat is not furnished with unit
- See page 6

CABINET

6
- Constructed of heavy gauge galvanized steel
- Pre-painted cabinet finish
- Completely insulated with foil faced fiberglass insulation
- Removable panels provide complete service access
- Filter access door for easy filter replacement
- Thumbscrews hold filter door in place
- Electrical inlets provided in sides and top of cabinet
- See dimension drawing for locations
- Plugs in cabinet for drain connections for upflow (left and right) and horizontal applications
- See dimension drawing

Low Leakage Cabinet
- All models have less than 2% air leakage and meet ANSI/ASHRAE Standard 193-2010 “Method of Test for Determining the Air Tightness of HVAC Equipment”

Upflow/Horizontal Capability (Optional Downflow)
- Shipped for upflow and horizontal right-hand discharge
- May be field converted to horizontal left-hand air discharge by repositioning horizontal drain pan
- Optional downflow kit required for field conversion

7 Anti-Microbial Dual Position Drain Pans
- Anti-Microbial additive resists growth of mold and mildew on drain pan which improves indoor air quality and reduces drain line blockage
- Drain pans designed for upflow or horizontal applications
- Deep, corrosion resistant high temperature engineered polymer drain pans have dual pipe drains
- See dimension drawing

FEATURES

CABINET (Continued)

Optional Accessories

Downflow Conversion Kit
- Required for field conversion to downflow position
- Kit consists of insulated drain pan drip shields, coil drip shields, seal plates and support brackets for repositioning coil and drain pan

Horizontal Support Frame Kit
- Provides support of unit in horizontal applications
- Consists of (2) 1 x 1-1/2 x 32-5/8 in. and (2) 1 x 3 x 53-7/8 in. painted heavy gauge cold rolled steel support channels with assembly and suspending holes
- Bolts and nuts furnished for field assembly
- Suspending rods must be field provided

Side Return Unit Stand (Upflow Only)
- Raises unit 16 in. above floor for side return air duct connection
- Eliminates need for wooden platform construction
- All aluminum construction
- Two adjustable frames fit all sizes

Wall Hanging Bracket Kit (Upflow Only)
- Allows unit to be hung on wall at any height
- Consists of heavy-gauge steel support brackets (one for air handler, one for wall mount)
- Screws furnished for fastening one bracket to unit
- Bolts for fastening one bracket to wall are field provided

High Performance Economizer
(Commercial Applications Only)
- Designed for applications requiring outdoor air to be utilized in a commercial HVAC system
- Allows the entry of fresh outdoor air for free cooling, reducing the requirement for mechanical cooling
- Heavy gauge galvanized steel cabinet lined with thick fiberglass insulation
- Mixed air sensor, outdoor air sensor and 24VAC transformer furnished
- Approved for California Title 24 building standards
- ASHRAE 90.1-2010 compliant
- See separate Product Specifications document for additional information and available control and sensor options

FILTER

8
- Disposable 1 inch filter is furnished
- Filter rack furnished in cabinet for easy filter installation
- See Specifications tables for filter sizes

OPTIONAL ELECTRIC HEAT

NOTE - Electric Heat can only be installed for 208/230V applications!
Not available for 115V applications!

9
- ETL listed
- Field install internal to unit cabinet
- Available in several kW sizes
- See Electric Heat tables
- Helix wound nichrome heating elements exposed directly in air stream resulting in instant heat transfer, low element temperatures and long service life
- Each element equipped with accurately located limit control with fixed temperature off setting and automatic reset
- Thermal sequencer relay brings elements on and off line, in sequence and equal increments, with time delay between each
- Heating control relay(s) furnished as standard
- Factory assembled with controls installed and wired
- Electric heat control wiring plugs into mating connector on air handler unit

Circuit Breaker (CB) Models
- All “CB” model heaters are equipped with circuit breakers for overload and short circuit protection
- Factory wired and mounted on electric heat unit
- Current sensitive and temperature actuated
- Manual reset
- Flexible plastic circuit breaker cover protects circuit breaker in areas with high humidity or unconditioned areas to prevent nuisance tripping
- Circuit breakers qualify as disconnect means at unit in many areas, eliminate the need for field provided disconnect
- Consult local electrical code in your area

Optional Accessories

Single-Point Power Source Control Box
- Control Box may be used with optional electric heat when single power supply is connected to multi-circuit electric heat
- Field installs external to the unit cabinet on either side or top
- Constructed of heavy gauge steel, baked enamel finish, pre-punched mounting holes, electrical inlet knockouts, and terminal strip
- Removeable cover provides easy access
- Dimensions (H x W x D) - 7 x 7 x 4 in.

INDOOR AIR QUALITY PRODUCT OPTIONS

Healthy Climate® PureAir® Air Purification System

- Filtration - The Carbon Clean 16® (MERV 16) media filter captures more than 95% of particles 0.3 microns and larger and more than 90% of particles 0.01 microns and larger
- Highest airflow performance and lowest pressure drop when compared to a leading brand.
- Long life filters up to 1 year

Healthy Climate® Media Air Cleaner

- High performance in a narrow 7 in. cabinet
- Available with MERV 11, 13, or 16 rated filters
- Multi-position heavy gauge steel cabinet will support furnace/coil or air handler and associated duct work
- Tool-less entry
- Tool-less assembly for quick installation

Healthy Climate® Whole Home In Duct Air Purifiers

- Compact Duct Mounted Design
- Effective against odors and VOC's
- Certified Ozone free
- UVC lamp and carbon cells

Healthy Climate® Ultraviolet Germicidal Lights

- Compact duct mounted design
- Single or dual applications
- Certified ozone free
- Effective against odors to help keep the system clean
- Safety Interlocks (Additional UVC Compliance Kit for UL 60335-2-40 is available for A2L applications)
- Low power consumption
- Available for 24V or 110/230V
- Up to 1340 microwatts /cm² output (dual lamp model)

NOTE - Please refer to the individual Product Specifications for these products for full information.

CONTROL OPTIONS

E40 Smart Wi-Fi Thermostat

- 3 Htg.-2 Clg.
- 7-day, universal, programmable, touchscreen thermostat
- Controls dehumidification during cooling mode and humidification during heating mode
- Smooth Setback Recovery and compressor short-cycle protection
- One-Touch Away Mode, Smart Away™ (geo-fencing), equipment maintenance reminders and scheduling
- Smart home automation compatible with Amazon Alexa®, Google Assistant, Control4®, Building36®, Matter and IFTTT
- Lennox® Home App controls temperature, fan operation, set programs/schedules and set Away mode on a smartphone
- Lennox Smart Tech App allows the installer to commission the system and remotely turn the system on and off during setup or service call on a smartphone

L40 Smart Wi-Fi Thermostat

- 2 Htg.-1 Clg.
- 7-day, universal, programmable, touchscreen thermostat
- Provides temperature control for gas, electric and heat pumps for single-stage heating or cooling systems (including dual-fuel operation)
- One-Touch Away Mode, Smart Away™ (geo-fencing), equipment maintenance reminders and scheduling
- Smooth Setback Recovery and compressor short-cycle protection
- Smart home automation compatible with Amazon Alexa®, Google Assistant, Control4®, Building36®, Matter and IFTTT
- Lennox® Home App controls temperature, fan operation, set programs/schedules and set Away mode on a smartphone
- Lennox Smart Tech App allows the installer to commission the system and remotely turn the system on and off during setup or service call on a smartphone

M40 Smart Wi-Fi Thermostat

- 3 Htg.-2 Clg.
- 7-day, universal, programmable, touchscreen thermostat
- Smooth Setback Recovery and compressor short-cycle protection
- One-Touch Away Mode, Smart Away™ (geo-fencing), equipment maintenance reminders and scheduling
- Smart home automation compatible with Amazon Alexa®, Google Assistant, Control4®, Building36®, Matter and IFTTT
- Lennox® Home App controls temperature, fan operation, set programs/schedules and set Away mode on a smartphone
- Lennox Smart Tech App allows the installer to commission the system and remotely turn the system on and off during setup or service call on a smartphone

NOTE - Please refer to the individual Product Specifications for these products for full information.

INDOOR AIR QUALITY PRODUCT OPTIONS - ORDERING

NOTE - Refer to the individual Product Specifications documents for additional accessories and maintenance items.

Description	Dimensions	Matching Air Handler	Order Number
PureAir® S Air Purification System			
PCO3S-14-16	21-1/8 x 8-3/4 x 23-3/4	- - -	**Y8905**
PCO3S-16-16	17-1/2 x 8-3/4 x 26-1/2	- - -	**Y8904**
PCO3S-20-16	21-1/8 x 8-3/4 x 26-1/2	- - -	**Y8903**
Healthy Climate® Media Air Cleaner			
HCC10-22 (Cabinet)	18-1/2 x 21-1/8 x 7	CBK45UH(E/P)T-018-024-030	**26Z81**
HCF10-16 (Filter) MERV 16	17 x 21 x 5		**26Z88**
HCF10-11 (Filter) MERV 11	17 x 21 x 5		**26Z85**
HCC19-22 (Cabinet)	21-1/2 x 22-3/4 x 7	CBK45UH(E/P)T-036-042-048-060	**26Z82**
HCF19-16 (Filter) MERV 16	20 x 22 x 5		**26Z91**
HCF19-11 (Filter) MERV 11	20 x 22 x 5		**26Z89**
Healthy Climate® Whole Home In Duct Air Purifiers			
HCWHAP1	8 x 7 x 16.5	- - -	**23V99**
Healthy Climate® Ultraviolet Germicidal Lights			
UVC-24V (24V) 17-1/2 in.	Ballast 4-3/4 x 2-1/4 x 2	- - -	**X9423**
UVC-41W-S (110/230V) 17-1/2 in.	Ballast 11-3/4 x 2-3/4 x 1-5/8	- - -	**X9424**
UVC-41W-D (110/230V) 17-1/2 in.	Ballast 11-3/4 x 2-3/4 x 1-5/8	- - -	**X9425**

CONTROLS - ORDERING

E40 Smart Wi-Fi Thermostat	3-3/8 x 5-3/8 x 1	- - -	**30L26**
Lennox® Smart Room Sensor	4 x 5-1/2 x 3	- - -	**22V25**
Lennox® Smart Air Quality Monitor	3-5/8 x 4-3/8 x 1-3/8	- - -	**21P02**
Lennox® Wireless Extender	4 x 5-1/2 x 2-1/2	- - -	**22V26**
[1] L40 Smart Wi-Fi Thermostat	2-13/16 x 2-13/16 x 1/4	- - -	**27V51**
M40 Smart Wi-Fi Thermostat	3-5/16 x 4-5/16 x 7/8	- - -	**30L27**
Thermostat Accessories			
[2] Discharge Air Temperature Sensor (For E40)			**88K38**
[3] Remote Outdoor Air Temperature Sensor (For dual-fuel and Humiditrol®)			**X2658**

[1] All optional electric heat is controlled as a single stage of heating.
[2] Optional for service diagnostics (E40).
[3] Remote Outdoor Air Temperature Sensor is used with conventional (non-Lennox® Communicating) outdoor units (sensor is furnished with Lennox® Communicating outdoor units). Allows the thermostat to display outdoor temperature. Required in dual-fuel and Humiditrol® applications.

OPTIONAL ACCESSORIES - ORDER SEPARATELY

Downflow Conversion Kit	**31U56**
Electric Heat (208/230V applications only)	See Electric Heat Data Tables on page 12
Horizontal Support Frame Kit	**56J18**
Side Return Unit Stand (Upflow Only)	**45K32**
Single-Point Power Source Control Box (for Electric Heat)	**21H39**
Wall Hanging Bracket Kit (Upflow Only)	**45K30**
High Performance Economizer (Commercial Only)	**10U53**

SPECIFICATIONS — 1.5 TO 3 TON

Size		018	024	030	036
Nominal Tonnage		1.5	2	2.5	3
Refrigerant Type		R-454B	R-454B	R-454B	R-454B
Factory Installed Expansion Valve (TXV)		**26Z70**	**26Z70**	**26Z70**	**26Z70**
Connections	Liquid line (OD) sweat - in.	3/8	3/8	3/8	3/8
	Suction line (OD) sweat - in.	3/4	3/4	3/4	3/4
	Condensate drain (FPT) - in.	(2) 3/4	(2) 3/4	(2) 3/4	(2) 3/4
Indoor Coil	Net face area - ft.^{2}	3.31	3.31	3.31	3.78
	Tube diameter - in.	3/8	3/8	3/8	3/8
	Rows	4	4	4	4
	Fins - in.	15	15	15	15
Blower	HP	1/2	1/2	1/2	1/2
	Wheel nominal diameter x width - in.	10 x 8	10 x 8	10 x 8	10 x 8
	Air volume range - cfm	143-933	131-1089	192-1279	376-1466
[1] **Filters**	Size - in.	15 x 20 x 1	15 x 20 x 1	15 x 20 x 1	15 x 20 x 1
Shipping Data - lbs.		134	134	134	144

ELECTRICAL DATA

Line voltage data (Volts-1 Phase- 60Hz)	115V	208/230V	115V	208/230V	115V	208/230V	115V	208/230V
[2] Maximum overcurrent protection (MOCP) amps (unit)	15	15	15	15	15	15	15	15
[3] Minimum circuit ampacity (MCA) (unit)	8	5	8	5	8	5	8	5
Blower Motor Full Load Amps	6.0	3.9	6.0	3.9	6.0	3.9	6.0	3.9

SPECIFICATIONS — 3.5 TO 5 TON

Size		042	048	060
Nominal Tonnage		3.5	4	5
Refrigerant Type		R-454B	R-454B	R-454B
Factory Installed Expansion Valve (TXV)		**26Z71**	**26Z71**	**26Z72**
Connections	Liquid line (OD) sweat - in.	3/8	3/8	3/8
	Suction line (OD) sweat - in.	7/8	7/8	7/8
	Condensate drain (FPT) - in.	(2) 3/4	(2) 3/4	(2) 3/4
Indoor Coil	Net face area - ft.^{2}	4.25	4.72	5.67
	Tube diameter - in.	3/8	3/8	3/8
	Rows	4	4	4
	Fins - in.	15	15	15
Blower	HP	3/4	1	1
	Wheel nominal diameter x width - in.	11-1/2 x 10	11-1/2 x 10	11-1/2 x 10
	Air volume range - cfm	461-1611	661-1912	794-2138
[1] **Filters**	Size - in.	18 x 20 x 1	18 x 20 x 1	18 x 20 x 1
Shipping Data - lbs.		158	165	182

ELECTRICAL DATA

Line voltage data (Volts-1 Phase- 60Hz)	115V	208/230V	115V	208/230V	115V	208/230V
[2] Maximum overcurrent protection (MOCP) amps (unit)	20	15	25	15	25	15
[3] Minimum circuit ampacity (MCA) (unit)	11.5	7.5	14.5	9.5	14.5	9.5
Blower Motor Full Load Amps	9.0	6.0	11.5	7.4	11.5	7.4

[1] Disposable filter.
[2] HACR type circuit breaker or fuse.
[3] Refer to National or Canadian Electrical Code manual to determine wire, fuse and disconnect size requirements. Use wires suitable for at least 167°F.

BLOWER DATA

CBK43UHET-018 PERFORMANCE

External Static Pressure in. w.g.	Standard CFM Air Volume / Watts at Various Blower Speeds																	
	Tap 1		Tap 2		Tap 3		Tap 4		Tap 5		Tap 6		Tap 7		Tap 8		Tap 9	
	SCFM	Watts	SCFM	Watts	SCFM	Watts	SCFM	Watts	SCFM	Watts	SCFM	Watts	SCFM	Watts	SCFM	Watts	SCFM	Watts
0.10	416	34	531	49	637	69	716	86	753	96	791	107	827	118	862	129	933	156
0.20	327	38	454	54	583	74	670	92	709	102	750	113	787	123	823	135	898	162
0.30	270	42	390	58	510	80	613	98	658	108	700	119	741	130	780	141	858	168
0.40	202	46	348	62	458	84	546	105	591	115	640	127	692	137	734	148	816	175
0.50	143	49	290	67	425	89	505	109	543	120	585	132	627	145	671	157	774	183
0.60	- - -	- - -	234	71	377	93	474	114	513	126	550	138	587	150	624	163	711	192
0.70	- - -	- - -	185	74	328	99	431	119	478	130	523	143	560	156	594	168	670	199
0.80	- - -	- - -	132	77	279	103	387	124	435	135	483	148	529	161	568	174	640	205
0.90	- - -	- - -	- - -	- - -	237	107	342	130	393	141	442	153	489	166	534	179	617	210
1.00	- - -	- - -	- - -	- - -	196	110	300	134	349	147	401	159	451	171	495	184	587	217

NOTE - All air data measured external to unit with dry coil and 1 inch non-pleated air filter in place.
Electric heaters have no appreciable air resistance.

CBK43UHET-024 PERFORMANCE

External Static Pressure in. w.g.	Standard CFM Air Volume / Watts at Various Blower Speeds																	
	Tap 1		Tap 2		Tap 3		Tap 4		Tap 5		Tap 6		Tap 7		Tap 8		Tap 9	
	SCFM	Watts	SCFM	Watts	SCFM	Watts	SCFM	Watts	SCFM	Watts	SCFM	Watts	SCFM	Watts	SCFM	Watts	SCFM	Watts
0.10	527	49	633	69	787	108	857	130	888	142	927	157	966	173	1004	189	1089	232
0.20	456	55	583	74	748	113	820	136	852	148	893	163	932	179	969	195	1057	238
0.30	389	58	509	80	702	119	779	142	814	153	856	169	897	185	935	201	1024	244
0.40	347	63	457	84	642	127	732	148	771	160	814	175	860	192	898	208	992	252
0.50	291	67	423	89	583	133	668	157	715	169	769	183	817	200	858	215	958	259
0.60	234	71	377	93	549	138	621	163	658	176	706	192	762	210	813	225	920	267
0.70	184	74	329	99	520	143	591	169	622	182	665	199	710	217	754	234	881	277
0.80	131	77	279	103	483	148	564	174	597	187	635	205	677	223	715	241	822	288
0.90	- - -	- - -	236	107	444	154	530	179	569	193	613	210	652	229	687	247	783	295
1.00	- - -	- - -	191	110	404	160	495	185	535	199	582	217	628	235	665	254	753	302

NOTE - All air data measured external to unit with dry coil and 1 inch non-pleated air filter in place.
Electric heaters have no appreciable air resistance.

CBK43UHET-030 PERFORMANCE

External Static Pressure in. w.g.	Standard CFM Air Volume / Watts at Various Blower Speeds																	
	Tap 1		Tap 2		Tap 3		Tap 4		Tap 5		Tap 6		Tap 7		Tap 8		Tap 9	
	SCFM	Watts	SCFM	Watts	SCFM	Watts	SCFM	Watts	SCFM	Watts	SCFM	Watts	SCFM	Watts	SCFM	Watts	SCFM	Watts
0.10	646	68	753	93	946	156	1020	188	1064	209	1106	230	1150	254	1190	280	1279	337
0.20	587	73	710	98	911	162	987	194	1031	215	1076	237	1120	261	1162	287	1250	345
0.30	514	79	650	104	873	167	951	200	999	221	1042	242	1090	266	1131	291	1223	352
0.40	461	84	581	111	824	174	907	206	963	227	1008	249	1056	273	1098	297	1193	356
0.50	425	88	535	116	780	182	867	214	918	235	967	256	1016	280	1061	305	1162	364
0.60	376	93	503	121	715	191	821	223	880	243	929	265	978	289	1027	314	1127	372
0.70	328	98	467	126	673	197	761	232	823	254	888	274	943	298	991	323	1092	381
0.80	278	102	421	131	642	203	722	239	776	262	829	285	892	310	955	333	1060	390
0.90	232	106	378	138	617	209	692	245	741	268	790	292	842	318	898	345	1025	401
1.00	192	109	335	142	589	214	669	251	715	274	760	299	807	325	858	354	976	414

NOTE - All air data measured external to unit with dry coil and 1 inch non-pleated air filter in place.
Electric heaters have no appreciable air resistance.

BLOWER DATA

CBK43UHET-036 PERFORMANCE

External Static Pressure in. w.g.	Standard CFM Air Volume / Watts at Various Blower Speeds																	
	Tap 1		Tap 2		Tap 3		Tap 4		Tap 5		Tap 6		Tap 7		Tap 8		Tap 9	
	SCFM	Watts	SCFM	Watts	SCFM	Watts	SCFM	Watts	SCFM	Watts	SCFM	Watts	SCFM	Watts	SCFM	Watts	SCFM	Watts
0.10	749	86	874	120	1115	212	1198	254	1241	279	1283	306	1326	333	1373	367	1466	438
0.20	703	92	839	125	1078	221	1164	264	1210	289	1253	315	1297	343	1345	377	1439	449
0.30	647	99	788	133	1052	227	1131	273	1178	299	1221	325	1264	354	1313	388	1409	461
0.40	595	104	740	140	1017	235	1108	279	1155	305	1200	332	1239	363	1285	398	1381	471
0.50	562	109	690	147	975	245	1075	288	1123	314	1170	341	1216	370	1268	404	1357	481
0.60	525	114	658	152	936	253	1034	298	1087	324	1139	350	1185	379	1239	414	1338	487
0.70	486	120	628	157	895	262	998	308	1049	335	1100	361	1152	390	1208	424	1310	498
0.80	448	126	592	164	853	270	963	317	1016	344	1066	372	1116	401	1174	435	1280	508
0.90	411	133	558	170	826	276	923	326	978	353	1034	381	1082	411	1141	446	1245	517
1.00	376	139	524	176	806	281	898	330	942	361	995	390	1048	421	1110	457	1195	516

NOTE - All air data measured external to unit with dry coil and 1 inch non-pleated air filter in place.
Electric heaters have no appreciable air resistance.

CBK43UHET-042 PERFORMANCE

External Static Pressure in. w.g.	Standard CFM Air Volume / Watts at Various Blower Speeds																	
	Tap 1		Tap 2		Tap 3		Tap 4		Tap 5		Tap 6		Tap 7		Tap 8		Tap 9	
	SCFM	Watts	SCFM	Watts	SCFM	Watts	SCFM	Watts	SCFM	Watts	SCFM	Watts	SCFM	Watts	SCFM	Watts	SCFM	Watts
0.10	954	126	1067	162	1388	307	1448	343	1480	364	1522	392	1570	423	1611	453	1705	528
0.20	897	136	1019	172	1352	318	1414	355	1447	376	1489	404	1538	435	1580	466	1675	543
0.30	798	147	947	184	1316	329	1380	366	1414	387	1457	415	1506	447	1546	478	1646	555
0.40	748	153	865	193	1276	342	1344	379	1379	400	1423	427	1474	460	1513	490	1616	568
0.50	712	158	822	199	1217	358	1299	394	1338	415	1387	442	1441	472	1480	503	1585	582
0.60	673	164	787	205	1134	373	1226	412	1275	432	1334	459	1399	489	1444	519	1553	595
0.70	620	172	753	211	1085	382	1158	425	1197	448	1251	479	1328	509	1385	539	1518	611
0.80	552	182	711	219	1050	389	1118	434	1152	457	1200	489	1256	525	1305	559	1460	632
0.90	503	191	658	227	1020	396	1086	441	1118	465	1164	498	1213	534	1259	570	1381	653
1.00	461	197	600	239	994	403	1058	450	1089	473	1134	507	1179	543	1225	579	1334	665

NOTE - All air data measured external to unit with dry coil and 1 inch non-pleated air filter in place.
Electric heaters have no appreciable air resistance.

CBK43UHET-048 PERFORMANCE

External Static Pressure in. w.g.	Standard CFM Air Volume / Watts at Various Blower Speeds																	
	Tap 1		Tap 2		Tap 3		Tap 4		Tap 5		Tap 6		Tap 7		Tap 8		Tap 9	
	SCFM	Watts	SCFM	Watts	SCFM	Watts	SCFM	Watts	SCFM	Watts	SCFM	Watts	SCFM	Watts	SCFM	Watts	SCFM	Watts
0.10	1092	178	1197	219	1617	450	1684	502	1721	531	1755	559	1790	590	1829	633	1912	716
0.20	1030	190	1140	229	1580	463	1649	516	1688	546	1722	574	1759	605	1798	645	1884	730
0.30	945	200	1070	242	1538	476	1611	530	1651	560	1685	588	1725	620	1767	659	1855	744
0.40	893	207	999	250	1497	490	1572	544	1613	575	1648	603	1688	635	1736	673	1826	759
0.50	854	213	954	257	1440	505	1519	559	1574	591	1599	618	1646	651	1704	687	1796	774
0.60	818	220	918	264	1385	520	1468	575	1519	607	1554	635	1598	668	1669	704	1764	790
0.70	780	227	884	270	1331	532	1414	590	1464	623	1505	651	1550	685	1628	722	1730	806
0.80	742	236	848	278	1281	540	1366	603	1414	636	1453	666	1497	701	1575	741	1688	827
0.90	703	243	815	287	1248	549	1321	611	1362	643	1406	676	1447	712	1521	756	1639	847
1.00	661	251	779	296	1216	558	1293	621	1335	654	1371	686	1406	720	1453	762	1586	865

NOTE - All air data measured external to unit with dry coil and 1 inch non-pleated air filter in place.
Electric heaters have no appreciable air resistance.

BLOWER DATA

CBK43UHET-060 PERFORMANCE

External Static Pressure in. w.g.	Air Volume / Watts at Various Blower Speeds																	
	Tap 1		Tap 2		Tap 3		Tap 4		Tap 5		Tap 6		Tap 7		Tap 8		Tap 9	
	SCFM	Watts	SCFM	Watts	SCFM	Watts	SCFM	Watts	SCFM	Watts	SCFM	Watts	SCFM	Watts	SCFM	Watts	SCFM	Watts
0.10	1222	224	1348	279	1775	562	1850	629	1889	667	1921	700	1961	741	1995	779	2138	949
0.20	1163	239	1294	295	1751	578	1828	645	1869	684	1902	716	1942	757	1975	795	2120	965
0.30	1094	251	1231	310	1714	597	1796	665	1841	703	1873	736	1917	778	1950	815	2095	979
0.40	1023	263	1167	323	1668	616	1754	684	1802	723	1837	756	1884	797	1918	836	2047	976
0.50	976	271	1101	335	1614	637	1706	705	1756	745	1792	778	1841	819	1879	856	1990	972
0.60	952	278	1060	343	1564	654	1654	726	1705	767	1742	800	1793	843	1832	879	1920	967
0.70	922	286	1036	351	1516	670	1609	744	1659	785	1696	819	1745	864	1784	902	1844	963
0.80	884	295	1010	359	1464	686	1561	761	1613	803	1653	837	1702	882	1741	922	1778	959
0.90	839	303	978	368	1416	700	1514	778	1565	820	1606	855	1656	900	1700	940	1713	956
1.00	794	311	940	377	1381	711	1470	793	1518	836	1560	873	1611	917	1646	949	1642	948

NOTE - All air data measured external to unit with dry coil and 1 inch non-pleated air filter in place.
Electric heaters have no appreciable air resistance.

INSTALLATION CLEARANCES WITH ELECTRIC HEAT

Cabinet	0 inch (0 mm)
To Plenum	0 inch (0 mm)
To Outlet Duct	0 inch (0 mm)
Floor	0 inch (0 mm)
Service / Maintenance	See Note #1

[1] 1 Front service access - 24 inches (610 mm) minimum.

NOTE - If cabinet depth is more than 24 inches (610 mm), allow a minimum of the cabinet depth plus 2 inches (51 mm).

REPLACEMENT CIRCUIT BREAKERS

Voltage	Description	Order Number
208/240V - 1 Phase	25 amp, 2 pole	**41K13**
	30 amp, 2 pole	**17K70**
	35 amp, 2 pole	**72K07**
	40 amp, 2 pole	**49K14**
	45 amp, 2 pole	**17K71**
	50 amp, 2 pole	**41K12**
	60 amp, 2 pole	**17K72**

ELECTRIC HEAT DATA — CBK43UHET-018 | SINGLE PHASE

	Electric Heat Model Number	Input			Blower Motor Full Load Amps	[2] Minimum Circuit Ampacity	[3] Maximum Overcurrent Protection
		Volt	kW	[1] Btuh			
4 kW	ECB45-4 (**27A08**) Terminal Block ECB45-4CB (**27A12**) 30A Circuit Breaker	208	3.0	10,250	3.9	23	[4] **25**
		220	3.4	11,450	3.9	24	[4] **25**
		230	3.7	12,550	3.9	25	[4] **25**
		240	4.0	13,650	3.9	26	30
5 kW	ECB45-5 (**27A09**) Terminal Block ECB45-5CB (**27A13**) 30A Circuit Breaker	208	3.6	12,300	3.9	27	30
		220	4.0	13,800	3.9	28	30
		230	4.4	15,000	3.9	29	30
		240	4.8	16,400	3.9	30	30
7.5 kW	ECB45-7.5 (**27A10**) Terminal Block ECB45-7.5CB (**27A14**) 45A Circuit Breaker	208	5.6	19,200	3.9	39	[4] **40**
		220	6.3	21,500	3.9	41	45
		230	6.9	23,500	3.9	42	45
		240	7.5	25,600	3.9	44	45
10 kW	ECB45-10 (**27A11**) Terminal Block ECB45-10CB (**27A15**) 60A Circuit Breaker	208	7.2	24,600	3.9	48	[4] **50**
		220	8.0	27,500	3.9	51	60
		230	8.8	30,000	3.9	53	60
		240	9.6	32,700	3.9	55	60

NOTE - Not for 115V applications.
NOTE - Circuit 1 Minimum Circuit Ampacity includes the Blower Motor Full Load Amps.
[1] Electric heater capacity only - does not include additional blower motor heat capacity.
[2] Refer to National or Canadian Electrical Code manual to determine wire, fuse and disconnect size requirements. Use wires suitable for at least 167°F.
[3] HACR type breaker or fuse.
[4] **Bold indicates that the circuit breaker on "CB" circuit breaker models must be replaced with size shown. See table on page 11.**

ELECTRIC HEAT DATA — CBK43UHET-024 | SINGLE PHASE

	Electric Heat Model Number	Input			Blower Motor Full Load Amps	[2] Minimum Circuit Ampacity	[3] Maximum Overcurrent Protection
		Volt	kW	[1] Btuh			
4 kW	ECB45-4 (**27A08**) Terminal Block ECB45-4CB (**27A12**) 30A Circuit Breaker	208	3.0	10,250	3.9	23	[4] **25**
		220	3.4	11,450	3.9	24	[4] **25**
		230	3.7	12,550	3.9	25	[4] **25**
		240	4.0	13,650	3.9	26	**30**
5 kW	ECB45-5 (**27A09**) Terminal Block ECB45-5CB (**27A13**) 30A Circuit Breaker	208	3.6	12,300	3.9	27	30
		220	4.0	13,800	3.9	28	30
		230	4.4	15,000	3.9	29	30
		240	4.8	16,400	3.9	30	30
7.5 kW	ECB45-7.5 (**27A10**) Terminal Block ECB45-7.5CB (**27A14**) 45A Circuit Breaker	208	5.6	19,200	3.9	39	[4] **40**
		220	6.3	21,500	3.9	41	45
		230	6.9	23,500	3.9	42	45
		240	7.5	25,600	3.9	44	45
10 kW	ECB45-10 (**27A11**) Terminal Block ECB45-10CB (**27A15**) 60A Circuit Breaker	208	7.2	24,600	3.9	48	[4] **50**
		220	8.0	27,500	3.9	51	60
		230	8.8	30,000	3.9	53	60
		240	9.6	32,700	3.9	55	60

NOTE - Not for 115V applications.
NOTE - Circuit 1 Minimum Circuit Ampacity includes the Blower Motor Full Load Amps.
[1] Electric heater capacity only - does not include additional blower motor heat capacity.
[2] Refer to National or Canadian Electrical Code manual to determine wire, fuse and disconnect size requirements. Use wires suitable for at least 167°F.
[3] HACR type breaker or fuse.
[4] **Bold indicates that the circuit breaker on "CB" circuit breaker models must be replaced with size shown. See table on page 11.**

	Electric Heat Model Number	Input			Blower Motor Full Load Amps	[2] Minimum Circuit Ampacity		[3] Maximum Overcurrent Protection		Single Point Power Source	
		Volt	kW	[1] Btuh		Ckt 1	Ckt 2	Ckt 1	Ckt 2	[2] Minimum Circuit Ampacity	[3] Maximum Overcurrent Protection
4 kW	ECB45-4 (**27A08**) Terminal Block ECB45-4CB (**27A12**) 30A Circuit Breaker	208	3.0	10,250	3.9	23	- - -	[4] **25**	- - -	- - -	- - -
		220	3.4	11,450	3.9	24	- - -	[4] **25**	- - -	- - -	- - -
		230	3.7	12,550	3.9	25	- - -	[4] **25**	- - -	- - -	- - -
		240	4.0	13,650	3.9	26	- - -	30	- - -	- - -	- - -
5 kW	ECB45-5 (**27A09**) Terminal Block ECB45-5CB (**27A13**) 30A Circuit Breaker	208	3.6	12,300	3.9	27	- - -	30	- - -	- - -	- - -
		220	4.0	13,800	3.9	28	- - -	30	- - -	- - -	- - -
		230	4.4	15,000	3.9	29	- - -	30	- - -	- - -	- - -
		240	4.8	16,400	3.9	30	- - -	30	- - -	- - -	- - -
7.5 kW	ECB45-7.5 (**27A10**) Terminal Block ECB45-7.5CB (**27A14**) 45A Circuit Breaker	208	5.6	19,200	3.9	39	- - -	[4] **40**	- - -	- - -	- - -
		220	6.3	21,500	3.9	41	- - -	45	- - -	- - -	- - -
		230	6.9	23,500	3.9	42	- - -	45	- - -	- - -	- - -
		240	7.5	25,600	3.9	44	- - -	45	- - -	- - -	- - -
10 kW	ECB45-10 (**27A11**) Terminal Block ECB45-10CB (**27A15**) 60A Circuit Breaker	208	7.2	24,600	3.9	48	- - -	[4] **50**	- - -	- - -	- - -
		220	8.0	27,500	3.9	51	- - -	60	- - -	- - -	- - -
		230	8.8	30,000	3.9	53	- - -	60	- - -	- - -	- - -
		240	9.6	32,700	3.9	55	- - -	60	- - -	- - -	- - -
12.5 kW	ECB45-12.5CB (**27A16**) (1) 50A and (1) 25A Circuit Breaker	208	9.4	32,000	3.9	42	19	[4] **45**	[4] **20**	61	70
		220	10.5	35,800	3.9	45	20	[4] **45**	[4] **20**	65	70
		230	11.5	39,200	3.9	46	21	50	25	67	70
		240	12.5	42,600	3.9	48	22	50	25	70	70
15 kW	ECB45-15CB (**27A17**) (1) 60A and (1) 25A Circuit Breaker	208	10.8	36,900	3.9	48	22	[4] **50**	25	70	70
		220	12.1	41,300	3.9	51	23	60	25	74	80
		230	13.2	45,100	3.9	53	24	60	25	77	80
		240	14.4	49,100	3.9	55	25	60	25	80	80

NOTE - Not for 115V applications.

NOTE - Circuit 1 Minimum Circuit Ampacity includes the Blower Motor Full Load Amps.

[1] Electric heater capacity only - does not include additional blower motor heat capacity.

[2] Refer to National or Canadian Electrical Code manual to determine wire, fuse and disconnect size requirements. Use wires suitable for at least 167°F.

[3] HACR type breaker or fuse.

[4] **Bold indicates that the circuit breaker on "CB" circuit breaker models must be replaced with size shown. See table on page 11.**

	Electric Heat Model Number	Input			Blower Motor Full Load Amps	[2] Minimum Circuit Ampacity		[3] Maximum Overcurrent Protection		Single Point Power Source	
		Volt	kW	[1] Btuh		Ckt 1	Ckt 2	Ckt 1	Ckt 2	[2] Minimum Circuit Ampacity	[3] Maximum Overcurrent Protection
4 kW	ECB45-4 (**27A08**) Terminal Block ECB45-4CB (**27A12**) 30A Circuit Breaker	208	3.0	10,250	3.9	23	- - -	[4] **25**	- - -	- - -	- - -
		220	3.4	11,450	3.9	24	- - -	[4] **25**	- - -	- - -	- - -
		230	3.7	12,550	3.9	25	- - -	[4] **25**	- - -	- - -	- - -
		240	4.0	13,650	3.9	26	- - -	30	- - -	- - -	- - -
5 kW	ECB45-5 (**27A09**) Terminal Block ECB45-5CB (**27A13**) 30A Circuit Breaker	208	3.6	12,300	3.9	27	- - -	30	- - -	- - -	- - -
		220	4.0	13,800	3.9	28	- - -	30	- - -	- - -	- - -
		230	4.4	15,000	3.9	29	- - -	30	- - -	- - -	- - -
		240	4.8	16,400	3.9	30	- - -	30	- - -	- - -	- - -
7.5 kW	ECB45-7.5 (**27A10**) Terminal Block ECB45-7.5CB (**27A14**) 45A Circuit Breaker	208	5.6	19,200	3.9	39	- - -	[4] **40**	- - -	- - -	- - -
		220	6.3	21,500	3.9	41	- - -	45	- - -	- - -	- - -
		230	6.9	23,500	3.9	42	- - -	45	- - -	- - -	- - -
		240	7.5	25,600	3.9	44	- - -	45	- - -	- - -	- - -
10 kW	ECB45-10 (**27A11**) Terminal Block ECB45-10CB (**27A15**) 60A Circuit Breaker	208	7.2	24,600	3.9	48	- - -	[4] **50**	- - -	- - -	- - -
		220	8.0	27,500	3.9	51	- - -	60	- - -	- - -	- - -
		230	8.8	30,000	3.9	53	- - -	60	- - -	- - -	- - -
		240	9.6	32,700	3.9	55	- - -	60	- - -	- - -	- - -
12.5 kW	ECB45-12.5CB (**27A16**) (1) 50A and (1) 25A Circuit Breaker	208	9.4	32,000	3.9	42	19	[4] **45**	[4] **20**	61	70
		220	10.5	35,800	3.9	45	20	[4] **45**	[4] **20**	65	70
		230	11.5	39,200	3.9	46	21	50	25	67	70
		240	12.5	42,600	3.9	48	22	50	25	70	70
15 kW	ECB45-15CB (**27A17**) (1) 60A and (1) 25A Circuit Breaker	208	10.8	36,900	3.9	48	22	[4] **50**	25	70	70
		220	12.1	41,300	3.9	51	23	60	25	74	80
		230	13.2	45,100	3.9	53	24	60	25	77	80
		240	14.4	49,100	3.9	55	25	60	25	80	80

NOTE - Not for 115V applications.

NOTE - Circuit 1 Minimum Circuit Ampacity includes the Blower Motor Full Load Amps.

[1] Electric heater capacity only - does not include additional blower motor heat capacity.

[2] Refer to National or Canadian Electrical Code manual to determine wire, fuse and disconnect size requirements. Use wires suitable for at least 167°F.

[3] HACR type breaker or fuse.

[4] **Bold indicates that the circuit breaker on "CB" circuit breaker models must be replaced with size shown. See table on page 11.**

ELECTRIC HEAT DATA — CBK43UHET-042 | SINGLE PHASE

Electric Heat Model Number		Input			Blower Motor Full Load Amps	[2] Minimum Circuit Ampacity		[3] Maximum Overcurrent Protection		Single Point Power Source	
		Volt	kW	[1] Btuh		Ckt 1	Ckt 2	Ckt 1	Ckt 2	[2] Minimum Circuit Ampacity	[3] Maximum Overcurrent Protection
4 kW	ECB45-4 (**27A08**) Terminal Block ECB45-4CB (**27A12**) 30A Circuit Breaker	208	3.0	10,250	6.0	26	- - -	30	- - -	- - -	- - -
		220	3.4	11,450	6.0	27	- - -	30	- - -	- - -	- - -
		230	3.7	12,550	5.8	27	- - -	30	- - -	- - -	- - -
		240	4.0	13,650	5.8	28	- - -	30	- - -	- - -	- - -
5 kW	ECB45-5 (**27A09**) Terminal Block ECB45-5CB (**27A13**) 30A Circuit Breaker	208	3.6	12,300	6.0	29	- - -	30	- - -	- - -	- - -
		220	4.0	13,800	6.0	30	- - -	30	- - -	- - -	- - -
		230	4.4	15,000	5.8	31	- - -	[4] **35**	- - -	- - -	- - -
		240	4.8	16,400	5.8	32	- - -	[4] **35**	- - -	- - -	- - -
7.5 kW	ECB45-7.5 (**27A10**) Terminal Block ECB45-7.5CB (**27A14**) 45A Circuit Breaker	208	5.6	19,200	6.0	41	- - -	45	- - -	- - -	- - -
		220	6.3	21,500	6.0	43	- - -	45	- - -	- - -	- - -
		230	6.9	23,500	5.8	45	- - -	45	- - -	- - -	- - -
		240	7.5	25,600	5.8	46	- - -	[4] **50**	- - -	- - -	- - -
10 kW	ECB45-10 (**27A11**) Terminal Block ECB45-10CB (**27A15**) 60A Circuit Breaker	208	7.2	24,600	6.0	51	- - -	60	- - -	- - -	- - -
		220	8.0	27,500	6.0	53	- - -	60	- - -	- - -	- - -
		230	8.8	30,000	5.8	55	- - -	60	- - -	- - -	- - -
		240	9.6	32,700	5.8	57	- - -	60	- - -	- - -	- - -
12.5 kW	ECB45-12.5CB (**27A16**) (1) 50A and (1) 25A Circuit Breaker	208	9.4	32,000	6.0	45	19	[4] **45**	[4] **20**	64	70
		220	10.5	35,800	6.0	47	20	50	[4] **20**	67	70
		230	11.5	39,200	5.8	49	21	50	25	70	70
		240	12.5	42,600	5.8	51	22	[4] **60**	25	72	80
15 kW	ECB45-15CB (**27A17**) (1) 60A and (1) 25A Circuit Breaker	208	10.8	36,900	6.0	51	22	60	25	73	80
		220	12.1	41,300	6.0	53	23	60	25	76	80
		230	13.2	45,100	5.8	55	24	60	25	79	80
		240	14.4	49,100	5.8	57	25	60	25	82	90

NOTE - Not for 115V applications.

NOTE - Circuit 1 Minimum Circuit Ampacity includes the Blower Motor Full Load Amps.

[1] Electric heater capacity only - does not include additional blower motor heat capacity.

[2] Refer to National or Canadian Electrical Code manual to determine wire, fuse and disconnect size requirements. Use wires suitable for at least 167°F.

[3] HACR type breaker or fuse.

[4] **Bold indicates that the circuit breaker on "CB" circuit breaker models must be replaced with size shown. See table on page 11.**

ELECTRIC HEAT DATA — CBK43UHET-048 | CBK43UHET-060 | SINGLE PHASE

	Electric Heat Model Number	Input			Blower Motor Full Load Amps	[2] Minimum Circuit Ampacity		[3] Maximum Overcurrent Protection		Single Point Power Source	
		Volt	kW	[1] Btuh		Ckt 1	Ckt 2	Ckt 1	Ckt 2	[2] Minimum Circuit Ampacity	[3] Maximum Overcurrent Protection
4 kW	ECB45-4 (**27A08**) Terminal Block ECB45-4CB (**27A12**) 30A Circuit Breaker	208	3.0	10,250	7.4	27	- - -	30	- - -	27	30
		220	3.4	11,450	7.4	28	- - -	30	- - -	28	30
		230	3.7	12,550	7.2	29	- - -	30	- - -	29	30
		240	4.0	13,650	7.2	30	- - -	30	- - -	30	30
5 kW	ECB45-5 (**27A09**) Terminal Block ECB45-5CB (**27A13**) 30A Circuit Breaker	208	3.6	12,300	7.4	31	- - -	[4] **35**	- - -	31	35
		220	4.0	13,800	7.4	32	- - -	[4] **35**	- - -	32	35
		230	4.4	15,000	7.2	33	- - -	[4] **35**	- - -	33	35
		240	4.8	16,400	7.2	34	- - -	[4] **35**	- - -	34	35
7.5 kW	ECB45-7.5 (**27A10**) Terminal Block ECB45-7.5CB (**27A14**) 45A Circuit Breaker	208	5.6	19,200	7.4	43	- - -	45	- - -	43	45
		220	6.3	21,500	7.4	45	- - -	45	- - -	45	45
		230	6.9	23,500	7.2	46	- - -	[4] **50**	- - -	46	50
		240	7.5	25,600	7.2	48	- - -	[4] **50**	- - -	48	50
10 kW	ECB45-10 (**27A11**) Terminal Block ECB45-10CB (**27A15**) 60A Circuit Breaker	208	7.2	24,600	7.4	53	- - -	60	- - -	53	60
		220	8.0	27,500	7.4	55	- - -	60	- - -	55	60
		230	8.8	30,000	7.2	57	- - -	60	- - -	57	60
		240	9.6	32,700	7.2	59	- - -	60	- - -	59	60
12.5 kW	ECB45-12.5CB (**27A16**) (1) 50A and (1) 25A Circuit Breaker	208	9.4	32,000	7.4	47	19	50	[4] **20**	66	70
		220	10.5	35,800	7.4	49	20	50	[4] **20**	69	70
		230	11.5	39,200	7.2	51	21	[4] **60**	25	71	80
		240	12.5	42,600	7.2	52	22	[4] **60**	25	74	80
15 kW	ECB45-15CB (**27A17**) (1) 60A and (1) 25A Circuit Breaker	208	10.8	36,900	7.4	53	22	60	25	74	80
		220	12.1	41,300	7.4	55	23	60	25	78	80
		230	13.2	45,100	7.2	57	24	60	25	81	90
		240	14.4	49,100	7.2	59	25	60	25	84	90
20 kW	ECB45-20CB (**27A18**) (1) 60A and (1) 50A Circuit Breaker	208	14.4	49,200	7.4	53	43	60	[4] **45**	96	100
		220	16.1	55,000	7.4	55	46	60	50	101	110
		230	17.6	60,100	7.2	57	48	60	50	105	110
		240	19.2	65,500	7.2	59	50	60	50	109	110

NOTE - Not for 115V applications.

NOTE - Circuit 1 Minimum Circuit Ampacity includes the Blower Motor Full Load Amps.

[1] Electric heater capacity only - does not include additional blower motor heat capacity.

[2] Refer to National or Canadian Electrical Code manual to determine wire, fuse and disconnect size requirements. Use wires suitable for at least 167°F.

[3] HACR type breaker or fuse.

[4] **Bold indicates that the circuit breaker on "CB" circuit breaker models must be replaced with size shown. See table on page 11.**

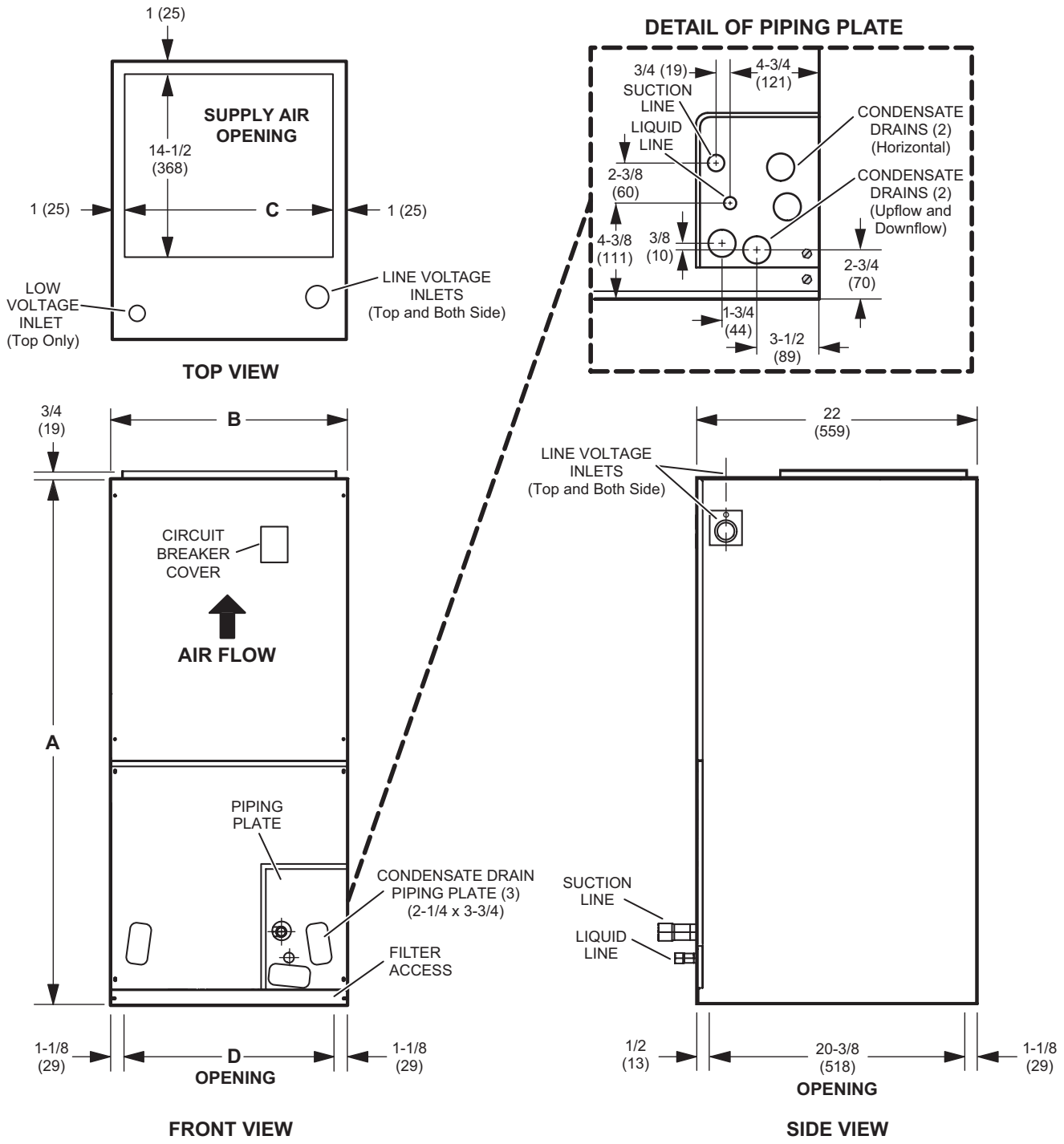

Dimensions	018, 024, 030		036		042		048		060	
	in.	mm	in.	mm	in.	mm	in.	mm	in.	mm
A	41-1/2	1054	43-1/2	1105	45-1/2	1156	47	1194	53-5/8	1362
B	18-1/2	470	18-1/2	470	21-1/2	546	21-1/2	546	21-1/2	546
C	16-1/2	419	16-1/2	419	19-1/2	495	19-1/2	495	19-1/2	495
D	16-1/4	413	16-1/4	413	19-1/4	489	19-1/4	489	19-1/4	489

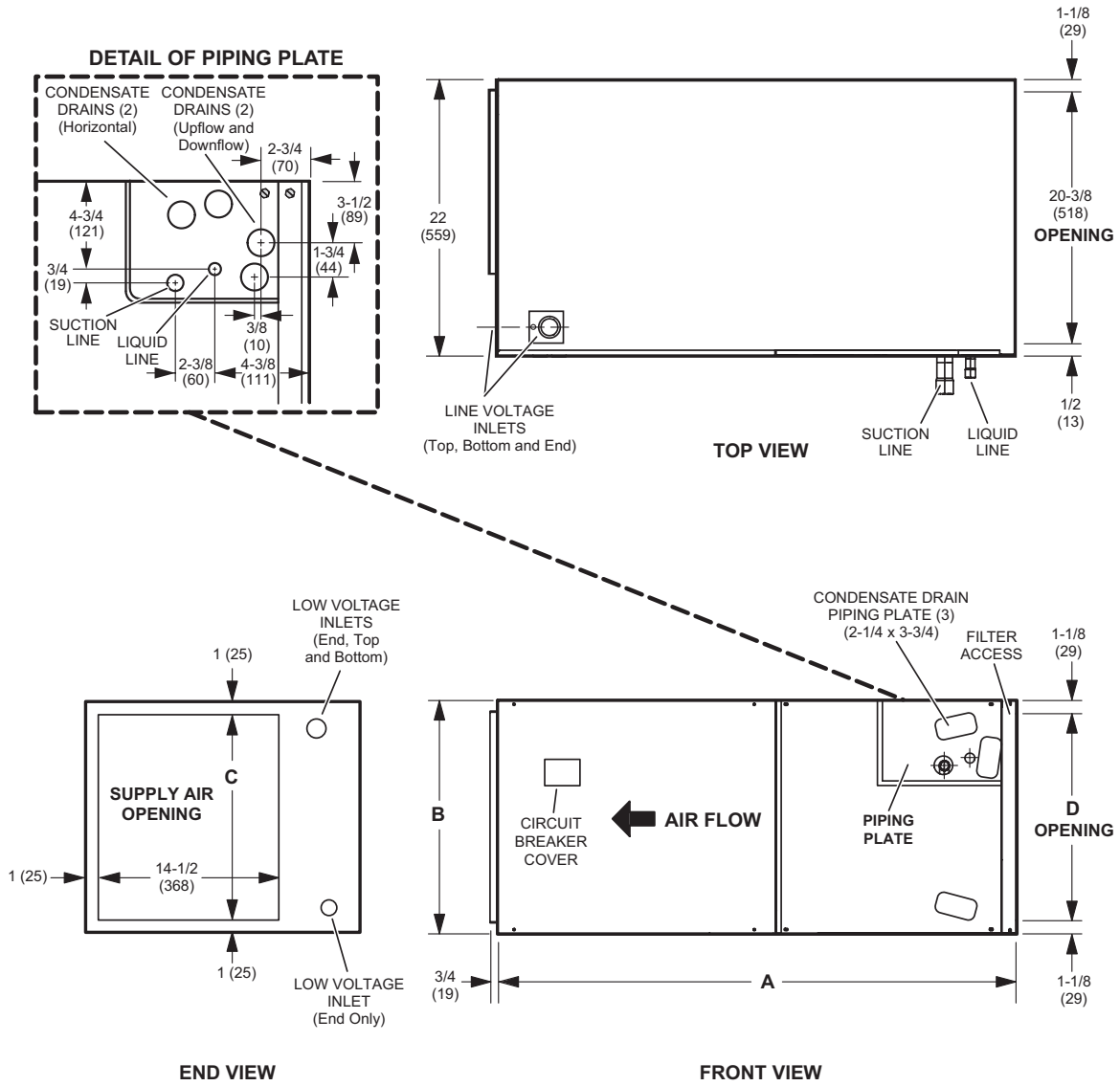

Dimensions	018, 024, 030		036		042		048		060	
	in.	mm	in.	mm	in.	mm	in.	mm	in.	mm
A	41-1/2	1054	43-1/2	1105	45-1/2	1156	47	1194	53-5/8	1362
B	18-1/2	470	18-1/2	470	21-1/2	546	21-1/2	546	21-1/2	546
C	16-1/2	419	16-1/2	419	19-1/2	495	19-1/2	495	19-1/2	495
D	16-1/4	413	16-1/4	413	19-1/4	489	19-1/4	489	19-1/4	489

HORIZONTAL SUPPORT FRAME KIT

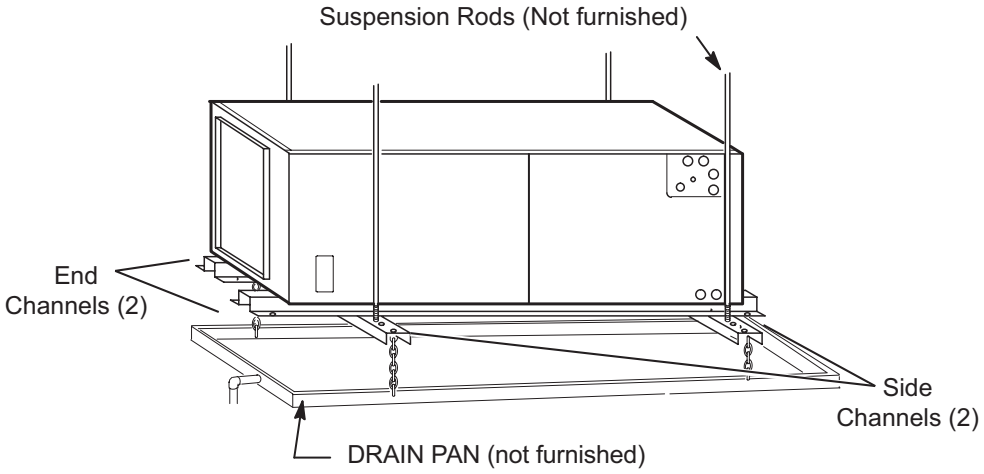

Includes (2) 1 x 1-1/2 x 32-5/8 in. side channels and
(2) 1 x 3 x 53-7/8 in. end channels.

SIDE RETURN UNIT STAND
(Upflow Only)

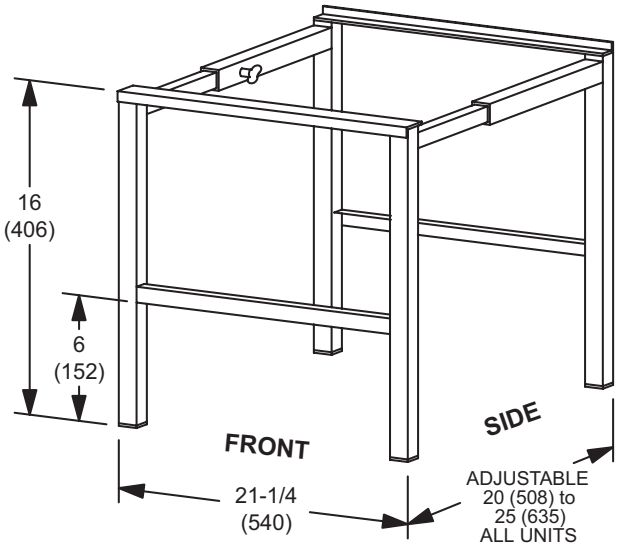

REVISIONS

Sections	Description of Change
Control Options	Updated to reflect latest product offering.

Visit us at www.Lennox.com
For the latest technical information, www.LennoxPros.com
Contact us at 1-800-9-LENNOX

NOTE - Due to Lennox' ongoing commitment to quality, Specifications, Ratings and Dimensions subject to change without notice and without incurring liability.
Improper installation, adjustment, alteration, service or maintenance can cause property damage or personal injury.
Installation and service must be performed by a qualified installer and servicing agency.

©2026 Lennox Industries, Inc.