CBA25UHE

MERIT® Series

Upflow/Horizontal | Constant Torque Motor | R-410A | 60Hz

RESIDENTIAL
PRODUCT SPECIFICATIONS (EHB)

2 to 3.5 Tons
Optional Electric Heat - 4 to 15 kW

MERIT® SERIES

LENNOX QUANTUM™ COIL

NOTE - These air handlers are sold in Canada for system installation and replacement!

These air handlers are sold in the US for repair/replacement only (no system installations are allowed)!

MODEL NUMBER IDENTIFICATION

CB A 25 UH E - 030 - 230 - 61

Unit Type
CB = Air Handler

Refrigerant Type
A = Aluminum Coil/R-410A

Series

Configuration
UH = Upflow/Horizontal

Blower Motor
E = High Efficiency Constant Torque Blower Motor

Nominal Cooling Capacity
024 = 2 tons
030 = 2.5 tons
036 = 3 tons
042 = 3.5 tons

Voltage
230 = 208/230V-1 phase-60hz

Minor Revision Number

Form Number 211247 | April 2026
Supersedes all previous versions

FEATURE HIGHLIGHTS

1. Quantum™ Coil
2. Refrigerant Line Connections
3. Check and Expansion Valve
4. Power Saver™ Constant Torque Blower Motor
5. Heavy Gauge Steel Cabinet
6. Anti-Microbial Dual Position Drain Pans
7. Air Filter
8. Transformer
9. Electric Heat (option)

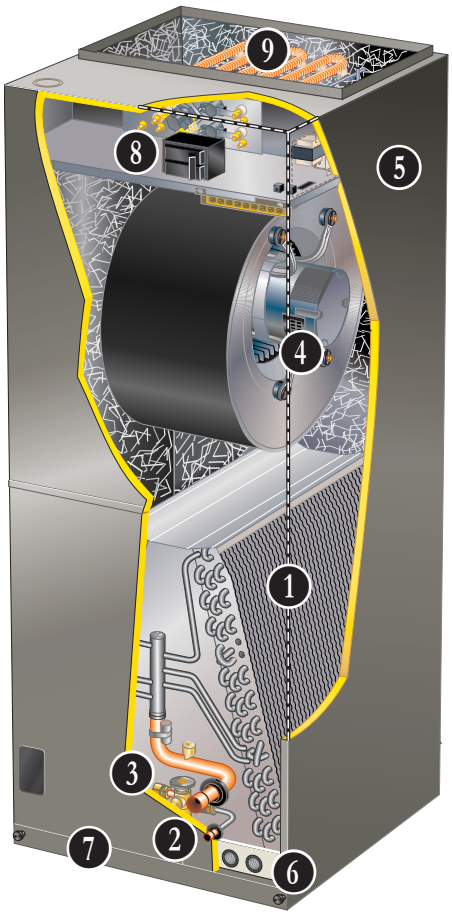

CONTENTS

Approvals And Warranty 3
Blower Data 9
Control Options 6
Dimensions - Accessories 16
Dimensions - Unit 14
Electrical Data 8
Electric Heat Data 10
Features 3
Indoor Air Quality Product Options 6
Installation Clearances With Electric Heat 8
Optional Accessories - Order Separately 8
Replacement Circuit Breakers 13
Specifications 8

APPROVALS AND WARRANTY

APPROVALS

- Tested with matching air conditioners and heat pump units in the Lennox Research Laboratory environmental test room in accordance with AHRI Standard 210/240-2023
- AHRI Certified system match-ups and expanded ratings, visit www.LennoxPros.com
- ETL Listed to US and Canadian safety standards and components within are bonded for grounding to meet safety standards for servicing required by NEC and CEC
- Optional electric heaters are ETL listed and rated in accordance with US Department of Energy (DOE) test procedures and Federal Trade Commission (FTC) labeling regulations
- Blower performance data according to unit tests conducted in Lennox air test chamber
- Approved for installation in manufactured housing and mobile homes
- ISO 9001 Registered Manufacturing Quality System

WARRANTY

- All covered components
  - Limited five years in residential applications
  - Limited one year in non-residential applications

NOTE - Refer to Lennox® Basic Limited Warranty at www.Lennox.com for additional details.

FEATURES

APPLICATIONS

- 2 to 3.5 ton nominal sizes
- Upflow or horizontal applications

NOTE - Downflow applications require optional conversion kit.

- Applicable to R-410A expansion valve systems in cooling applications and check and expansion valve systems in heat pump applications
- Wide-range check and expansion valve is factory installed
- Optional field installed electric heaters available in several sizes for additive heating capacity

REFRIGERANT SYSTEM

1 Quantum™ Coil

- Lennox designed and fabricated coil
- Enhanced aluminum alloy tube/enhanced fin coil for superior corrosion resistance
- Aluminum tubing, hairpins, distributor and header tubes.
- Ripple-edged aluminum fins
- Twin coil construction assembled in a “A” configuration for large surface area
- Provides excellent heat transfer and low air resistance for maximum efficiency
- Precise circuiting for uniform refrigerant distribution
- Lanced fins provide maximum exposure of fin surface to air stream
- Rifled tubing provides superior heat transfer
- Coil thoroughly factory tested under high pressure to ensure leakproof construction

2 Refrigerant Line Connections

- Copper refrigerant sweat connections on both liquid and suction lines for easy brazing
- Lines extend outside of the cabinet for ease of connection
- See dimension drawings for locations

Braze-Free/Press Fitting Flexibility

- Units can accommodate braze-free or press fittings for installation versatility

3 Check and Expansion Valve

- For use with R-410A systems
- Wide range valve with Chatleff style fitting
- Factory installed on all models, internal to cabinet

BLOWER

4 Power Saver™ Constant Torque Blower Motor

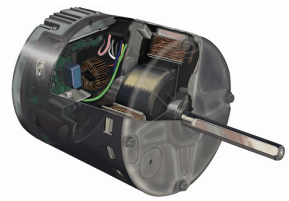

- Programmable high efficiency multi-speed blower motor
- By maintaining constant torque output, blower motor can deliver more uniform (but not constant) airflow over the static pressure range
- Programmable multi-speed operation is achieved by the use of an ECM (Electronically Commutated Motor) motor
- Leadless blower motor features simple plug-in connections
- Choice of blower speeds is available
- See blower Data tables
- Blower speed change is easily accomplished by a simple wiring change

BLOWER (continued)

Blower Assembly
- Each blower is statically and dynamically balanced as an assembly before installation in the unit
- Blower motor is resiliently mounted to blower assembly
- Blower slides out of cabinet for servicing

CABINET

5
- Constructed of heavy gauge galvanized steel
- Pre-painted cabinet finish
- Completely insulated with foil faced fiberglass insulation
- Removable panels provide complete service access
- Filter access door for easy filter replacement
- Thumbscrews hold filter door in place
- Electrical inlets provided in sides and top of cabinet
- See dimension drawing for locations
- Plugs in cabinet for drain connections for upflow (left and right) and horizontal applications
- See dimension drawing

Low Leakage Cabinet
- All models have less than 2% air leakage and meet ANSI/ASHRAE Standard 193-2010 “Method of Test for Determining the Air Tightness of HVAC Equipment”

Upflow/Horizontal Capability (Optional Downflow)
- Shipped for upflow and horizontal right-hand discharge
- May be field converted to horizontal left-hand air discharge by repositioning horizontal drain pan
- Optional downflow kit required for field conversion

6 Anti-Microbial Dual Position Drain Pans
- Anti-Microbial additive resists growth of mold and mildew on drain pan which improves indoor air quality and reduces drain line blockage
- Drain pans designed for upflow or horizontal applications
- Deep, corrosion resistant high temperature engineered polymer drain pans have dual pipe drains
- See dimension drawing

Optional Accessories

Downflow Conversion Kit
- Required for field conversion to downflow position
- Kit consists of insulated downflow drain pan, insulated drain pan drip shields, coil drip shields, seal plates and support brackets for repositioning coil and drain pan

Horizontal Support Frame Kit
- Provides support of unit in horizontal applications
- Consists of (2) 1 x 1-1/2 x 32-5/8 in. and (2) 1 x 3 x 53-7/8 in. painted heavy gauge cold rolled steel support channels with assembly and suspending holes
- Bolts and nuts furnished for field assembly
- Suspending rods must be field provided

Side Return Unit Stand (Upflow Only)
- Raises unit 16 in. above floor for side return air duct connection
- Eliminates need for wooden platform construction
- All aluminum construction
- Two adjustable frames fit all sizes

Wall Hanging Bracket Kit (Upflow Only)
- Allows unit to be hung on wall at any height
- Consists of heavy-gauge steel support brackets (one for air handler, one for wall mount)
- Screws furnished for fastening one bracket to unit
- Bolts for fastening one bracket to wall are field provided

High Performance Economizer (Commercial Applications Only)
- Designed for applications requiring outdoor air to be utilized in a commercial HVAC system
- Allows the entry of fresh outdoor air for free cooling, reducing the requirement for mechanical cooling
- Heavy gauge galvanized steel cabinet lined with thick fiberglass insulation
- Mixed air sensor, outdoor air sensor and 24VAC transformer furnished
- Approved for California Title 24 building standards
- ASHRAE 90.1-2010 compliant
- See separate Product Specifications bulletin for additional information and available control and sensor options

FEATURES

FILTER

7
- Disposable 1 inch filter is furnished
- Filter rack furnished in cabinet for easy filter installation
- See Specifications tables for filter sizes

CONTROLS

8 Transformer
- 24 volt transformer furnished as standard
- Factory installed in the unit control box
- Terminal strip furnished

Optional Accessories

Thermostat
- Thermostat is not furnished with unit
- See page 6

OPTIONAL ELECTRIC HEAT

9
- ETL listed
- Field install internal to unit cabinet
- Available in several kW sizes
- See Electric Heat tables
- Helix wound nichrome heating elements exposed directly in air stream resulting in instant heat transfer, low element temperatures and long service life
- Each element equipped with accurately located limit control with fixed temperature off setting and automatic reset
- Thermal sequencer relay brings elements on and off line, in sequence and equal increments, with time delay between each
- Heating control relay(s) furnished as standard
- Factory assembled with controls installed and wired
- Electric heat control wiring plugs into mating connector on air handler unit

Circuit Breaker (CB) Models
- All “CB” model heaters are equipped with circuit breakers for overload and short circuit protection
- Factory wired and mounted on electric heat unit
- Current sensitive and temperature actuated
- Manual reset
- Flexible plastic circuit breaker cover protects circuit breaker in areas with high humidity or unconditioned areas to prevent nuisance tripping
- Circuit breakers qualify as disconnect means at unit in many areas, eliminate the need for field provided disconnect
- Consult local electrical code in your area

Optional Accessories

Single-Point Power Source Control Box
- Control Box may be used with optional electric heat when single power supply is connected to multi-circuit electric heat
- Field installs external to the unit cabinet on either side or top
- Constructed of heavy gauge steel, baked enamel finish, prepunched mounting holes, electrical inlet knockouts, and terminal strip
- Removeable cover provides easy access
- Dimensions (H x W x D) - 7 x 7 x 4 in.

INDOOR AIR QUALITY PRODUCT OPTIONS

Healthy Climate® PureAir® Air Purification System

- Filtration - The Carbon Clean 16® (MERV 16) media filter captures more than 95% of particles 0.3 microns and larger and more than 90% of particles 0.01 microns and larger
- Highest airflow performance and lowest pressure drop when compared to a leading brand.
- Long life filters up to 1 year

Healthy Climate® Media Air Cleaner

- High performance in a narrow 7 in. cabinet
- Available with MERV 11, 13, or 16 rated filters
- Multi-position heavy gauge steel cabinet will support furnace/coil or air handler and associated duct work
- Tool-less entry
- Tool-less assembly for quick installation

Healthy Climate® Whole Home In Duct Air Purifiers

- Compact Duct Mounted Design
- Effective against odors and VOC's
- Certified Ozone free
- UVC lamp and carbon cells

Healthy Climate® Ultraviolet Germicidal Lights

- Compact duct mounted design
- Single or dual applications
- Certified ozone free
- Effective against odors to help keep the system clean
- Safety Interlocks
  (Additional UVC Compliance Kit for UL 60335-2-40 is available for A2L applications)
- Low power consumption
- Available for 24V or 110/230V
- Up to 1340 microwatts /cm² output (dual lamp model)

NOTE - Please refer to the individual Product Specifications for these products for full information.

CONTROL OPTIONS

E40 Smart Wi-Fi Thermostat

- 3 Htg.-2 Clg.
- 7-day, universal, programmable, touchscreen thermostat
- Controls dehumidification during cooling mode and humidification during heating mode
- Smooth Setback Recovery and compressor short-cycle protection
- One-Touch Away Mode, Smart Away™ (geo-fencing), equipment maintenance reminders and scheduling
- Smart home automation compatible with Amazon Alexa®, Google Assistant, Control4®, Building36®, Matter and IFTTT
- Lennox® Home App controls temperature, fan operation, set programs/schedules and set Away mode on a smartphone
- Lennox Smart Tech App allows the installer to commission the system and remotely turn the system on and off during setup or service call on a smartphone

L40 Smart Wi-Fi Thermostat

- 2 Htg.-1 Clg.
- 7-day, universal, programmable, touchscreen thermostat
- Provides temperature control for gas, electric and heat pumps for single-stage heating or cooling systems (including dual-fuel operation)
- One-Touch Away Mode, Smart Away™ (geo-fencing), equipment maintenance reminders and scheduling
- Smooth Setback Recovery and compressor short-cycle protection
- Smart home automation compatible with Amazon Alexa®, Google Assistant, Control4®, Building36®, Matter and IFTTT
- Lennox® Home App controls temperature, fan operation, set programs/schedules and set Away mode on a smartphone
- Lennox Smart Tech App allows the installer to commission the system and remotely turn the system on and off during setup or service call on a smartphone

M40 Smart Wi-Fi Thermostat

- 3 Htg.-2 Clg.
- 7-day, universal, programmable, touchscreen thermostat
- Smooth Setback Recovery and compressor short-cycle protection
- One-Touch Away Mode, Smart Away™ (geo-fencing), equipment maintenance reminders and scheduling
- Smart home automation compatible with Amazon Alexa®, Google Assistant, Control4®, Building36®, Matter and IFTTT
- Lennox® Home App controls temperature, fan operation, set programs/schedules and set Away mode on a smartphone
- Lennox Smart Tech App allows the installer to commission the system and remotely turn the system on and off during setup or service call on a smartphone

INDOOR AIR QUALITY PRODUCT OPTIONS - ORDERING

NOTE - Refer to the individual Product Specifications documents for additional accessories and maintenance items.

Description	Dimensions	Matching Air Handler	Order Number
PureAir® S Air Purification System			
PCO3S-14-16	21-1/8 x 8-3/4 x 23-3/4	- - -	**Y8905**
PCO3S-16-16	17-1/2 x 8-3/4 x 26-1/2	- - -	**Y8904**
PCO3S-20-16	21-1/8 x 8-3/4 x 26-1/2	- - -	**Y8903**
Healthy Climate® Media Air Cleaner			
HCC10-22 (Cabinet)	18-1/2 x 21-1/8 x 7	CBK45UH(E/P)T-018-024-030	**26Z81**
HCF10-16 (Filter) MERV 16	17 x 21 x 5		**26Z88**
HCF10-11 (Filter) MERV 11	17 x 21 x 5		**26Z85**
HCC19-22 (Cabinet)	21-1/2 x 22-3/4 x 7	CBK45UH(E/P)T-036-042-048-060	**26Z82**
HCF19-16 (Filter) MERV 16	20 x 22 x 5		**26Z91**
HCF19-11 (Filter) MERV 11	20 x 22 x 5		**26Z89**
Healthy Climate® Whole Home In Duct Air Purifiers			
HCWHAP1	8 x 7 x 16.5	- - -	**23V99**
Healthy Climate® Ultraviolet Germicidal Lights			
UVC-24V (24V) 17-1/2 in.	Ballast 4-3/4 x 2-1/4 x 2	- - -	**X9423**
UVC-41W-S (110/230V) 17-1/2 in.	Ballast 11-3/4 x 2-3/4 x 1-5/8	- - -	**X9424**
UVC-41W-D (110/230V) 17-1/2 in.	Ballast 11-3/4 x 2-3/4 x 1-5/8	- - -	**X9425**

CONTROLS - ORDERING

E40 Smart Wi-Fi Thermostat	3-3/8 x 5-3/8 x 1	- - -	**30L26**
Lennox® Smart Room Sensor	4 x 5-1/2 x 3	- - -	**22V25**
Lennox® Smart Air Quality Monitor	3-5/8 x 4-3/8 x 1-3/8	- - -	**21P02**
Lennox® Wireless Extender	4 x 5-1/2 x 2-1/2	- - -	**22V26**
[1] L40 Smart Wi-Fi Thermostat	2-13/16 x 2-13/16 x 1/4	- - -	**27V51**
M40 Smart Wi-Fi Thermostat	3-5/16 x 4-5/16 x 7/8	- - -	**30L27**
Thermostat Accessories			
[2] Discharge Air Temperature Sensor (For E40)			**88K38**
[3] Remote Outdoor Air Temperature Sensor (For dual-fuel and Humiditrol®)			**X2658**

[1] All optional electric heat is controlled as a single stage of heating.

[2] Optional for service diagnostics (E40).

[3] Remote Outdoor Air Temperature Sensor is used with conventional (non-Lennox® Communicating) outdoor units (sensor is furnished with Lennox® Communicating outdoor units). Allows the thermostat to display outdoor temperature. Required in dual-fuel and Humiditrol® applications.

SPECIFICATIONS

Size		024	030	036	042
Nominal Tonnage		2	2.5	3	3.5
Refrigerant Type		R-410A	R-410A	R-410A	R-410A
Connections	Liquid line (OD) sweat - in.	3/8	3/8	3/8	3/8
	Suction line (OD) sweat - in.	3/4	3/4	7/8	7/8
	Condensate drain (FPT) - in.	(2) 3/4	(2) 3/4	(2) 3/4	(2) 3/4
Indoor Coil	Net face area - ft.^{2}	3.77	4.72	5.66	5.66
	Tube diameter - in.	3/8	3/8	3/8	3/8
	Rows	3	3	3	3
	Fins - in.	15	15	15	15
Blower	HP	1/2	1/2	1/2	3/4
	Wheel nominal diameter x width - in.	10 x 8	10 x 8	10 x 8	12 x 10
	Air volume range - cfm	203 - 1054	406 - 1341	422 - 1523	568 - 1656
[1] **Filters**	Size - in.	15 x 20 x 1	15 x 20 x 1	15 x 20 x 1	18 x 20 x 1
Shipping Data - lbs.		127	133	169	169

ELECTRICAL DATA

Line voltage data (Volts-Phase-Hz)	208/230-1-60	208/230-1-60	208/230-1-60	208/230-1-60
[2] Maximum overcurrent protection (MOCP) amps (unit)	15	15	15	15
[3] Minimum circuit ampacity (MCA) (unit)	5.1	5.1	5.1	8.0
Blower Motor Full Load Amps	4.1	4.1	4.1	6.0

[1] Disposable filter.
[2] HACR type circuit breaker or fuse.
[3] Refer to National or Canadian Electrical Code manual to determine wire, fuse and disconnect size requirements. Use wires suitable for at least 167°F.

OPTIONAL ACCESSORIES - ORDER SEPARATELY

Model	-024 -030	-036	-042
M30 Smart Wi-Fi Thermostat	**15Z69**	**15Z69**	**15Z69**
Remote Outdoor Temperature Sensor	**X2658**	**X2658**	**X2658**
Downflow Conversion Kit	**Y9658**	**Y9659**	**Y9659**
Electric Heat - See Electric Heat Data Tables	**4 to 15 kW**		
Horizontal Support Frame Kit	**56J18**	**56J18**	**56J18**
Side Return Unit Stand (Upflow Only)	**45K32**	**45K32**	**45K32**
Single-Point Power Source Control Box (for Electric Heat)	**21H39**	**21H39**	**21H39**
Wall Hanging Bracket Kit (Upflow Only)	**45K30**	**45K30**	**45K30**
High Performance Economizer (Commercial Only)	**10U53**	**10U53**	**10U53**

INSTALLATION CLEARANCES WITH ELECTRIC HEAT

Cabinet	0 inch (0 mm)
To Plenum	0 inch (0 mm)
To Outlet Duct within 3 feet (914 mm)	0 inch (0 mm)
Floor	0 inch (0 mm) See Note #1
Service / Maintenance	See Note #2

[1] Units installed on combustible floors in the downflow position with electric heat do not require a downflow combustible flooring base.
[2] Front service access - 24 inches (610 mm) minimum.

NOTE - If cabinet depth is more than 24 inches (610 mm), allow a minimum of the cabinet depth plus 2 inches (51 mm).

BLOWER DATA

CBA25UHE-024 PERFORMANCE

External Static Pressure in. w.g.	Air Volume / Watts at Various Blower Speeds									
	Tap 1		Tap 2		Tap 3		Tap 4		Tap 5	
	cfm	Watts	cfm	Watts	cfm	Watts	cfm	Watts	cfm	Watts
0.10	1054	194	1015	180	1015	180	820	107	676	64
0.20	1020	203	981	188	981	188	780	114	612	71
0.30	987	212	953	195	953	195	752	120	514	77
0.40	958	219	922	204	922	204	712	126	448	83
0.50	940	226	899	210	899	210	678	133	400	86
0.60	902	235	865	219	865	219	598	142	337	92
0.70	881	241	831	224	831	224	535	147	270	100
0.80	833	248	799	237	799	237	495	153	203	103

NOTE - All air data measured external to unit with dry coil and 1 inch non-pleated air filter in place.
Electric heaters have no appreciable air resistance.

CBA25UHE-030 PERFORMANCE

External Static Pressure in. w.g.	Air Volume / Watts at Various Blower Speeds									
	Tap 1		Tap 2		Tap 3		Tap 4		Tap 5	
	cfm	Watts	cfm	Watts	cfm	Watts	cfm	Watts	cfm	Watts
0.10	1341	346	1132	219	1132	219	999	160	775	87
0.20	1309	357	1099	229	1099	229	965	168	731	94
0.30	1289	364	1068	237	1068	237	936	175	690	100
0.40	1259	376	1041	245	1041	245	899	184	647	106
0.50	1239	385	1014	254	1014	254	870	191	565	115
0.60	1197	389	985	261	985	261	833	197	522	118
0.70	1168	395	957	269	957	269	797	208	474	125
0.80	1139	403	928	278	928	278	715	218	406	132

NOTE - All air data measured external to unit with dry coil and 1 inch non-pleated air filter in place.
Electric heaters have no appreciable air resistance.

CBA25UHE-036 PERFORMANCE

External Static Pressure in. w.g.	Air Volume / Watts at Various Blower Speeds									
	Tap 1		Tap 2		Tap 3		Tap 4		Tap 5	
	cfm	Watts	cfm	Watts	cfm	Watts	cfm	Watts	cfm	Watts
0.10	1523	386	1415	312	1415	312	1303	250	865	94
0.20	1492	399	1381	325	1381	325	1268	261	812	104
0.30	1462	411	1352	336	1352	336	1234	271	747	113
0.40	1434	423	1316	348	1316	348	1199	283	674	119
0.50	1403	434	1285	360	1285	360	1153	295	620	125
0.60	1363	452	1238	377	1238	377	1117	306	565	131
0.70	1315	456	1202	386	1202	386	1047	323	484	138
0.80	1281	467	1134	396	1134	396	1004	326	422	144

NOTE - All air data measured external to unit with dry coil and 1 inch non-pleated air filter in place.
Electric heaters have no appreciable air resistance.

BLOWER DATA

CBA25UHE-042 PERFORMANCE

External Static Pressure in. w.g.	Air Volume / Watts at Various Blower Speeds									
	Tap 1		Tap 2		Tap 3		Tap 4		Tap 5	
	cfm	Watts	cfm	Watts	cfm	Watts	cfm	Watts	cfm	Watts
0.10	1656	569	1560	473	1560	473	1446	390	982	132
0.20	1624	581	1526	488	1526	488	1413	402	923	140
0.30	1594	591	1500	498	1500	498	1362	411	866	148
0.40	1563	602	1469	510	1469	510	1357	420	812	153
0.50	1543	613	1437	520	1437	520	1325	429	745	162
0.60	1505	615	1413	530	1413	530	1292	438	686	169
0.70	1456	613	1345	543	1345	543	1257	448	642	176
0.80	1417	612	1335	544	1335	544	1221	458	568	185

NOTE - All air data measured external to unit with dry coil and 1 inch non-pleated air filter in place.
Electric heaters have no appreciable air resistance.

ELECTRIC HEAT DATA — CBA25UHE-024 | SINGLE PHASE

	Electric Heat Model Number	Input			Blower Motor Full Load Amps	[2] Minimum Circuit Ampacity	[3] Maximum Overcurrent Protection
		Volt	kW	[1] Btuh			
4 kW	ECB45-4 (**27A08**) Terminal Block ECB45-4CB (**27A12**) 30A Circuit Breaker	208	3.0	10,250	4.1	23	[4] **25**
		220	3.4	11,450	4.1	24	[4] **25**
		230	3.7	12,550	4.1	25	[4] **25**
		240	4.0	13,650	4.1	26	30
5 kW	ECB45-5 (**27A09**) Terminal Block ECB45-5CB (**27A13**) 30A Circuit Breaker	208	3.6	12,300	4.1	27	30
		220	4.0	13,800	4.1	28	30
		230	4.4	15,000	4.1	29	30
		240	4.8	16,400	4.1	30	30
7.5 kW	ECB45-7.5 (**27A10**) Terminal Block ECB45-7.5CB (**27A14**) 45A Circuit Breaker	208	5.6	19,200	4.1	39	[4] **40**
		220	6.3	21,500	4.1	41	45
		230	6.9	23,500	4.1	43	45
		240	7.5	25,600	4.1	44	45
10 kW	ECB45-10 (**27A11**) Terminal Block ECB45-10CB (**27A15**) 60A Circuit Breaker	208	7.2	24,600	4.1	48	[4] **50**
		220	8.0	27,500	4.1	51	60
		230	8.8	30,000	4.1	53	60
		240	9.6	32,700	4.1	55	60

NOTE - Circuit 1 Minimum Circuit Ampacity includes the Blower Motor Full Load Amps.

[1] Electric heater capacity only - does not include additional blower motor heat capacity.

[2] Refer to National or Canadian Electrical Code manual to determine wire, fuse and disconnect size requirements. Use wires suitable for at least 167°F.

[3] HACR type breaker or fuse.

[4] **Bold indicates that the circuit breaker on "CB" circuit breaker models must be replaced with size shown. See table on page 13.**

ELECTRIC HEAT DATA — CBA25UHE-030 | SINGLE PHASE

	Electric Heat Model Number	Input			Blower Motor Full Load Amps	[2] Minimum Circuit Ampacity		[3] Maximum Overcurrent Protection		Single Point Power Source	
		Volt	kW	[1] Btuh		Ckt 1	Ckt 2	Ckt 1	Ckt 2	[2] Minimum Circuit Ampacity	[3] Maximum Overcurrent Protection
4 kW	ECB45-4 (**27A08**) Terminal Block ECB45-4CB (**27A12**) 30A Circuit Breaker	208	3.0	10,250	4.1	23	- - -	[4] **25**	- - -	- - -	- - -
		220	3.4	11,450	4.1	24	- - -	[4] **25**	- - -	- - -	- - -
		230	3.7	12,550	4.1	25	- - -	[4] **25**	- - -	- - -	- - -
		240	4.0	13,650	4.1	26	- - -	30	- - -	- - -	- - -
5 kW	ECB45-5 (**27A09**) Terminal Block ECB45-5CB (**27A13**) 30A Circuit Breaker	208	3.6	12,300	4.1	27	- - -	30	- - -	- - -	- - -
		220	4.0	13,800	4.1	28	- - -	30	- - -	- - -	- - -
		230	4.4	15,000	4.1	29	- - -	30	- - -	- - -	- - -
		240	4.8	16,400	4.1	30	- - -	30	- - -	- - -	- - -
7.5 kW	ECB45-7.5 (**27A10**) Terminal Block ECB45-7.5CB (**27A14**) 45A Circuit Breaker	208	5.6	19,200	4.1	39	- - -	[4] **40**	- - -	- - -	- - -
		220	6.3	21,500	4.1	41	- - -	45	- - -	- - -	- - -
		230	6.9	23,500	4.1	43	- - -	45	- - -	- - -	- - -
		240	7.5	25,600	4.1	44	- - -	45	- - -	- - -	- - -
10 kW	ECB45-10 (**27A11**) Terminal Block ECB45-10CB (**27A15**) 60A Circuit Breaker	208	7.2	24,600	4.1	48	- - -	[4] **50**	- - -	- - -	- - -
		220	8.0	27,500	4.1	51	- - -	60	- - -	- - -	- - -
		230	8.8	30,000	4.1	53	- - -	60	- - -	- - -	- - -
		240	9.6	32,700	4.1	55	- - -	60	- - -	- - -	- - -
12.5 kW	ECB45-12.5CB (**27A16**) (1) 50A and (1) 25A Circuit Breaker	208	9.4	32,000	4.1	43	19	[4] **45**	[4] **20**	62	70
		220	10.5	35,800	4.1	45	20	[4] **45**	[4] **20**	65	70
		230	11.5	39,200	4.1	47	21	50	25	68	70
		240	12.5	42,600	4.1	49	22	50	25	70	70
15 kW	ECB45-15CB (**27A17**) (1) 60A and (1) 25A Circuit Breaker	208	10.8	36,900	4.1	48	22	[4] **50**	25	70	70
		220	12.1	41,300	4.1	51	23	60	25	74	80
		230	13.2	45,100	4.1	53	24	60	25	77	80
		240	14.4	49,100	4.1	55	25	60	25	80	80

NOTE - Circuit 1 Minimum Circuit Ampacity includes the Blower Motor Full Load Amps.

[1] Electric heater capacity only - does not include additional blower motor heat capacity.

[2] Refer to National or Canadian Electrical Code manual to determine wire, fuse and disconnect size requirements. Use wires suitable for at least 167°F.

[3] HACR type breaker or fuse.

[4] **Bold indicates that the circuit breaker on "CB" circuit breaker models must be replaced with size shown. See table on page 13.**

	Electric Heat Model Number	Input			Blower Motor Full Load Amps	[2] Minimum Circuit Ampacity		[3] Maximum Overcurrent Protection		Single Point Power Source	
		Volt	kW	[1] Btuh		Ckt 1	Ckt 2	Ckt 1	Ckt 2	[2] Minimum Circuit Ampacity	[3] Maximum Overcurrent Protection
4 kW	ECB45-4 (**27A08**) Terminal Block ECB45-4CB (**27A12**) 30A Circuit Breaker	208	3.0	10,250	4.1	23	- - -	[4] **25**	- - -	- - -	- - -
		220	3.4	11,450	4.1	24	- - -	[4] **25**	- - -	- - -	- - -
		230	3.7	12,550	4.1	25	- - -	[4] **25**	- - -	- - -	- - -
		240	4.0	13,650	4.1	26	- - -	30	- - -	- - -	- - -
5 kW	ECB45-5 (**27A09**) Terminal Block ECB45-5CB (**27A13**) 30A Circuit Breaker	208	3.6	12,300	4.1	27	- - -	30	- - -	- - -	- - -
		220	4.0	13,800	4.1	28	- - -	30	- - -	- - -	- - -
		230	4.4	15,000	4.1	29	- - -	30	- - -	- - -	- - -
		240	4.8	16,400	4.1	30	- - -	30	- - -	- - -	- - -
7.5 kW	ECB45-7.5 (**27A10**) Terminal Block ECB45-7.5CB (**27A14**) 45A Circuit Breaker	208	5.6	19,200	4.1	39	- - -	[4] **40**	- - -	- - -	- - -
		220	6.3	21,500	4.1	41	- - -	45	- - -	- - -	- - -
		230	6.9	23,500	4.1	43	- - -	45	- - -	- - -	- - -
		240	7.5	25,600	4.1	44	- - -	45	- - -	- - -	- - -
10 kW	ECB45-10 (**27A11**) Terminal Block ECB45-10CB (**27A15**) 60A Circuit Breaker	208	7.2	24,600	4.1	48	- - -	[4] **50**	- - -	- - -	- - -
		220	8.0	27,500	4.1	51	- - -	60	- - -	- - -	- - -
		230	8.8	30,000	4.1	53	- - -	60	- - -	- - -	- - -
		240	9.6	32,700	4.1	55	- - -	60	- - -	- - -	- - -
12.5 kW	ECB45-12.5CB (**27A16**) (1) 50A and (1) 25A Circuit Breaker	208	9.4	32,000	4.1	43	19	[4] **45**	[4] **20**	62	70
		220	10.5	35,800	4.1	45	20	[4] **45**	[4] **20**	65	70
		230	11.5	39,200	4.1	47	21	50	25	68	70
		240	12.5	42,600	4.1	49	22	50	25	70	70
15 kW	ECB45-15CB (**27A17**) (1) 60A and (1) 25A Circuit Breaker	208	10.8	36,900	4.1	48	22	[4] **50**	25	70	70
		220	12.1	41,300	4.1	51	23	60	25	74	80
		230	13.2	45,100	4.1	53	24	60	25	77	80
		240	14.4	49,100	4.1	55	25	60	25	80	80

NOTE - Circuit 1 Minimum Circuit Ampacity includes the Blower Motor Full Load Amps.

[1] Electric heater capacity only - does not include additional blower motor heat capacity.

[2] Refer to National or Canadian Electrical Code manual to determine wire, fuse and disconnect size requirements. Use wires suitable for at least 167°F.

[3] HACR type breaker or fuse.

[4] **Bold indicates that the circuit breaker on "CB" circuit breaker models must be replaced with size shown. See table on page 13.**

ELECTRIC HEAT DATA — CBA25UHE-042 | SINGLE PHASE

Electric Heat Model Number		Input			Blower Motor Full Load Amps	[2] Minimum Circuit Ampacity		[3] Maximum Overcurrent Protection		Single Point Power Source	
		Volt	kW	[1] Btuh		Ckt 1	Ckt 2	Ckt 1	Ckt 2	[2] Minimum Circuit Ampacity	[3] Maximum Overcurrent Protection
4 kW	ECB45-4 (**27A08**) Terminal Block ECB45-4CB (**27A12**) 30A Circuit Breaker	208	3.0	10,250	6.0	26	- - -	30	- - -	- - -	- - -
		220	3.4	11,450	6.0	27	- - -	30	- - -	- - -	- - -
		230	3.7	12,550	6.0	27	- - -	30	- - -	- - -	- - -
		240	4.0	13,650	6.0	28	- - -	30	- - -	- - -	- - -
5 kW	ECB45-5 (**27A09**) Terminal Block ECB45-5CB (**27A13**) 30A Circuit Breaker	208	3.6	12,300	6.0	29	- - -	30	- - -	- - -	- - -
		220	4.0	13,800	6.0	30	- - -	30	- - -	- - -	- - -
		230	4.4	15,000	6.0	31	- - -	[4] **35**	- - -	- - -	- - -
		240	4.8	16,400	6.0	33	- - -	[4] **35**	- - -	- - -	- - -
7.5 kW	ECB45-7.5 (**27A10**) Terminal Block ECB45-7.5CB (**27A14**) 45A Circuit Breaker	208	5.6	19,200	6.0	41	- - -	45	- - -	- - -	- - -
		220	6.3	21,500	6.0	43	- - -	45	- - -	- - -	- - -
		230	6.9	23,500	6.0	45	- - -	45	- - -	- - -	- - -
		240	7.5	25,600	6.0	47	- - -	[4] **50**	- - -	- - -	- - -
10 kW	ECB45-10 (**27A11**) Terminal Block ECB45-10CB (**27A15**) 60A Circuit Breaker	208	7.2	24,600	6.0	51	- - -	60	- - -	- - -	- - -
		220	8.0	27,500	6.0	53	- - -	60	- - -	- - -	- - -
		230	8.8	30,000	6.0	55	- - -	60	- - -	- - -	- - -
		240	9.6	32,700	6.0	58	- - -	60	- - -	- - -	- - -
12.5 kW	ECB45-12.5CB (**27A16**) (1) 50A and (1) 25A Circuit Breaker	208	9.4	32,000	6.0	45	19	[4] **45**	[4] **20**	64	70
		220	10.5	35,800	6.0	47	20	50	[4] **20**	67	70
		230	11.5	39,200	6.0	49	21	50	25	70	70
		240	12.5	42,600	6.0	51	22	[4] **60**	25	73	80
15 kW	ECB45-15CB (**27A17**) (1) 60A and (1) 25A Circuit Breaker	208	10.8	36,900	6.0	51	22	60	25	73	80
		220	12.1	41,300	6.0	53	23	60	25	76	80
		230	13.2	45,100	6.0	55	24	60	25	79	80
		240	14.4	49,100	6.0	58	25	60	25	83	90

NOTE - Circuit 1 Minimum Circuit Ampacity includes the Blower Motor Full Load Amps.

[1] Electric heater capacity only - does not include additional blower motor heat capacity.

[2] Refer to National or Canadian Electrical Code manual to determine wire, fuse and disconnect size requirements. Use wires suitable for at least 167°F.

[3] HACR type breaker or fuse.

[4] **Bold indicates that the circuit breaker on "CB" circuit breaker models must be replaced with size shown. See table on page 13.**

REPLACEMENT CIRCUIT BREAKERS

Voltage	Description	Catalog No.
208/240V - 1 Phase	25 amp, 2 pole	**41K13**
	30 amp, 2 pole	**17K70**
	35 amp, 2 pole	**72K07**
	40 amp, 2 pole	**49K14**
	45 amp, 2 pole	**17K71**
	50 amp, 2 pole	**41K12**
	60 amp, 2 pole	**17K72**

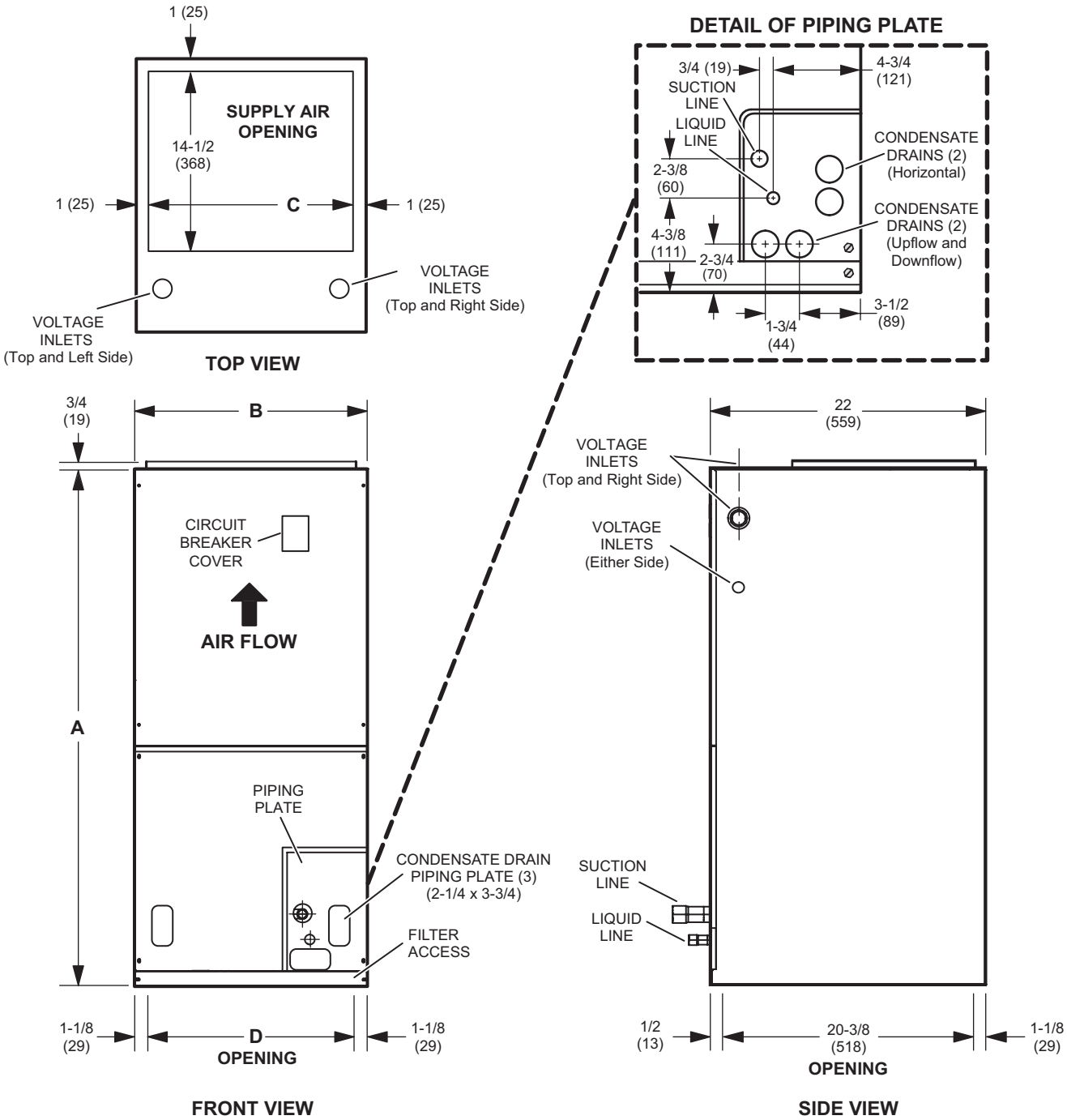

Dimensions	024		030		036, 042	
	in.	mm	in.	mm	in.	mm
A	45-1/2	1156	47	1194	53-5/8	1362
B	18-1/2	470	18-1/2	470	21-1/2	546
C	16-1/2	419	16-1/2	419	19-1/2	495
D	16-1/4	413	16-1/4	413	19-1/4	489

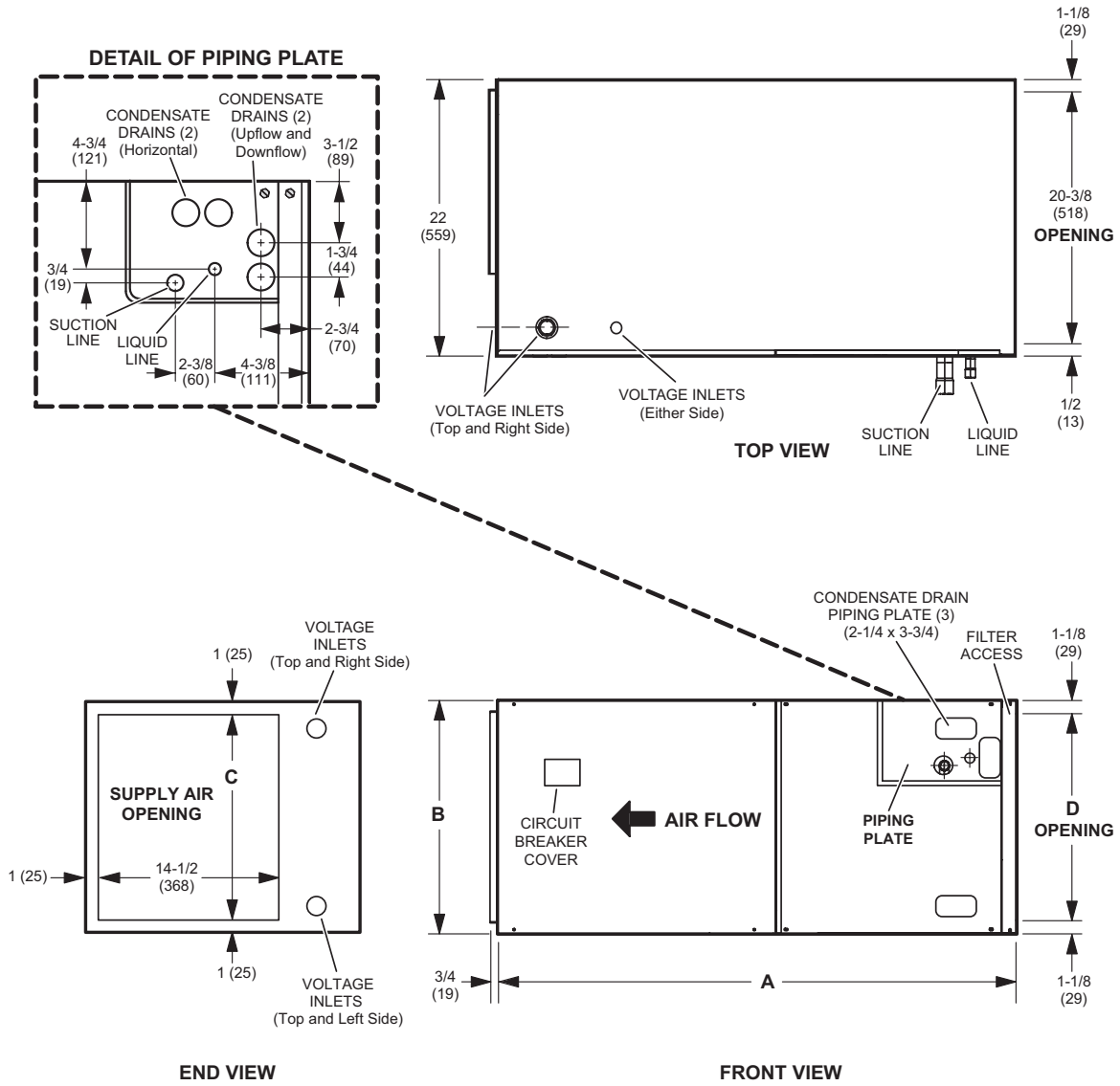

Dimensions	024		030		036, 042	
	in.	mm	in.	mm	in.	mm
A	45-1/2	1156	47	1194	53-5/8	1362
B	18-1/2	470	18-1/2	470	21-1/2	546
C	16-1/2	419	16-1/2	419	19-1/2	495
D	16-1/4	413	16-1/4	413	19-1/4	489

HORIZONTAL SUPPORT FRAME KIT

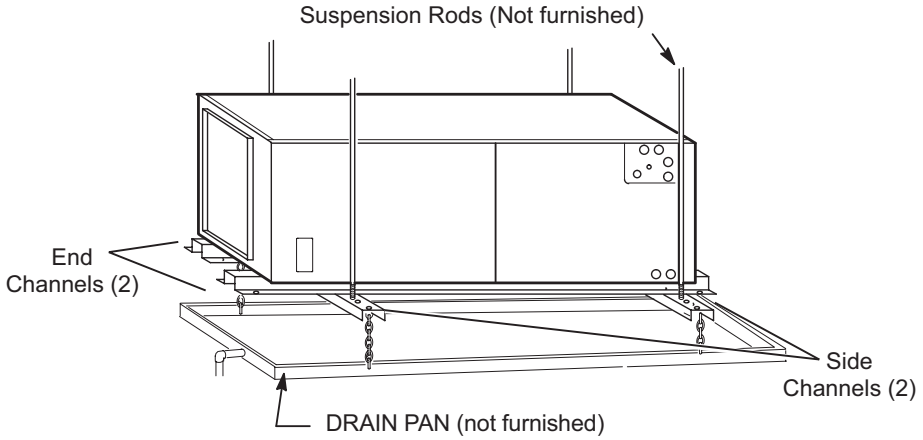

Includes (2) 1 x 1-1/2 x 32-5/8 in. side channels and
(2) 1 x 3 x 53-7/8 in. end channels.

SIDE RETURN UNIT STAND
(Upflow Only)

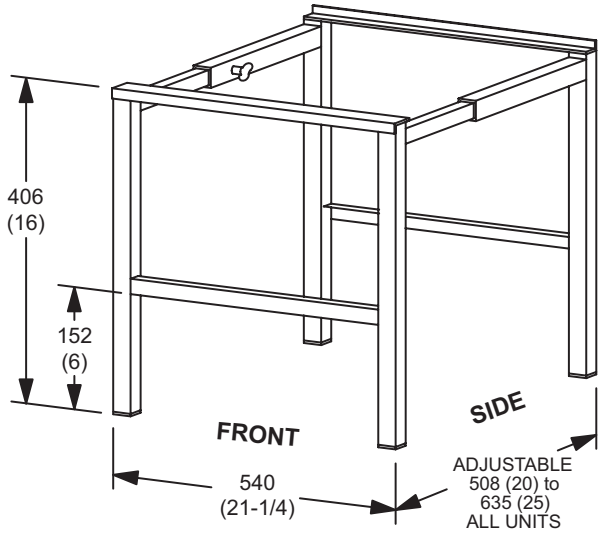

REVISIONS

Sections	Description of Change
Control Options	Updated to reflect latest product offering.

Visit us at www.Lennox.com
For the latest technical information, www.LennoxPros.com
Contact us at 1-800-9-LENNOX

NOTE - Due to Lennox' ongoing commitment to quality, Specifications, Ratings and Dimensions subject to change without notice and without incurring liability.
Improper installation, adjustment, alteration, service or maintenance can cause property damage or personal injury.
Installation and service must be performed by a qualified installer and servicing agency.

©2025 Lennox Industries, Inc.