AIR CONDITIONERS

# EL18KCV

## ELITE® SERIES

**Variable Capacity | Precise Comfort® Technology | Quantum™ Coil | R-454B | 60Hz**

**RESIDENTIAL**
**PRODUCT SPECIFICATIONS (EHB)**

**2 to 5 Tons**
**SEER2 up to 19.5**
**Cooling Capacity | 22,000 to 58,500 Btuh**

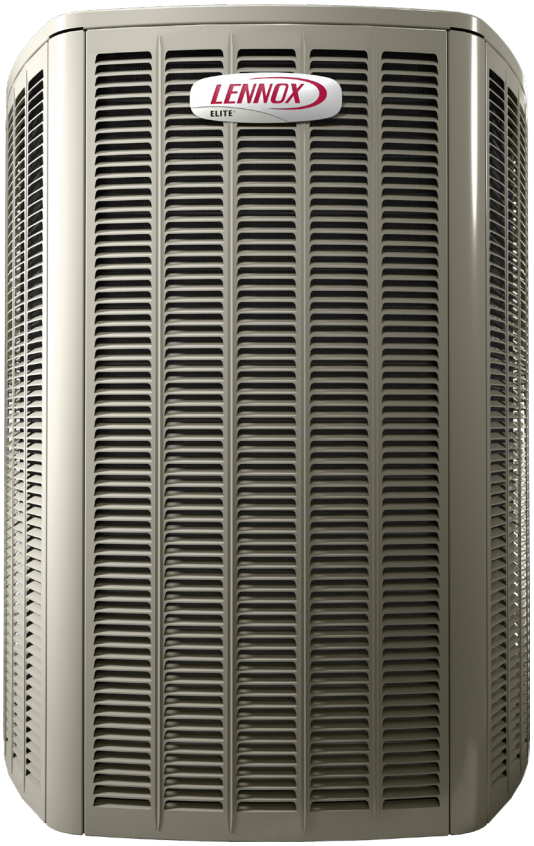


ELITE® SERIES

S40 Smart Wi-Fi
Communicating Thermostat
(not furnished - ordered separately)

LENNOX QUANTUM™ COIL

## MODEL NUMBER IDENTIFICATION

**EL 18 K C V - 036 - 230 A 01**

- **Product Tier** — EL = Elite® Series
- **Nominal SEER2** — 18 = 18.0 to 18.9
- **Refrigerant Type** — K = R-454B
- **Unit Type** — C = Air Conditioner (Condenser)
- **Cooling Stages** — V = Variable Capacity Compressor
- **Nominal Cooling Capacity** — 024 = 2 tons; 036 = 3 tons; 048 = 4 tons; 060 = 5 tons
- **Voltage** — 230 = 208/230V-1 phase-60Hz
- **Ratings Revision Level**
- **Revision Level**

Form Number 211155 | April 2026
Supersedes all previous versions

## FEATURE HIGHLIGHTS

1. Outdoor Coil Fan
2. Quantum™ Coil
3. High Capacity Suction Line Drier
4. High Pressure Switch
5. Variable Capacity Rotary Compressor
6. Accumulator
7. DC Inverter Control
8. Lennox® Communicating Control
9. Heavy Gauge Steel Cabinet
10. Louvered Coil Protection
11. Refrigerant Line Connections and Access

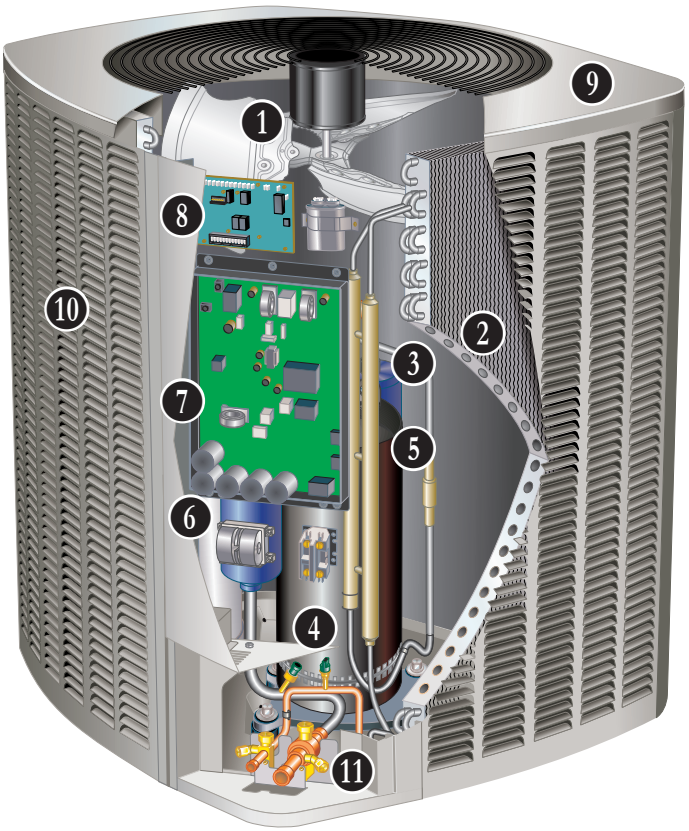


## CONTENTS


Approvals And Warranty . . . . . 3
Control Options . . . . . 7
Dimensions - Unit . . . . . 10
Expanded Sound Data . . . . . 9
Features . . . . . 3
Field Wiring . . . . . 9
Installation Clearances . . . . . 9
Model Number Identification. . . . . 1
Optional Accessories - Order Separately . . . . . 8
Specifications . . . . . 8
TXV Substitution - R-454B . . . . . 11
TXV Usage. . . . . 11

## APPROVALS AND WARRANTY

### APPROVALS

- AHRI Standard 210/240-2023 certified
- AHRI Certified system match-ups and expanded ratings, visit www.LennoxPros.com

**NOTE** - AHRI certified ratings are based on the following control conditions:
An Lennox® Communicating thermostat matched with a "communicating" indoor unit.
Any conventional non-communicating thermostat matched with a conventional "non-communicating" indoor unit.

- Sound rated to AHRI Standard 270-2008 test conditions
- Tested in Lennox' Research Laboratory environmental test room
- Rated According to U.S. Department of Energy (DOE) test procedures
- Unit and components ETL, NEC and CEC bonded for grounding to meet safety standards for servicing
- ETL certified (U.S. and Canada)
- ISO 9001 Registered Manufacturing Quality System

### WARRANTY

- Compressor:
  - Limited ten years in residential installations
  - Limited five years in non-residential installations
- All other covered components:
  - Limited five years in residential installations
  - Limited one year in non-residential installations

**NOTE** - Refer to Lennox® Basic Limited Warranty at www.Lennox.com for additional details.

## FEATURES

### APPLICATIONS

- 2 through 5 tons
- Sound levels as low as 66 dBA
- Single-phase power supply
- Vertical air discharge
- Applicable to indoor air handlers or gas furnaces with indoor add-on coils
- Suitable for coastal areas
- Factory test operated
- Shipped completely factory assembled, piped and wired

### REFRIGERATION SYSTEM

R-454B Refrigerant
- Low GWP (Global Warming Potential)
- Zero ODP (Ozone Depletion Potential)
- Low Toxicity/Lower Flammability - A2L
- Unit is factory pre-charged

**NOTE** - Total system refrigerant charge is dependent on outdoor unit size, indoor unit size and refrigerant line length.

**NOTE** - Refer to the unit-mounted charging sticker to determine correct amount of charge required.

1 Outdoor Coil Fan
- Direct drive fan
- PSC motor (024 and 048)
- ECM Motor (036 and 060)
- Vertical air discharge
- Totally enclosed fan motor
- Ball bearings
- Inherently protected
- PVC (polyvinyl chloride) coated steel fan guard

2 Quantum™ Coil
- Lennox designed and fabricated coil
- Enhanced aluminum alloy tube/enhanced fin coil
- Superior corrosion resistance
- Ripple-edged aluminum fins
- Aluminum tube construction
- Lanced fins for maximum fin surface exposure
- Fin collars grip tubing for maximum contact area
- Flared shoulder tubing connections
- Factory tested under high pressure
- Entire coil is accessible for cleaning

3 High Capacity Suction Line Drier
- Factory installed in the suction line
- Drier traps moisture or dirt that could contaminate the system
- 100% molecular-sieve, bead type, one-way drier

Low Pressure Transducer
- Protects the compressor from low pressure conditions such as low refrigerant charge, or low/no indoor airflow
- Shuts off unit if suction pressure falls below setting
- Provides loss of charge and freeze-up protection

## REFRIGERATION SYSTEM (continued)

4 High Pressure Switch
- Protects the system from high pressure conditions that can be a result of fan failure or a blocked/dirty coil
- Automatic reset

### Optional Accessories

Expansion Valve Kits
- Field installed on indoor units (if required)
- See TXV Usage table
- Chatleff-style fitting

Freezestat
- Protects the system from ice buildup on the indoor coil due to conditions such as low/no airflow, or low refrigerant charge
- Cycles compressor off when suction line temperature falls below freezestat setpoint
- Opens at 29°F and closes at 58°F
- Installs on or near the discharge line of the evaporator or on the suction line

Loss of Charge Switch Kit
- Protects compressor from damage from low/no refrigerant charge conditions
- SPST, normally-closed
- Automatic reset

Refrigerant Line Kits
- Refrigerant lines are shipped refrigeration clean
- Lines are cleaned, dried, pressurized and sealed at factory
- Suction line fully insulated
- Lines are stubbed at both ends

**NOTE** - EL18KCV is a variable capacity air conditioner utilizing variable speed compressor technology. With the variable speed compressor and variable pumping capacity, additional consideration must be given to refrigerant piping sizing and application.

Refer to the Installation Instructions for Line Set Requirements and Refrigerant Piping Guidelines

## INDOOR REFRIGERANT DETECTION SYSTEM (RDS)

- Complies with UL 60335-2-40 approved standard
- Required for all systems using R-454B refrigerant
- Factory or field installed on all indoor units
- Consists of a RDS refrigerant detection sensor and a mitigation control in the indoor unit
- Ensures safe operation for systems equipped with R-454B refrigerant
- Indoor sensor will detect any R-454B refrigerant
- If R-454B refrigerant is detected, the refrigerant detection system will stop compressor operation and operate the blower to reduce concentrations in the conditioned space
- Once safe levels are reached the HVAC system will resume normal operation
- Refer to indoor unit Product Specifications documents for additional details

## PRECISE COMFORT® TECHNOLOGY

The Variable Capacity Rotary Compressor and DC Inverter Control is an integrated system that operates together to reduce overall energy usage when compared to conventional air conditioners.

5 Variable Capacity Rotary Compressor
- High volumetric efficiency
- Uniform suction flow
- Constant discharge flow
- High efficiency
- Quiet operation
- Low gas pulses during compression reduces operational sound levels
- Compressor motor is internally protected from excessive current and temperature
- Compressor is installed in the unit on resilient rubber mounts for vibration free operation

6 Accumulator
- Standard in all models

Compressor Crankcase Heater
- Prevents migration of liquid refrigerant into compressor and ensures proper compressor lubrication

Compressor Sound Dampening System
- Polyethylene compressor cover
- 2-inch thick batt fiberglass insulation
- All open edges sealed with one-inch wide hook and loop fastening tape

## PRECISE COMFORT® TECHNOLOGY (continued)

### 7 DC Inverter Control

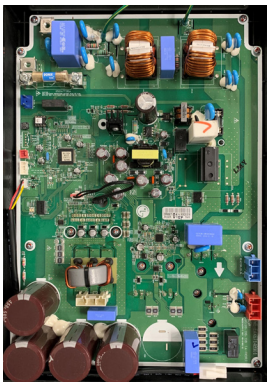

- Converts AC line voltage into filtered variable DC voltage
- Provides continuous compressor operation, while adjusting the capacity according to indoor temperature
- Adjusts compressor output in increments as small as 1%
- The accurate sensing of cooling load prevents frequent changes in capacity and ensures efficient, economical operation
- Power Factor Correction (PFC) circuit monitors the DC bus for high, low and abnormal voltage conditions to protect the compressor
- Two LEDS (red and green) indicate inverter operating status and aid in troubleshooting
- Noise filter reduces unwanted electromagnetic interference (EMI)
- The inverter reactor (mounted separately) adds inductance to the line between the inverter and the compressor to limit current rise and protect the compressor

## CONTROLS

### 8 Lennox® Communicating Control

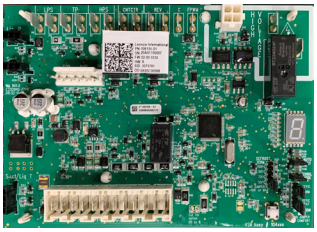

- Advanced control communicates information about various operating parameters in the air conditioner to the Lennox® Communicating Thermostat to constantly maintain the highest level of comfort, performance and efficiency available
- Auto Configuration - On start-up the control automatically sends a description of the unit to the Lennox® Communicating Thermostat to automatically configure the features available
- Control also features:
  - Seven-Segment Display - Shows information about outdoor unit type and capacity and also displays alerts for common fault conditions (electrical and mechanical)
  - Low Voltage Protection - Prevents compressor operation when voltage is not within the specified range
  - High pressure switch monitoring with provisions for lockout
  - Five-Strike lockout protection protects compressor
  - Liquid and suction line temperature and sensor monitoring
  - EEPROM storage of all local configurations
  - Non-volatile memory storage of 100 alarm codes with display of last 10 codes for troubleshooting
  - Built-in low-ambient control

**NOTE** - Two RAST connectors for a conventional heating/cooling thermostat are also provided for connection to the control. A two-stage or single-stage thermostat can be used.

### Low Ambient Operation

- Air conditioner can operate down to 0°F outdoor air temperature

**NOTE** - A freezestat is recommended for extra protection during low ambient operation.

### Climate IQ™ Technology

- Optimizes dehumidification settings for specific climates to improve home comfort during cooling operation

### Lennox® Communicating Thermostat Settings:

- Climate IQ (Auto) - Dry, Normal, Basic and Humid modes are automatically set based on the difference between the measured relative humidity and the relative humidity setting
- All modes are selected on the Lennox® Communicating Thermostat

### Outdoor Air Temperature Sensor

- Used with Lennox® Communicating Thermostats
- Sensor allows thermostat to display outdoor temperature
- Sensor is auto-detected when connected to thermostat

## Optional Accessories

### Thermostat

**NOTE** - The EL18KCV Air Conditioner can be used with an Lennox® Communicating Thermostat matched with a "communicating" indoor unit, or a conventional non-communicating thermostat matched with a "non-communicating" indoor unit.

| Thermostat | Model No. | Indoor Unit Type |
|---|---|---|
| Communicating | S40 | Communicating |
| Non-Communicating | E40, M40 | Non-Communicating |
| | Conventional thermostat | |

- Thermostat is not furnished with unit
- See page 7

## FEATURES

### CABINET

9
- Heavy-gauge steel construction
- Pre-painted powder paint cabinet finish
- Tested to the International Cyclic Salt Fog/UV Exposure Standard, ASTM D5894, for excellent corrosion protection
- Louvered steel panels surround unit on all four sides
- Control box is conveniently located with all controls factory wired
- Corner patch plate allows access to compressor components
- Drainage holes are provided in base section for moisture removal
- High density polyethylene unit support feet raise the unit off of the mounting surface, away from damaging moisture

Zinc-Coated Steel Unit Base
- Durable zinc-coated base section resists rust and corrosion

10 Louvered Coil Protection
- Steel louvered panels provides complete coil protection
- Panels are hinged to allow easy cleaning and servicing of coils
- Panels may be completely removed
- Interlocking tabs and slots assure tight fit on cabinet

11 Refrigerant Line Connections, Electrical Inlets and Service Valves
- Sweat connection suction and liquid lines
- Located on corner of unit cabinet
- Suction valve can be fully shut off, while liquid valve may be front seated to manage refrigerant charge while servicing system
- Refrigerant line connections and field wiring inlets are located in one central area of the cabinet
- See dimension drawing

Braze-Free/Press Fitting Flexibility
- Units can accommodate braze-free or press fittings for installation versatility

## CONTROL OPTIONS

### S40 Smart Wi-Fi Thermostat

- Recognizes and connects to all Lennox ® Communicating products to automatically configure and control the heating/cooling system
- Advanced communicating controls in specific heating and cooling units, PureAir™ S Air Purification System and Healthy Climate® HRV/ERV (Heat/Energy) Recovery Ventilators transmit information about various operating parameters to the thermostat to constantly maintain the most comfortable and efficient operating conditions possible
- Lennox Smart Room Sensors, Lennox Wireless Extenders and Lennox Smart Air Quality Monitor can be added to the system
- One-Touch Away Mode, Smart Away™ (geo-fencing), equipment maintenance reminders and scheduling
- Smart home automation compatible with Amazon Alexa®, Google Assistant, Control4®, Building36®, Matter and IFTTT
- Lennox® Home App controls temperature, fan operation, set programs/schedules and set Away mode on a smartphone
- Lennox Smart Tech App allows the installer to commission the system and remotely turn the system on and off during setup or service call on a smartphone

### E40 Smart Wi-Fi Thermostat

- 3 Htg.-2 Clg.
- 7-day, universal, programmable, touchscreen thermostat
- Controls dehumidification during cooling mode and humidification during heating mode
- Smooth Setback Recovery and compressor short-cycle protection
- One-Touch Away Mode, Smart Away™ (geo-fencing), equipment maintenance reminders and scheduling
- Smart home automation compatible with Amazon Alexa®, Google Assistant, Control4®, Building36®, Matter and IFTTT
- Lennox® Home App controls temperature, fan operation, set programs/schedules and set Away mode on a smartphone
- Lennox Smart Tech App allows the installer to commission the system and remotely turn the system on and off during setup or service call on a smartphone

### M40 Smart Wi-Fi Thermostat

- 3 Htg.-2 Clg.
- 7-day, universal, programmable, touchscreen thermostat
- Smooth Setback Recovery and compressor short-cycle protection
- One-Touch Away Mode, Smart Away™ (geo-fencing), equipment maintenance reminders and scheduling
- Smart home automation compatible with Amazon Alexa®, Google Assistant, Control4®, Building36®, Matter and IFTTT
- Lennox® Home App controls temperature, fan operation, set programs/schedules and set Away mode on a smartphone
- Lennox Smart Tech App allows the installer to commission the system and remotely turn the system on and off during setup or service call on a smartphone

**NOTE** - Please refer to the individual Product Specifications for these products for full information.

## CONTROLS - ORDERING

| | | |
|---|---|---|
| S40 Smart Wi-Fi Thermostat | 5 x 7-1/4 x 1 | **22V24** |
| E40 Smart Wi-Fi Thermostat | 3-3/8 x 5-3/8 x 1 | **30L26** |
| Lennox® Smart Room Sensor | 4 x 5-1/2 x 3 | **22V25** |
| Lennox® Smart Air Quality Monitor | 3-5/8 x 4-3/8 x 1-3/8 | **21P02** |
| Lennox® Wireless Extender | 4 x 5-1/2 x 2-1/2 | **22V26** |
| M40 Smart Wi-Fi Thermostat | 3-5/16 x 4-5/16 x 7/8 | **30L27** |
| **Thermostat Accessories** | | |
| [1] Discharge Air Temperature Sensor (For S40, E40) | | **88K38** |
| [2] Remote Outdoor Air Temperature Sensor (For dual-fuel and Humiditrol®) | | **X2658** |

[1] Optional for service diagnostics (S40/E40).

[2] Remote Outdoor Air Temperature Sensor is used with conventional (non-Lennox® Communicating) outdoor units (sensor is furnished with Lennox® Communicating outdoor units). Allows the thermostat to display outdoor temperature. Required in dual-fuel and Humiditrol® applications.

## SPECIFICATIONS — ALL REGIONS

| Size | | 024 | 036 | 048 | 060 |
|---|---|---|---|---|---|
| **Nominal Tonnage** | | 2 | 3 | 4 | 5 |
| **Sound Rating Number Range** | dBA | 67-70 | 66-76 | 72-76 | 67-79 |
| **Connections (Sweat)** | Liquid line (OD) - in. | 3/8 | 3/8 | 3/8 | 3/8 |
| | Suction line (OD) - in. | 3/4 | 7/8 | 7/8 | 1-1/8 |
| **Compressor Type** | | Variable Rotary | Variable Rotary | Variable Rotary | Variable Rotary |
| **Refrigerant (15 ft. Line Set)** | [1] R-454B charge furnished | 6 lbs. 3 oz. | 6 lbs. 7 oz. | 9 lbs. 8 oz. | 9 lbs. 10 oz. |
| **Refrigerant (30 ft. Line Set)** | [1] R-454B charge furnished | 6 lbs. 12 oz. | 7 lbs. 0 oz. | 10 lbs. 1 oz. | 10 lbs. 3 oz. |
| **Indoor Unit Expansion Valve (TXV)** | | **26Z70** | **26Z70** | **26Z71** | **26Z72** |
| **Outdoor Coil** | Net face area - ft.[2] Outer coil | 23.63 | 23.63 | 23.63 | 23.33 |
| | Inner coil | - - - | - - - | 22.79 | 22.60 |
| | Tube diameter - in. | 5/16 | 5/16 | 5/16 | 5/16 |
| | Rows | 1 | 1 | 2 | 2 |
| | Fins - in. | 22 | 22 | 22 | 22 |
| **Outdoor Fan** | HP | 1/8 | 1/3 | 1/4 | 1/3 |
| | Diameter - in. | 22 | 22 | 22 | 26 |
| | Blades | 2 | 4 | 4 | 3 |
| | Cfm | 2840 | 3955 | 3660 | 4180 |
| | Rpm | 825 | 300 - 1200 | 825 | 300 - 1200 |
| | Watts | 130 | 258 | 290 | 201 |
| **Shipping Data - lbs.** | | 250 | 265 | 270 | 270 |

## ELECTRICAL DATA

| | | | | | |
|---|---|---|---|---|---|
| | Line voltage data (Volts-Phase-Hz) | 208/230-1-60 | 208/230-1-60 | 208/230-1-60 | 208/230-1-60 |
| | [2] Maximum overcurrent protection (MOCP) amps | 25 | 35 | 50 | 60 |
| | [3] Minimum circuit ampacity (MCA) | 15 | 23.4 | 28.7 | 36.5 |
| **Compressor** | Rated load amps | 10.8 | 15.8 | 20.5 | 25.7 |
| **Fan Motor** | Full load amps | 0.74 | 2.6 | 1.7 | 2.6 |

## OPTIONAL ACCESSORIES - ORDER SEPARATELY

| | | | | | | |
|---|---|---|---|---|---|---|
| **[5] Freezestat** | 3/8 in. | **93G35** | • | • | • | • |
| **Refrigerant Line Sets** Liquid x Suction OD \| Insulation Thickness \| Length | 3/8 x 3/4 \| 3/8 \| 20 ft. | **89J56** | • | | | |
| | 3/8 x 3/4 \| 3/8 \| 30 ft. | **89J57** | | | | |
| | 3/8 x 3/4 \| 3/8 \| 50 ft. | **89J59** | | | | |
| | 3/8 x 7/8 \| 3/8 \| 30 ft. | **89J60** | | • | • | |
| | 3/8 x 7/8 \| 3/8 \| 50 ft. | **89J62** | | | | |
| | 3/8 x 1-1/8 \| 3/8 \| 50 ft. | **73P91** | | | | • |

NOTE - Extremes of operating range are plus 10% and minus 5% of line voltage.

[1] Refrigerant charge sufficient for the line set length listed in parenthesis. For longer line set requirements see the Installation Instructions or unit Charging Label for information about line set length and additional refrigerant charge required.

[2] HACR type breaker or fuse.

[3] Refer to National or Canadian Electrical Code manual to determine wire, fuse and disconnect size requirements.

[4] Used with the Lennox® S40 Smart Wi-Fi Thermostat for optional service diagnostics.

[5] Freezestat is recommended for low ambient operation.

## EXPANDED SOUND DATA

| Size | Octave Band Sound Power Levels dBA, re $10^{-12}$ Watts Center Frequency - HZ | | | | | | | [1] Sound Rating Number (dBA) | [2] Estimated Sound Pressure Level at Distance From Unit (dBA at distance in ft.) | | | | |
|---|---|---|---|---|---|---|---|---|---|---|---|---|---|
| | 125 | 250 | 500 | 1000 | 2000 | 4000 | 8000 | | 3 | 5 | 10 | 15 | 50 |
| 024 Min. | 53.5 | 58.5 | 62.5 | 61 | 59 | 56.5 | 56 | 67 | 60 | 55 | 49 | 46 | 35 |
| 024 Max. | 54 | 58.5 | 66.5 | 63.5 | 62 | 60.5 | 56.5 | 70 | 63 | 58 | 52 | 49 | 38 |
| 036 Min. | 53 | 56 | 60.5 | 59 | 58 | 53 | 54 | 66 | 59 | 54 | 48 | 45 | 34 |
| 036 Max. | 62 | 63 | 68 | 71 | 70.5 | 66.5 | 61 | 76 | 69 | 64 | 58 | 55 | 44 |
| 048 Min. | 56.5 | 62 | 67.5 | 67.5 | 63.5 | 61.5 | 58 | 72 | 65 | 60 | 54 | 51 | 40 |
| 048 Max. | 56 | 65 | 70.5 | 69.5 | 67.5 | 67.5 | 57 | 76 | 69 | 64 | 58 | 55 | 44 |
| 060 Min. | 52.5 | 58 | 63 | 59 | 60.5 | 56.5 | 51 | 67 | 60 | 55 | 49 | 46 | 35 |
| 060 Max. | 59 | 64.5 | 72 | 73.5 | 70.5 | 71 | 57.5 | 79 | 72 | 67 | 61 | 58 | 47 |

NOTE - The octave sound power data does not include tonal correction.

[1] Tested according to AHRI Standard 270-2008 test conditions. Sound rating Number is the overall A-Weighted Sound Power Level, (LWA), dB (100 Hz to 10,000 Hz).

[2] Estimated sound pressure level at distance based on AHRI Standard 275-2010 method for equipment located on the ground, roof, or on side of building wall with no adjacent reflective surface within 9.8 feet. Sound pressure levels will increase based on changes to assumptions. For other applications, refer to AHRI Standard 275.

## FIELD WIRING

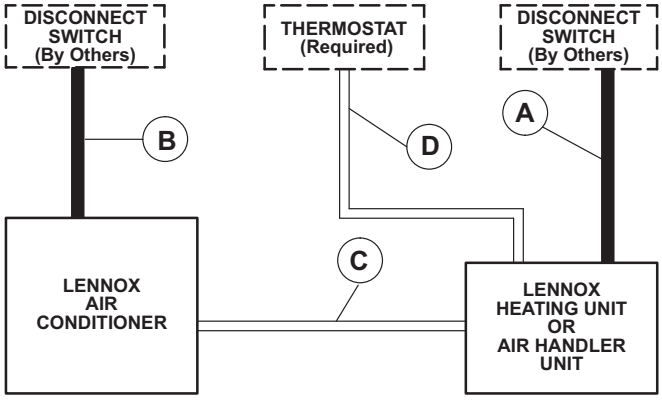


**A** - Two Wire Power

**B** - Two Wire Power (see Electrical Data)

**C - Lennox® Communicating Thermostat:**
- Four Wire, 18AWG (RSBus)

**C - Conventional Thermostat:**
- Four Wire Low Voltage, 18AWG

**D - Lennox® Communicating Thermostat:**
- Four Wire, 18 to 22AWG (RSGBus) standard thermostat cable for terminals (R, C, I+, I-).

**D - Conventional Thermostat:**
- Six Wire Low Voltage, 18AWG

*NOTE - All wiring must conform to NEC or CEC and local electrical codes.*

*NOTE - Refer to the S40 Installation Instructions for optional wiring connections for communicating thermostats.*

*NOTE - Field wiring not furnished.*

## INSTALLATION CLEARANCES

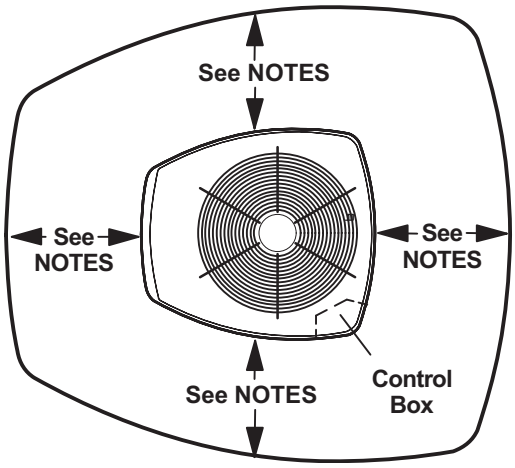


**NOTES:**

- Service Clearance – 30 in. (762 mm) on one of the sides adjacent to the Control Box.
- One of other three sides must be 36 in. (914 mm).
- One of the two remaining sides may be 12 in. (305 mm).
- The remaining side may be 6 in. (152 mm).
- 48 in. (1219 mm) clearance required on top of unit
- 24 in. (610 mm) required between two units

## DIMENSIONS - UNIT

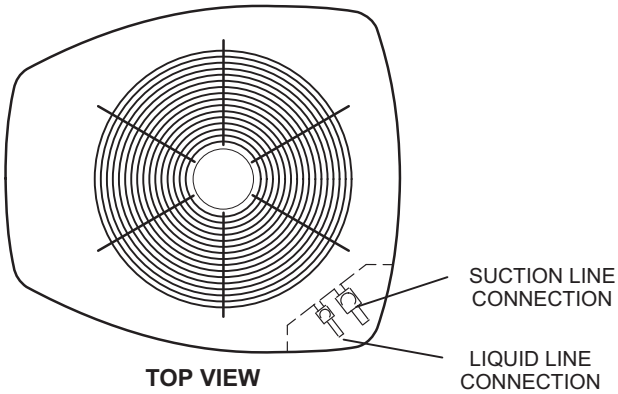


**TOP VIEW**

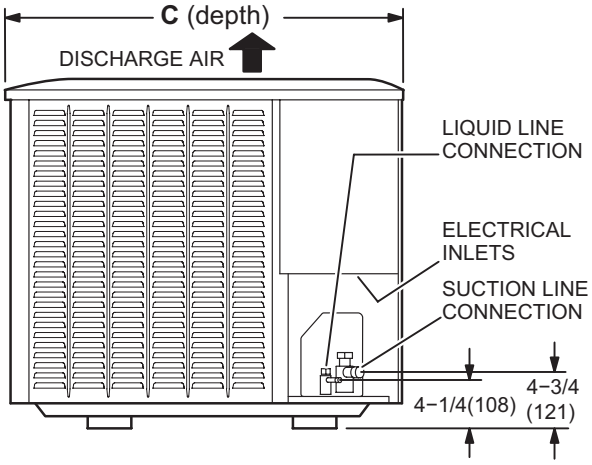


**END VIEW**

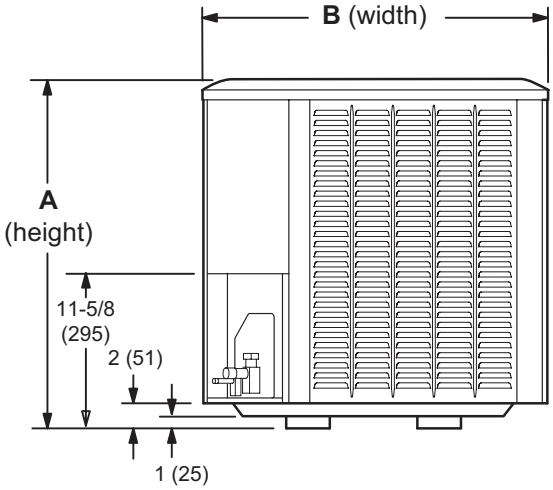


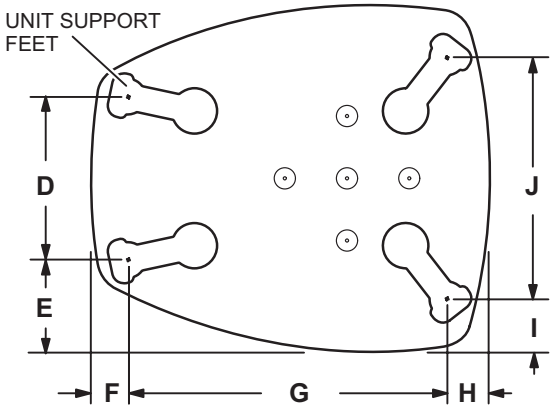


**BASE SECTION**
**(Medium and Large Base)**

| Size | A (Height) | | B (Width) | | C (Depth) | | D | | E | | F | | G | | H | | I | | J | |
|---|---|---|---|---|---|---|---|---|---|---|---|---|---|---|---|---|---|---|---|---|
| | in. | mm | in. | mm | in. | mm | in. | mm | in. | mm | in. | mm | in. | mm | in. | mm | in. | mm | in. | mm |
| 024 | 45 | 1143 | 30-1/2 | 775 | 35 | 889 | 13-7/8 | 352 | 7-3/4 | 197 | 3-1/4 | 83 | 27-1/8 | 689 | 3-5/8 | 92 | 4-1/2 | 114 | 20-5/8 | 524 |
| 036 | 45 | 1143 | 30-1/2 | 775 | 35 | 889 | 13-7/8 | 352 | 7-3/4 | 197 | 3-1/4 | 83 | 27-1/8 | 689 | 3-5/8 | 92 | 4-1/2 | 114 | 20-5/8 | 524 |
| 048 | 45 | 1143 | 30-1/2 | 775 | 35 | 889 | 13-7/8 | 352 | 7-3/4 | 197 | 3-1/4 | 83 | 27-1/8 | 689 | 3-5/8 | 92 | 4-1/2 | 114 | 20-5/8 | 524 |
| 060 | 39 | 991 | 35-1/2 | 902 | 39-1/2 | 1003 | 16-7/8 | 429 | 8-3/4 | 222 | 3-1/8 | 79 | 30-3/4 | 781 | 4-5/8 | 117 | 3-3/4 | 95 | 26-7/8 | 683 |

## TXV USAGE

All Lennox coils and air handlers are shipped with a factory installed TXV. In most cases, no substitution is needed.

If a different size TXV is required, it will be listed in the "TXV SUBSTITUTION" table by size. The correct TXV must be ordered separately and field installed.

| Size | Order Number |
|---|---|
| 024 | **26Z70** |
| 036 | **26Z70** |
| 048 | **26Z71** |
| 060 | **26Z72** |

## AHRI STANDARD 210/240-2023

Standard Ratings relating to cooling or heating capacities shall be net values, including the effects of circulating-fan heat, but not including supplementary electric heat. Power input used for calculating efficiency shall be the Total Power.

Standard Ratings of units which do not have indoor air-circulating fans furnished as part of the model, i.e., Coil-only System, shall be established by subtracting from the total cooling capacity 1,505 Btu/h per 1,000 SCFM, and by adding the same amount to the heating capacity for non-mobile-home, non-Space Constrained units. Total Power for both heating and cooling shall be increased by 441 W per 1,000 SCFM of indoor air circulated.

## TXV SUBSTITUTION - R-454B

A general guide for replacing the factory installed R-454B TXV if the indoor unit (coil/air handler) is larger or smaller than the outdoor unit.

| Outdoor Unit | | Indoor Unit | | Indoor TXV Furnished | Indoor TXV Replacement |
|---|---|---|---|---|---|
| Size | Tons | Size | Tons | | |
| 024 | 2 | 42 | 3.5 | **26Z71** | **26Z70** |
| 024 | 2 | 48 | 4 | **26Z71** | **26Z70** |
| 024 | 2 | 49 | 4 | **26Z71** | **26Z70** |
| 024 | 2 | 50/60 | 4/5 | **26Z71** | **26Z70** |
| 024 | 2 | 51/61 | 4/5 | **26Z71** | **26Z70** |
| 024 | 2 | 60 | 5 | **26Z72** | **26Z70** |
| 036 | 3 | 42 | 3.5 | **26Z71** | **26Z70** |
| 036 | 3 | 48 | 4 | **26Z71** | **26Z70** |
| 036 | 3 | 49 | 4 | **26Z71** | **26Z70** |
| 036 | 3 | 50/60 | 4/5 | **26Z71** | **26Z70** |
| 036 | 3 | 51/61 | 4/5 | **26Z71** | **26Z70** |
| 036 | 3 | 60 | 5 | **26Z72** | **26Z70** |
| 048 | 4 | 30/36 | 2.5/3 | **26Z70** | **26Z71** |
| 048 | 4 | 36 | 3 | **26Z70** | **26Z71** |
| 048 | 4 | 60 | 5 | **26Z72** | **26Z71** |
| 060 | 5 | 50/60 | 4/5 | **26Z71** | **26Z72** |
| 060 | 5 | 51/61 | 4/5 | **26Z71** | **26Z72** |

**TXV Ranges:**

**26Z70** - 1.5 to 3 ton systems - Use on 3 ton (036) and lower systems.

**26Z71** - 3.5-4 ton systems - Use on 4 ton (048) and down to 3.5 ton (042) systems.

**26Z72** - 5 ton systems - Use on 5 ton (060) systems only.

## REVISIONS

| Sections | Description of Change |
|---|---|
| Control Options | Updated to reflect latest product offering. |

**Visit us at www.Lennox.com**
**For the latest technical information, www.LennoxPros.com**
**Contact us at 1-800-4-LENNOX**

NOTE - Due to Lennox' ongoing commitment to quality, Specifications, Ratings and Dimensions subject to change without notice and without incurring liability.
Improper installation, adjustment, alteration, service or maintenance can cause property damage or personal injury.
Installation and service must be performed by a qualified installer and servicing agency.

©2026 Lennox Industries, Inc.