AIR HANDLERS

CBA25UHE

MERIT® Series

R-410A - Upflow / Horizontal - Constant Torque Blower Motor - 60Hz

RESIDENTIAL PRODUCT SPECIFICATIONS

Bulletin No. 211047
June 2023

MERIT® SERIES

LENNOX QUANTUM™ COIL

Nominal Capacity - 2 to 3.5 Tons
Optional Electric Heat - 4 to 15 kW

MODEL NUMBER IDENTIFICATION

CB A 25 UH E - 030 - 230 - 01

Unit Type
CB = Air Handler

Refrigerant Type
A = Aluminum Coil/R-410A

Series

Configuration
UH = Upflow/Horizontal

Blower Motor
E = High Efficiency Constant Torque Blower Motor

Nominal Cooling Capacity
024 = 2 tons
030 = 2.5 tons
036 = 3 tons
042 = 3.5 tons

Voltage
230 = 208/230V-1 phase-60hz

Minor Revision Number

FEATURE HIGHLIGHTS

1. Quantum™ Coil
2. Refrigerant Line Connections
3. Check and Expansion Valve
4. Power Saver™ Constant Torque Blower Motor
5. Heavy Gauge Steel Cabinet
6. Anti-Microbial Dual Position Drain Pans
7. Air Filter
8. Transformer
9. Electric Heat (option)

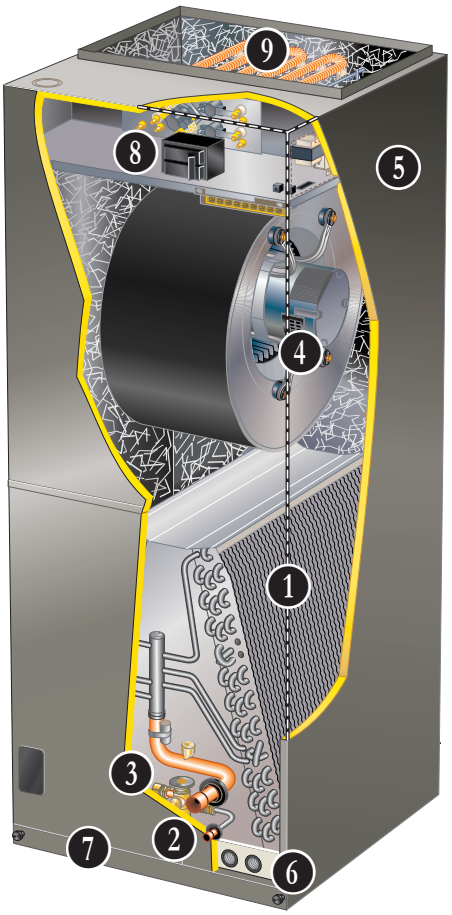

CONTENTS

Approvals And Warranty . . . 3
Blower Data . . . 7
Dimensions - Accessories . . . 14
Dimensions - Unit . . . 12
Electrical Data . . . 6
Electric Heat Data . . . 8
Features . . . 3
Installation Clearances With Electric Heat . . . 6
Optional Accessories - Order Separately . . . 6
Replacement Circuit Breakers . . . 11
Specifications . . . 6

APPROVALS AND WARRANTY

APPROVALS

- Tested with matching air conditioners and heat pump units in the Lennox Research Laboratory environmental test room in accordance with AHRI Standard 210/240-2023
- AHRI Certified system match-ups and expanded ratings, visit www.LennoxPros.com
- ETL Listed to US and Canadian safety standards and components within are bonded for grounding to meet safety standards for servicing required by NEC and CEC
- Optional electric heaters are ETL listed and rated in accordance with US Department of Energy (DOE) test procedures and Federal Trade Commission (FTC) labeling regulations
- Blower performance data according to unit tests conducted in Lennox air test chamber
- Approved for installation in manufactured housing and mobile homes
- ISO 9001 Registered Manufacturing Quality System

WARRANTY

- All covered components
  - Limited five years in residential applications
  - Limited one year in non-residential applications

NOTE - Refer to Lennox® Basic Limited Warranty at www.Lennox.com for additional details.

FEATURES

APPLICATIONS

- 2 to 3.5 ton nominal sizes
- Upflow or horizontal applications

NOTE - Downflow applications require optional conversion kit.

- Applicable to R-410A expansion valve systems in cooling applications and check and expansion valve systems in heat pump applications
- Wide-range check and expansion valve is factory installed
- Optional field installed electric heaters available in several sizes for additive heating capacity

REFRIGERANT SYSTEM

1 Quantum™ Coil

- Lennox designed and fabricated coil
- Enhanced aluminum alloy tube/enhanced fin coil for superior corrosion resistance
- Aluminum tubing, hairpins, distributor and header tubes.
- Ripple-edged aluminum fins
- Twin coil construction assembled in a "A" configuration for large surface area
- Provides excellent heat transfer and low air resistance for maximum efficiency
- Precise circuiting for uniform refrigerant distribution
- Lanced fins provide maximum exposure of fin surface to air stream
- Rifled tubing provides superior heat transfer
- Coil thoroughly factory tested under high pressure to ensure leakproof construction

2 Refrigerant Line Connections

- Copper refrigerant sweat connections on both liquid and suction lines for easy brazing
- Lines extend outside of the cabinet for ease of connection
- See dimension drawings for locations

3 Check and Expansion Valve

- For use with R-410A systems
- Wide range valve with Chatleff style fitting
- Factory installed on all models, internal to cabinet

BLOWER

4 Power Saver™ Constant Torque Blower Motor

- Programmable high efficiency multi-speed blower motor
- By maintaining constant torque output, blower motor can deliver more uniform (but not constant) airflow over the static pressure range

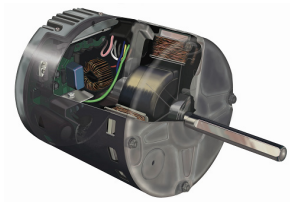

- Programmable multi-speed operation is achieved by the use of an ECM (Electronically Commutated Motor) motor
- Leadless blower motor features simple plug-in connections
- Choice of blower speeds is available
- See blower Data tables
- Blower speed change is easily accomplished by a simple wiring change

Blower Assembly

- Each blower is statically and dynamically balanced as an assembly before installation in the unit
- Blower motor is resiliently mounted to blower assembly
- Blower slides out of cabinet for servicing

FEATURES

CABINET

5
- Constructed of heavy gauge galvanized steel
- Pre-painted cabinet finish
- Completely insulated with foil faced fiberglass insulation
- Removable panels provide complete service access
- Filter access door for easy filter replacement
- Thumbscrews hold filter door in place
- Electrical inlets provided in sides and top of cabinet
- See dimension drawing for locations
- Plugs in cabinet for drain connections for upflow (left and right) and horizontal applications
- See dimension drawing

Low Leakage Cabinet
- All models have less than 2% air leakage and meet ANSI/ASHRAE Standard 193-2010 "Method of Test for Determining the Air Tightness of HVAC Equipment"

Upflow/Horizontal Capability (Optional Downflow)
- Shipped for upflow and horizontal right-hand discharge
- May be field converted to horizontal left-hand air discharge by repositioning horizontal drain pan
- Optional downflow kit required for field conversion

6 Anti-Microbial Dual Position Drain Pans
- Anti-Microbial additive resists growth of mold and mildew on drain pan which improves indoor air quality and reduces drain line blockage
- Drain pans designed for upflow or horizontal applications
- Deep, corrosion resistant high temperature engineered polymer drain pans have dual pipe drains
- See dimension drawing

Optional Accessories

Downflow Conversion Kit
- Required for field conversion to downflow position
- Kit consists of insulated downflow drain pan, insulated drain pan drip shields, coil drip shields, seal plates and support brackets for repositioning coil and drain pan

Horizontal Support Frame Kit
- Provides support of unit in horizontal applications
- Consists of (2) 1 x 1-1/2 x 32-5/8 in. and (2) 1 x 3 x 53-7/8 in. painted heavy gauge cold rolled steel support channels with assembly and suspending holes
- Bolts and nuts furnished for field assembly
- Suspending rods must be field provided

Side Return Unit Stand (Upflow Only)
- Raises unit 16 in. above floor for side return air duct connection
- Eliminates need for wooden platform construction
- All aluminum construction
- Two adjustable frames fit all sizes

Wall Hanging Bracket Kit (Upflow Only)
- Allows unit to be hung on wall at any height
- Consists of heavy-gauge steel support brackets (one for air handler, one for wall mount)
- Screws furnished for fastening one bracket to unit
- Bolts for fastening one bracket to wall are field provided

High Performance Economizer
(Commercial Applications Only)
- Designed for applications requiring outdoor air to be utilized in a commercial HVAC system
- Allows the entry of fresh outdoor air for free cooling, reducing the requirement for mechanical cooling
- Heavy gauge galvanized steel cabinet lined with thick fiberglass insulation
- Mixed air sensor, outdoor air sensor and 24VAC transformer furnished
- Approved for California Title 24 building standards
- ASHRAE 90.1-2010 compliant
- See separate Product Specifications bulletin for additional information and available control and sensor options

FILTER

7
- Disposable 1 inch filter is furnished
- Filter rack furnished in cabinet for easy filter installation
- See Specifications tables for filter sizes

FEATURES

CONTROLS

8 Transformer
- 24 volt transformer furnished as standard
- Factory installed in the unit control box
- Terminal strip furnished

Optional Accessories

M30 Smart Wi-Fi Thermostat
- Wi-Fi-enabled, electronic 7-day, universal, multi-stage, programmable, touchscreen thermostat
- 4 Heat/2 Cool
- Auto-changeover
- Dual-fuel control with optional outdoor sensor
- Controls dehumidification during cooling mode and humidification during heating mode

- Offers enhanced capabilities including humidification / dehumidification / dewpoint measurement and control, Humiditrol® control, and equipment maintenance reminders
- Easy to read 4.3 in. color touchscreen (measured diagonally)
- LCD display with backlight shows the current and set temperature, time, inside relative humidity, system status (operating mode and schedules) and outside temperature (optional outdoor sensor required)
- Smooth Setback Recovery starts system early to achieve setpoint at start of program period
- Compressor short-cycle protection (5 minutes)
- Up to four separate schedules are available plus Schedule IQ™
- One-Touch Away Mode - A quick and easy way to set the cooling and heating setpoints while away
- Smart Away™ - Uses geo-fencing technology to determine when the homeowner is within a predetermined distance from the home to operate the system when leaving, away and arriving
- Wi-Fi remote monitoring and adjustment through a home wireless network for desktop PCs, laptops and apps for smartphones or tablets
- Smart home automation compatible with Amazon Alexa®, Google Assistant and IFTTT

NOTE - See the Lennox® M30 Smart Wi-Fi Thermostat Product Specifications bulletin in the Controls section for more information.

Remote Outdoor Temperature Sensor
- Used with the Lennox® M30 Smart Thermostat
- Outdoor sensor allows thermostat to display outdoor temperature

NOTE - Sensor is required for the Enhanced Dehumidification Accessory (EDA).

Thermostat
- Thermostat is not furnished with unit
- Lennox Price Book for selection

OPTIONAL ELECTRIC HEAT

9
- ETL listed
- Field install internal to unit cabinet
- Available in several kW sizes
- See Electric Heat tables
- Helix wound nichrome heating elements exposed directly in air stream resulting in instant heat transfer, low element temperatures and long service life
- Each element equipped with accurately located limit control with fixed temperature off setting and automatic reset
- Thermal sequencer relay brings elements on and off line, in sequence and equal increments, with time delay between each
- Heating control relay(s) furnished as standard
- Factory assembled with controls installed and wired
- Electric heat control wiring plugs into mating connector on air handler unit

Circuit Breaker (CB) Models
- All "CB" model heaters are equipped with circuit breakers for overload and short circuit protection
- Factory wired and mounted on electric heat unit
- Current sensitive and temperature actuated
- Manual reset
- Flexible plastic circuit breaker cover protects circuit breaker in areas with high humidity or unconditioned areas to prevent nuisance tripping
- Circuit breakers qualify as disconnect means at unit in many areas, eliminate the need for field provided disconnect
- Consult local electrical code in your area

Optional Accessories

Single-Point Power Source Control Box
- Control Box may be used with optional electric heat when single power supply is connected to multi-circuit electric heat
- Field installs external to the unit cabinet on either side or top
- Constructed of heavy gauge steel, baked enamel finish, prepunched mounting holes, electrical inlet knockouts, and terminal strip
- Removeable cover provides easy access
- Dimensions (H x W x D) - 7 x 7 x 4 in.

SPECIFICATIONS

	Model Number	CBA25UHE-024	CBA25UHE-030	CBA25UHE-036	CBA25UHE-042
General Data	Nominal tonnage	2	2.5	3	3.5
	Factory Installed Expansion Valve	**12J18**	**12J18**	**12J19**	**12J20**
Connections	Suction/Vapor line (o.d.) - in. sweat	3/4	3/4	7/8	7/8
	Liquid line (o.d.) - in. sweat	3/8	3/8	3/8	3/8
	Condensate - in. fpt	(2) 3/4	(2) 3/4	(2) 3/4	(2) 3/4
Indoor Coil	Net face area - ft.[2]	3.77	4.72	5.66	5.66
	Tube outside diameter - in.	3/8	3/8	3/8	3/8
	Number of rows	3	3	3	3
	Fins per inch	15	15	15	15
Blower	Wheel nominal diameter x width - in.	10 x 8	10 x 8	10 x 8	12 x 10
	Blower motor output - hp	1/2	1/2	1/2	3/4
[1] Filters	Size of filter - in.	15 x 20 x 1	15 x 20 x 1	18 x 20 x 1	18 x 20 x 1
Shipping Data -1 package - lbs.		127	133	163	168

ELECTRICAL DATA

Voltage - 1 phase (60 hz)	208/230V	208/230V	208/230V	208/230V
[2] Maximum overcurrent protection (unit only)	15	15	15	15
[3] Minimum circuit ampacity (unit only)	5	5	5	8
Blower Motor Full Load Amps	4.1	4.1	4.1	6.0

[1] Disposable filter.
[2] HACR type circuit breaker or fuse.
[3] Refer to National or Canadian Electrical Code manual to determine wire, fuse and disconnect size requirements. Use wires suitable for at least 167°F.

OPTIONAL ACCESSORIES - ORDER SEPARATELY

Model	-024 -030	-036	-042
M30 Smart Wi-Fi Thermostat	**15Z69**	**15Z69**	**15Z69**
Remote Outdoor Temperature Sensor	**X2658**	**X2658**	**X2658**
Downflow Conversion Kit	**Y9658**	**Y9659**	**Y9659**
Electric Heat - See Electric Heat Data Tables	**4 to 15 kW**		
Horizontal Support Frame Kit	**56J18**	**56J18**	**56J18**
Side Return Unit Stand (Upflow Only)	**45K32**	**45K32**	**45K32**
Single-Point Power Source Control Box (for Electric Heat)	**21H39**	**21H39**	**21H39**
Wall Hanging Bracket Kit (Upflow Only)	**45K30**	**45K30**	**45K30**
High Performance Economizer (Commercial Only)	**10U53**	**10U53**	**10U53**

INSTALLATION CLEARANCES WITH ELECTRIC HEAT

Cabinet	0 inch (0 mm)
To Plenum	0 inch (0 mm)
To Outlet Duct within 3 feet (914 mm)	0 inch (0 mm)
Floor	0 inch (0 mm) See Note #1
Service / Maintenance	See Note #2

[1] Units installed on combustible floors in the downflow position with electric heat do not require a downflow combustible flooring base.
[2] Front service access - 24 inches (610 mm) minimum.
NOTE - If cabinet depth is more than 24 inches (610 mm), allow a minimum of the cabinet depth plus 2 inches (51 mm).

BLOWER DATA

CBA25UHE-024 PERFORMANCE

External Static Pressure in. w.g.	Air Volume / Watts at Various Blower Speeds									
	Tap 1		Tap 2		Tap 3		Tap 4		Tap 5	
	cfm	Watts	cfm	Watts	cfm	Watts	cfm	Watts	cfm	Watts
0.10	676	64	728	78	820	107	1015	180	1054	194
0.20	612	71	679	81	780	114	981	188	1020	203
0.30	514	77	614	93	752	120	953	195	987	212
0.40	448	83	517	102	712	126	922	204	958	219
0.50	400	86	461	106	678	133	899	210	940	226
0.60	337	92	406	112	598	142	865	219	902	235
0.70	270	100	346	119	535	147	831	224	881	241
0.80	203	103	280	127	495	153	799	237	833	248

NOTE - All air data measured external to unit with dry coil and 1 inch non-pleated air filter in place.
Electric heaters have no appreciable air resistance.

CBA25UHE-030 PERFORMANCE

External Static Pressure in. w.g.	Air Volume / Watts at Various Blower Speeds									
	Tap 1		Tap 2		Tap 3		Tap 4		Tap 5	
	cfm	Watts	cfm	Watts	cfm	Watts	cfm	Watts	cfm	Watts
0.10	775	87	898	125	999	160	1132	219	1341	346
0.20	731	94	863	131	965	168	1099	229	1309	357
0.30	690	100	830	138	936	175	1068	237	1289	364
0.40	647	106	793	145	899	184	1041	245	1259	376
0.50	565	115	755	152	870	191	1014	254	1239	385
0.60	522	118	725	160	833	197	985	261	1197	389
0.70	474	125	635	168	797	208	957	269	1168	395
0.80	406	132	590	174	715	218	928	278	1139	403

NOTE - All air data measured external to unit with dry coil and 1 inch non-pleated air filter in place.
Electric heaters have no appreciable air resistance.

CBA25UHE-036 PERFORMANCE

External Static Pressure in. w.g.	Air Volume / Watts at Various Blower Speeds									
	Tap 1		Tap 2		Tap 3		Tap 4		Tap 5	
	cfm	Watts	cfm	Watts	cfm	Watts	cfm	Watts	cfm	Watts
0.10	865	94	1103	162	1303	250	1415	312	1523	386
0.20	812	104	1060	172	1268	261	1381	325	1492	399
0.30	747	113	1013	184	1234	271	1352	336	1462	411
0.40	674	119	970	193	1199	283	1316	348	1434	423
0.50	620	125	915	205	1153	295	1285	360	1403	434
0.60	565	131	841	214	1117	306	1238	377	1363	452
0.70	484	138	790	221	1047	323	1202	386	1315	456
0.80	422	144	754	229	1004	326	1134	396	1281	467

NOTE - All air data measured external to unit with dry coil and 1 inch non-pleated air filter in place.
Electric heaters have no appreciable air resistance.

BLOWER DATA

CBA25UHE-042 PERFORMANCE

External Static Pressure in. w.g.	Air Volume / Watts at Various Blower Speeds									
	Tap 1		Tap 2		Tap 3		Tap 4		Tap 5	
	cfm	Watts	cfm	Watts	cfm	Watts	cfm	Watts	cfm	Watts
0.10	982	132	1275	270	1446	390	1560	473	1656	569
0.20	923	140	1233	280	1413	402	1526	488	1624	581
0.30	866	148	1199	287	1362	411	1500	498	1594	591
0.40	812	153	1159	296	1357	420	1469	510	1563	602
0.50	745	162	1120	304	1325	429	1437	520	1543	613
0.60	686	169	1081	312	1292	438	1413	530	1505	615
0.70	642	176	1029	322	1257	448	1345	543	1456	613
0.80	568	185	981	331	1221	458	1335	544	1417	612

NOTE - All air data measured external to unit with dry coil and 1 inch non-pleated air filter in place.
Electric heaters have no appreciable air resistance.

ELECTRIC HEAT DATA — CBA25UHE-024 | SINGLE PHASE

	Electric Heat Model Number	Input			Blower Motor Full Load Amps	[2] Minimum Circuit Ampacity	[3] Maximum Overcurrent Protection
		Volt	kW	[1] Btuh			
4 kW	ECBA25-4 (**19V31**) Terminal Block ECBA25-4CB (**19V32**) 30A Circuit Breaker	208	3.0	10,250	4.1	23	[4] **25**
		220	3.4	11,450	4.1	24	[4] **25**
		230	3.7	12,550	4.1	25	[4] **25**
		240	4.0	13,650	4.1	26	30
5 kW	ECBA25-5 (**16Y36**) Terminal Block ECBA25-5CB (**16Y39**) 30A Circuit Breaker	208	3.6	12,300	4.1	27	30
		220	4.0	13,800	4.1	28	30
		230	4.4	15,000	4.1	29	30
		240	4.8	16,400	4.1	30	30
7.5 kW	ECBA25-7.5 (**16Y37**) Terminal Block ECBA25-7.5CB (**16Y41**) 45A Circuit Breaker	208	5.6	19,200	4.1	39	[4] **40**
		220	6.3	21,500	4.1	41	45
		230	6.9	23,500	4.1	43	45
		240	7.5	25,600	4.1	44	45
10 kW	ECBA25-10 (**16Y38**) Terminal Block ECBA25-10CB (**16Y42**) 60A Circuit Breaker	208	7.2	24,600	4.1	48	[4] **50**
		220	8.0	27,500	4.1	51	60
		230	8.8	30,000	4.1	53	60
		240	9.6	32,700	4.1	55	60

NOTE - Circuit 1 Minimum Circuit Ampacity includes the Blower Motor Full Load Amps.
[1] Electric heater capacity only - does not include additional blower motor heat capacity.
[2] Refer to National or Canadian Electrical Code manual to determine wire, fuse and disconnect size requirements. Use wires suitable for at least 167°F.
[3] HACR type breaker or fuse.
[4] Bold indicates that the circuit breaker on "CB" circuit breaker models must be replaced with size shown. See table on page 11.

ELECTRIC HEAT DATA — CBA25UHE-030 | SINGLE PHASE

	Electric Heat Model Number	Input			Blower Motor Full Load Amps	[2] Minimum Circuit Ampacity		[3] Maximum Overcurrent Protection		Single Point Power Source	
		Volt	kW	[1] Btuh		Ckt 1	Ckt 2	Ckt 1	Ckt 2	[2] Minimum Circuit Ampacity	[3] Maximum Overcurrent Protection
4 kW	ECBA25-4 (**19V31**) Terminal Block ECBA25-4CB (**19V32**) 30A Circuit Breaker	208	3.0	10,250	4.1	23	- - -	[4] **25**	- - -	- - -	- - -
		220	3.4	11,450	4.1	24	- - -	[4] **25**	- - -	- - -	- - -
		230	3.7	12,550	4.1	25	- - -	[4] **25**	- - -	- - -	- - -
		240	4.0	13,650	4.1	26	- - -	30	- - -	- - -	- - -
5 kW	ECBA25-5 (**16Y36**) Terminal Block ECBA25-5CB (**16Y39**) 30A Circuit Breaker	208	3.6	12,300	4.1	27	- - -	30	- - -	- - -	- - -
		220	4.0	13,800	4.1	28	- - -	30	- - -	- - -	- - -
		230	4.4	15,000	4.1	29	- - -	30	- - -	- - -	- - -
		240	4.8	16,400	4.1	30	- - -	30	- - -	- - -	- - -
7.5 kW	ECBA25-7.5 (**16Y37**) Terminal Block ECBA25-7.5CB (**16Y41**) 45A Circuit Breaker	208	5.6	19,200	4.1	39	- - -	[4] **40**	- - -	- - -	- - -
		220	6.3	21,500	4.1	41	- - -	45	- - -	- - -	- - -
		230	6.9	23,500	4.1	43	- - -	45	- - -	- - -	- - -
		240	7.5	25,600	4.1	44	- - -	45	- - -	- - -	- - -
10 kW	ECBA25-10 (**16Y38**) Terminal Block ECBA25-10CB (**16Y42**) 60A Circuit Breaker	208	7.2	24,600	4.1	48	- - -	[4] **50**	- - -	- - -	- - -
		220	8.0	27,500	4.1	51	- - -	60	- - -	- - -	- - -
		230	8.8	30,000	4.1	53	- - -	60	- - -	- - -	- - -
		240	9.6	32,700	4.1	55	- - -	60	- - -	- - -	- - -
12.5 kW	ECBA25-12.5CB (**16Y43**) (1) 50A and (1) 25A Circuit Breaker	208	9.4	32,000	4.1	43	19	[4] **45**	[4] **20**	62	70
		220	10.5	35,800	4.1	45	20	[4] **45**	[4] **20**	65	70
		230	11.5	39,200	4.1	47	21	50	25	68	70
		240	12.5	42,600	4.1	49	22	50	25	70	70
15 kW	ECBA25-15CB (**16Y44**) (1) 60A and (1) 25A Circuit Breaker	208	10.8	36,900	4.1	48	22	[4] **50**	25	70	70
		220	12.1	41,300	4.1	51	23	60	25	74	80
		230	13.2	45,100	4.1	53	24	60	25	77	80
		240	14.4	49,100	4.1	55	25	60	25	80	80

NOTE - Circuit 1 Minimum Circuit Ampacity includes the Blower Motor Full Load Amps.

[1] Electric heater capacity only - does not include additional blower motor heat capacity.

[2] Refer to National or Canadian Electrical Code manual to determine wire, fuse and disconnect size requirements. Use wires suitable for at least 167°F.

[3] HACR type breaker or fuse.

[4] Bold indicates that the circuit breaker on "CB" circuit breaker models must be replaced with size shown. See table on page 11.

ELECTRIC HEAT DATA — CBA25UHE-036 | SINGLE PHASE

	Electric Heat Model Number	Input			Blower Motor Full Load Amps	[2] Minimum Circuit Ampacity		[3] Maximum Overcurrent Protection		Single Point Power Source	
		Volt	kW	[1] Btuh		Ckt 1	Ckt 2	Ckt 1	Ckt 2	[2] Minimum Circuit Ampacity	[3] Maximum Overcurrent Protection
4 kW	ECBA25-4 (**19V31**) Terminal Block ECBA25-4CB (**19V32**) 30A Circuit Breaker	208	3.0	10,250	4.1	23	- - -	[4] **25**	- - -	- - -	- - -
		220	3.4	11,450	4.1	24	- - -	[4] **25**	- - -	- - -	- - -
		230	3.7	12,550	4.1	25	- - -	[4] **25**	- - -	- - -	- - -
		240	4.0	13,650	4.1	26	- - -	30	- - -	- - -	- - -
5 kW	ECBA25-5 (**16Y36**) Terminal Block ECBA25-5CB (**16Y39**) 30A Circuit Breaker	208	3.6	12,300	4.1	27	- - -	30	- - -	- - -	- - -
		220	4.0	13,800	4.1	28	- - -	30	- - -	- - -	- - -
		230	4.4	15,000	4.1	29	- - -	30	- - -	- - -	- - -
		240	4.8	16,400	4.1	30	- - -	30	- - -	- - -	- - -
7.5 kW	ECBA25-7.5 (**16Y37**) Terminal Block ECBA25-7.5CB (**16Y41**) 45A Circuit Breaker	208	5.6	19,200	4.1	39	- - -	[4] **40**	- - -	- - -	- - -
		220	6.3	21,500	4.1	41	- - -	45	- - -	- - -	- - -
		230	6.9	23,500	4.1	43	- - -	45	- - -	- - -	- - -
		240	7.5	25,600	4.1	44	- - -	45	- - -	- - -	- - -
10 kW	ECBA25-10 (**16Y38**) Terminal Block ECBA25-10CB (**16Y42**) 60A Circuit Breaker	208	7.2	24,600	4.1	48	- - -	[4] **50**	- - -	- - -	- - -
		220	8.0	27,500	4.1	51	- - -	60	- - -	- - -	- - -
		230	8.8	30,000	4.1	53	- - -	60	- - -	- - -	- - -
		240	9.6	32,700	4.1	55	- - -	60	- - -	- - -	- - -
12.5 kW	ECBA25-12.5CB (**16Y43**) (1) 50A and (1) 25A Circuit Breaker	208	9.4	32,000	4.1	43	19	[4] **45**	[4] **20**	62	70
		220	10.5	35,800	4.1	45	20	[4] **45**	[4] **20**	65	70
		230	11.5	39,200	4.1	47	21	50	25	68	70
		240	12.5	42,600	4.1	49	22	50	25	70	70
15 kW	ECBA25-15CB (**16Y44**) (1) 60A and (1) 25A Circuit Breaker	208	10.8	36,900	4.1	48	22	[4] **50**	25	70	70
		220	12.1	41,300	4.1	51	23	60	25	74	80
		230	13.2	45,100	4.1	53	24	60	25	77	80
		240	14.4	49,100	4.1	55	25	60	25	80	80

NOTE - Circuit 1 Minimum Circuit Ampacity includes the Blower Motor Full Load Amps.

[1] Electric heater capacity only - does not include additional blower motor heat capacity.

[2] Refer to National or Canadian Electrical Code manual to determine wire, fuse and disconnect size requirements. Use wires suitable for at least 167°F.

[3] HACR type breaker or fuse.

[4] Bold indicates that the circuit breaker on "CB" circuit breaker models must be replaced with size shown. See table on page 11.

ELECTRIC HEAT DATA — CBA25UHE-042 | SINGLE PHASE

Electric Heat Model Number		Input			Blower Motor Full Load Amps	[2] Minimum Circuit Ampacity		[3] Maximum Overcurrent Protection		Single Point Power Source	
		Volt	kW	[1] Btuh		Ckt 1	Ckt 2	Ckt 1	Ckt 2	[2] Minimum Circuit Ampacity	[3] Maximum Overcurrent Protection
4 kW	ECBA25-4 (**19V31**) Terminal Block ECBA25-4CB (**19V32**) 30A Circuit Breaker	208	3.0	10,250	6.0	26	- - -	30	- - -	- - -	- - -
		220	3.4	11,450	6.0	27	- - -	30	- - -	- - -	- - -
		230	3.7	12,550	6.0	27	- - -	30	- - -	- - -	- - -
		240	4.0	13,650	6.0	28	- - -	30	- - -	- - -	- - -
5 kW	ECBA25-5 (**16Y36**) Terminal Block ECBA25-5CB (**16Y39**) 30A Circuit Breaker	208	3.6	12,300	6.0	29	- - -	30	- - -	- - -	- - -
		220	4.0	13,800	6.0	30	- - -	30	- - -	- - -	- - -
		230	4.4	15,000	6.0	31	- - -	[4] **35**	- - -	- - -	- - -
		240	4.8	16,400	6.0	33	- - -	[4] **35**	- - -	- - -	- - -
7.5 kW	ECBA25-7.5 (**16Y37**) Terminal Block ECBA25-7.5CB (**16Y41**) 45A Circuit Breaker	208	5.6	19,200	6.0	41	- - -	45	- - -	- - -	- - -
		220	6.3	21,500	6.0	43	- - -	45	- - -	- - -	- - -
		230	6.9	23,500	6.0	45	- - -	45	- - -	- - -	- - -
		240	7.5	25,600	6.0	47	- - -	[4] **50**	- - -	- - -	- - -
10 kW	ECBA25-10 (**16Y38**) Terminal Block ECBA25-10CB (**16Y42**) 60A Circuit Breaker	208	7.2	24,600	6.0	51	- - -	60	- - -	- - -	- - -
		220	8.0	27,500	6.0	53	- - -	60	- - -	- - -	- - -
		230	8.8	30,000	6.0	55	- - -	60	- - -	- - -	- - -
		240	9.6	32,700	6.0	58	- - -	60	- - -	- - -	- - -
12.5 kW	ECBA25-12.5CB (**16Y43**) (1) 50A and (1) 25A Circuit Breaker	208	9.4	32,000	6.0	45	19	[4] **45**	[4] **20**	64	70
		220	10.5	35,800	6.0	47	20	50	[4] **20**	67	70
		230	11.5	39,200	6.0	49	21	50	25	70	70
		240	12.5	42,600	6.0	51	22	[4] **60**	25	73	80
15 kW	ECBA25-15CB (**16Y44**) (1) 60A and (1) 25A Circuit Breaker	208	10.8	36,900	6.0	51	22	60	25	73	80
		220	12.1	41,300	6.0	53	23	60	25	76	80
		230	13.2	45,100	6.0	55	24	60	25	79	80
		240	14.4	49,100	6.0	58	25	60	25	83	90

NOTE - Circuit 1 Minimum Circuit Ampacity includes the Blower Motor Full Load Amps.

[1] Electric heater capacity only - does not include additional blower motor heat capacity.

[2] Refer to National or Canadian Electrical Code manual to determine wire, fuse and disconnect size requirements. Use wires suitable for at least 167°F.

[3] HACR type breaker or fuse.

[4] Bold indicates that the circuit breaker on "CB" circuit breaker models must be replaced with size shown. See table on page 11.

REPLACEMENT CIRCUIT BREAKERS

Voltage	Description	Catalog No.
208/240V - 1 Phase	25 amp, 2 pole	**41K13**
	30 amp, 2 pole	**17K70**
	35 amp, 2 pole	**72K07**
	40 amp, 2 pole	**49K14**
	45 amp, 2 pole	**17K71**
	50 amp, 2 pole	**41K12**
	60 amp, 2 pole	**17K72**

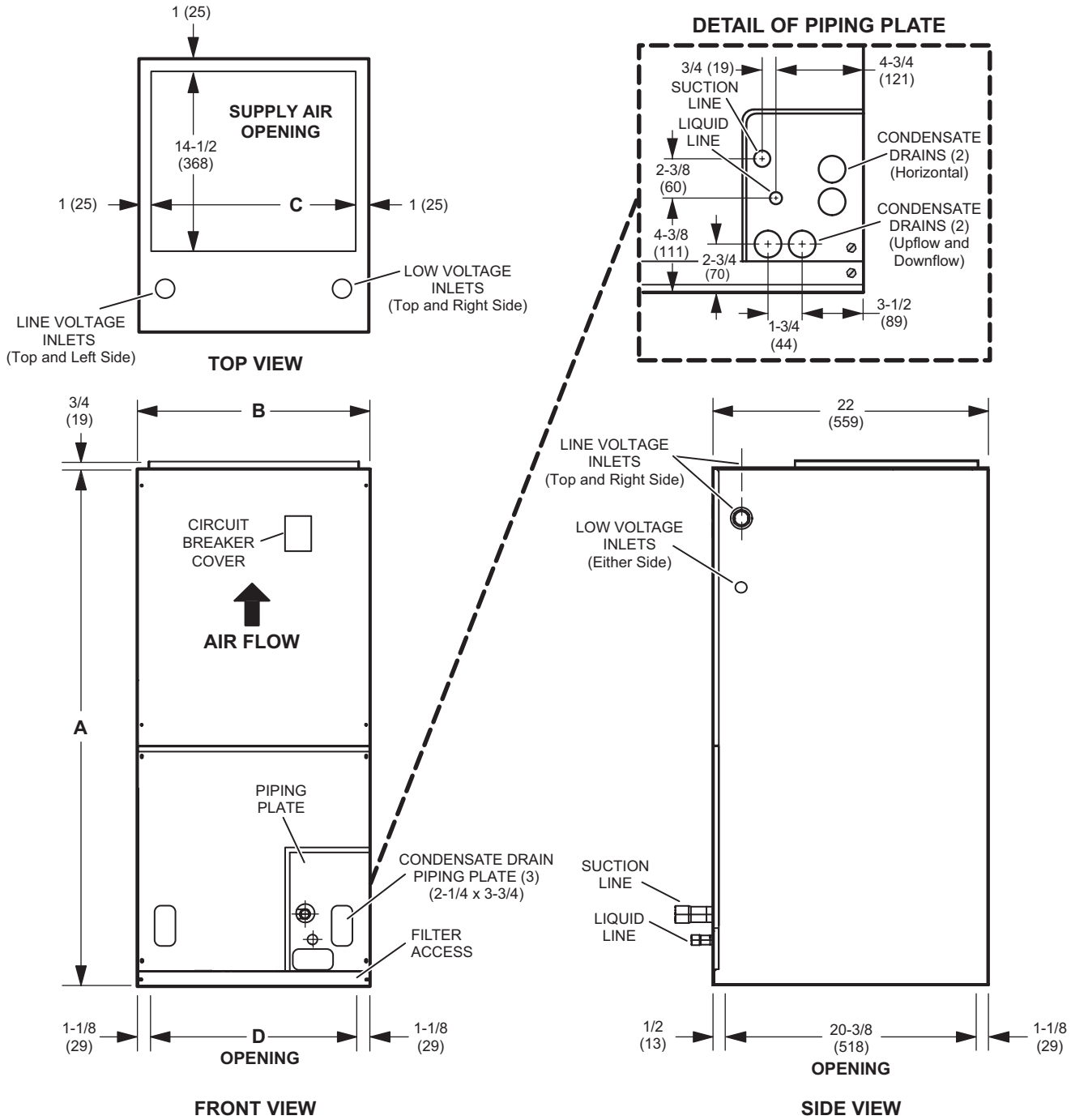

Dimensions	024		030		036, 042	
	in.	mm	in.	mm	in.	mm
A	45-1/2	1156	47	1194	53-5/8	1362
B	18-1/2	470	18-1/2	470	21-1/2	546
C	16-1/2	419	16-1/2	419	19-1/2	495
D	16-1/4	413	16-1/4	413	19-1/4	489

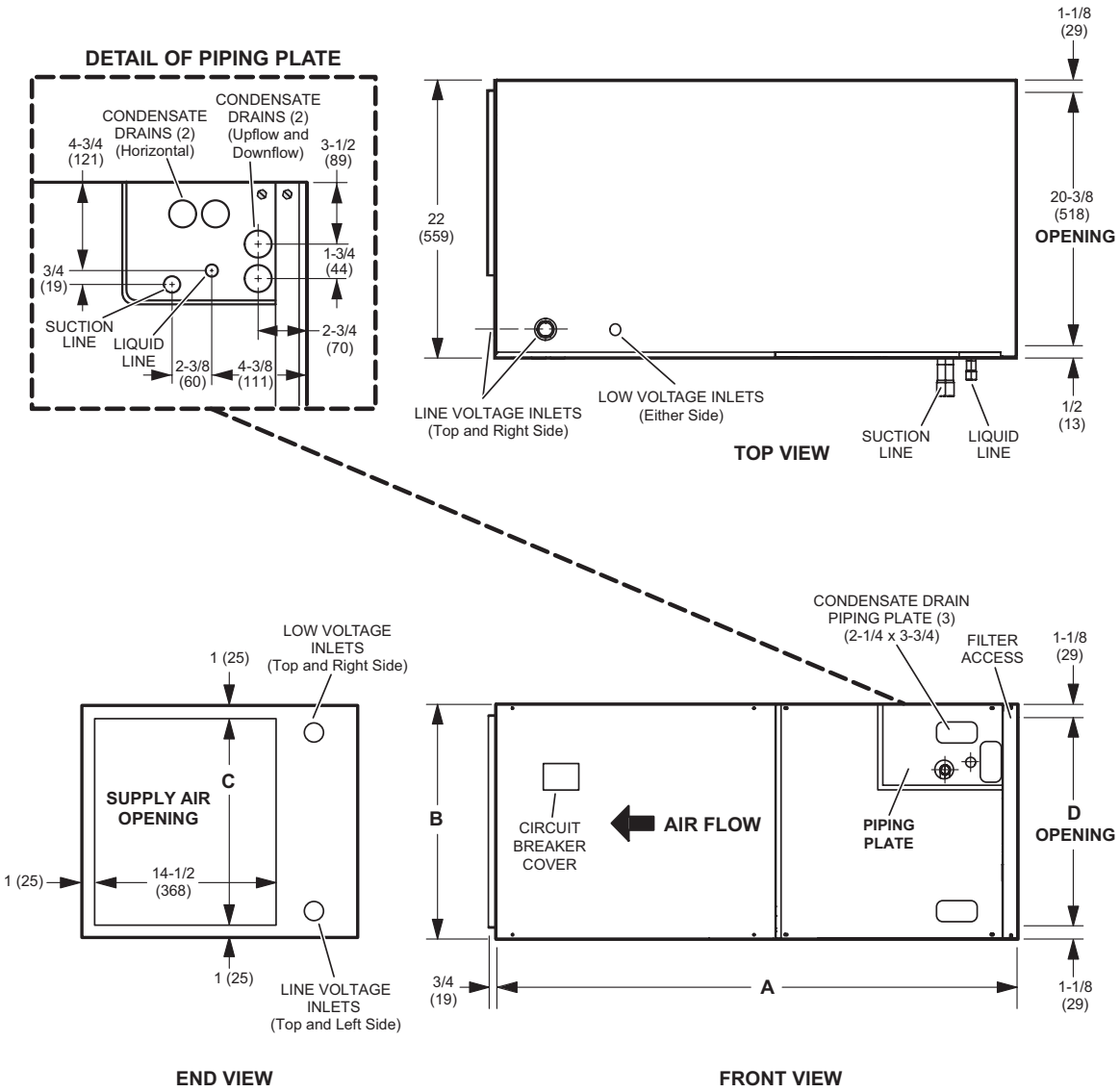

Dimensions	024		030		036, 042	
	in.	mm	in.	mm	in.	mm
A	45-1/2	1156	47	1194	53-5/8	1362
B	18-1/2	470	18-1/2	470	21-1/2	546
C	16-1/2	419	16-1/2	419	19-1/2	495
D	16-1/4	413	16-1/4	413	19-1/4	489

HORIZONTAL SUPPORT FRAME KIT

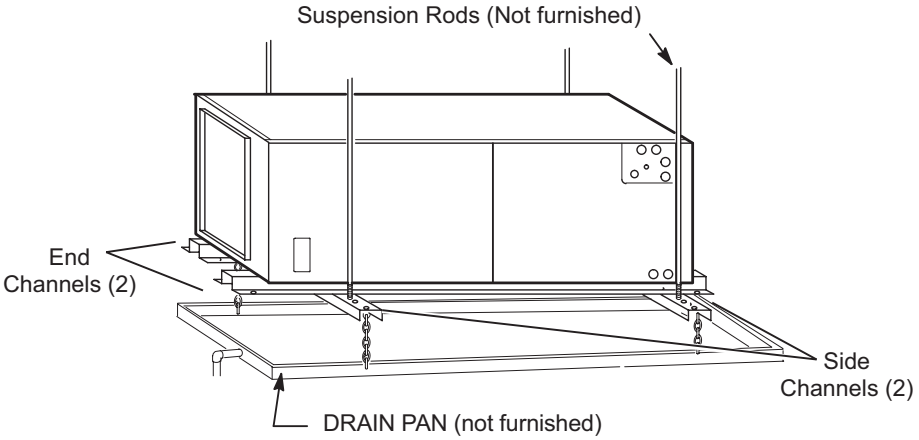

Includes (2) 1 x 1-1/2 x 32-5/8 in. side channels and
(2) 1 x 3 x 53-7/8 in. end channels.

SIDE RETURN UNIT STAND
(Upflow Only)

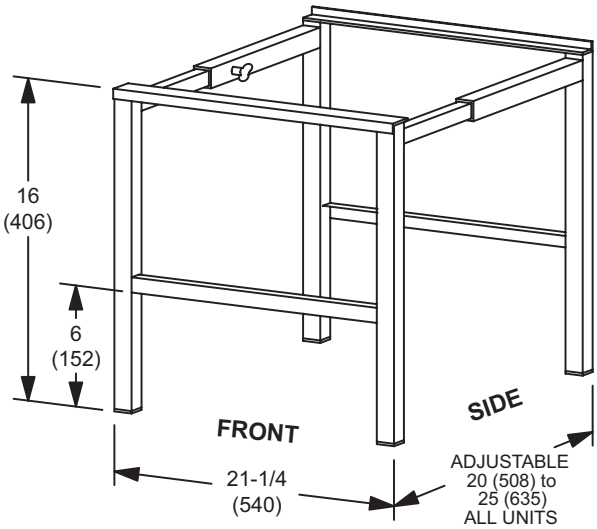

Visit us at www.Lennox.com
For the latest technical information, www.LennoxPros.com
Contact us at 1-800-9-LENNOX

NOTE - Due to Lennox' ongoing commitment to quality, Specifications, Ratings and Dimensions subject to change without notice and without incurring liability.
Improper installation, adjustment, alteration, service or maintenance can cause property damage or personal injury.
Installation and service must be performed by a qualified installer and servicing agency.

©2023 Lennox Industries, Inc.