LF25-125-400

UNIT HEATERS

60Hz

COMMERCIAL
PRODUCT SPECIFICATIONS (EHB)

Steady-State Efficiency - up to 83%
Input - 125,000 to 400,000 Btuh

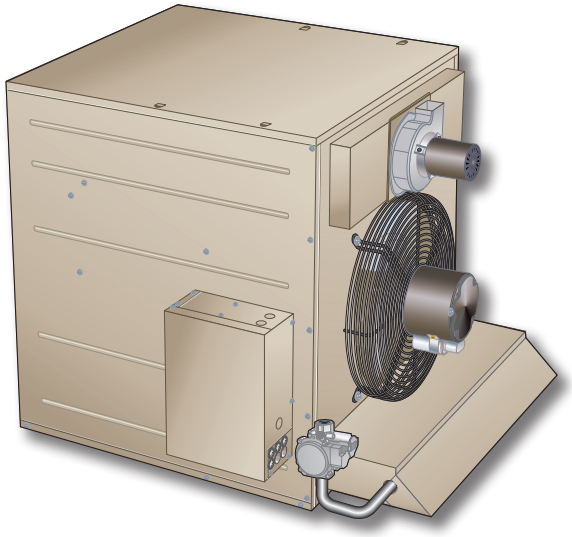

LF25-125-200
Single-Stage Heating

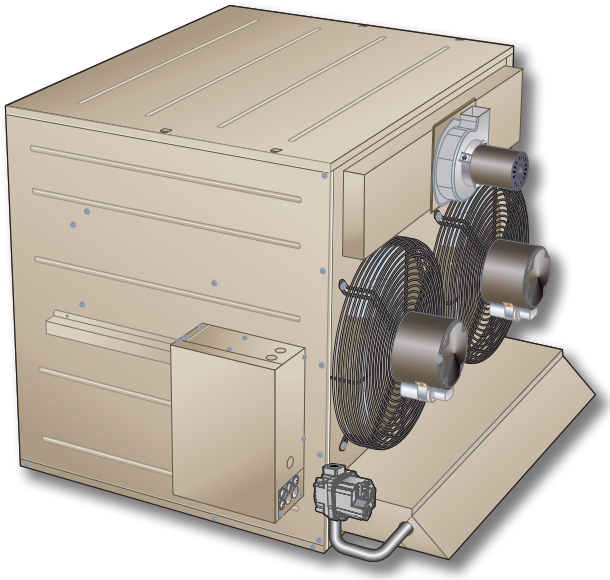

LF25-250-400
Two-Stage Heating

MODEL NUMBER IDENTIFICATION

LF 25 - 200 A - 1

Unit Type
LF = Lennox Unit Heater

Series

Nominal Gas Heat Input
125 = 125,000 Btuh | 250 = 250,000 Btuh
150 = 150,000 Btuh | 300 = 300,000 Btuh
175 = 175,000 Btuh | 350 = 350,000 Btuh
200 = 200,000 Btuh | 400 = 400,000 Btuh

Heat Exchanger Type
A = Aluminized Steel
S = Stainless Steel

Minor Design Sequence
1 = 1st Generation
2 = 2nd Generation

CONTENTS

Dimensions - Accessories 9
Dimensions - Unit 7
Electrical Data 4
Features And Benefits 2
Installation Clearances 6
Model Number Identification. 1
Optional Accessories - Gas Heat 5
Optional Accessories - Order Separately 5
Optional Conventional Temperature Control Systems 11
Specifications 4
Vent Kits And Accessories 10

WARRANTY AND APPROVALS

WARRANTY

- Heat Exchanger - Stainless steel - fifteen year limited
- Heat Exchanger - Aluminized steel - ten year limited
- All other covered components - Limited one year

APPROVALS

- CSA International certified
- Certified for natural or LPG/Propane gas.
- ISO 9001 Registered Manufacturing Quality System

Form Number 210900 | September 2025
Supersedes all previous versions

FEATURES AND BENEFITS

APPLICATIONS

- Single Stage Heating - LF25-125 through LF25-200
- Two-Stage Heating - LF25-250 through LF25-400
- Steady-state heating efficiencies of up to 83%
- Ideal for economical commercial heating systems
- Shipped completely assembled with controls factory installed and wired
- Factory to ensure proper operation and dependability
- Units may be vented horizontally or vertically

NOTE - Installer must locate unit, make unit gas supply, flue, electrical connections and mount thermostat to complete job.

HEATING SYSTEM

Tubular Aluminized or Stainless Steel Heat Exchanger

- Tubular heat exchanger is constructed of aluminized or stainless steel for superior resistance to corrosion and oxidation
- Curved design allows complete exposure of heating surfaces to supply air stream
- Dimpled tubes for maximum heat transfer
- Compact design reduces space requirements in unit cabinet
- Heat exchanger has been laboratory life cycle tested

Inshot Burner Assembly

- Aluminized steel inshot burner provides efficient trouble free operation
- Burner venturi mixes air and gas in correct proportion for proper combustion
- Burner assembly is removable from the unit as a single component for ease of service

Single-Stage Gas Control Valve (LF25-125-200 models)

- 24 volt redundant combination gas control valve
- Combines manual shut off switch (On-Off), automatic electric valve (dual) and gas pressure regulation into a compact combination control

Two-Stage Gas Control Valve (LF25-250-400 models)

- 24 volt redundant combination two-stage gas control valve
- Combines manual shut off switch (On-Off), automatic electric valve (dual) and gas pressure regulation into a compact combination control

Combustion Air Inducer

- Prepurges heat exchanger
- Safely vents combustion products
- Operates only during heating cycle
- Blower motor has ball bearings and is thermally protected
- Combustion air inducer on LF25-125 through LF25-150 units may be rotated 90° to left or right of vertical to facilitate installation

Pressure Switch

- Pressure switch prevents unit operation in case of blocked flue outlet

Limit Control(s)

- Factory installed and accurately located
- Limit control has fixed temperature setting
- Protects heating system from abnormal operating conditions

Flame Rollout Switch

- Automatic reset switch is factory installed on front of the burner box

Optional Accessories

Natural Gas to LPG/Propane Conversion Kit

- Required for field changeover from natural gas to LPG/Propane

NOTE - See Optional Accessories - Gas Heat for proper kit selection at different elevations.

High Altitude Conversion Kit - Natural Gas

- Required on all units for proper unit operation at altitudes from 4001 to 10,000 ft. (US) and 6501 to 9500 ft. (Canada)

High Altitude Pressure Switch Kit

- Required for proper unit operation at various elevations

FEATURES AND BENEFITS

CONTROLS

Combination Direct Spark Ignition/Fan Timer Control

- Electronic direct spark ignition control provides positive and safe main burner ignition
- Spark is intermittent and occurs only when required
- Separate electronic flame sensor control assures safe and reliable operation
- Should loss of flame occur, flame sensor controls will initiate 5 attempts at re-ignition before locking out unit operation
- Control board contains all necessary controls and relays to operate unit
- Includes: Fan timer control - fan on 30 seconds (fixed), fan off 150 seconds (fixed), terminal strip for thermostat connections, diagnostic LED for troubleshooting
- Direct plug-in wiring harness

Transformer

- 120V/24V transformer furnished as standard

Optional Accessories

Thermostats

- For thermostat options, see Optional Conventional Temperature Control Systems on page 11

VENTING

- Units may be vented horizontally or vertically
  - **Vertical Venting** - LF25 units are approved for installation with single wall and type B-1 double wall vent pipe
  - **Horizontal Venting** - LF25 units are approved for installation with single wall or UL listed, Cat III stainless steel vent kits

Optional Accessories

Horizontal Vent Kits

- UL listed, Cat III stainless steel vent kits are available for upward or downward slope
- 4 and 5 in. vent kits snap together
- 6 in. vent kit include connection clamps
- Kits include unit transition, vent termination and wall thimble
- Upward slope kits have drain connection
- 5 in. downward slope kits have double male adaptor
- Provisions for hanging must be field supplied
- 45° or 90° elbow is available and required for certain size units where the combustion air inducer cannot be rotated 90°
- Straight pipe sections in various lengths are also available

NOTE - See Horizontal Vent Kits / Elbow table for Lennox-approved Horizontal Vent Kits and accessories.

NOTE - See drawings for additional information.

NOTE - See installation instructions for detailed venting requirements.

DIRECT DRIVE FAN(S)

- All models are equipped with efficient and quiet operating direct drive fan(s)
- LF25-125 through LF25-200 models have a single fan
- LF25-250 through LF25-400 models have two fans

CABINET

- Constructed of pre-painted steel
- Cabinet is ribbed for improved sound reduction
- Fan orifice opening is punched for improved airflow and sound performance
- Adjustable louvers are furnished on cabinet for control of air flow direction
- Wiring junction box is conveniently located outside unit cabinet for easy field wiring connections

Optional Accessories

Discharge Nozzles

- Directs discharge air from unit heater
- Available in 30°, 45°, 60° and 90° style
- Fully assembled from heavy-gauge steel
- Paint finish matches unit heater
- See Dimension Drawings

SPECIFICATIONS — LF25-125 to LF25-200

General Data	**Model No. - Stainless Steel**	**LF25-125S**	**LF25-150S**	**LF25-175S**	**LF25-200S**
	Model No. - Aluminized Steel	**LF25-125A**	**LF25-150A**	**LF25-175A**	**LF25-200A**
	Heat Input Type	**1 Stage**	**1 Stage**	**1 Stage**	**1 Stage**
Heating Performance	Input - Btuh	125,000	150,000	175,000	200,000
	Output - Btuh	103,750	124,500	145,250	166,000
	Steady State Efficiency (Natural)	83%	83%	83%	83%
	Temperature Rise - °F	50	62	58	59
Connections	Flue size - in. (round)	4	4	[1] 5	[1] 5
	Gas Piping Size - in.	1/2	1/2	1/2	1/2
Fan Data	Number of fans	1	1	1	1
	Fan Diameter - in.	16	16	18	18
	Number of blades	4	4	5	5
	Motor Output - hp	1/5	1/5	1/3	1/3
	rpm	1075	1075	1075	1075
	Air Volume - cfm	1950	1950	2350	2650
Weight Data	Net Weight - lbs. (kg)	147 (67)	157 (71)	170 (77)	180 (82)
	Shipping Weight - lbs. (kg)	167 (76)	177 (80)	190 (86)	200 (91)

ELECTRICAL DATA

Voltage	115 volts - 60 hertz - 1 phase			
Fan motor full load amps	5.0	5.0	7.0	7.0
Maximum overcurrent protection (MOCP)	15	15	15	15

OPTIONAL ACCESSORIES - ORDER SEPARATELY

Discharge Nozzle	**30°**	**18K66**	**18K66**	**18K67**	**18K67**
	45°	**18K72**	**18K72**	**18K78**	**18K78**
	60°	**18K87**	**18K87**	**18K88**	**18K88**
	90°	**18K93**	**18K93**	**18K98**	**18K98**

[1] 1-3/4 in. x 2-3/4 in. rectangular (unit) to 5 in. diameter (flue) adaptor is furnished with unit for flue connection.

SPECIFICATIONS — LF25-250 to LF25-400

General Data	**Model No. - Stainless Steel**	**LF25-250S**	**LF25-300S**	**LF25-350S**	**LF25-400S**
	Model No. - Aluminized Steel	**LF25-250A**	**LF25-300A**	**LF25-350A**	**LF25-400A**
	Heat Input Type	**2 Stage**	**2 Stage**	**2 Stage**	**2 Stage**
Heating Performance	Input Btuh — High Heat	250,000	300,000	350,000	400,000
	Input Btuh — Low Heat	162,500	195,000	225,000	254,000
	Output Btuh - Natural — 2nd Stage	207,500	246,000	290,500	328,000
	Steady State Efficiency - Natural	83%	82%	83%	82%
	Temperature Rise - °F	51	57	54	59
Connections	Flue size - in. (round)	[1] 5	[1] 5	[2] 6	[2] 6
	Gas Piping Size - in.	3/4	3/4	3/4	3/4
Fan Data	Number of fans	2	2	2	2
	Fan Diameter - in.	16	16	18	18
	Number of blades	4	4	5	5
	Motor Output - hp	(2) 1/5	(2) 1/5	(2) 1/3	(2) 1/3
	Amps (total)	3.0 (6.0)	3.0 (6.0)	3.9 (7.8)	3.9 (7.8)
	rpm	1075	1075	1075	1075
	Air Volume - cfm	4000	4000	5000	5250
Weight Data	Net Weight - lbs. (kg)	290 (132)	310 (141)	320 (145)	360 (163)
	Shipping Weight - lbs. (kg)	310 (141)	330 (197)	340 (154)	380 (172)

ELECTRICAL DATA

Voltage	115 volts - 60 hertz - 1 phase			
Fan motor full load amps	8.0	8.0	11.0	11.0
Maximum overcurrent protection (MOCP)	15	15	15	15

OPTIONAL ACCESSORIES - ORDER SEPARATELY

Discharge Nozzle	**30°**	**18K68**	**18K68**	**18K70**	**18K70**
	45°	**18K81**	**18K81**	**18K83**	**18K83**
	60°	**18K89**	**18K89**	**18K91**	**18K91**
	90°	**18K99**	**18K99**	**18L06**	**18L06**

[1] 1-3/4 in. x 2-3/4 in. rectangular (unit) to 5 in. diameter (flue) adaptor is furnished with unit for flue connection.

[2] 1-3/4 in. x 2-3/4 in. rectangular (unit) to 6 in. diameter (flue) adaptor is furnished with unit for flue connection.

OPTIONAL ACCESSORIES - GAS HEAT

NATURAL GAS TO LPG/PROPANE CONVERSION KITS

US			CANADA		
Model No.	**LF25-125- to -200**	**LF25-250 to -400**	**Model No.**	**LF25-125- to -200**	**LF25-250 to -400**
0-3000 ft.	**18L12**	**19K27**	0-4500 ft.	**18L12**	**19K27**
3001-5000 ft.	**18L12**	**19K28**	4501-7500 ft.	**18L12**	**19K28**
5001-7000 ft.	**19A51**	**19K30**	7501-9500 ft.	**19A51**	**19K30**
7001-9000 ft.	**19A51**	**19K31**			
9001-10,000 ft.	**19A52**	**19K32**			

HIGH ALTITUDE CONVERSION KITS - NATURAL GAS ONLY

US			CANADA		
Model No.	**LF25-125- to -200**	**LF25-250 to -400**	**Model No.**	**LF25-125- to -200**	**LF25-250 to -400**
4001-5000 ft.	**19A53**	Factory	6501-7500 ft.	**19A53**	Factory
5001-8000 ft.	**19A53**	**19K36**	7501-9500 ft.	**19A53**	**19K36**
8001-10,000 ft.	**19A54**	**19K44**			

HIGH ALTITUDE PRESSURE SWITCH KITS

Model No.	**LF25-125**	**LF25-150**	**LF25-175**	**LF25-200**	**LF25-250**	**LF25-300**	**LF25-350**	**LF25-400**
0-3000 ft.	Factory	Factory	Factory	Factory	Factory	Factory	Factory	Factory
3001-4000 ft.	Factory	**20J44**	Factory	Factory	Factory	Factory	Factory	Factory
4001-5000 ft.	**20J43**	**20J44**	Factory	**20J45**	Factory	Factory	Factory	Factory
5001-7000 ft.	**20J43**	**20X67**	Factory	**20J45**	**20J44**	**20X67**	Factory	**20X65**
7001-8000 ft.	**20J42**	**20X67**	**20J43**	**20X66**	**20J44**	**20X67**	**20J42**	**20X65**
8001-9000 ft.	**20J42**	**20X65**	**20X67**	**20X66**	**20X66**	**20X65**	**20J42**	**20X63**
9001-10,000 ft.	**20X64**	**20X65**	**20X67**	**20X66**	**20X66**	**20X65**	**20J42**	**20X63**

HORIZONTAL VENT KITS AND ELBOW

Unit Heater Model No.	Vent Diameter (in.)	Upslope Vent Kit Catalog No.	Downslope Catalog No.	45° Elbow Catalog No.	90° Elbow Catalog No.	[1] Minimum Vent Length (ft.)
LF25-125 LF25-150	4	**75W63**	**75W67**	**87W80 (Optional)**	**75W71 (Optional)**	5
LF25-175 LF25-200 LF25-250 LF25-300	5	**75W64**	**75W68**	**87W81 (Optional)**	**75W72 (Optional)**	5
LF25-350 LF25-400	6	**75W65**	**75W69**	**87W82 (Optional)**	**75W73 (Optional)**	5

[1] Length does not include termination (or elbow where applicable). NOTE - Elbow is required where shown to facilitate connection of horizontal vent kit to flue outlet.

STRAIGHT VENT PIPE - FOR HORIZONTAL VENTING

Unit Heater	Vent Diameter (in.)	Length (in.)	Catalog No.
LF25-125 LF25-150	4	6	**75W77**
	4	12	**75W78**
	4	36	**75W79**
LF25-175 LF25-200 LF25-250 LF25-300	5	6	**75W80**
	5	12	**75W81**
	5	36	**75W82**
LF25-350 LF25-400	6	12	**75W83**
	6	36	**75W84**

THROW DATA

Model No.	[1] Effective Throw feet
LF25-125, LF25-150	50
LF25-175, LF25-200	60
LF25-250, LF25-300	70
LF25-350, LF25-400	80

NOTE - Adjustable horizontal louvers on unit allow a variation in throw and spread.

[1] Throw terminates where velocity reaches 50 ft. per minute.

[1] RECOMMENDED MOUNTING HEIGHT

Model No.	Feet
LF25-125, LF25-150	8-16
LF25-175, LF25-200	8-20
LF25-250, LF25-300	12-26
LF25-350, LF25-400	12-28

[1] Recommended maximum mounting height from floor to bottom of unit. At heights greater than shown air throw distance and air temperature at floor level is affected.

INSTALLATION CLEARANCES

Top	6 inches	152 mm
Sides	18 inches	457 mm
Rear	18 inches	457 mm
Bottom	1 inch	25 mm
Flue	6 inches	152 mm

NOTE - Allow 24 in. (610 mm) for servicing and control box access on the control box side of the unit.

See Installation Instructions for further installation considerations.

MAXIMUM HORIZONTAL VENT LENGTHS

No. of Elbows	LF25-125, LF25-150, LF25-175, LF25-200, LF25-350, LF25-400	LF25-250, LF25-300
	Feet	Feet
1	25	35
2	20	30
3	15	25
4	10	20
5	5	15
6	- - -	10
7	- - -	5

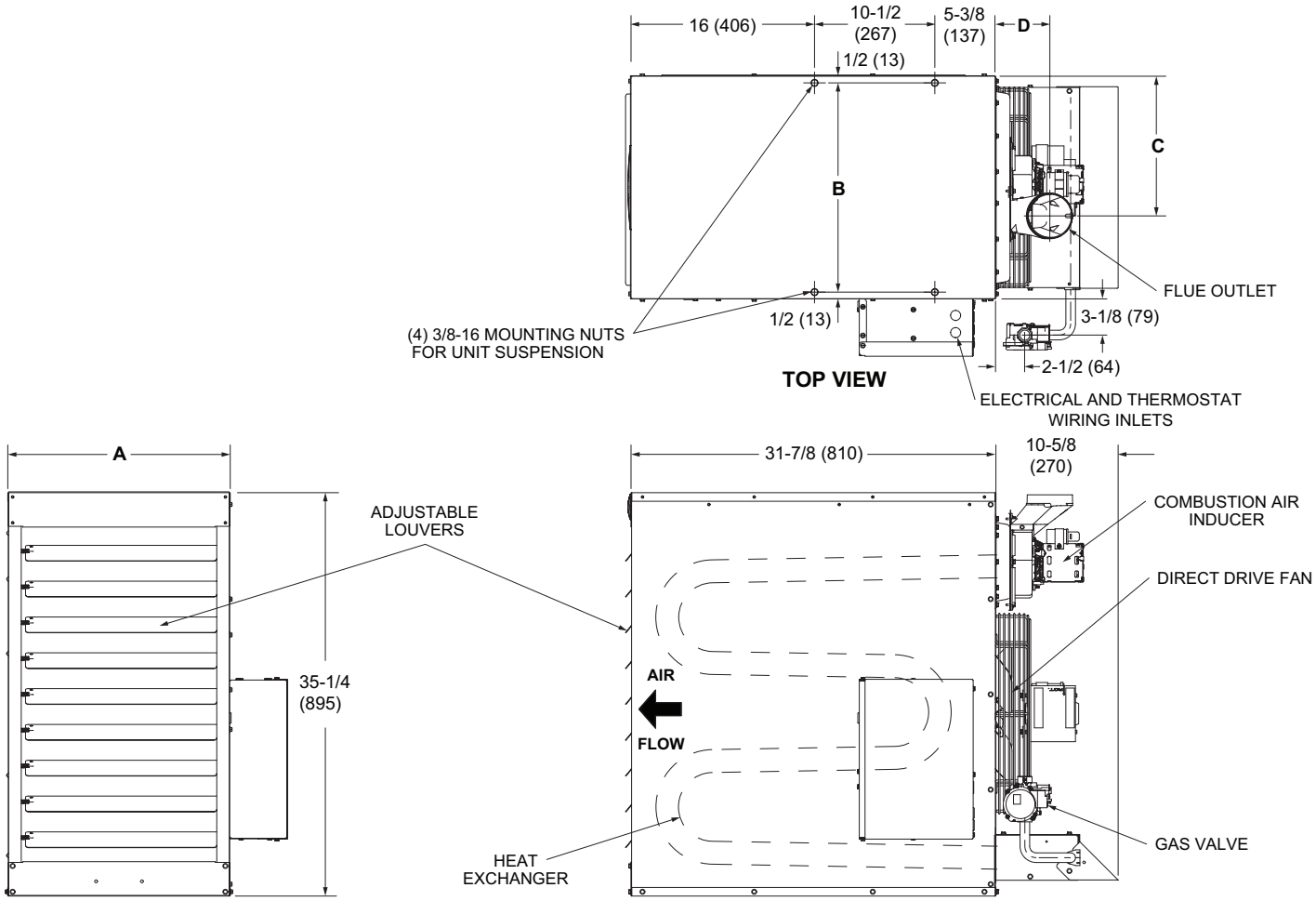

Model No.	A		B		C		D	
	in.	mm	in.	mm	in.	mm	in.	mm
LF25-125 LF25-150	19-1/2	495	18-1/2	470	12-1/4	311	4-3/4	121
LF25-175 LF25-200	25	635	23-3/4	603	9-1/2	241	3	76

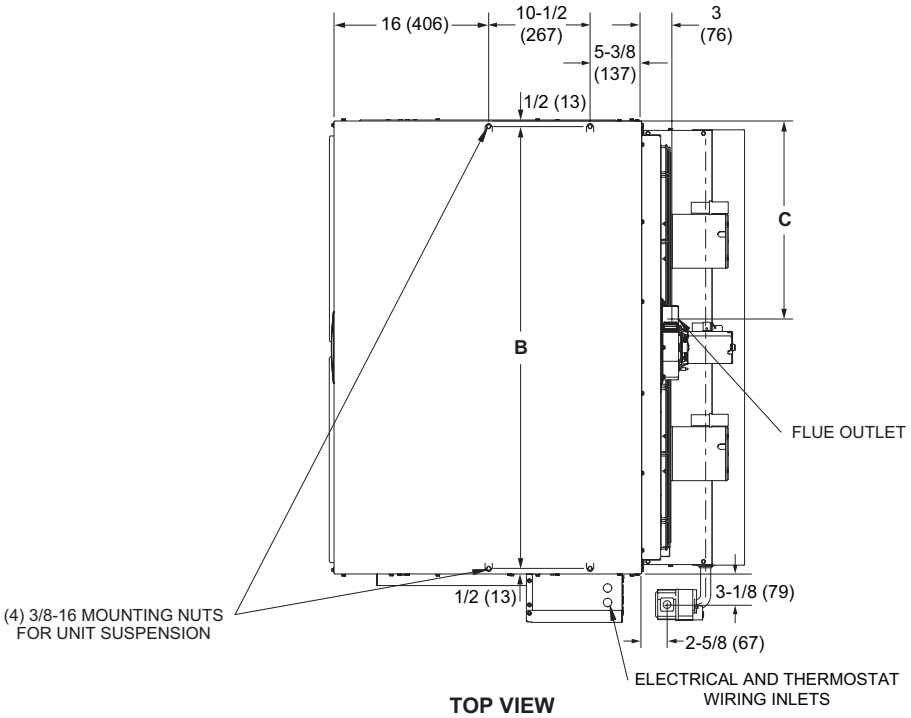

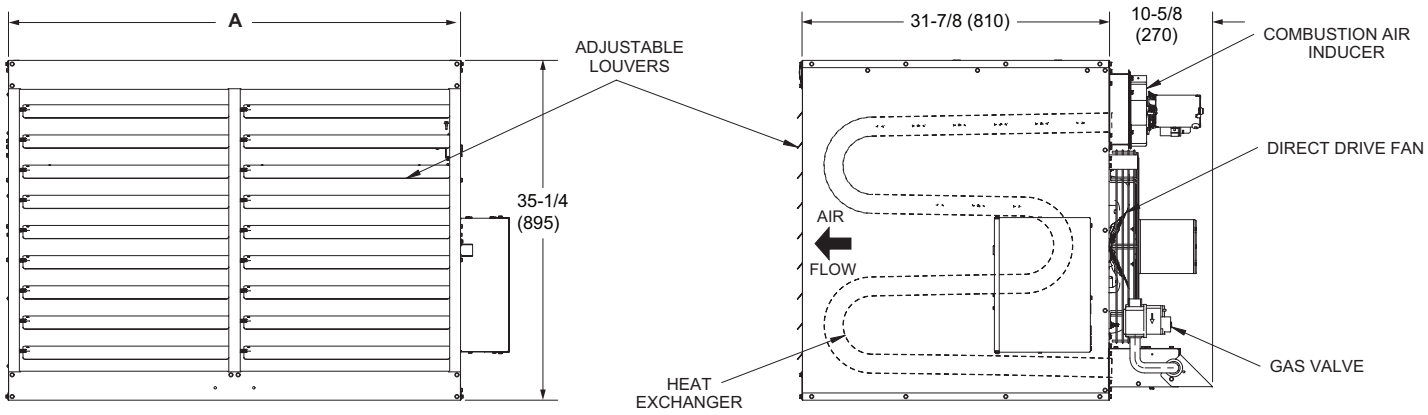

Model No.	A		B		C	
	in.	mm	in.	mm	in.	mm
LF25-250 LF25-300	37-5/8	956	36-1/2	927	15-7/8	403
LF25-350 LF25-400	47	1194	45-3/4	1162	20-1/2	521

30° Discharge Nozzle

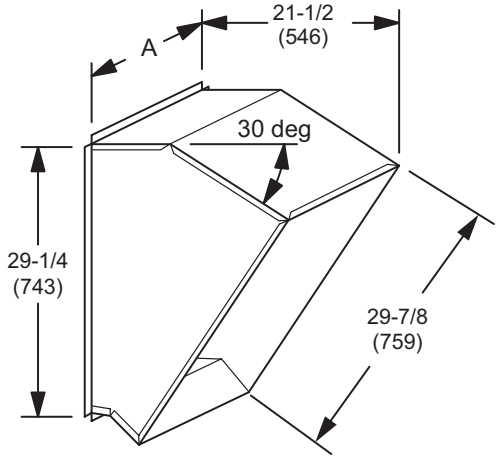

45° Discharge Nozzle

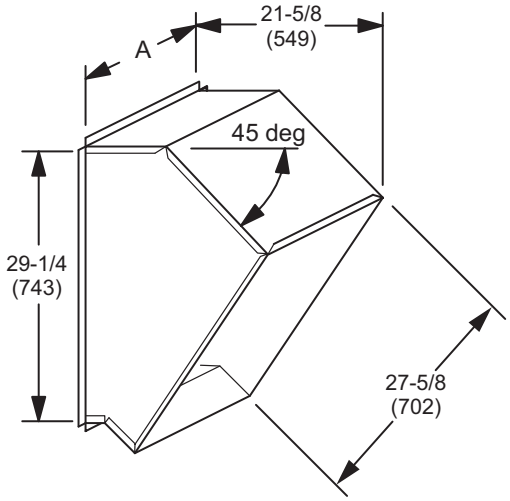

60° Discharge Nozzle

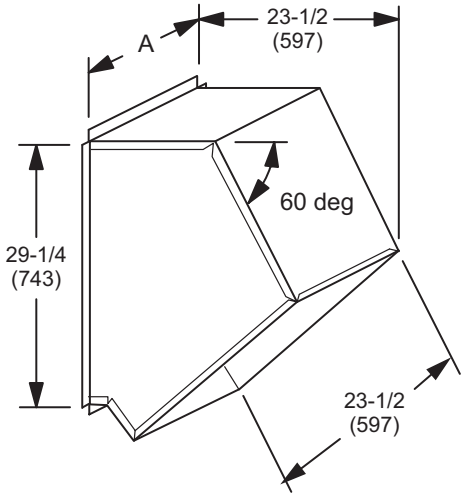

90° Discharge Nozzle

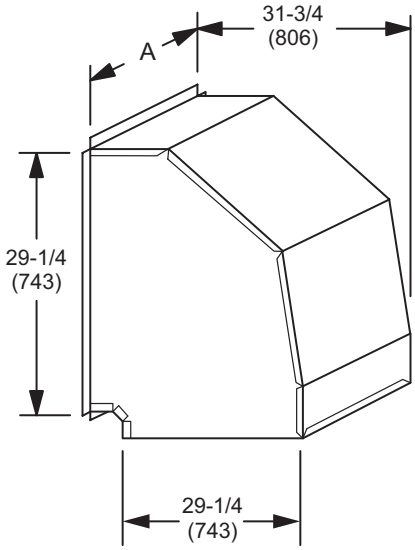

Model Usage	A	
	in.	mm
LF25-125 LF25-150	17-1/4	464
LF25-175 LF25-200	22-3/4	578
LF25-250 LF25-300	33-1/2	851
LF25-350 LF25-400	44-3/4	1137

HORIZONTAL VENT KITS (UPSLOPE)

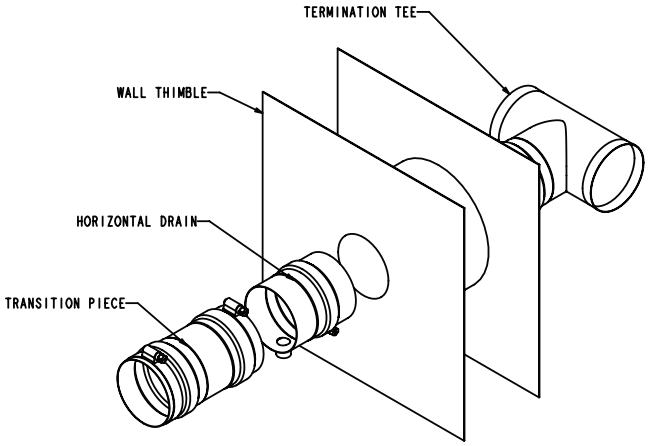

HORIZONTAL VENT KITS (DOWNSLOPE)

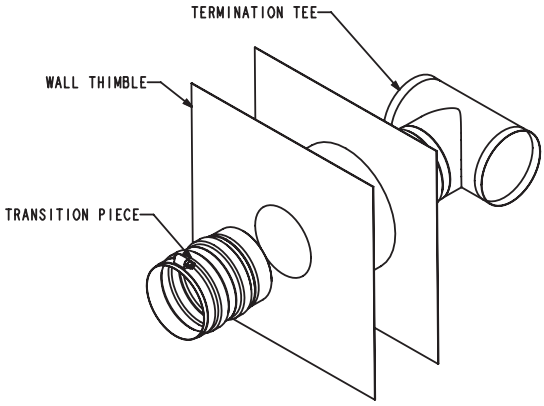

45° ELBOW (Typical)

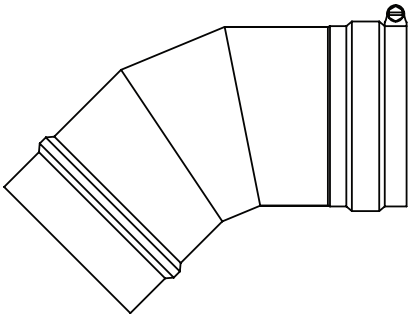

STRAIGHT PIPE (Typical)

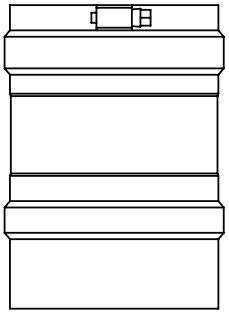

90° ELBOW (Typical)

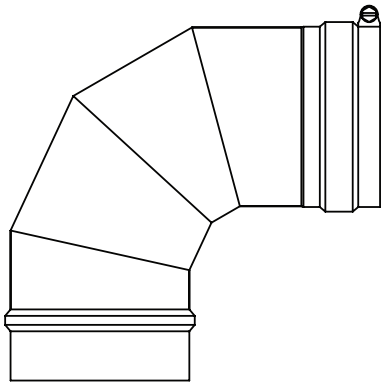

OPTIONAL CONVENTIONAL TEMPERATURE CONTROL SYSTEMS

CS7500 Commercial 7-Day Programmable Thermostat

- Premium Universal Thermostat
- Full Color Touchscreen Interface
- Up To 4 Heat / 3 Cool
- Built-In Sensors For Temperature and Humidity
- Remote Sensors Options For Temperature, Discharge Air, Outdoor Air
- 5-2 or 7-Day Scheduling
- Smooth Setback Recovery
- Heat/Cool Auto-Changeover
- FDD, ASHRAE, IECC Compliant

CS3000 Commercial 5-2 Day Programmable Thermostat

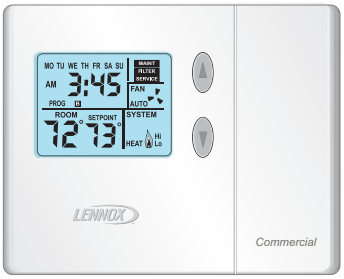

- Conventional Multi-Stage Thermostat
- Intuitive Display
- Push-Button Operation
- Up To 2 Heat / 2 Cool
- Built-In Temperature Sensor
- Remote Temperature Sensing
- Up to 5-2 Day Scheduling
- Smooth Setback Recovery
- Heat/Cool Auto-changeover

L40 Smart Wi-Fi ProgrammableThermostat

- Two-Stage Heating / One-Stage Cooling
- Universal - Gas, electric and heat pumps for single-stage heating or cooling systems (including dual-fuel operation)
- Intuitive Touchscreen Interface
- Automatic Changeover between Heating and Cooling
- Up to four separate schedules are available plus Schedule IQ™ (available in Lennox® Home App)
- One-Touch Away Mode
- Smooth Setback Recovery (SSR)
- Compressor Short-Cycle Protection
- Maintenance Reminders
- ENERGY STAR® certified - Factory preset program settings conform to EPA ENERGY STAR® recommended setpoints
- Control temperature, fan operation, set programs/ schedules and set Away mode in the Lennox® Home App
- All thermostat commissioning and settings are made in the Lennox® Smart Tech App
- Smart home automation compatible with Amazon Alexa® and Google Assistant
- Works with Control4® and Building36® integration

OPTIONAL CONVENTIONAL TEMPERATURE CONTROL SYSTEMS

Description		Catalog No.
CS7500 Commercial 7-Day Programmable Thermostat		
CS7500 7-Day Thermostat		**24K41**
Sensors/Accessories	[1] Remote non-adjustable wall-mount 20k	**47W36**
	[1] Remote non-adjustable wall-mount 10k	**47W37**
	Remote non-adjustable discharge air (duct mount)	**19L22**
	Outdoor temperature sensor	**X2658**
CS3000 5-2 Day Programmable		
CS3000 5-2 Day Thermostat		**11Y05**
Sensor/Accessories	Remote non-adjustable wall mount 10k averaging	**47W37**
	Thermostat wall mounting plate	**X2659**
L40 Smart Wi-Fi Thermostat Programmable		
L40 Smart Wi-Fi Thermostat		**27V51**
Universal Thermostat Guard with Lock (clear)		
	Inside Dimensions (H x W) 5 7/8 x 8 3/8 in.	**39P21**

[1] Remote wall-mount sensors can be applied in any of the following combinations:
One Sensor - (1) 47W36, Two Sensors - (2) 47W37, Three Sensors - (2) 47W36 and (1) 47W37
Four Sensors - (4) 47W36, Five Sensors - (3) 47W36 and (2) 47W37

REVISIONS

Sections	Description of Change
Optional Accessories	Removed LED Diagnostic Light Kit.

Visit us at www.lennox.com
For the latest technical information, www.lennoxcommercial.com
Contact us at 1-800-4-LENNOX

NOTE - Due to Lennox' ongoing commitment to quality, Specifications, Ratings and Dimensions subject to change without notice and without incurring liability.
Improper installation, adjustment, alteration, service or maintenance can cause property damage or personal injury.
Installation and service must be performed by a qualified installer and servicing agency.

©2025 Lennox Industries, Inc.