LF25-30-105

COMPACT UNIT HEATERS

Low Profile | Horizontal Discharge | 60Hz

RESIDENTIAL / COMMERCIAL
PRODUCT SPECIFICATIONS (EHB)

Steady-State Efficiency - up to 83.8%
Input - 30,000 to 105,000 Btuh

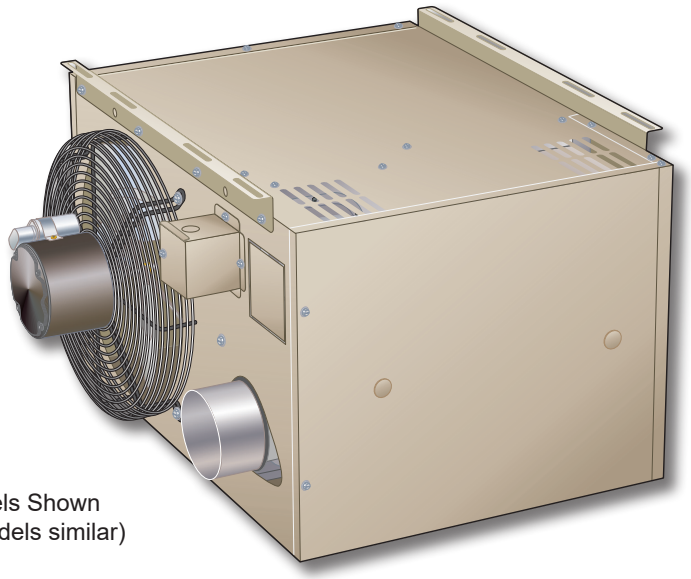

LF25-30-45 Models Shown
(LF25-60-105 models similar)

MODEL NUMBER IDENTIFICATION

LF 25 - 45 A - 1

Unit Type
LF = Lennox Unit Heater

Series

Nominal Gas Heat Input
30 = 30,000 Btuh
45 = 45,000 Btuh
60 = 60,000 Btuh
75 = 75,000 Btuh
90 = 90,000 Btuh
105 = 105,000 Btuh

Minor Design Sequence
1 = 1st Generation
2 = 2nd Generation

Heat Exchanger Type
A = Aluminized Steel

CONTENTS

Approvals And Warranty 1
Dimensions - Unit 6
Electrical Data 4
Features And Benefits 2
Installation Clearances 5
Maximum Horizontal Vent Lengths 5
Model Number Identification. 1
Optional Accessories - Gas Heat 4
Optional Conventional Temperature Control Systems. .8
Specifications 4
Vent Kits And Accessory Drawings 7

APPROVALS AND WARRANTY

WARRANTY

- Heat Exchanger - Aluminized steel - ten year limited
- All other covered components:
  - Five year limited - Residential installations
  - One year limited - Non-residential installations
- Refer to Lennox Equipment Limited Warranty certificate included with unit for specific details

APPROVALS

- CSA International certified
- Certified for natural or LPG/Propane gas
- Units are approved for vertical or horizontal venting

Form Number 210892 | September 2025
Supersedes all previous versions

FEATURE HIGHLIGHTS

1. Heavy Gauge Steel Cabinet
2. Tubular Heat Exchanger
3. Inshot Burners
4. Gas Control Valve
5. Combustion Air Inducer
6. Combination Ignition/Fan Timer Control
7. Direct Drive fan

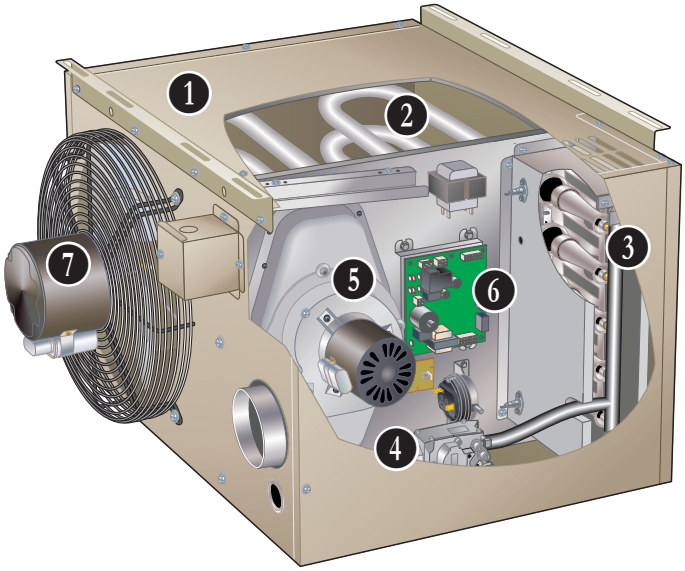

FEATURES AND BENEFITS

APPLICATIONS

- Horizontal unit heaters are low profile, compact in design and easy to install
- Steady State Efficiencies - Up to 83.8%
- Ideal for economical heating systems in garages and non-confined living spaces
- Shipped completely assembled with controls factory installed and wired
- Hanging brackets are shipped loose for field installation
- Test operated at the factory to ensure proper operation and dependability

NOTE - Installer must locate unit, make unit gas supply, flue, electrical connections and mount thermostat to complete job.

1 CABINET

- Constructed of pre-painted heavy gauge cold rolled steel
- Hinged, reversible door for easy access
- Adjustable louvers are furnished on cabinet for control of air flow direction
- Wiring junction box is conveniently located outside unit cabinet for easy field wiring connections
- Hanging brackets for suspending unit are furnished for field installation
- Unit may be rotated 180 degrees (top for bottom) for ease of installation of gas, electrical and flue locations

HEATING SYSTEM

2 Tubular Aluminized Steel Heat Exchanger

- Tubular heat exchanger is constructed of aluminized steel for superior resistance to corrosion and oxidation
- Curving design of heat exchanger allows complete exposure of heating surfaces to supply air stream
- Dimpled tubes with wrinkle bends allow for maximum heat transfer
- Compact design reduces space requirements in unit cabinet
- Heat exchanger has been laboratory life cycle tested

3 Inshot Burner Assembly

- Aluminized steel inshot burners provide efficient trouble free operation
- Burner venturi mixes air and gas in correct proportion for proper combustion
- Burner assembly is removable from the unit as a single component for ease of service

4 Gas Control Valve

- 24 volt redundant combination gas control valve combines manual shut off switch (On-Off), automatic electric valve (dual) and gas pressure regulation into a compact combination control

5 Combustion Air Inducer

- Prepurges heat exchanger and safely vents combustion products
- Operates only during heating cycle
- Blower motor has ball bearings and is thermally protected

Pressure Switch

- Pressure switch prevents unit operation in case of blocked flue outlet

Limit Control(s)

- Factory installed and accurately located
- Limit control has fixed temperature setting and protects heating system from abnormal operating conditions

Flame Rollout Switch

- Automatic reset switch is factory installed on the top of the burner box

HEATING SYSTEM (continued)

Optional Accessories

Natural Gas to LPG/Propane Conversion Kit
- Required for field changeover from natural gas to LPG/ Propane

NOTE - See Optional Accessories - Gas Heat for proper kit selection at different elevations.

High Altitude Conversion Kit - Natural Gas
- Required on all units for proper unit operation at altitudes from 5001 to 10,000 ft. (US) and 7501 to 10,000 ft. (Canada)

High Altitude Pressure Switch Kit
- Required for proper unit operation at various elevations

CONTROLS

6 Combination Direct Spark Ignition/Fan Timer Control
- Electronic direct spark ignition control provides positive and safe main burner ignition
- Spark is intermittent and occurs only when required
- Separate electronic flame sensor control assures safe and reliable operation
- Should loss of flame occur, flame sensor controls will initiate 5 attempts at re-ignition before locking out unit operation
- Control board contains all necessary controls and relays to operate unit
- Includes: Fan timer control - fan on 30 seconds (fixed), fan off 150 seconds (fixed), terminal strip plug for thermostat connections, diagnostic LED for troubleshooting
- Direct plug-in wiring harness

Transformer
- 120V/24V transformer furnished as standard

Optional Accessories

Thermostats
- For thermostat options, see Optional Conventional Temperature Control Systems on Page 8

VENTING

- Units may be vented horizontally or vertically
  - Residential Vertical Venting - Units are approved for installation when vented in compliance with the latest edition of the National Fuel Gas Code (NFPA 54 / ANSI Z223.1) in the USA and with CSA-B149.1 codes in Canada
  - Residential Horizontal Venting - Units are approved for residential installation only with UL listed, Cat III stainless steel vent kits
  - Commercial Vertical Venting - Units are approved for installation with single wall metal vent pipe
  - Commercial Horizontal Venting - Units are approved for single-wall metal vent pipe or optional UL listed, Cat III stainless steel vent kits

NOTE - See installation instructions for detailed venting requirements.

Optional Accessories

Horizontal Vent Kits
- UL listed, Cat III stainless steel vent kits are required for horizontal venting
- Available for upward or downward slope
- Vent kits snap together
- Kits include unit transition, vent termination and wall thimble
- Upward slope vent kits have a drain connection
- Provisions for hanging must be field supplied
- Optional 45° or 90° elbow available for ease of vent connection
- Straight pipe sections in various lengths are available

NOTE - See Horizontal Vent Kits / Elbow table for Horizontal Vent Kits and accessories on Page 5.

NOTE - See drawings for additional information.

Vent Adaptor Kits
- Mounting Plate Kit - Required for 4 inch to 3 inch vent pipe applications
- Vent Adaptor Kits (Upslope and Downslope) for 4 inch unit flue pipe to 3 inch Category III vent pipe

DIRECT DRIVE FAN

- Efficient and quiet operating direct drive propeller type fan
- Permanently lubricated fan motor

SPECIFICATIONS

	Model No.	LF25-30A	LF25-45A	LF25-60A	LF25-75A	LF25-90A	LF25-105A
Gas Heating Performance	Heating Capacity Input Btuh	30,000	45,000	60,000	75,000	90,000	105,000
	Heating Capacity Output Btuh - Natural	25,020	37,665	50,220	62,550	75,420	87,675
	Steady State Efficiency - Natural	83.4%	83.7%	83.7%	83.4%	83.8%	83.5%
	Temperature rise - °F	37	52	47	56	43	54
Connections in.	Flue size (round)	4	4	4	4	4	4
	Gas Piping Size - in.	1/2	1/2	1/2	1/2	1/2	1/2
Fan Data	Number of fans	1	1	1	1	1	1
	Fan Diameter - in.	10	10	14	14	16	16
	Number of blades	4	4	4	4	4	4
	Motor Output - hp	1/25	1/25	1/15	1/15	1/10	1/10
	rpm	1550	1550	1075	1075	1075	1075
	Air Volume - cfm	625	665	1000	1050	1600	1500
	Air throw at 8 ft. mounting height - ft.	27	29	34	41	46	43
Weight Data	Net Weight - lbs. (kg)	55 (25)	60 (27)	85 (39)	90 (41)	115 (52)	120 (54)
	Shipping Weight - lbs. (kg)	60 (27)	65 (29)	90 (41)	95 (43)	120 (54)	125 (57)

ELECTRICAL DATA

Voltage	115 volts - 60 hertz - 1 phase					
Fan motor full load amps	2.0	2.0	2.0	2.0	3.0	3.0
Maximum overcurrent protection (MOCP)	15	15	15	15	15	15

OPTIONAL ACCESSORIES - GAS HEAT

NATURAL GAS TO LPG/PROPANE CONVERSION KITS

US		CANADA	
0 - 5000 ft.	**18L11**	0 - 7500 ft.	**18L11**
5001- 8000 ft.	**19A10**	7501- 9500 ft.	**19A12**
8001 - 10,000 ft.	**19A11**		

HIGH ALTITUDE CONVERSION KITS - NATURAL GAS

US		CANADA	
5001 - 7000 ft.	**19A17**	7501 - 9500 ft.	**19A17**
7001 - 10,000 ft.	**19A18**		

HIGH ALTITUDE PRESSURE SWITCH KITS

Model No.	LF25-30A	LF25-45A	LF25-60A	LF25-75A	Model No.	LF25-90A	LF25-105A
0-3000 ft.	Factory	Factory	Factory	Factory	0-2000 ft.	Factory	Factory
3000-5000 ft.	Factory	Factory	Factory	**22K44**	2001-4000 ft.	**22K44**	Factory
5001-6000 ft.	Factory	Factory	**22L26**	**22K44**	4001-6000 ft.	**22L26**	**22K44**
6001-9000 ft.	**22L27**	**22L27**	**22L26**	**22L27**	6001-7000 ft.	**22L27**	**22K44**
9001-10,000 ft.	**22L27**	**22L27**	**22L28**	**22L27**	7001-10,000 ft.	**22L27**	**22L27**

HORIZONTAL VENT KITS AND ELBOWS

REQUIRED FOR RESIDENTIAL HORIZONTAL VENTING APPLICATIONS

Unit Heater Model No.	Vent Diameter (in.)	Upslope Vent Kit Catalog No.	Downslope Vent Kit Catalog No.	45° Elbow Catalog No.	90° Elbow Catalog No.	[1] Minimum Vent Length (ft.)
LF25-30A, LF25-45A LF25-60A, LF25-75A LF25-90A, LF25-105A	4	**75W63**	**75W67**	**87W80 (Optional)**	**75W71 (Optional)**	5

[1] Length does not include termination (or elbow if used).

STRAIGHT VENT PIPE - FOR HORIZONTAL VENTING

Unit Heater	Vent Diameter (in.)	Length (in.)	Catalog No.
LF25-30A, LF25-45A LF25-60A, LF25-75A LF25-90A, LF25-105A	4	6	**75W77**
	4	12	**75W78**
	4	36	**75W79**

VENT ADAPTOR KITS (FOR RETRO-FIT INSTALLATIONS)

Unit Heater	Description	Catalog No.
LF25-45A	Combustion Air Inducer Mounting Plate Kit (required for 4 inch to 3 inch vent pipe applications)	**19U97**
LF25-30A LF25-45A	Vent Adaptor Kit (Upslope) - 4 inch unit flue pipe to 3 inch Category III vent pipe	**19V95**
	Vent Adaptor Kit (Downslope) - 4 inch unit flue pipe to 3 inch Category III vent pipe	**19V96**

INSTALLATION CLEARANCES

	in.	mm
Top	1	25
Side opposite control box/access panel	1	25
Control Box/Access Panel Side	24	610
Back	18	457
Bottom	1	1
[1] Flue	6	152

See Installation Instructions for further installation considerations.

[1] Single-Wall vent clearance. Type B Double-Wall vent clearance is in accordance with the manufacturer's listing.

MAXIMUM MOUNTING HEIGHT

LF25-30-45-60-75	10 ft.	3 m
LF25-90-105	12 ft.	3.7 m

MAXIMUM HORIZONTAL VENT LENGTHS

No. of Elbows	Maximum Length (feet) of Straight Vent Pipe
1	25
2	20
3	15
4	10
5	5

NOTES - Minimum horizontal vent length is 5 ft.
Horizontal venting requires the use of a UL listed, Cat III Horizontal Vent Kit and Vent Pipe.
Horizontal venting must terminate in a tee.
Maximum total length of vent pipe must not exceed 30 ft.
One elbow is equivalent to 5 ft. of vent pipe.
Residential Vertical Venting - Units are approved for installation when vented in compliance with the latest edition of the National Fuel Gas Code (NFPA 54 / ANSI Z223.1) in the USA and with CSA-B149.1 codes in Canada
Residential Horizontal Venting - Units are approved for residential installation only with UL listed, Cat III stainless steel vent kits
Commercial Vertical Venting - Units are approved for installation with single wall metal vent pipe
Commercial Horizontal Venting - Units are approved for single-wall metal vent pipe or optional UL listed, Cat III stainless steel vent kits

DIMENSIONS - UNIT

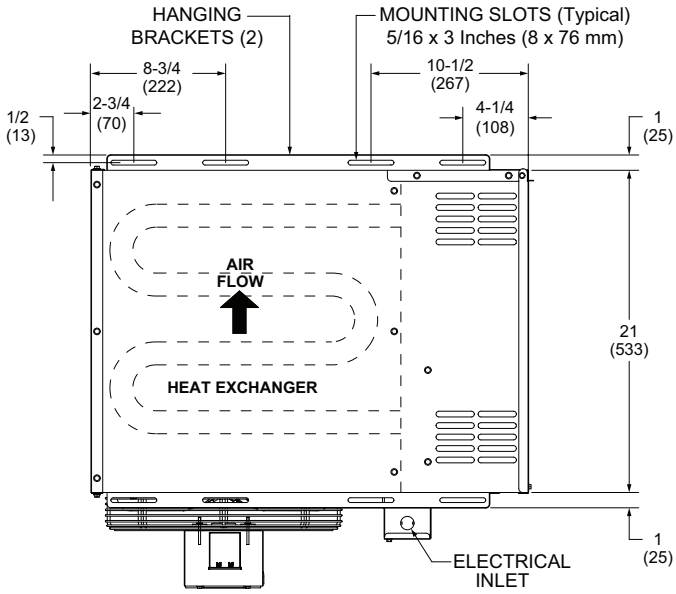

TOP VIEW

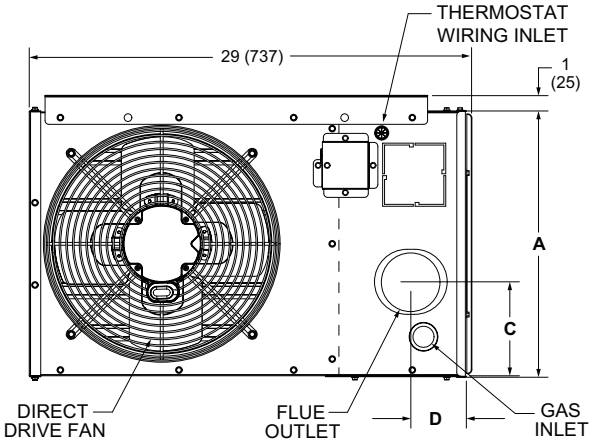

BACK VIEW

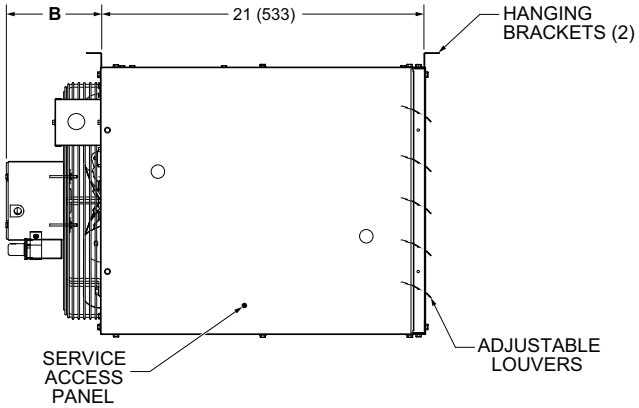

SIDE VIEW

Model No.	A		B		C		D	
	in.	mm	in.	mm	in.	mm	in.	mm
LF25-30A LF25-45A	12-3/8	314	6-1/2	165	4	102	6	152
LF25-60A LF25-75A	17-1/2	445	6-1/4	159	6-1/8	156	3-5/8	92
LF25-90A LF25-105A	23	584	7-7/8	200	9-1/8	232	3-5/8	92

VENT KITS AND ACCESSORY DRAWINGS

HORIZONTAL VENT KITS (UPSLOPE)

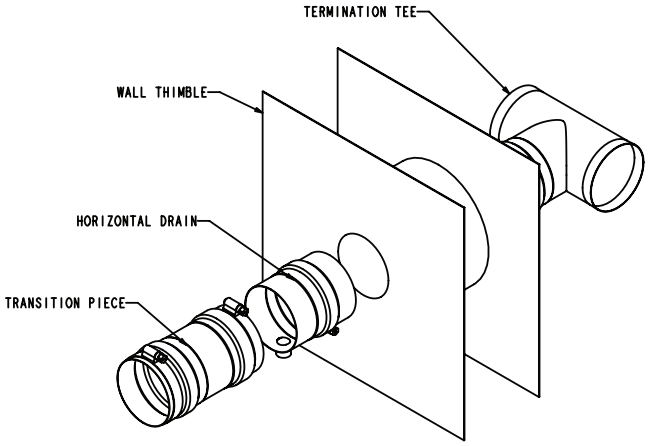

HORIZONTAL VENT KITS (DOWNSLOPE)

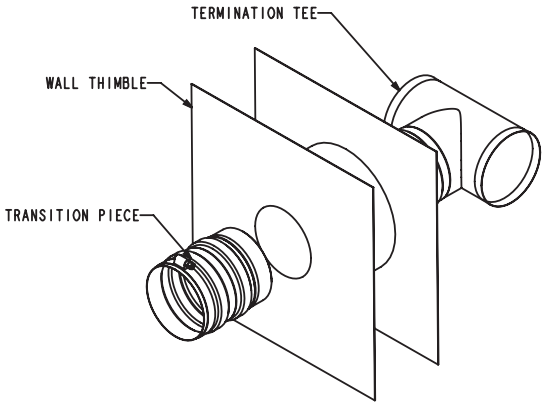

45° ELBOW (Typical)

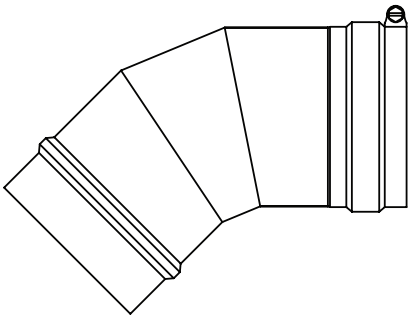

STRAIGHT PIPE (Typical)

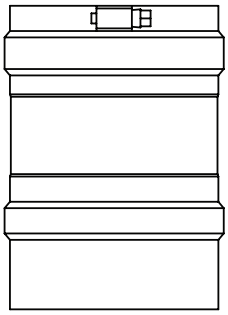

90° ELBOW (Typical)

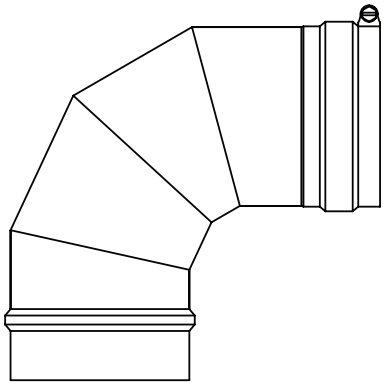

OPTIONAL CONVENTIONAL TEMPERATURE CONTROL SYSTEMS

CS7500 Commercial 7-Day Programmable Thermostat

- Premium Universal Thermostat
- Full Color Touchscreen Interface
- Up To 4 Heat / 3 Cool
- Built-In Sensors For Temperature and Humidity
- Remote Sensors Options For Temperature, Discharge Air, Outdoor Air
- 5-2 or 7-Day Scheduling
- Smooth Setback Recovery
- Heat/Cool Auto-Changeover
- FDD, ASHRAE, IECC Compliant

CS3000 Commercial 5-2 Day Programmable Thermostat

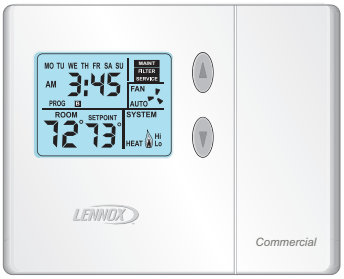

- Conventional Multi-Stage Thermostat
- Intuitive Display
- Push-Button Operation
- Up To 2 Heat / 2 Cool
- Built-In Temperature Sensor
- Remote Temperature Sensing
- Up to 5-2 Day Scheduling
- Smooth Setback Recovery
- Heat/Cool Auto-changeover

L40 Smart Wi-Fi ProgrammableThermostat

- Two-Stage Heating / One-Stage Cooling
- Universal - Gas, electric and heat pumps for single-stage heating or cooling systems (including dual-fuel operation)
- Intuitive Touchscreen Interface
- Automatic Changeover between Heating and Cooling
- Up to four separate schedules are available plus Schedule IQ™ (available in Lennox® Home App)
- One-Touch Away Mode
- Smooth Setback Recovery (SSR)
- Compressor Short-Cycle Protection
- Maintenance Reminders
- ENERGY STAR® certified - Factory preset program settings conform to EPA ENERGY STAR® recommended setpoints
- Control temperature, fan operation, set programs/ schedules and set Away mode in the Lennox® Home App
- All thermostat commissioning and settings are made in the Lennox® Smart Tech App
- Smart home automation compatible with Amazon Alexa® and Google Assistant
- Works with Control4® and Building36® integration

OPTIONAL CONVENTIONAL TEMPERATURE CONTROL SYSTEMS

Description		Catalog No.
CS7500 Commercial 7-Day Programmable Thermostat		
CS7500 7-Day Thermostat		**24K41**
Sensors/Accessories	[1] Remote non-adjustable wall-mount 20k	**47W36**
	[1] Remote non-adjustable wall-mount 10k	**47W37**
	Remote non-adjustable discharge air (duct mount)	**19L22**
	Outdoor temperature sensor	**X2658**
CS3000 5-2 Day Programmable		
CS3000 5-2 Day Thermostat		**11Y05**
Sensor/Accessories	Remote non-adjustable wall mount 10k averaging	**47W37**
	Thermostat wall mounting plate	**X2659**
L40 Smart Wi-Fi Thermostat Programmable		
L40 Smart Wi-Fi Thermostat		**27V51**
Universal Thermostat Guard with Lock (clear)		
	Inside Dimensions (H x W) 5 7/8 x 8 3/8 in.	**39P21**

[1] Remote wall-mount sensors can be applied in any of the following combinations:
One Sensor - (1) 47W36, Two Sensors - (2) 47W37, Three Sensors - (2) 47W36 and (1) 47W37
Four Sensors - (4) 47W36, Five Sensors - (3) 47W36 and (2) 47W37

REVISIONS

Sections	Description of Change
Optional Accessories	Removed LED Diagnostic Light Kit.

Visit us at www.Lennox.com
For the latest technical information, www.LennoxCommercial.com
Contact us at 1-800-4-LENNOX

NOTE - Due to Lennox' ongoing commitment to quality, Specifications, Ratings and Dimensions subject to change without notice and without incurring liability.
Improper installation, adjustment, alteration, service or maintenance can cause property damage or personal injury.
Installation and service must be performed by a qualified installer and servicing agency.

©2025 Lennox Industries, Inc.