ML16KP2 (R-454B) SERIES OUTDOOR UNITS

⚠ WARNING

Improper installation, adjustment, alteration, service or maintenance can cause property damage, personal injury or loss of life. Installation and service must be performed by a licensed professional HVAC installer or equivalent, service agency, or the gas supplier.

⚠ IMPORTANT

This unit must be matched with an indoor coil as specified with AHRI. For AHRI Certified system matchups and expanded ratings, visit www.LennoxPros.com. Coils previously charged with HCFC-22 must be flushed.

⚠ CAUTION

As with any mechanical equipment, contact with sharp sheet metal edges can result in personal injury. Take care while handling this equipment and wear gloves and protective clothing.

⚠ WARNING

To prevent serious injury or death:

1. Lock-out/tag-out before performing maintenance.
2. If system power is required (e.g., smoke detector maintenance), disable power to blower, remove fan belt where applicable, and ensure all controllers and thermostats are set to the “OFF” position before performing maintenance.
3. Always keep hands, hair, clothing, jewelry, tools, etc. away from moving parts.

⚠ CAUTION

Servicing shall be performed only as recommended by the manufacturer.

Table of Contents

Installation Clearances 7
Model Number Identification 8
Dimensions 9
Specifications 10
Typical Unit Parts Arrangement 11
Operating Gauge Set and Service Valves 12
Unit Placement 14
Removing and Installing Louvered Panels 15
New or Replacement Line Set 16
Brazing Connections 18
Flushing Line Set and Indoor Coil 21
Installing Indoor Metering Device 22
Leak Test Line Set and Indoor Coil 23
Evacuating Line Set and Indoor Coil 24
Electrical 25
System Operation 26
Charging 27
System Configuration 27
Defrost System 30
Maintenance 33
Wiring and Sequence of Operation 35
Servicing Units Void of Charge 39
Start-Up 39
Decommissioning 40

General Information

These instructions are intended as a general guide and do not supersede national or local codes in any way. Consult authorities having jurisdiction before installation.

The Merit® ML16KP2 model is designed for use with R-454B refrigerant only. This unit must be installed with an approved indoor air handler or coil. For AHRI Certified system matchups and expanded ratings, visit www.LennoxPros.com.

This outdoor unit is designed for use in systems that use the following refrigerant metering device:

- Check thermal expansion valve (CTXV)

IMPORTANT: Special procedures are required for cleaning the all-aluminum coil in this unit. See page 30 in this instruction for information.

***NOTE** – This unit ML16KP2 is a PARTIAL UNIT AIR CONDITIONER, complying with PARTIAL UNIT requirements of this Standard, and must only be connected to other units that have been confirmed as complying to corresponding PARTIAL UNIT requirements of this Standard, UL 60335-2-40/CSA C22.2 No. 60335-2-40, or UL 1995/CSA C22.2 No 236.*

⚠ WARNING

- Do not use means to accelerate the defrosting process or to clean, other than those recommended by the manufacturer.
- The appliance shall be stored in a room without continuously operating ignition sources (for example: open flames, an operating gas appliance, or an operating electric heater).
- Do not pierce or burn.
- Be aware that refrigerants may not contain an odor.

⚠ WARNING

Ducts connected to an appliance shall not contain a potential ignition source

⚠ WARNING

Every working procedure that affects safety means shall only be carried out by competent persons. This appliance is not to be used by persons (including children) with reduced physical, sensory or mental capabilities, or lack of experience and knowledge, unless they have been given supervision or instruction concerning use of the appliance by a person responsible for their safety. Children should be supervised to ensure they do not play with the appliance.

⚠ IMPORTANT

Ensure that the area is in the open or that it is adequately ventilated before breaking into the system or conducting any hot work. A degree of ventilation shall continue during the period that the work is carried out.

⚠ IMPORTANT

Verify cabling will not be subject to wear, corrosion, excessive pressure, vibration, sharp edges or any other adverse environmental effects.

⚠ IMPORTANT

Pipe work, including piping material, pipe routing, and installation shall include protection from physical damage in operation and service, and be in compliance with national and local codes and standards, such as ASHRAE 15, ASHRAE 15.2, IAPMO Uniform Mechanical Code, ICC International Mechanical Code, or CSA B52. All field joints shall be accessible for inspection prior to being covered or enclosed.

⚠ CAUTION

Under no circumstances shall potential sources of ignition be used in the searching for or detection of refrigerant leaks. A halide torch (or any other detector using a naked flame) shall not be used.

The following leak detection methods are deemed acceptable for all refrigerant systems:

Electronic leak detectors may be used to detect refrigerant leaks but, in the case of flammable refrigerants, the sensitivity may not be adequate, or may need re-calibration. (Detection equipment shall be calibrated in a refrigerant-free area.) Ensure that the detector is not a potential source of ignition and is suitable for the refrigerant used. Leak detection equipment shall be set at a percentage of the LFL of the refrigerant and shall be calibrated to the refrigerant employed, and the appropriate percentage of gas (25 % maximum) is confirmed. Leak detection fluids are also suitable for use with most refrigerants but the use of detergents containing chlorine shall be avoided as the chlorine may react with the refrigerant and corrode the copper pipe-work. If a leak is suspected, all naked flames shall be removed/extinguished. If a leakage of refrigerant is found which requires brazing, all of the refrigerant shall be recovered from the system, or isolated (by means of shut off valves) in a part of the system remote from the leak.

⚠ WARNING

Auxiliary devices which may be a potential ignition source shall not be installed in the duct work. Examples of such potential ignition sources are hot surfaces with a temperature exceeding 700°C and electric switching devices.

⚠ WARNING

For appliances using A2L refrigerants connected via an air duct system to one or more rooms, only auxiliary devices approved by the appliance manufacturer or declared suitable with the refrigerant shall be installed in connecting ductwork.

⚠ WARNING

For duct connected appliances, false ceilings or drop ceilings may be used as a return air plenum if a REFRIGERANT DETECTION SYSTEM is provided in the appliance and any external connections are also provided with a sensor immediately below the return air plenum duct joint.

⚠ CAUTION

Repair and maintenance to electrical components shall include initial safety checks and component inspection procedures such as that capacitors are discharged in a safe manner to avoid possibility of sparking, that no live electrical components and wiring are exposed while charging, recovering, or purging the system, and that there is continuity of earth bonding. If a fault exists that could compromise safety, then no electrical supply shall be connected to the circuit until it is satisfactorily dealt with. If the fault cannot be corrected immediately but it is necessary to continue operation, an adequate temporary solution shall be used that is reported to the owner of the equipment, so all parties are advised.

⚠ IMPORTANT

Work shall be undertaken under a controlled procedure so as to minimize the risk of a flammable gas or vapor being present while the work is being performed.

***NOTE** – All maintenance staff and others working in the local area shall be instructed on the nature of work being carried out with work in confined spaces being avoided.*

⚠ IMPORTANT

The area shall be checked with an appropriate refrigerant detector prior to and during work, to ensure the technician is aware of potentially toxic or flammable atmospheres. Ensure that the leak detection equipment being used is suitable for use with all applicable refrigerants, i. e. non-sparking, adequately sealed or intrinsically safe.

⚠ IMPORTANT

If any hot work is to be conducted on the refrigerating equipment or any associated parts, the appropriate fire extinguishing equipment shall be available to hand. Have a dry powder or CO2 fire extinguisher adjacent to the charging area.

⚠ CAUTION

No person carrying out work in relation to a refrigerating system which involves exposing any pipe work shall use any sources of ignition in such a manner that it may lead to the risk of fire or explosion. All possible ignition sources, including cigarette smoking, should be kept sufficiently far away from the site of installation, repairing, removing and disposal, during which refrigerant can possibly be released to the surrounding space. Prior to work taking place, the area around the equipment is to be surveyed to make sure that there are no flammable hazards or ignition risks. “No Smoking” signs shall be displayed.

⚠ IMPORTANT

Where electrical components are being changed, they shall be fit for the purpose and to the correct specification. At all times the manufacturer’s maintenance and service guidelines shall be followed. If in doubt, consult the manufacturer’s technical department for assistance. The following checks shall be applied to installations using FLAMMABLE REFRIGERANTS as applicable:

1. The actual refrigerant charge is in accordance with the room size within which the refrigerant containing parts are installed.
2. The ventilation machinery and outlets are operating adequately and are not obstructed.
3. If an indirect refrigerating circuit is being used, the secondary circuit shall be checked for the presence of refrigerant.
4. Markings on the equipment should be visible and legible. Markings and signs that are illegible shall be corrected.
5. Refrigerating pipe or components are installed in a position where they are unlikely to be exposed to any substance which may corrode refrigerant containing components, unless the components are constructed of materials which are inherently resistant to being corroded or are suitably protected against being so corroded.

⚠ CAUTION

Sealed electrical components shall be replaced, not repaired.

⚠ CAUTION

Intrinsically safe components must be replaced, not repaired

⚠ CAUTION

Some soaps used for leak detection are corrosive to certain metals. Carefully rinse piping thoroughly after leak test has been completed. Do not use matches, candles, flame or other sources of ignition to check for gas leaks.

⚠ WARNING

PARTIAL UNITS shall only be connected to an appliance suitable for the same refrigerant.

⚠ IMPORTANT

When breaking into the refrigerant circuit to make repairs – or for any other purpose – conventional procedures shall be used. However, for flammable refrigerants it is important that best practice be followed and, since flammability is a consideration, procedures such as safely remove refrigerant following local and national regulations, purging the circuit with inert gas, evacuating (optional for A2L), purging with inert gas (optional for A2L), or opening the circuit by cutting or brazing be adhered to. The refrigerant charge shall be recovered into the correct recovery cylinders if venting is not allowed by local and national codes. For appliances containing flammable refrigerants, the system shall be purged with oxygen-free nitrogen to render the appliance safe for flammable refrigerants.

This process might need to be repeated several times. Compressed air or oxygen shall not be used for purging refrigerant systems. For appliances containing flammable refrigerants, refrigerants purging shall be achieved by breaking the vacuum in the system with oxygen-free nitrogen and continuing to fill until the working pressure is achieved, then venting to atmosphere, and finally pulling down to a vacuum (optional for A2L). This process shall be repeated until no refrigerant is within the system (optional for A2L). When the final oxygen-free nitrogen charge is used, the system shall be vented down to atmospheric pressure to enable work to take place. Ensure that the outlet for the vacuum pump is not close to any potential ignition sources and that ventilation is available.

⚠ IMPORTANT

In addition to conventional charging procedures, the following requirements shall be followed.

- Ensure that contamination of different refrigerants does not occur when using charging equipment. Hoses or lines shall be as short as possible to minimize the amount of refrigerant contained in them.
- Cylinders shall be kept in an appropriate position according to the instructions.
- Ensure that the REFRIGERATING SYSTEM is earthed prior to charging the system with refrigerant.
- Label the system when charging is complete (if not already).
- Extreme care shall be taken not to overfill the REFRIGERATING SYSTEM.

Prior to recharging the system, it shall be pressure-tested with the appropriate purging gas. The system shall be leak tested on completion of charging, but prior to commissioning. A follow up leak test shall be carried out prior to leaving the site.

⚠ IMPORTANT

Prior to beginning work on systems containing flammable refrigerants, safety checks are necessary to ensure that the risk of ignition is minimised.

⚠ IMPORTANT

During repairs to sealed components, all electrical supplies shall be disconnected from the equipment being worked upon prior to any removal of sealed covers, etc. If it is absolutely necessary to have an electrical supply to equipment during servicing, then a permanently operating form of leak detection shall be located at the most critical point to warn of a potentially hazardous situation.

⚠ IMPORTANT

Particular attention shall be paid to the following to ensure that by working on electrical components, the casing is not altered in such a way that the level of protection is affected. This shall include damage to cables, excessive number of connections, terminals not made to original specification, damage to seals, incorrect fitting of glands, etc.

- Ensure that the apparatus is mounted securely.

- Ensure that seals or sealing materials have not degraded to the point that they no longer serve the purpose of preventing the ingress of flammable atmospheres. Replacement parts shall be in accordance with the manufacturer's specifications.

⚠ IMPORTANT

Before carrying out work on systems containing refrigerant, it is essential that the technician is completely familiar with the equipment and all its detail. It is recommended good practice that all refrigerants are recovered safely. Prior to the task being carried out, an oil and refrigerant sample shall be taken in case analysis is required prior to re-use of recovered refrigerant. It is essential that electrical power is available before the task is commenced.

Steps to ensure this are: becoming familiar with the equipment and its operation, isolating the system electrically, ensuring that before attempting the procedure that mechanical handling equipment is available, if required, for handling refrigerant cylinders, and that all personal protective equipment is available and being used correctly while the recovery process is supervised at all times by a competent person and that the recovery equipment and cylinders conform to the appropriate standards. Additionally, pump down refrigerant system, if possible, and if a vacuum is not possible, make a manifold so that refrigerant can be removed from various parts of the system. Make sure that cylinders are situated on the scales before recovery takes place. Start the recovery machine and operate in accordance with instructions. Do not overfill cylinders (no more than 80 % volume liquid charge). Do not exceed the maximum working pressure of the cylinder, even temporarily. When the cylinders have been filled correctly and the process completed, make sure that the cylinders and the equipment are removed from site promptly and all isolation valves on the equipment are closed off. Recovered refrigerant shall not be charged into another refrigerating system unless it has been cleaned and checked.

⚠ IMPORTANT

After completion of field piping for split systems, the field pipework shall be pressure tested with an inert gas and then vacuum tested prior to refrigerant charging, according to the following requirements;

– Field-made refrigerant joints indoors shall be tightness tested. The test method shall have a sensitivity of .2 oz. per year of refrigerant or better, under pressure.

No leak shall be detected.

⚠ IMPORTANT

When removing refrigerant from a system, either for servicing or decommissioning, it is recommended good practice that all refrigerants are removed safely.

When transferring refrigerant into cylinders, ensure that only appropriate refrigerant recovery cylinders are employed. Ensure that the correct number of cylinders for holding the total system charge is available. All cylinders to be used are designated for the recovered refrigerant and labelled for that refrigerant (i. e. special cylinders for the recovery of refrigerant). Cylinders shall be complete with pressure-relief valve and associated shut-off valves in good working order. Empty recovery cylinders are evacuated and, if possible, cooled before recovery occurs.

The recovery equipment shall be in good working order with a set of instructions concerning the equipment that is at hand and shall be suitable for the recovery of all appropriate refrigerants including, when applicable, flammable refrigerants. In addition, a set of calibrated weighing scales shall be available and in good working order. Hoses shall be complete with leak-free disconnect couplings and in good condition. Before using the recovery machine, check that it is in satisfactory working order, has been properly maintained and that any associated electrical components are sealed to prevent ignition in the event of a refrigerant release. Consult manufacturer if in doubt.

The recovered refrigerant shall be returned to the refrigerant supplier in the correct recovery cylinder, and the relevant waste transfer note arranged. Do not mix refrigerants in recovery units and especially not in cylinders.

If compressors or compressor oils are to be removed, ensure that they have been evacuated to an acceptable level to make certain that flammable refrigerant does not remain within the lubricant. The evacuation process shall be carried out prior to returning the compressor to the suppliers. Only electric heating to the compressor body shall be employed to accelerate this process. When oil is drained from a system, it shall be carried out safely.

⚠ WARNING

If this appliance is conditioning a space with an area smaller than TAmin, then that space must be without continuously operating open flames (e.g. an operating gas appliance) or other potential ignition sources (e.g. an operating electric heater or similar hot surface). A flame-producing device may be installed in the same space if the device is provided with an effective flame arrest system.

NOTE *– R-454B is an A2L refrigerant. The system installation must meet the following parameters based upon total refrigerant charge (line set included). TAmin (Total minimum conditioned area) is the minimum allowable conditioned area based upon the total system charge at sea level. Values must be multiplied by altitude adjustment factor at installed altitude.*

Qmin table refers to minimum airflow requirements during refrigerant leak mitigation by the refrigerant detection system, based upon total system charge.

See tables below.

TAmin Table

Charge (lb)	10.0	15.0	20.0	25.0	30.0
Charge (kg)	4.5	6.8	9.1	11.3	13.6
Minimum Conditioned Area (ft2)	149.9	224.9	299.9	374.8	449.8
Minimum Conditioned Area (m2)	13.9	20.9	27.9	34.8	41.8

NOTE *– Multiply values in TAmin table by the Altitude Adjustment Factors to correct TAmin based on installed altitude.*

Altitude Adjustment Factor

Altitude (m)	0	200	400	600	800	1000	1200	1400	1600
Altitude (ft)	0	660	1310	1970	2620	3280	3940	4590	5250
Adj. Factor	1	1	1	1	1.02	1.05	1.04	1.1	1.12
Altitude (m)	1600	1800	2000	2200	2400	2600	2800	3000	3200
Altitude (ft)	5250	5910	6560	7220	7870	8530	9190	9840	10500
Adj. Factor	1.12	1.15	1.18	1.21	1.25	1.28	1.32	1.36	1.4

Qmin Table

Refrigerant Charge lb (kg)	CFM Required	Refrigerant Charge lb (kg)	CFM Required
5 (2.3)	135	18 (8.1)	487
6 (2.7)	162	19 (8.6)	514
7 (3.2)	189	20 (9.1)	541
8 (3.6)	216	21 (9.5)	568
9 (4.1)	244	22 (10)	595
10 (4.5)	271	23 (10.4)	622
11 (5)	298	24 (10.9)	649
12 (5.4)	325	25 (11.3)	676
13 (5.9)	352	26 (11.7)	704
14 (6.4)	379	27 (12.2)	731
15 (6.8)	406	28 (12.7)	758
16 (7.3)	433	29 (13.2)	785
17 (7.7)	460	30 (13.6)	812

Installation Clearances

SINGLE-UNIT INSTALLATION

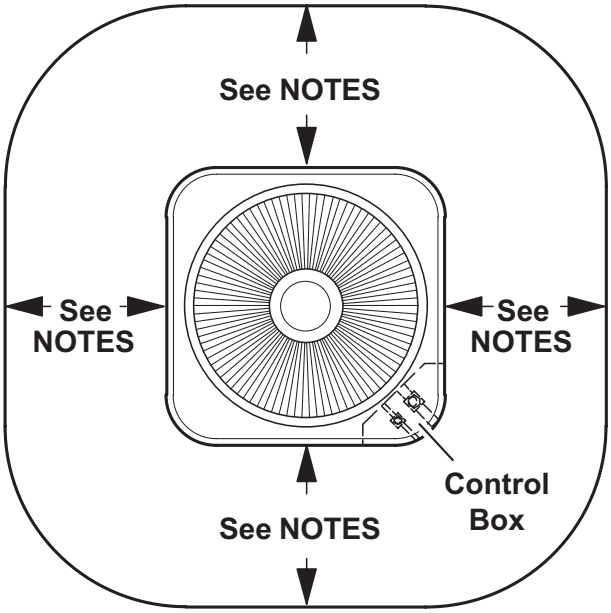

Single-Unit Installation Notes:

- Service Clearance - 24 in. (610 mm) on one of the sides adjacent to the Control Box.
- One of other three sides must be 36 in. (914 mm).
- One of the two remaining sides may be 12 in. (305 mm).
- The remaining side may be 6 in. (152 mm).
- 48 in. (1219 mm) clearance required on top of unit.

MULTI-UNIT INSTALLATIONS

Single Row

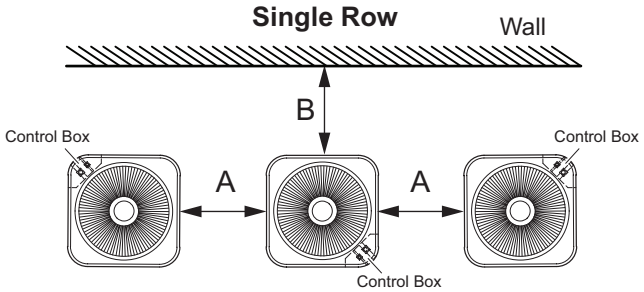

Required Minimum Clearances	A	B
	12 in. (305 mm) [18 in. (457 mm) recommended]	12 in. (305 mm)

Multiple Rows

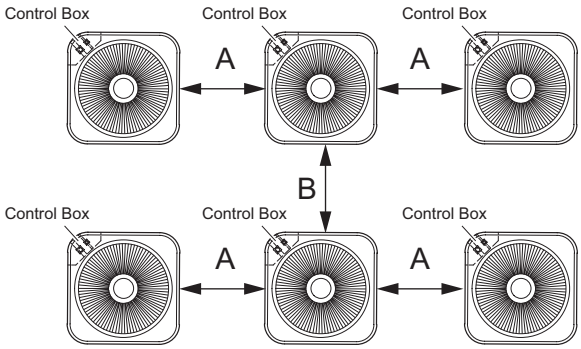

Required Minimum Clearances	A	B
	12 in. (305 mm) [18 in. (457 mm) recommended]	24 in. (610 mm)

Multi-Unit Installation Notes:

- Recommended service clearance of 24 in. (610 mm) on one side.
- 48 in. (1219 mm) clearance required on top of the unit.

Model Number Identification

ML 16 K P 2 - 036 - 230 A 01

Product Tier
ML = Merit® Series

Nominal SEER2
16 = 14.0 to 16.0

Refrigerant Type
K = R-454B

Unit Type
P = Heat Pump

Cooling Stages
2 = Two-Stage Compressor

Nominal Cooling Capacity
024 = 2 tons
036 = 3 tons
048 = 4 tons
060 = 5 tons

Voltage
230 = 208/230V-1 phase-60Hz

Ratings Revision Number

Minor Revision Number

⚠ WARNING

Electric Shock Hazard. Can cause injury or death. Unit must be properly grounded in accordance with national and local codes.

Line voltage is present at all components when unit is not in operation on units with single-pole contactors. Disconnect all remote electric power supplies before opening access panel. Unit may have multiple power supplies.

⚠ IMPORTANT

The Clean Air Act of 1990 bans the intentional venting of refrigerant (CFCs, HCFCs and HFCs) as of July 1, 1992. Approved methods of recovery, recycling or reclaiming must be followed. Fines and/or incarceration may be levied for noncompliance.

Dimensions

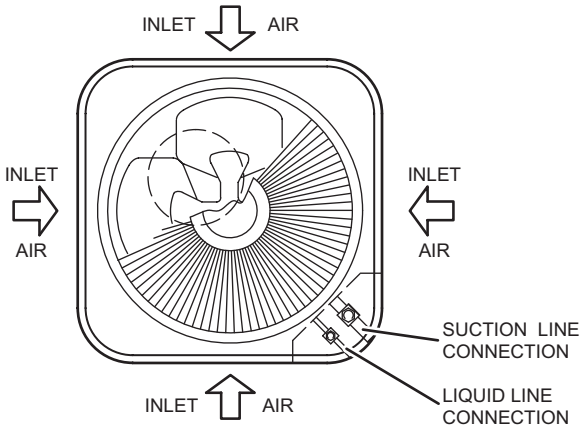

TOP VIEW

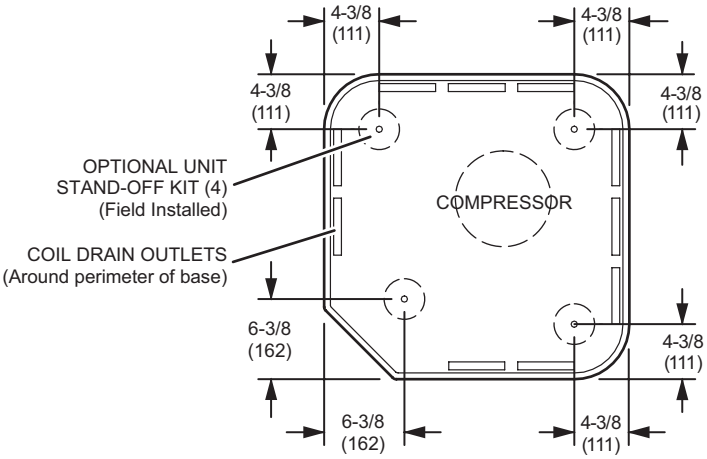

TOP VIEW BASE SECTION

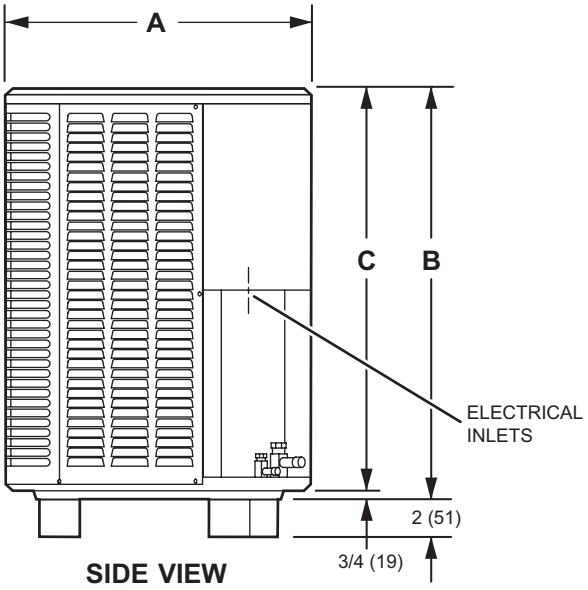

SIDE VIEW

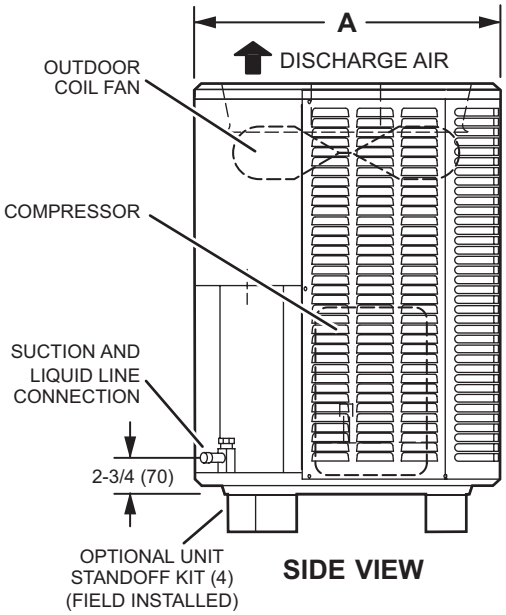

SIDE VIEW

Size	A Width and Depth		B Height		C	
	in.	mm	in.	mm	in.	mm
024	28-1/4	718	43-1/4	1099	42-1/2	1080
036	32-1/4	819	33-1/4	845	32-1/2	826
048	32-1/4	819	37-1/4	946	36-1/2	927
060	32-1/4	819	43-1/4	1099	42-1/2	1080

SPECIFICATIONS

Size		024	036	048	060
Nominal Tonnage		2	3	4	5
Sound Rating Number (dBA)	Low	73	72	78	77
	High	74	75	77	77
Connections (sweat)	Liquid line (OD) - in.	3/8	3/8	3/8	3/8
	Vapor line (OD) - in.	3/4	7/8	7/8	1-1/8
Refrigerant (30 ft. Line Set)	[1] R-454B charge furnished	7 lbs. 7 oz.	9 lbs. 9 oz.	10 lbs. 10 oz.	11 lbs. 1 oz.
Indoor Unit Expansion Valve (TXV)		**26Z70**	**26Z70**	**26Z71**	**26Z72**
Outdoor Coil	Net face area - ft.² Outer coil	24.5	22.2	24.93	29.09
	Inner coil	- - -	21.5	24.13	28.16
	Tube diameter - in.	5/16	5/16	5/16	5/16
	Rows	1	2	2	2
	Fins - in.	22	22	22	22
Outdoor Fan	HP	1/8	1/5	1/5	1/5
	Diameter - in.	22	26	26	26
	Blades	2	2	4	4
	Cfm	2840	3590	4110	4060
	Rpm	825	825	825	825
	Watts	127	220	250	260
Shipping Data - lbs.		179	207	230	263

ELECTRICAL DATA

	Line voltage data (Volts-Phase-Hz)	208/230-1-60	208/230-1-60	208/230-1-60	208/230-1-60
	[2] Maximum overcurrent protection (MOCP) amps	25	35	40	50
	[3] Minimum circuit ampacity (MCA)	15.4	21.3	25.5	34.1
Compressor	Rated Load Amps	10.3	14.9	18.3	25.2
	Locked Rotor Amps	62	90	138	147.3
Fan Motor	Full Load Amps	2.6	2.6	2.6	2.6

OPTIONAL ACCESSORIES - ORDER SEPARATELY

Compressor Crankcase Heater		**93M04**	•	Factory	Factory	Factory
Compressor Hard Start Kit	Copeland	**10J42**	•	•	•	•
Compressor Sound Cover		**18J42**	•	•	•	•
Compressor Low Ambient Cut-Off		**45F08**	•	•	•	•
Freezestat	3/8 in.	**93G35**	•	•	•	•
[4] Low Ambient Kit (30°F)		**54M89**	•	•	•	•
Mild Weather Kit		**11B97**	•	•	•	•
Outdoor Thermostat Kit		**10Z23**	•	•	•	•
Refrigerant Line Sets Liquid x Suction OD | Insulation Thickness | Length	3/8 x 3/4 | 3/8 | 20 ft.	**89J56**	•			
	3/8 x 3/4 | 3/8 | 30 ft.	**89J57**				
	3/8 x 3/4 | 3/8 | 50 ft.	**89J59**				
	3/8 x 7/8 | 3/8 | 30 ft.	**89J60**		•	•	
	3/8 x 7/8 | 3/8 | 50 ft.	**89J62**				
	3/8 x 1-1/8 | 3/8 | 50 ft.	**73P91**				•
Unit Stand-Off Kit		**94J45**	•	•	•	•

NOTE - Extremes of operating range are plus 10% and minus 5% of line voltage.

[1] Refrigerant charge is sufficient 30 ft. of line set. For longer line set requirements see the Installation Instructions or unit Charging Label for information about line set length and additional refrigerant charge required.

[2] HACR type breaker or fuse.

[3] Refer to National or Canadian Electrical Code manual to determine wire, fuse and disconnect size requirements.

[4] Crankcase Heater and Freezestat are recommended with Low Ambient Kit.

Typical Unit Parts Arrangement

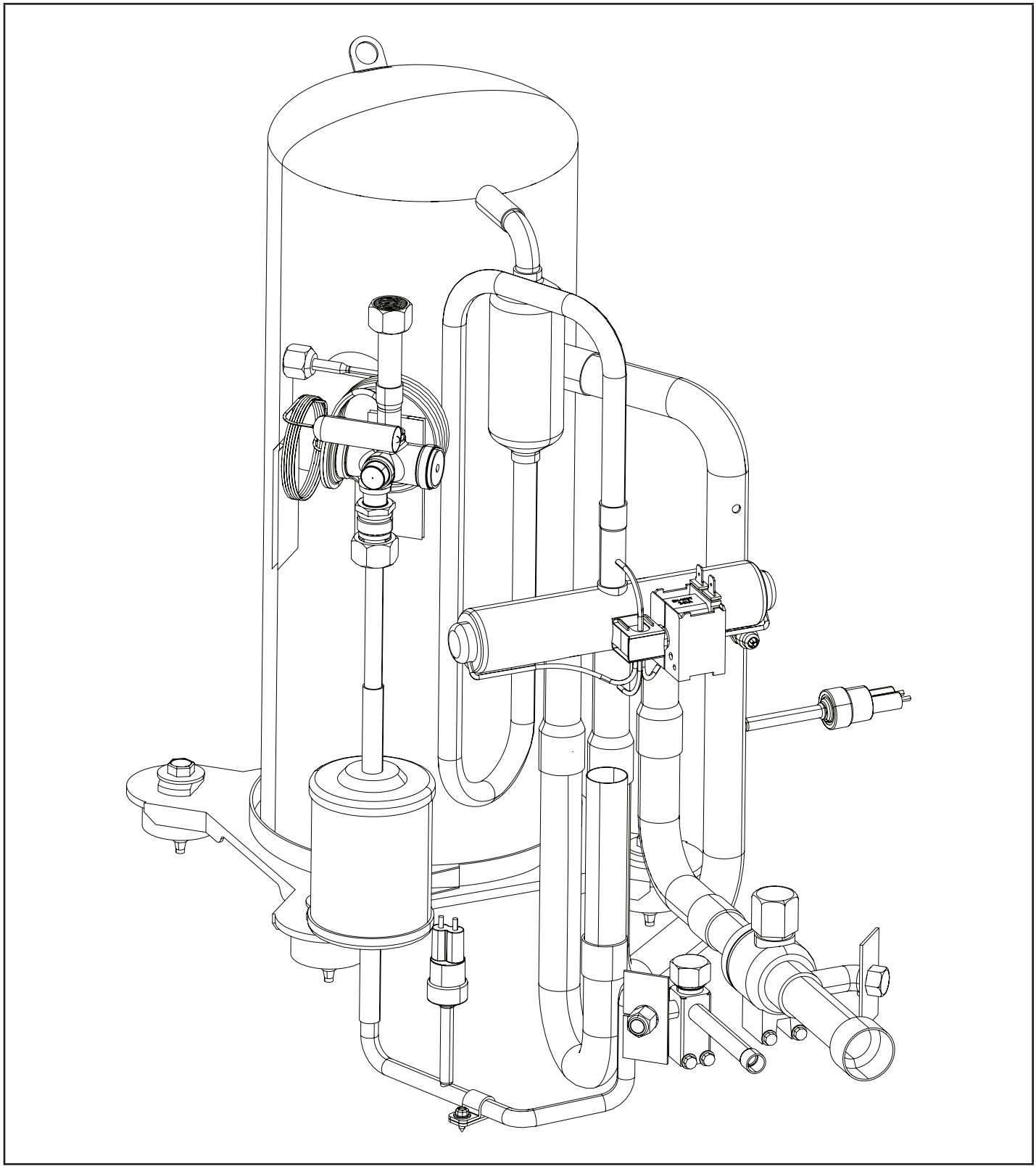

FIGURE 1. Typical Plumbing Arrangement

Operating Gauge Set and Service Valves

TORQUE REQUIREMENTS

When servicing or repairing heating, ventilating, and air conditioning components, ensure the fasteners are appropriately tightened. Table 1 lists torque values for fasteners.

⚠ IMPORTANT

Only use Allen wrenches of sufficient hardness (50Rc - Rockwell Harness Scale minimum). Fully insert the wrench into the valve stem recess.

Service valve stems are factory-torqued (from 9 ft-lbs for small valves, to 25 ft-lbs for large valves) to prevent refrigerant loss during shipping and handling. Using an Allen wrench rated at less than 50Rc risks rounding or breaking off the wrench, or stripping the valve stem recess.

See the Lennox Service and Application Notes #C-08-1 for further details and information.

⚠ IMPORTANT

To prevent stripping of the various caps used, the appropriately sized wrench should be used and fitted snugly over the cap before tightening.

TABLE 1. Torque Requirements

Parts	Recommended Torque	
Service valve cap	8 ft.- lb.	11 NM
Sheet metal screws	16 ft.- lb.	2 NM
Machine screws #10	28 ft.- lb.	3 NM
Compressor bolts	90 in.- lb.	10 NM
Gauge port seal cap	8 ft.- lb.	11 NM

USING MANIFOLD GAUGE SET

When checking the system charge, only use a manifold gauge set that features low loss anti-blow back fittings.

Manifold gauge set used with R-454B refrigerant systems must be capable of handling the higher system operating pressures. The gauges should be rated for use with pressures of 0 - 800 psig on the high side and a low side of 30” vacuum to 250 psig with dampened speed to 500 psi. Gauge hoses must be rated for use at up to 800 psig of pressure with a 4000 psig burst rating.

OPERATING SERVICE VALVES

The liquid and vapor line service valves are used for removing refrigerant, flushing, leak testing, evacuating, checking charge and charging. Each valve is equipped with a service port which has a factory-installed valve stem. Figure 2 provides information on how to access and operate both angle and ball service valves

SERVICE VALVES ANGLE AND BALL

Operating Angle Type Service Valve:

1. Remove stem cap with an appropriately sized wrench.
2. Use a service wrench with a hex-head extension (3/16” for liquid line valve sizes and 5/16” for vapor line valve sizes) to back the stem out counterclockwise as far as it will go.

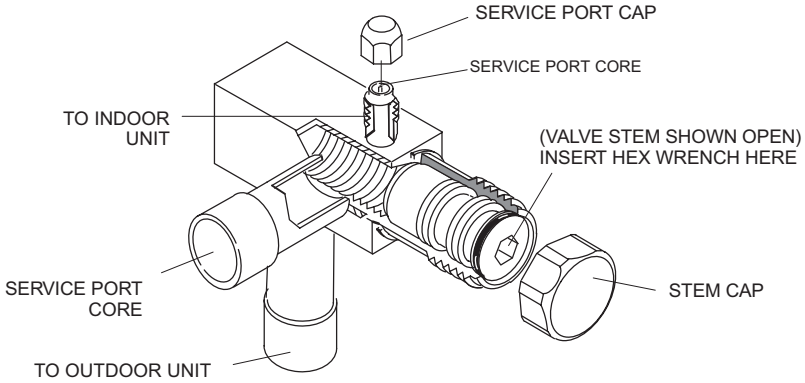

ANGLE-TYPE SERVICE VALVE (BACK-SEATED OPENED)

When service valve is **OPEN**, the service port is open to linE set, indoor and outdoor unit.

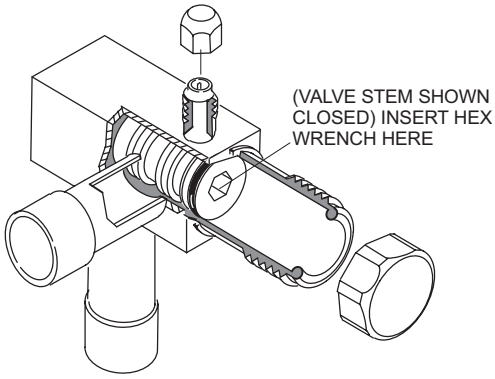

ANGLE-TYPE SERVICE VALVE (FRONT-SEATED CLOSED)

WHEN SERVICE VALVE IS **CLOSED**, THE SERVICE PORT IS OPEN TO THE LINE SET AND INDOOR UNIT.

Operating Ball Type Service Valve:

1. Remove stem cap with an appropriately sized wrench.
2. Use an appropriately sized wrenched to open. To open valve, roate stem counterclockwise 90°. To close rotate stem clockwise 90°.

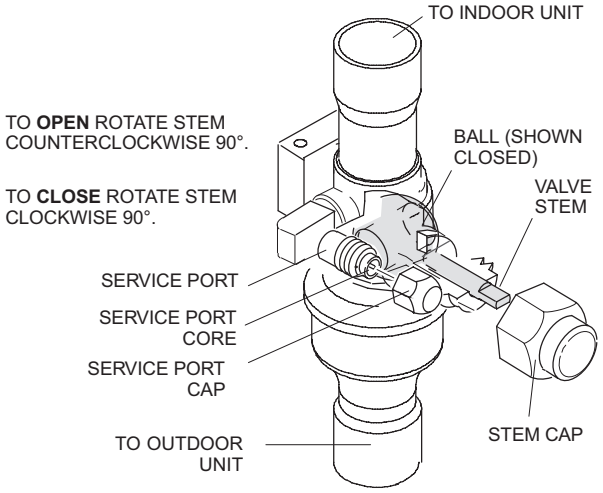

To Access Service Port:

A service port cap protects the service port core from contamination and serves as the primary leak seal.

1. Remove service port cap with an appropriately sized wrench.
2. Connect gauge set to service port.
3. When testing is completed, replace service port cap and tighten as follows:
   - With torque wrench: Finger tighten and torque cap per table 3.
   - Without torque wrench: Finger tighten and use an appropriately sized wrench to turn an additional 1/6 turn clockwise.

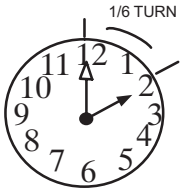

Reinstall Stem Cap:

Stem cap protects the valve stem from damage and serves as the primary seal. Replace the stem cap and tighten as follows:

- With Torque Wrench: Finger tighten and then torque cap per table 3.
- Without Torque Wrench: Finger tighten and use an appropriately sized wrench to turn an additional 1/12 turn clockwise.

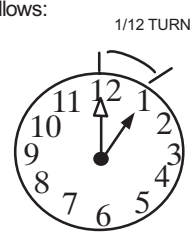

NOTE — A label with specific torque requirements may be affixed to the stem cap. If the label is present, use the specified torque.

FIGURE 2. Angle and Ball Service Valves

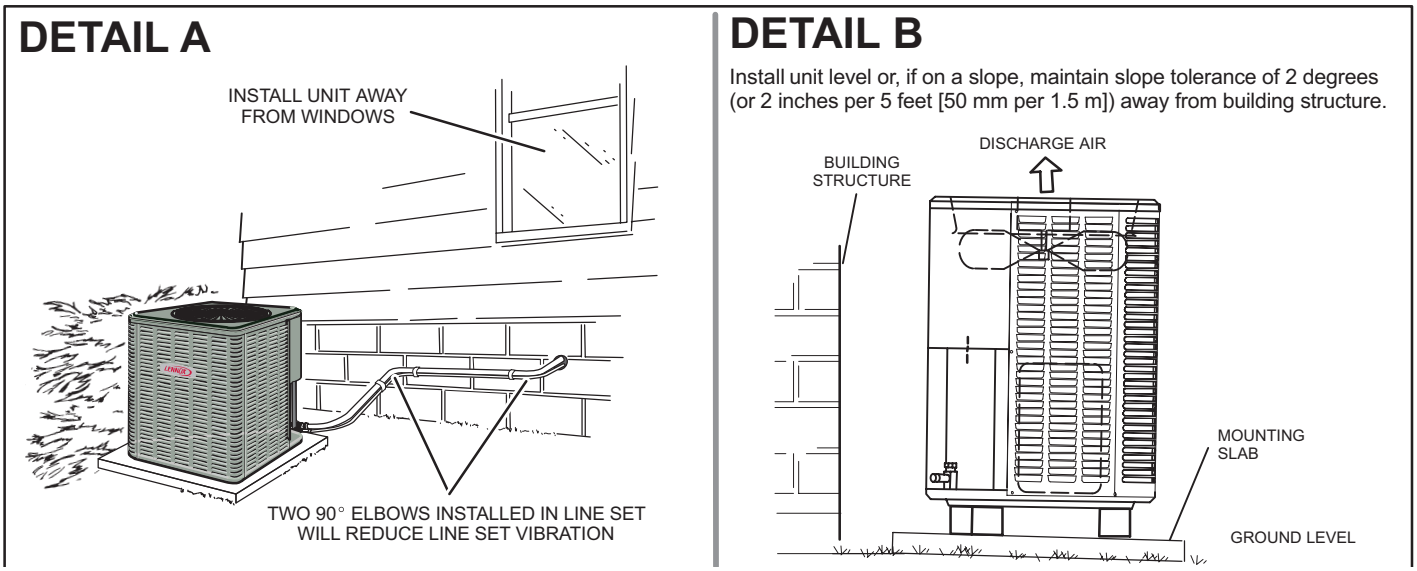

FIGURE 3. Placement and Slab Mounting

Unit Placement

See Unit Dimensions on page 3 for sizing mounting slab, platforms or supports. Refer to page 2 for mandatory installation clearance requirements.

⚠ CAUTION

In order to avoid injury, take proper precaution when lifting heavy objects..

POSITIONING CONSIDERATIONS

Consider the following when positioning the unit:

- Some localities are adopting sound ordinances based on the unit's sound level registered from the adjacent property, not from the installation property. Install the unit as far as possible from the property line.
- When possible, do not install the unit directly outside a window. Glass has a very high level of sound transmission. For proper placement of unit in relation to a window see the provided illustration in figure 3, detail A.

PLACING UNIT ON SLAB

When installing unit at grade level, the top of the slab should be high enough above grade so that water from higher ground will not collect around the unit. The slab should have a slope tolerance as described in figure 3, detail B.

ROOF MOUNTING

Install the unit a minimum of 6 inches (152 mm) above the roof surface to avoid ice build-up around the unit. Locate the unit above a load bearing wall or area of the roof that can adequately support the unit. Consult local codes for rooftop applications.

If unit coil cannot be mounted away from prevailing winter winds, a wind barrier should be constructed. Size barrier at least the same height and width as outdoor unit. Mount barrier 24 inches (610 mm) from the sides of the unit in the direction of prevailing winds.

⚠ NOTICE

Roof Damage!

This system contains both refrigerant and oil. Some rubber roofing material may absorb oil, causing the rubber to swell. Bubbles in the rubber roofing material can cause leaks. Protect the roof surface to avoid exposure to refrigerant and oil during service and installation. Failure to follow this notice could result in damage to roof surface.

Removing and Installing Louvered Panels

WARNING

To prevent personal injury, or damage to panels, unit or structure, be sure to observe the following:

While installing or servicing this unit, carefully stow all removed panels out of the way, so that the panels will not cause injury to personnel, nor cause damage to objects or structures nearby, nor will the panels be subjected to damage (e.g., being bent or scratched).

While handling or stowing the panels, consider any weather conditions, especially windy conditions, that may cause panels to be blown around and battered.

REMOVAL

STEP 1
TO REMOVE PANEL, REMOVE MOUNTING SCREWS SECURING PANEL TO THE UNIT.

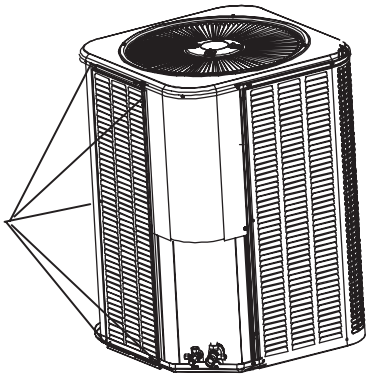

STEP 2
SLIGHTLY LIFT PANEL IN ORDER TO CLEAR SIDE LIPS OF PANEL FROM BASE OF UNIT.

STEP 3
TILT PANEL OUT SLIGHTLY AND PULL DOWNWARD TO REMOVE.

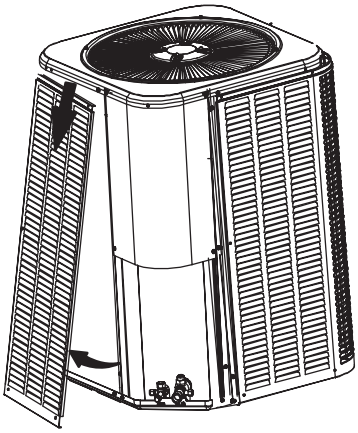

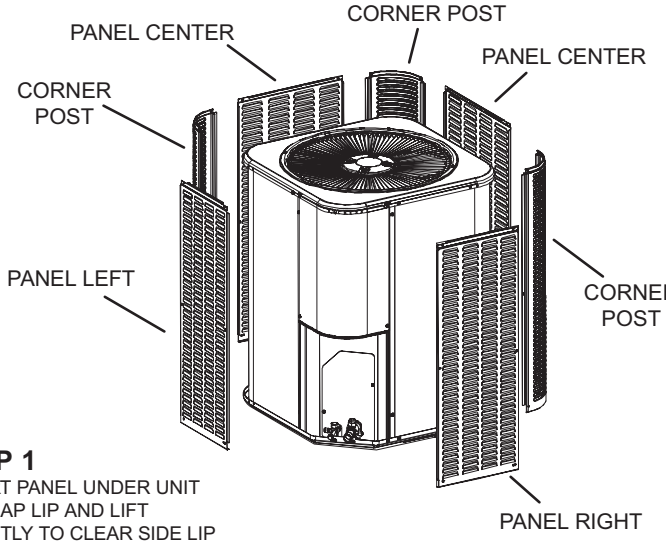

STEP 1
INSERT PANEL UNDER UNIT TOP CAP LIP AND LIFT SLIGHTLY TO CLEAR SIDE LIP OF PANEL FROM BASE.

STEP 2
MOVE PANEL IN TOWARDS UNIT. ALIGN LEFT/RIGHT SIDE LIPS OF PANEL WITH GROOVE INSERTS ALONG LEFT/RIGHT SIDE OF UNIT.

STEP 3
SECURE PANEL, WITH MOUNTING SCREWS.

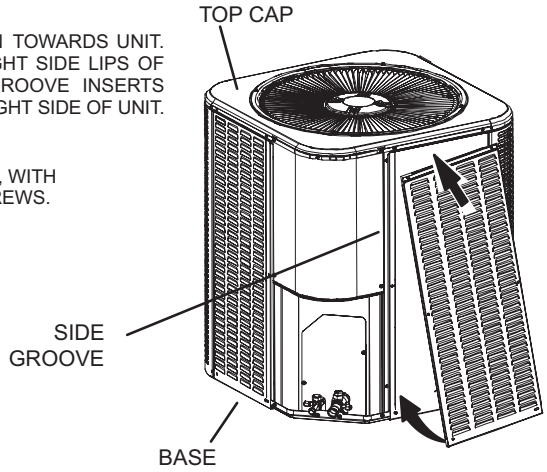

PANEL INSTALLATION

FIGURE 4. Louvered Panels

New or Replacement Line Set

This section provides information on new installation or replacement of existing line set. If a new or replacement line set is not required, then proceed to Brazing Connections on page .

If refrigerant lines are routed through a wall, seal and isolate the opening so vibration is not transmitted to the building. Pay close attention to line set isolation during installation of any HVAC system. When properly isolated from building structures (walls, ceilings. floors), the refrigerant lines will not create unnecessary vibration and subsequent sounds.

REFRIGERANT LINE SET

Field refrigerant piping consists of liquid and suction lines from the outdoor unit (braze connections) to the indoor unit coil (flare or braze connections). Use Lennox L15 (braze, non-flare) series line set, or use field-fabricated refrigerant lines as listed in table 2.

TABLE 2

REFRIGERANT LINE SET – INCHES (MM)					
Model	Valve Field Connections		Recommended Line Set		
	Liquid Line	Vapor Line	Liquid Line	Vapor Line	L15 Line Sets
-018	3/8 in. (10 mm)	3/4 in. (19 mm)	3/8 in. (10 mm)	3/4 in. (19 mm)	L15-41 15 ft. - 50 ft. (4.6 m - 15 m)
-024					
-030					
-036	3/8 in. (10 mm)	7/8 in. (22 mm)	3/8 in. (10 mm)	7/8 in. (22 mm)	L15-65 15 ft. - 50 ft. (4.6 m - 15 m)
-042					
-048					
-060	3/8 in. (10 mm)	1-1/8 in. (28 mm)	3/8 in. (10 mm)	1-1/8 in. (28 mm)	Field Fabricated
NOTE - Some applications may require a field-provided 7/8" to 1-1/8" adapter.					

***NOTE** – When installing refrigerant lines longer than 50 feet, contact Lennox Technical Support Product Applications for assistance or Lennox piping manual. To obtain the correct information from Lennox, be sure to communicate the following points*:

- Model (ML16KP2) and size of unit (e.g. -060).
- Line set diameters for the unit being installed as listed in table 2 and total length of installation.
- Number of elbows and if there is a rise or drop of the piping.

⚠ IMPORTANT

Mineral oils are not compatible with R-454B. If oil must be added, it must be a Polyol ester oil.

The compressor is charged with sufficient Polyol ester oil for line set lengths up to 50 feet. Recommend adding oil to system based on the amount of refrigerant charge in the system. No need to add oil in system with 20 pounds of refrigerant or less. For systems over 20 pounds - add one ounce for every five pounds of refrigerant.

Recommended topping-off POE oils are Mobil EAL ARCTIC 22 CC or ICI EMKARATE RL32CF.

LINE SET ISOLATION

⚠ CAUTION

Brazing alloys and flux contain materials which are hazardous to your health.

Avoid breathing vapors or fumes from brazing operations. Perform operations only in well-ventilated areas.

Wear gloves and protective goggles or face shield to protect against burns.

Wash hands with soap and water after handling brazing alloys and flux.

⚠ IMPORTANT

The Clean Air Act of 1990 bans the intentional venting of refrigerant (CFC's and HCFC's) as of July 1, 1992. Approved methods of recovery, recycling or reclaiming must be followed. Fines and/or incarceration may be levied for non-compliance.

⚠ IMPORTANT

If this unit is being matched with an approved line set or indoor unit coil that was previously charged with mineral oil, or if it is being matched with a coil which was manufactured before January of 1999, the coil and line set must be flushed prior to installation. Take care to empty all existing traps. Polyol ester (POE) oils are used in Lennox units charged with R-454B refrigerant. Residual mineral oil can act as an insulator, preventing proper heat transfer. It can also clog the expansion device and reduce system performance and capacity.

Failure to properly flush the system, per this instruction and the detailed Installation and Service Procedures manual will void the warranty.

LINE SET

IMPORTANT — Refrigerant lines must not contact structure.

INSTALLATION

Line Set Isolation — The following illustrations are examples of proper refrigerant line set isolation:

REFRIGERANT LINE SET — TRANSITION FROM VERTICAL TO HORIZONTAL

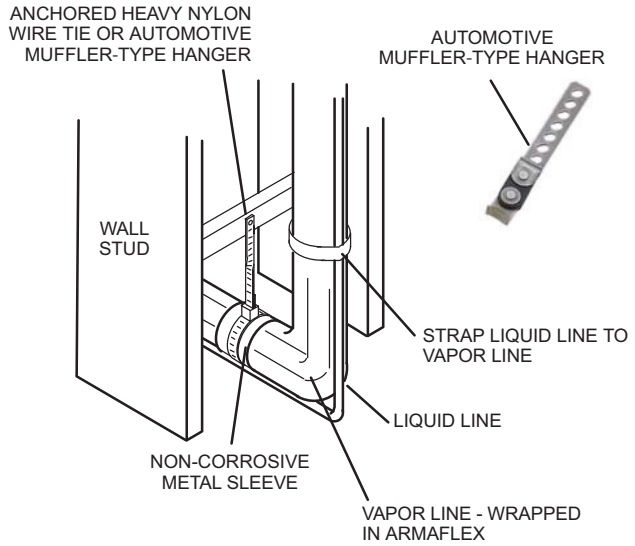

REFRIGERANT LINE SET — INSTALLING HORIZONTAL RUNS

To hang line set from joist or rafter, use either metal strapping material or anchored heavy nylon wire ties.

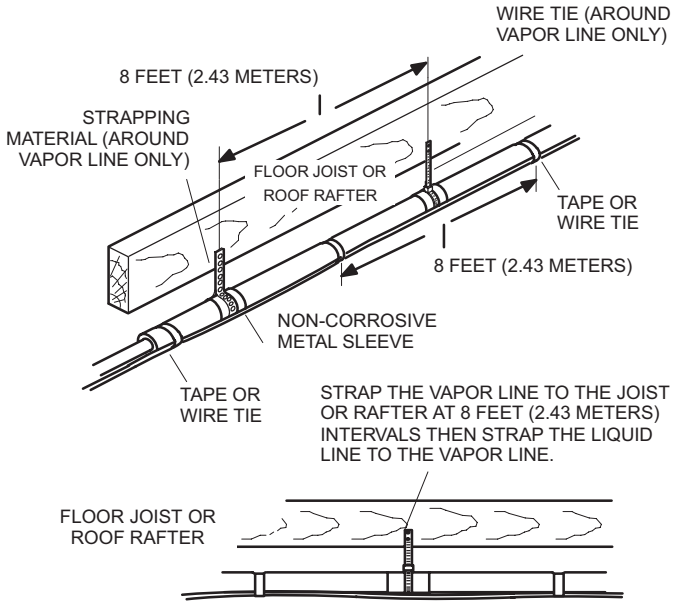

REFRIGERANT LINE SET — INSTALLING VERTICAL RUNS (NEW CONSTRUCTION SHOWN)

NOTE — Insulate liquid line when it is routed through areas where the surrounding ambient temperature could become higher than the temperature of the liquid line or when pressure drop is equal to or greater than 20 psig.

IMPORTANT — Refrigerant lines must not contact wall

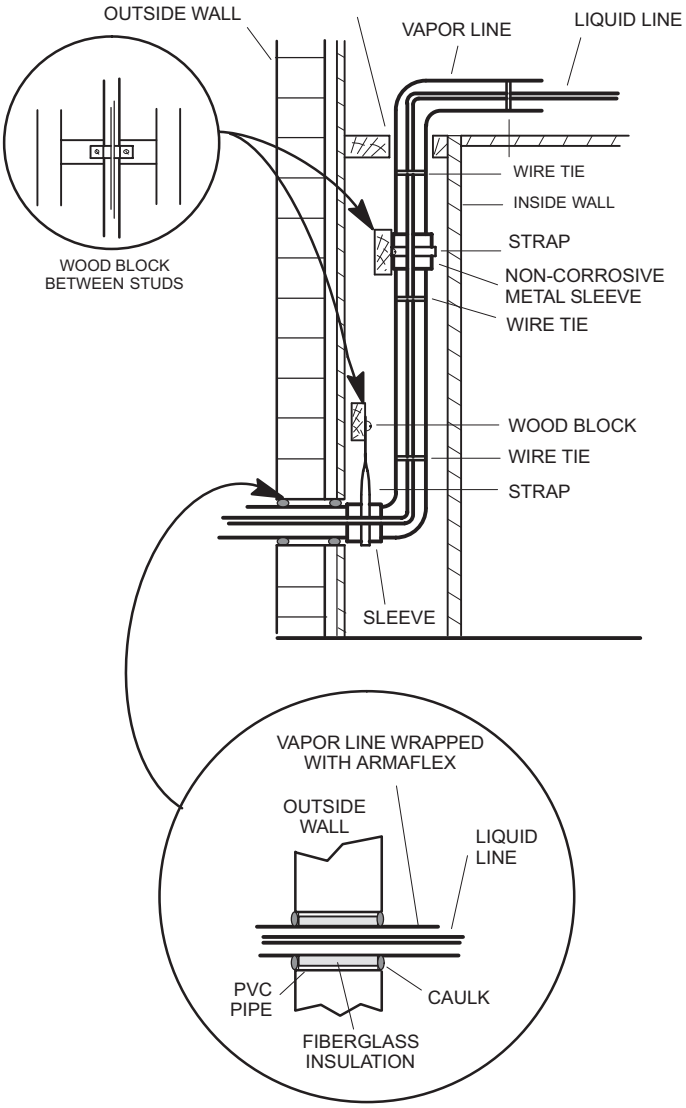

***NOTE** — Similar installation practices should be used if line set is to be installed on exterior of outside wall.*

WARNING — Polyvinyl (PVE) oils used with R-454B refrigerant absorb moisture very quickly. It is very important that the refrigerant system be kept closed as much as possible. DO NOT remove line set caps or service valve stub caps until you are ready to make connections.

FIGURE 5. Line Set Installation

Brazing Connections

Use the procedures outlined in figures 6 and 7 for brazing line set connections to service valves.

⚠ WARNING

Danger of fire. Bleeding the refrigerant charge from only the high side may result in pressurization of the low side shell and suction tubing. Application of a brazing torch to a pressurized system may result in ignition of the refrigerant and oil mixture. Check the high and low pressures before applying heat.

⚠ WARNING

When using a high pressure gas such as nitrogen to pressurize a refrigeration or air conditioning system, use a regulator that can control the pressure down to 1 or 2 psig (6.9 to 13.8 kPa).

⚠ CAUTION

Brazing alloys and flux contain materials which are hazardous to your health.

Avoid breathing vapors or fumes from brazing operations. Perform operations only in well-ventilated areas.

Wear gloves and protective goggles or face shield to protect against burns.

Wash hands with soap and water after handling brazing alloys and flux.

⚠ IMPORTANT

Allow braze joint to cool before removing the wet rag from the service valve. Temperatures above 250ºF can damage valve seals.

⚠ IMPORTANT

Use silver alloy brazing rods with 5% minimum silver alloy for copper-to-copper brazing. Use 45% minimum alloy for copper-to-brass and copper-to-steel brazing.

⚠ WARNING

Fire, Explosion and Personal Safety hazard. Failure to follow this warning could result in damage, personal injury or death.

Never use oxygen to pressurize or purge refrigeration lines. Oxygen, when exposed to a spark or open flame, can cause fire and/or an explosion, that could result in property damage, personal injury or death.

1 CUT AND DEBUR

Cut ends of the refrigerant lines square (free from nicks or dents) and debur the ends. The pipe must remain round. Do not crimp end of the line.

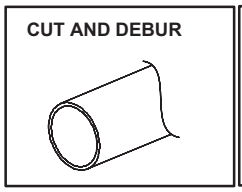

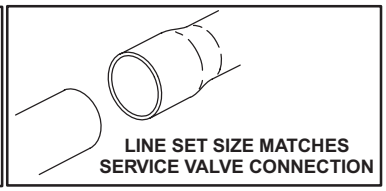

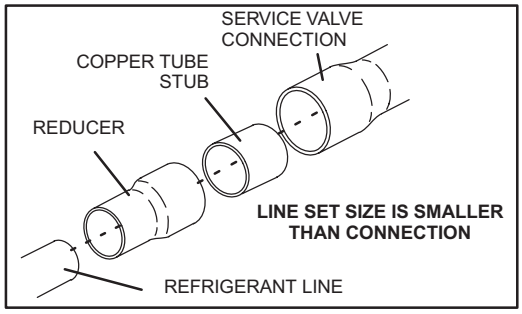

DO NOT CRIMP SERVICE VALVE CONNECTOR WHEN PIPE IS SMALLER THAN CONNECTION

2 CAP AND CORE REMOVAL

Remove service cap and core from both the suction / vapor and liquid line service ports.

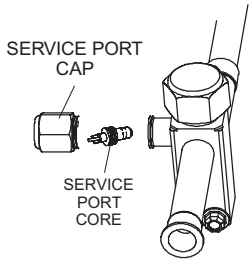

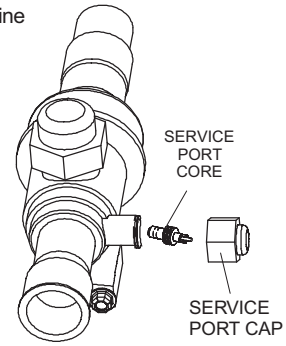

3 ATTACH THE MANIFOLD GAUGE SET FOR BRAZING LIQUID AND SUCTION / VAPOR LINE SERVICE VALVES

Flow regulated nitrogen (at 1 to 2 psig) through the low-side refrigeration gauge set into the liquid line service port valve, and out of the suction / vapor line service port valve.

A Connect gauge set low pressure side to liquid line service valve (service port).

B Connect gauge set center port to bottle of nitrogen with regulator.

C Remove core from valve in suction / vapor line service port to allow nitrogen to escape.

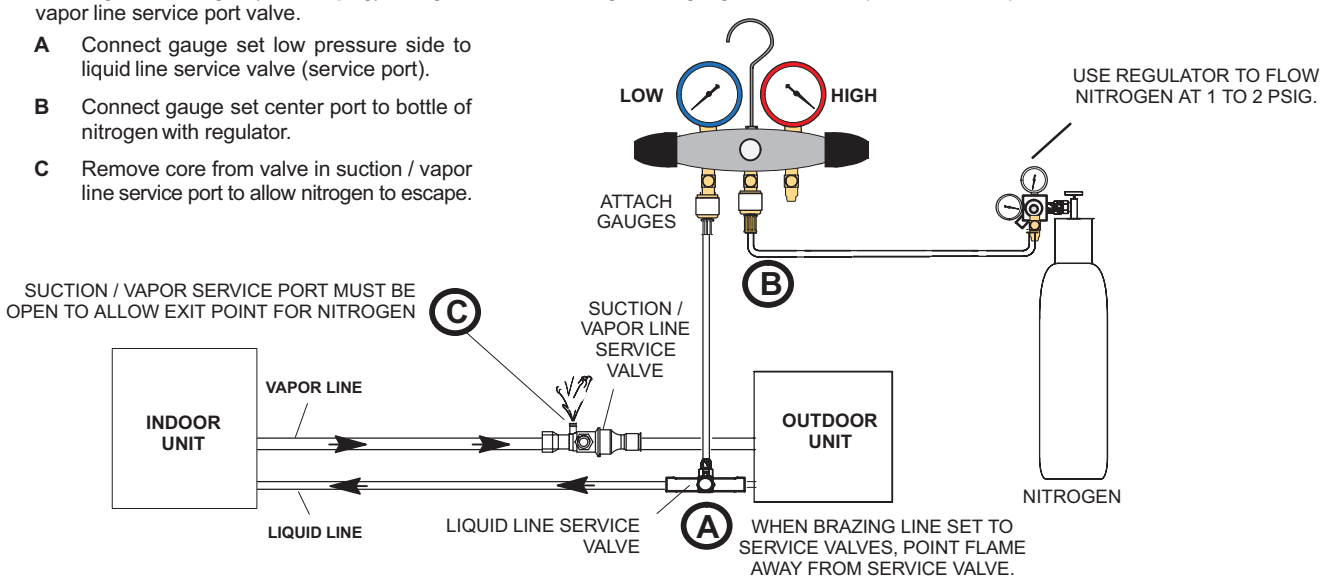

FIGURE 6. Brazing Procedures

4 WRAP SERVICE VALVES

To help protect service valve seals during brazing, wrap water-saturated cloths around service valve bodies and copper tube stubs. Use additional water-saturated cloths underneath the valve body to protect the base paint.

5 FLOW NITROGEN

Flow regulated nitrogen (at 1 to 2 psig) through the refrigeration gauge set into the valve stem port connection on the liquid service valve and out of the suction / vapor valve stem port. See steps **3A, 3B** and **3C** on manifold gauge set connections.

6 BRAZE LINE SET

Wrap both service valves with water-saturated cloths as illustrated here and as mentioned in step 4, before brazing to line set. Cloths must remain water-saturated throughout the brazing and cool-down process.

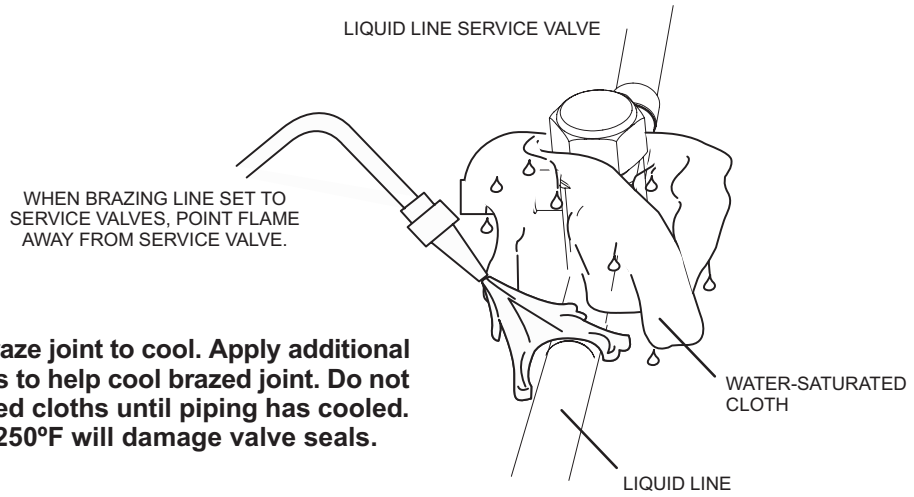

IMPORTANT - Allow braze joint to cool. Apply additional water-saturated cloths to help cool brazed joint. Do not remove water-saturated cloths until piping has cooled. Temperatures above 250ºF will damage valve seals.

WARNING

FIRE, PERSONAL INJURY, OR PROPERTY DAMAGE may result if you do not wrap a water-saturated cloth around both liquid and suction line service valve bodies and copper tube stub while brazing the line set! The braze, when complete, must be quenched with water to absorb any residual heat.

Do not open service valves until refrigerant lines and indoor coil have been leak-tested and evacuated. Refer to Installation and Service Procedures manual found on LennoxPros.com.

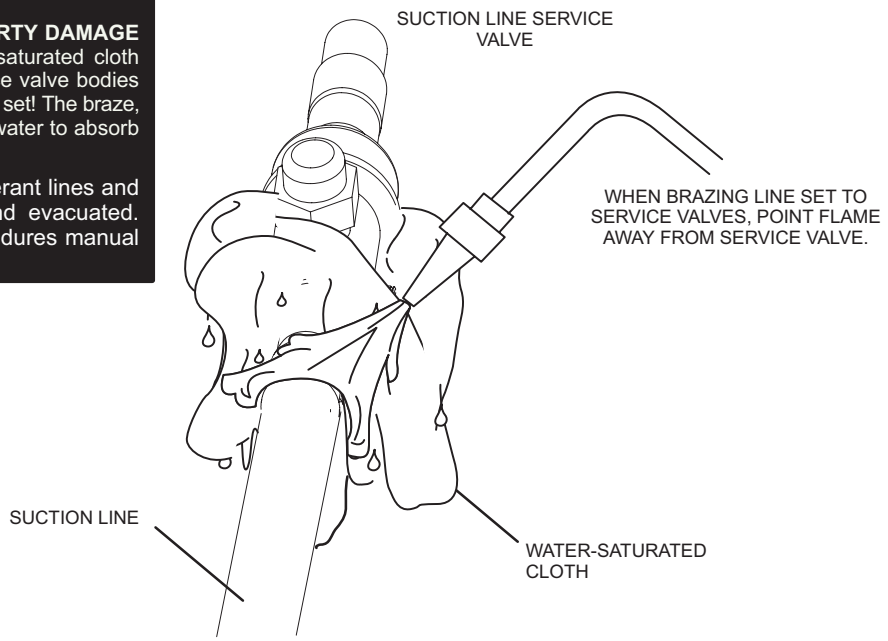

7 PREPARATION FOR NEXT STEP

Disconnect manifold gauge set from service ports after all connections have been brazed. Apply additional water-saturated cloths to both service valves to cool piping. Once piping is cool, remove all water-saturated cloths.

FIGURE 7. Brazing Procedures (continued)

Flushing Line Set and Indoor Coil

1 TYPICAL EXISTING EXPANSION VALVE REMOVAL PROCEDURE (UNCASED COIL SHOWN)

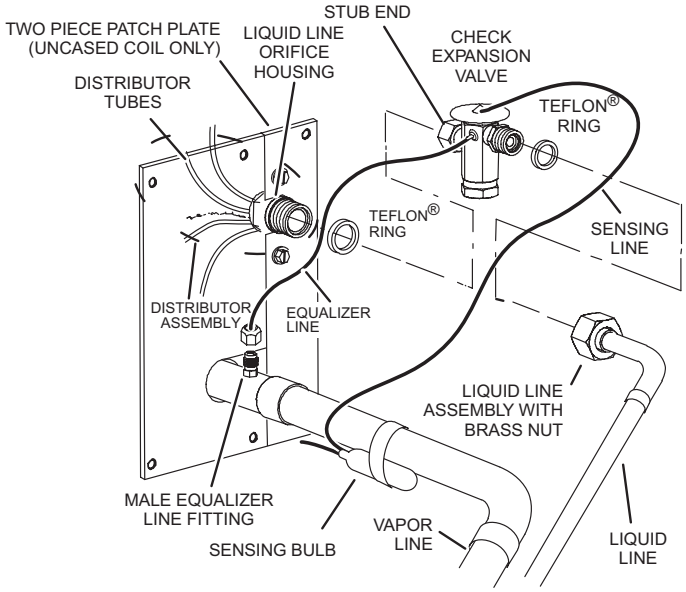

A On fully cased coils, remove the coil access and plumbing panels.

B Remove any shipping clamps holding the liquid line and distributor assembly.

C Disconnect the equalizer line from the check expansion valve equalizer line fitting on the vapor line.

D Remove the vapor line sensing bulb.

E Disconnect the liquid line from the check expansion valve at the liquid line assembly.

F Disconnect the check expansion valve from the liquid line orifice housing. Take care not to twist or damage distributor tubes during this process.

G Remove and discard check expansion valve and the two Teflon® rings.

H Use a field-provided fitting to temporary reconnect the liquid line to the indoor unit's liquid line orifice housing.

2 CONNECT GAUGES AND EQUIPMENT FOR FLUSHING PROCEDURE

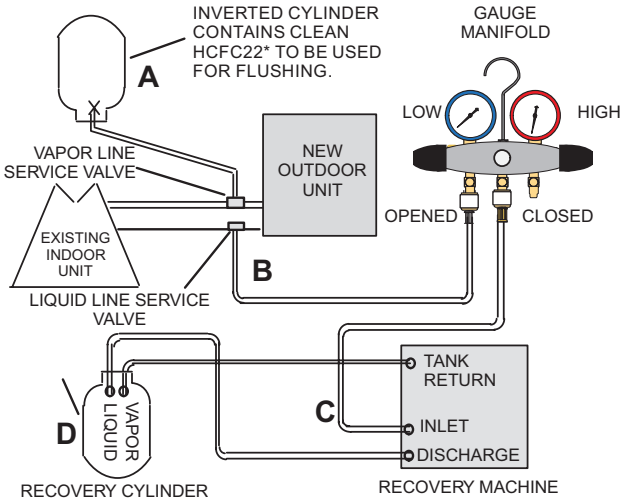

A Inverted HCFC-22 cylinder with clean refrigerant* to the vapor service valve.

B HCFC-22 gauge set (low side) to the liquid line valve.

C HCFC-22 gauge set center port to inlet on the recovery machine with an empty recovery tank to the gauge set.

D Connect recovery tank to recovery machines per machine instructions.

3 FLUSHING LINE SET

The line set and indoor unit coil must be flushed with at least the same amount of clean refrigerant* that previously charged the system. Check the charge in the flushing cylinder before proceeding.

A Set the recovery machine for liquid recovery and start the recovery machine. Open the gauge set valves to allow the recovery machine to pull a vacuum on the existing system line set and indoor unit coil.

B Invert the cylinder of clean HCFC-22* and open its valve to allow liquid refrigerant to flow into the system through the vapor line valve. Allow the refrigerant to pass from the cylinder and through the line set and the indoor unit coil before it enters the recovery machine.

C After all of the liquid refrigerant has been recovered, switch the recovery machine to vapor recovery so that all of the HCFC-22 vapor is recovered. Allow the recovery machine to pull the system down to 0.

D Close the valve on the inverted HCFC-22 drum and the gauge set valves. Pump the remaining refrigerant out of the recovery machine and turn the machine off.

***IMPORTANT - Clean refrigerant is any refrigerant in a system that has not had compressor burn out. If the system has experienced burn out, it is recommended that the existing line set and indoor coil be replaced.**

FIGURE 8. Removing Metering Device and Flushing

Installing Indoor Metering Device

This outdoor unit is designed for use in systems that use a check / expansion valve metering device at the indoor coil.

See the Lennox ML16KP2 Product Specification bulletin for approved expansion valve kit match-ups. The expansion valve unit can be installed internal or external to the indoor coil.

In applications where an uncased coil is being installed in a field-provided plenum, install the expansion valve in a manner that will provide access for field servicing of the expansion valve. Refer to below illustration for reference during installation of expansion valve unit.

INDOOR EXPANSION VALVE INSTALLATION

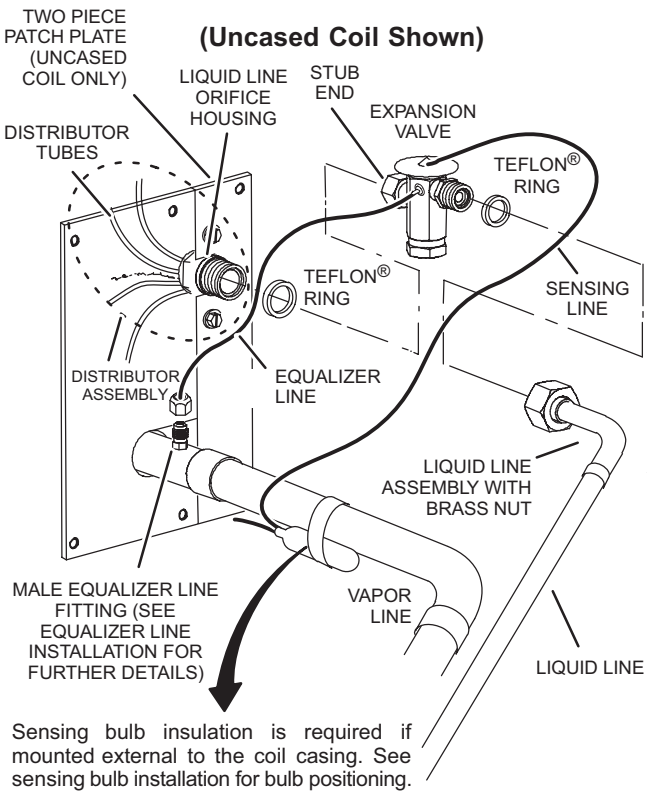

Sensing bulb insulation is required if mounted external to the coil casing. See sensing bulb installation for bulb positioning.

A Remove the field-provided fitting that temporary reconnected the liquid line to the indoor unit's distributor assembly.

B Install one of the provided Teflon® rings around the stubbed end of the expansion valve and lightly lubricate the connector threads and expose surface of the Teflon® ring with refrigerant oil.

C Attach the stubbed end of the expansion valve to the liquid line orifice housing. Finger tighten and use an appropriately sized wrench to turn an additional 1/2 turn clockwise as illustrated in the figure above, or 20 ft-lb.

D Place the remaining Teflon® washer around the other end of the expansion valve. Lightly lubricate connector threads and expose surface of the Teflon® ring with refrigerant oil.

E Attach the liquid line assembly to the expansion valve. Finger tighten and use an appropriately sized wrench to turn an additional 1/2 turn clockwise as illustrated in the figure above or 20 ft-lb.

1/2 Turn

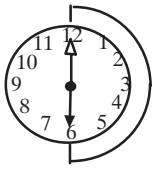

SENSING BULB INSTALLATION

A Attach the vapor line sensing bulb in the proper orientation as illustrated to the right using the clamp and screws provided.

NOTE — Confirm proper thermal contact between vapor line and expansion bulb before insulating the sensing bulb once installed.

B Connect the equalizer line from the expansion valve to the equalizer vapor port on the vapor line. Finger tighten the flare nut plus 1/8 turn (7 ft-lbs) as illustrated below.

1/8 Turn

EQUALIZER LINE INSTALLATION

A Remove and discard either the flare seal cap or flare nut with copper flare seal bonnet from the equalizer line port on the vapor line as illustrated in the figure to the right.

B Remove and discard either the flare seal cap or flare nut with copper flare seal bonnet from the equalizer line port on the vapor line as illustrated in the figure to the right.

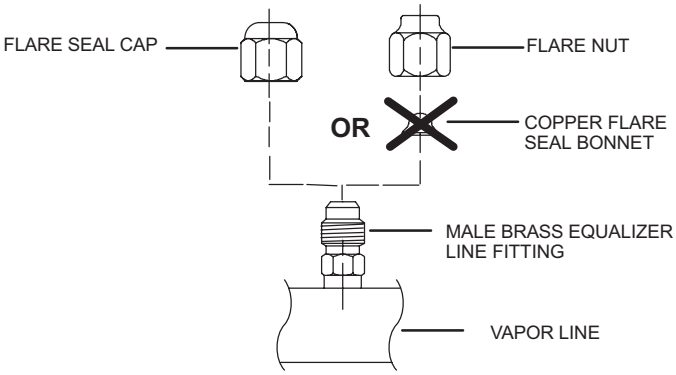

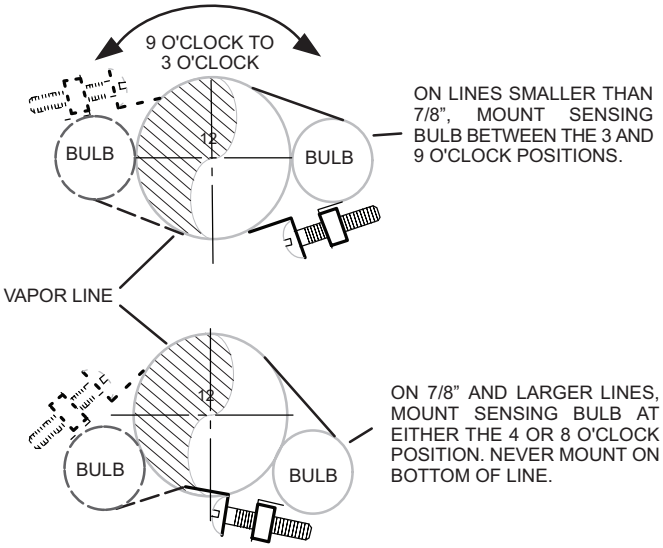

NOTE — NEVER MOUNT ON BOTTOM OF LINE.

FIGURE 9. Installing Indoor Expansion Valve

⚠ IMPORTANT

The Clean Air Act of 1990 bans the intentional venting of refrigerant (CFC's and HCFC's) as of July 1, 1992. Approved methods of recovery, recycling or reclaiming must be followed. Fines and/or incarceration may be levied for non-compliance.

⚠ IMPORTANT

If this unit is being matched with an approved line set or indoor unit coil that was previously charged with mineral oil, or if it is being matched with a coil which was manufactured before January of 1999, the coil and line set must be flushed prior to installation. Take care to empty all existing traps. Polyol ester (POE) oils are used in Lennox units charged with R-454B refrigerant. Residual mineral oil can act as an insulator, preventing proper heat transfer. It can also clog the expansion device and reduce system performance and capacity.

Failure to properly flush the system, per this instruction and the detailed Installation and Service Procedures manual will void the warranty.

Leak Test Line Set and Indoor Coil

⚠ WARNING

When using a high pressure gas such as nitrogen to pressurize a refrigeration or air conditioning system, use a regulator that can control the pressure down to 1 or 2 psig (6.9 to 13.8 kPa).

⚠ IMPORTANT

Leak detector must be capable of sensing HFC refrigerant.

⚠ WARNING

Refrigerant can be harmful if it is inhaled. Refrigerant must be used and recovered responsibly.

Failure to follow this warning may result in personal injury or death.

LEAK TEST

LINE SET AND INDOOR COIL

NOTE *- NORMALLY, THE HIGH PRESSURE HOSE IS CONNECTED TO THE LIQUID LINE PORT. HOWEVER, CONNECTING IT TO THE VAPOR PORT BETTER PROTECTS THE MANIFOLD GAUGE SET FROM HIGH PRESSURE DAMAGE.*

1 CONNECT GAUGE SET

A. CONNECT AN R454B MANIFOLD GAUGE SET HIGH PRESSURE HOSE TO THE VAPOR VALVE SERVICE PORT.

B. WITH BOTH MANIFOLD VALVES CLOSED, CONNECT THE CYLINDER OF R454B REFRIGERANT TO THE CENTER PORT OF THE MANIFOLD GAUGE SET.

NOTE - LATER IN THE PROCEDURE, THE R454B *CONTAINER WILL BE REPLACED BY THE NITROGEN CONTAINER.*

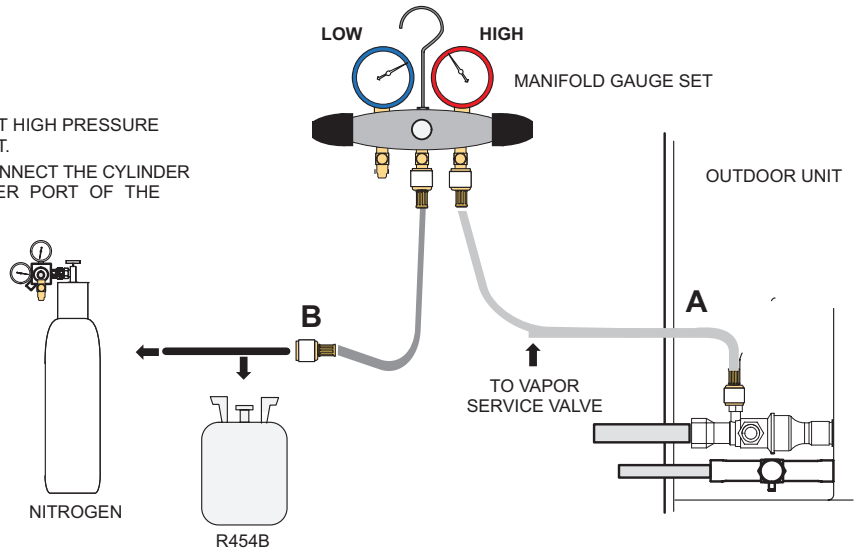

2 TEST FOR LEAKS

AFTER THE LINE SET HAS BEEN CONNECTED TO THE INDOOR AND OUTDOOR UNITS, CHECK THE LINE SET CONNECTIONS AND INDOOR UNIT FOR LEAKS. USE THE FOLLOWING PROCEDURE TO TEST FOR LEAKS:

A. WITH BOTH MANIFOLD VALVES CLOSED, CONNECT THE CYLINDER OF R454B REFRIGERANT TO THE CENTER PORT OF THE MANIFOLD GAUGE SET. OPEN THE VALVE ON THE R454B CYLINDER (VAPOR ONLY).

B. OPEN THE HIGH PRESSURE SIDE OF THE MANIFOLD TO ALLOW R454B INTO THE LINE SET AND INDOOR UNIT. WEIGH IN A TRACE AMOUNT OF R454B *[A TRACE AMOUNT IS A MAXIMUM OF TWO OUNCES (57 G) REFRIGERANT OR THREE POUNDS (31 KPA) PRESSURE]*. CLOSE THE VALVE ON THE R454B CYLINDER AND THE VALVE ON THE HIGH PRESSURE SIDE OF THE MANIFOLD GAUGE SET. DISCONNECT THE R454B CYLINDER.

C. CONNECT A CYLINDER OF DRY NITROGEN WITH A PRESSURE REGULATING VALVE TO THE CENTER PORT OF THE MANIFOLD GAUGE SET.

D. ADJUST DRY NITROGEN PRESSURE TO 150 PSIG (1034 KPA). OPEN THE VALVE ON THE HIGH SIDE OF THE MANIFOLD GAUGE SET IN ORDER TO PRESSURIZE THE LINE SET AND THE INDOOR UNIT.

E. AFTER A FEW MINUTES, OPEN ONE OF THE SERVICE VALVE PORTS AND VERIFY THAT THE REFRIGERANT ADDED TO THE SYSTEM EARLIER IS MEASURABLE WITH A LEAK DETECTOR.

F. AFTER LEAK TESTING, DISCONNECT GAUGES FROM SERVICE PORTS.

FIGURE 10. Leak Test

Evacuating Line Set and Indoor Coil

1 CONNECT GAUGE SET

NOTE — Remove cores from service valves (if not already done).

A Connect low side of manifold gauge set with 1/4 SAE in-line tee to *vapor* line service valve

B Connect high side of manifold gauge set to *liquid* line service valve

C Connect micron gauge available connector on the 1/4 SAE in-line tee.

D Connect the vacuum pump (with vacuum gauge) to the center port of the manifold gauge set. The center port line will be used later for both the R454B and nitrogen containers.

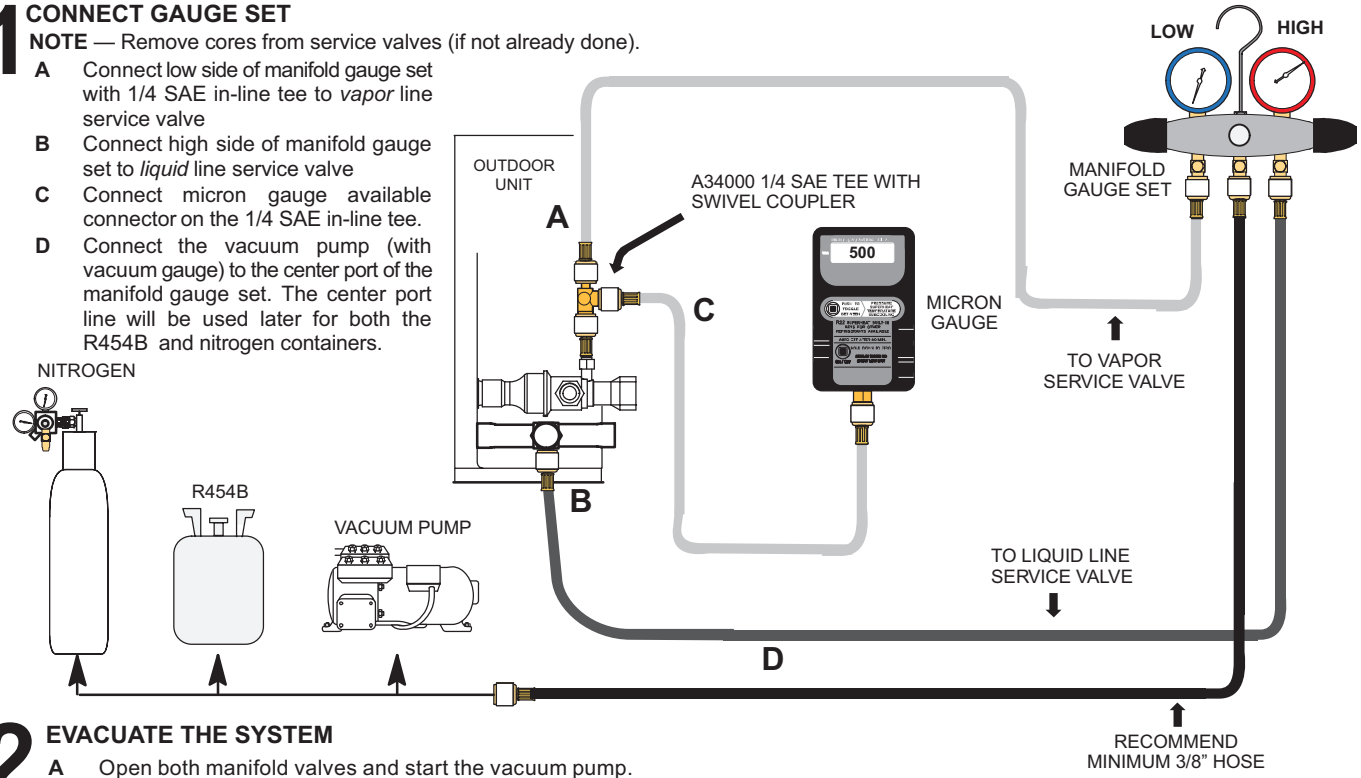

2 EVACUATE THE SYSTEM

A Open both manifold valves and start the vacuum pump.

B Evacuate the line set and indoor unit to an **absolute pressure** of 23,000 microns (29.01 inches of mercury).

***NOTE** — During the early stages of evacuation, it is desirable to close the manifold gauge valve at least once. A rapid rise in pressure indicates a relatively large leak. If this occurs, **repeat the leak testing procedure**.*

***NOTE** — The term **absolute pressure** means the total actual pressure within a given volume or system, above the absolute zero of pressure. Absolute pressure in a vacuum is equal to atmospheric pressure minus vacuum pressure.*

C When the absolute pressure reaches 23,000 microns (29.01 inches of mercury), perform the following:

- Close manifold gauge valves
- Close valve on vacuum pump
- Turn off vacuum pump
- Disconnect manifold gauge center port hose from vacuum pump
- Attach manifold center port hose to a dry nitrogen cylinder with pressure regulator set to 150 psig (1034 kPa) and purge the hose.
- Open manifold gauge valves to break the vacuum in the line set and indoor unit.
- Close manifold gauge valves.

D Shut off the dry nitrogen cylinder and remove the manifold gauge hose from the cylinder. Open the manifold gauge valves to release the dry nitrogen from the line set and indoor unit.

E Reconnect the manifold gauge to the vacuum pump, turn the pump on, and continue to evacuate the line set and indoor unit until the absolute pressure does not rise above 500 microns (29.9 inches of mercury) within a 20-minute period after shutting off the vacuum pump and closing the manifold gauge valves.

F When the absolute pressure requirement above has been met, disconnect the manifold hose from the vacuum pump and connect it to an upright cylinder of R454B refrigerant. Open the manifold gauge valve 1 to 2 psig in order to release the vacuum in the line set and indoor unit.

G Perform the following:

- Close manifold gauge valves.
- Shut off R454B cylinder.
- Reinstall service valve cores by removing manifold hose from service valve. Quickly install cores with core tool while maintaining a positive system pressure.
- Replace stem caps and secure finger tight, then tighten an additional one-sixth (1/6) of a turn as illustrated.

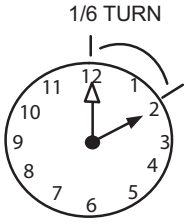

FIGURE 11. Evacuating the System

⚠ IMPORTANT

Use a thermocouple or thermistor electronic vacuum gauge that is calibrated in microns. Use an instrument capable of accurately measuring down to 50 microns.

⚠ WARNING

Possible equipment damage.

Avoid deep vacuum operation. Do not use compressors to evacuate a system. Extremely low vacuum can cause internal arcing and compressor failure. Damage caused by deep vacuum operation will void warranty.

Evacuating the system of non-condensables is critical for proper operation of the unit. Non-condensables are defined as any gas that will not condense under temperatures and pressures present during operation of an air conditioning system. Non-condensables and water suction combine with refrigerant to produce substances that corrode copper piping and compressor parts.

Electrical

In the U.S.A., wiring must conform with current local codes and the current National Electric Code (NEC). In Canada, wiring must conform with current local codes and the current Canadian Electrical Code (CEC).

Refer to the furnace or air handler installation instructions for additional wiring application diagrams and refer to unit nameplate for minimum circuit ampacity and maximum overcurrent protection size.

24VAC TRANSFORMER

Use the transformer provided with the furnace or air handler for low-voltage control power (24VAC - 40 VA minimum).

⚠ WARNING

Electric Shock Hazard. Can cause injury or death. Unit must be properly grounded in accordance with national and local codes.

Line voltage is present at all components when unit is not in operation on units with single-pole contactors. Disconnect all remote electric power supplies before opening access panel. Unit may have multiple power supplies.

SIZE CIRCUIT AND INSTALL SERVICE DISCONNECT SWITCH

Refer to the unit nameplate for minimum circuit ampacity, and maximum fuse or circuit breaker (HACR per NEC). Install power wiring and properly sized disconnect switch.

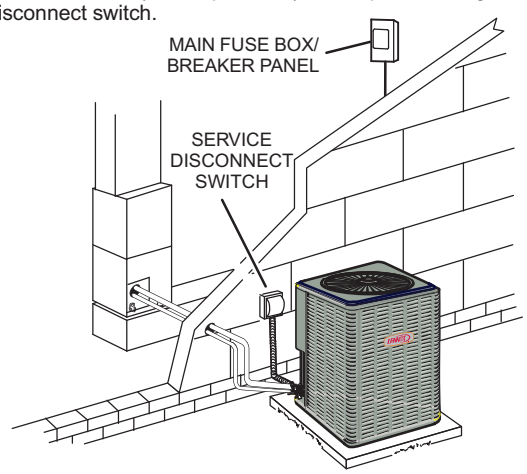

NOTE — Units are approved for use only with copper conductors. Ground unit at disconnect switch or to an earth ground.

INSTALL THERMOSTAT

Install room thermostat (ordered separately) on an inside wall approximately in the center of the conditioned area and 5 feet (1.5m) from the floor. It should not be installed on an outside wall or where it can be affected by sunlight or drafts.

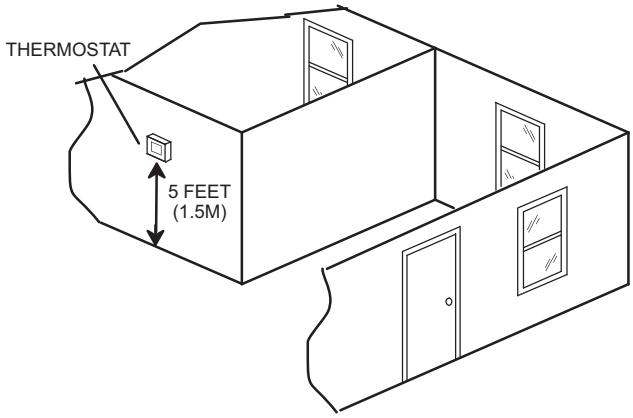

NOTE — 24VAC, Class II circuit connections are made in the control panel.

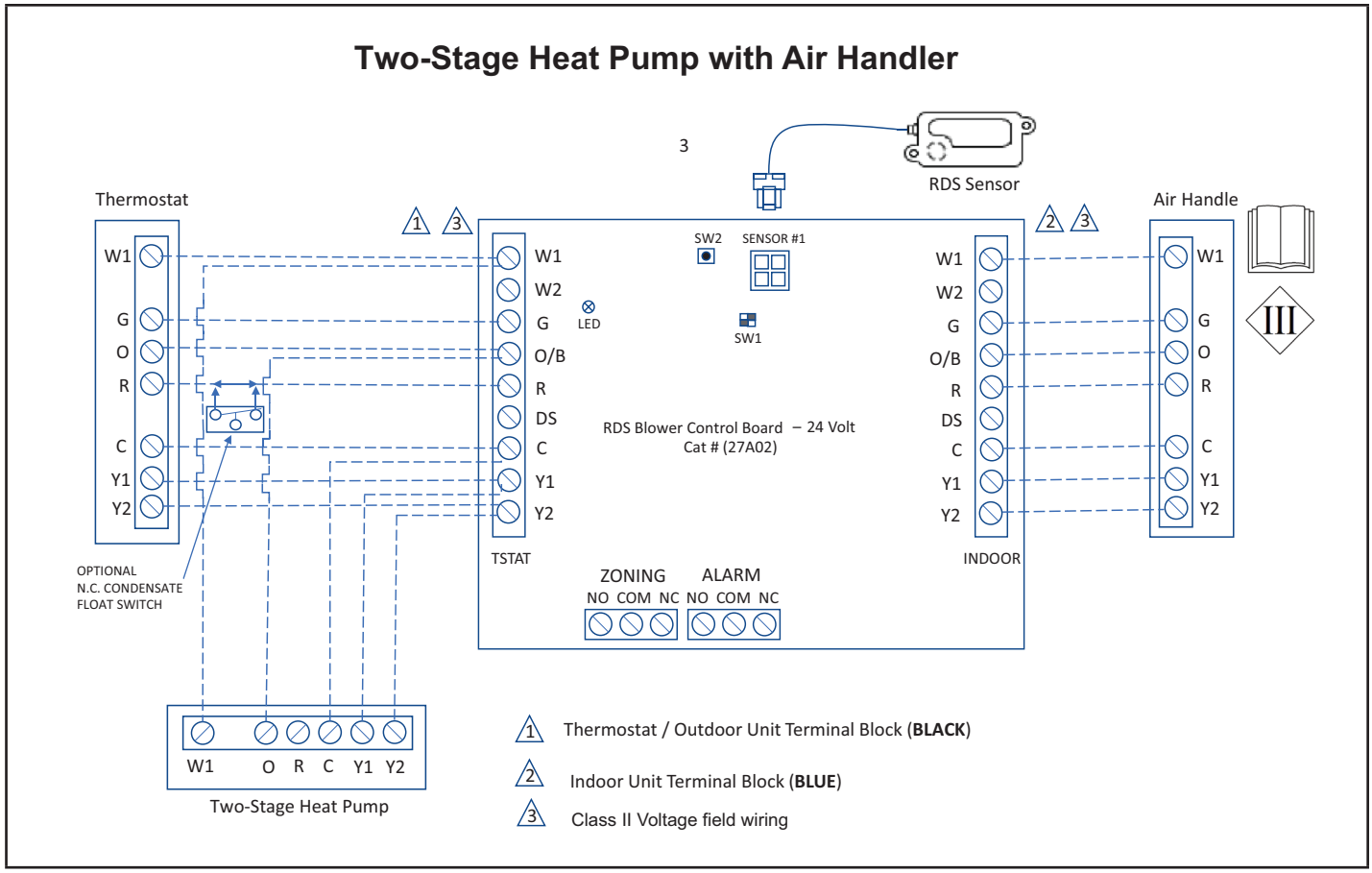

FIGURE 12. ML16KP2 Heat Pump with CBK45 -71 AHU with Factory Installed RDS Control Field Wiring Diagram

System Operation

UNIT COMPONENTS

⚠ IMPORTANT

Some scroll compressors have an internal vacuum protector that will unload scrolls when suction pressure goes below 20 psig. A hissing sound will be heard when the compressor is running unloaded. Protector will reset when low pressure in system rises above 40 psig. DO NOT REPLACE COMPRESSOR.

The outdoor unit and indoor blower cycle on demand from the room thermostat. If the thermostat blower switch is in the **ON** position, the indoor blower operates continuously.

Bi-Flow Liquid line Filter Drier

The unit is equipped with a large-capacity bi-flow filter drier which keeps the system clean and dry. If replacement is necessary, order another of the same design and capacity. The replacement filter drier must be suitable for use with R-454B refrigerant.

Low Pressure Switch (S87)

The ML16KP2 is equipped with an auto-reset low pressure switch which is located on the vapor line. The switch shuts off the compressor when the vapor pressure falls below the factory setting. This switch, which is ignored during defrost operation, closes at pressures at or above 40 ± 5 psig (276 ± 34 kPa) and opens at 25 ± 5 psig (172 ± 34 kPa). It is not adjustable.

High Pressure Switch (S4)

The ML16KP2 is equipped with an auto-reset high pressure switch (single-pole, single-throw) which is located on the liquid line. The switch shuts off the compressor when discharge pressure rises above the factory setting. The switch is normally closed and is permanently adjusted to trip (open) at 590 ± 15 psig (4068 ± 103 kPa).

Crankcase Heater (HR1)

Certain units are equipped with a belly band type crankcase heater. HR1 prevents liquid from accumulating in the compressor. The HR1 is controlled by a thermostat switch integrated into the heater. On all units, the heater is on when there is no compressor operation. Thermostat switch closes at 45°F and opens at 65°F.

Charging

Verify the unit is electrically grounded before charging the system. Extreme care shall be taken not to overfill the refrigerating system.

Charge should be checked and adjusted using information outlined in this section and in the tables provided on the charging label on the unit's control access panel.

R454B is a zeotropic blend of two refrigerants. At any given refrigerant pressure, R454B will have two saturation temperatures, a saturated liquid temperature and a saturated vapor temperature. See R454B Refrigerant Pressure Temperature Chart in the installation and service manual for saturation temperatures.

R454B Units must be charged with liquid refrigerant. Follow conventional charging procedures when charging the system. The technician is required to mark the total charge of the installed system on the unit nameplate, which includes the nameplate charge (factory charge) and additional charge that is added to the system at the time of installation.

The R454B refrigerant cylinders are provided with a ¼" LH flare connection, therefore a ¼" LH female flare adapter will be required. Connect manifold gauges and hoses following conventional charging procedures. Position the R454B refrigerant cylinder to deliver liquid refrigerant.

ML16KP2 unit is factory charged with R454B. Refer to unit Charging Label for baseline line set length for factory unit charge and Additional Charge guidelines.

Initiate a call for cooling and allow the refrigerant pressures and temperatures to stabilize. Adjust the charge to using the subcooling method. The unit charging label provides the target Subcooling Values. Record the liquid line temperature. Measure the liquid line pressure and use the value to determine the Saturated Liquid Temperature. Calculate subcooling by subtracting the liquid line temperature from the Saturated liquid temperature.

Subcooling = Saturated Liquid Temperature – Liquid Line Temperature

Compare the results with the unit charging label.

Once system charging has been completed, the additional charge and total charge must be marked on the unit nameplate. Total Charge = Factory Charge + Additional charge. The total charge is marked on the space adjacent to "Total Charge". See nameplate below.

Detailed information is given in the ML16KP2 Installation and Service Procedures manual, which is available on LennoxPros.com.

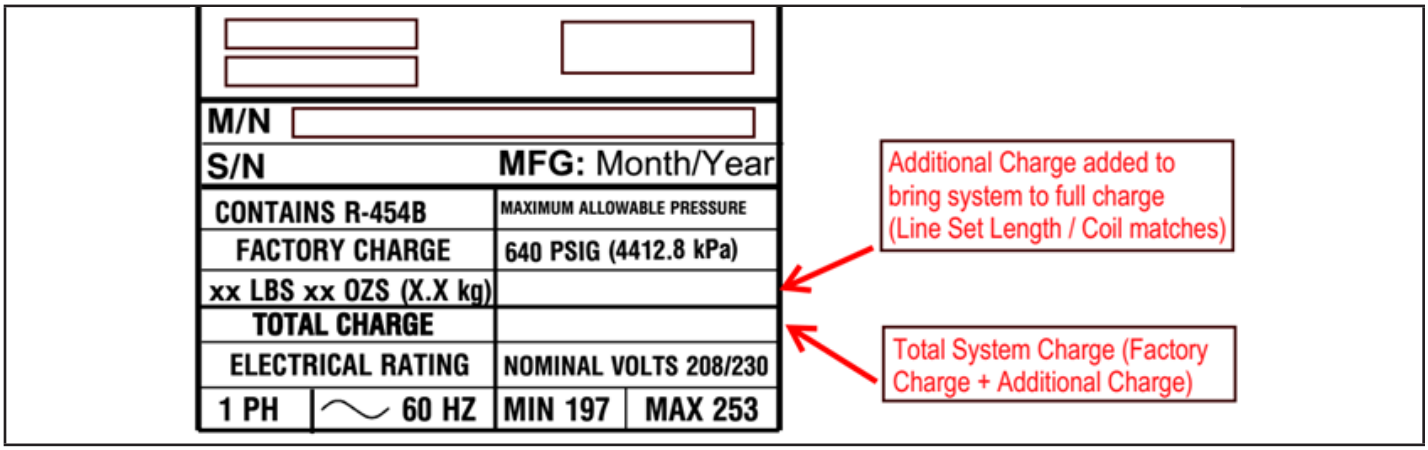

(NOTE - The nameplate is shown for illustration purposes only. Go to actual nameplate on outdoor unit for charge information.)

System Configuration

Demand Defrost Control (A108)

The demand defrost control measures differential temperatures to detect when the system is performing poorly because of ice build-up on the outdoor coil. The control *self-calibrates* when the defrost system starts and after each system defrost cycle. The demand defrost control components are shown in figure 14.

- Demand defrost control connections, jumpers and LED locations are shown in figure 14.
- Demand defrost control connections, jumpers and LED descriptions are listed on table 3.
- Demand defrost control status, fault and lockout LEDs are listed in table 4.

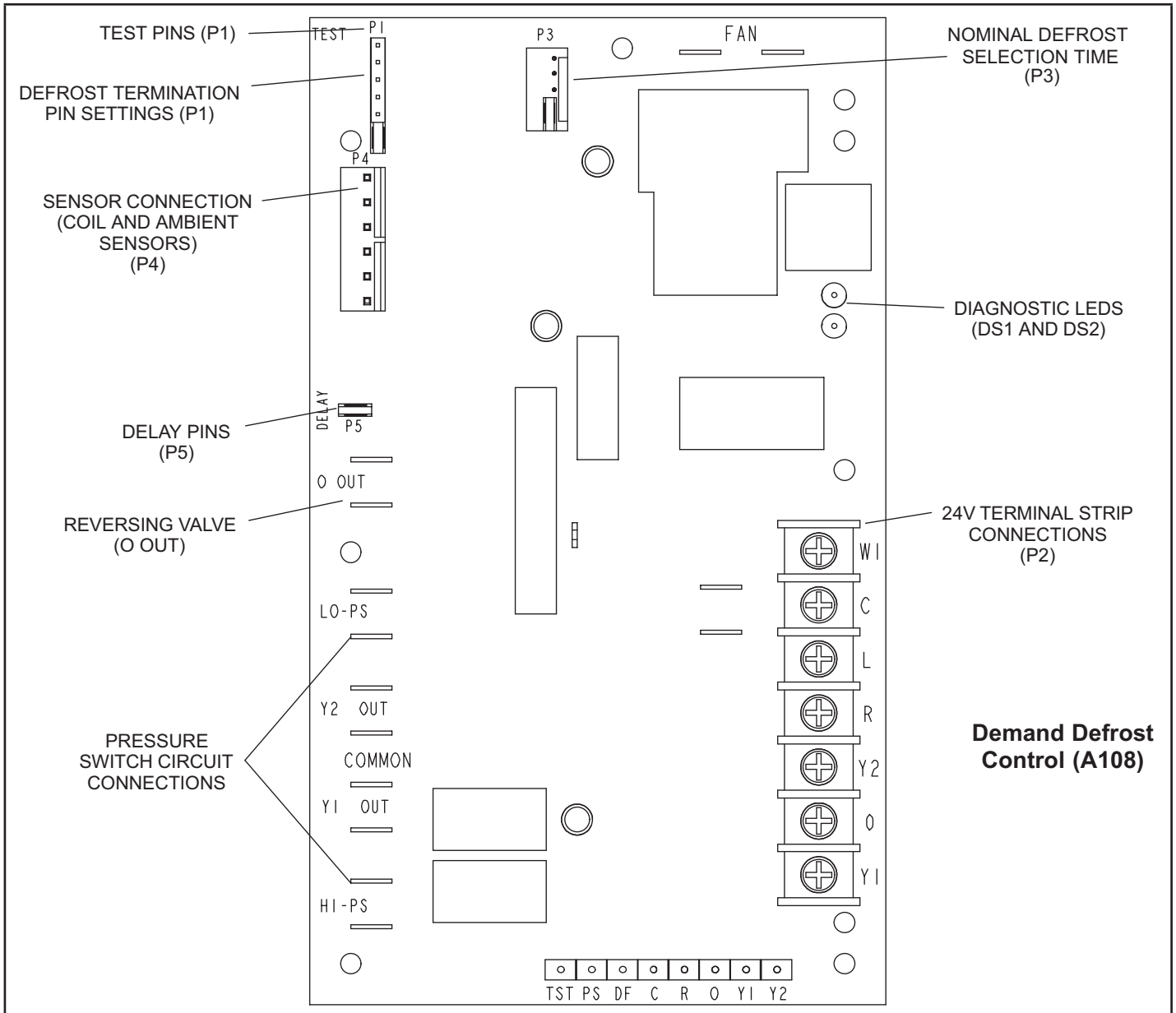

Note - Component locations vary by board manufacturer.

FIGURE 13. Demand Defrost Control (A108)

TABLE 3
DEMAND DEFROST CONTROL (A108) INPUTS, OUTPUTS AND CONFIGURABLE SETTINGS

Control Location	Control Label or Description	Purpose	Function
P1	50, 70, 90, 100	Defrost Temperature Termination Shunt (Jumper)Pins	The demand defrost control (illustrated in figure 17) has selections which are: 50, 70, 90, and 100°F (10, 21, 32 and 38°C). The shunt termination pin is factory-set at 50°F (10°C). If the temperature shunt is not installed, the default termination temperature is 90°F (32°C).
P2	W1	24VAC Thermostat Input / Output	24VAC input / output from indoor thermostat to indoor unit.
	C	24VAC Common	24VAC common.
	L	Thermostat Service Light	Thermostat service light connection.
	R	24VAC	24VAC.
	Y2	Thermostat Input	Controls the operation of the unit.
	O	Thermostat Input	Reversing valve solenoid.
	Y1	Thermostat Input	Controls the operation of the unit.
P3	165, 140, 100, 60	Nominal defrost time selection	The nominal defrost time selection input is provided by the position of a selection shunt on the 0.100" P3 header. Options are 165, 140, 100 and 60 seconds. Default setting is 140 seconds.
P4	DIS-YEL	Coil Sensor	(P4-5) Ground connection for outdoor coil temperature sensor. (P4-6) Connection for outdoor coil temperature sensor.
	AMB-BLACK	Ambient Sensor	(P4-3) Ground connection for outdoor ambient temperature sensor. (P4-4) Connection for outdoor ambient temperature sensor.
	COIL-BROWN	Discharge Sensor	*No discharge sensor is used; replaced by 10K resistor.*
P5	DELAY	Delay Mode	The demand defrost control has a field-selectable function to reduce occasional sounds that may occur while the unit is cycling in and out of the defrost mode. When a jumper is installed on the DELAY pins, the compressor will be cycled off for 30 seconds going in and out of the defrost mode. Units are shipped with jumper installed on DELAY pins. ***NOTE** - The 30-second off cycle is functional when TEST pins on P1 are jumpered.*
P6	TST, PS DF, C, R, O, Y1, Y2	Factory Test Connectors	No field use.
DS1	RED LED	Diagnostic LED	Demand defrost control LEDs may be OFF, ON, or FLASHING to indicate diagnostic conditions which are described in table 3.
DS2	GREEN LED		
FAN	TWO CONNECTORS	Condensor Fan Operation	These two connections provide power for the condenser fan.
O OUT	O OUT	24VAC output	24 VAC output connection for reversing valve.
LO-PS	LO-PS	Low-Pressure Switch	When the low pressure switch trips, the demand defrost control will cycle off the compressor, and the strike counter in the demand defrost control will count one strike. The low pressure switch is ignored under the following conditions: • during the defrost cycle and 90 seconds after the termination of defrost • When ambient temperature is below 15°F, the Low pressure switch is ignored for 10 minutes during compressor operation before allowing the pressure switch to de-energize the compressor. • during 90 seconds following the start of the compressor during TEST mode.
Y2 OUT	Y2 OUT	24VAC Output	24 VAC output for second-stage compressor solenoid.
Y1 OUT	Y1 OUT	24VAC Output	24 VAC common output, switched for enabling compressor contactor.
HS-PS	HS-PS	High-Pressure Switch	When the high pressure switch trips, the demand defrost control will cycle off the compressor, and the strike counter in the demand defrost control will count one strike.
L	L	Service Light output	24VAC service light output.
24V	24V	24V output	24VAC typically used to supply power to the Lennox System Operation Monitor (LSOM). Not used in this system.

Defrost System

This section addresses:

- Emergency Heat
- Defrost System Overview
- Defrost Control Connections, Jumper Settings and Features
- Operational Mode Overview (Calibration, Normal and Defrost)
- Defrost Cycle Actuation

EMERGENCY HEAT (AMBER LIGHT)

An emergency heat function is designed into some room thermostats. This feature is applicable when isolation of the outdoor unit is required, or when auxiliary electric heat is staged by outdoor thermostats. When the room thermostat is placed in the emergency heat position, the outdoor unit control circuit is isolated from power and field-provided relays bypass the outdoor thermostats. An amber indicating light simultaneously comes on to remind the homeowner that he is operating in the emergency heat mode.

Emergency heat is usually used during an outdoor unit shutdown, but it should also be used following a power outage if power has been off for over an hour and the outdoor temperature is below 50°F (10°C). System should be left in the emergency heat mode at least six hours to allow the crankcase heater sufficient time to prevent compressor slugging.

DEFROST SYSTEM OVERVIEW

The control monitors ambient temperature, outdoor coil temperature, and total run time to determine when a defrost cycle is required. The coil temperature probe is designed with a spring clip and is mounted between the outlet of the TXV and the distributor. See coil sensor location on page 11, figure 1 Typical Plumbing Location arrangement drawing. The location of the coil sensor is important for proper defrost operation.

NOTE *– The demand defrost control accurately measures the performance of the system as frost accumulates on the outdoor coil. This typically will translate into longer running time between defrost cycles as more frost accumulates on the outdoor coil before the demand defrost control initiates defrost cycles.*

Demand Defrost Operation

The defrost control uses a time-dependent frost accumulation duration demand defrost control algorithm to provide a demand defrost when the system falls below optimum levels. The demand defrost control algorithm is reactive based upon the previous heat pump run time between defrost cycles (frost accumulation time) and the time spend in defrost (nominal defrost time). The defrost control monitors ambient temperature, outdoor coil temperature along with the compressor run time in heating mode and defrost cycle time.

The outdoor unit control monitors compressor run time in the heating mode when the outdoor coil temperature is below 37°F and accumulates the frost accumulation time. Once the frost accumulation time is met the unit control will initiate a defrost cycle.

The unit will run in the defrost mode until the coil temperature reaches the defrost termination temperature setpoint. The maximum length of defrost cycle is 14 minutes and the defrost cycle will automatically be terminated if the defrost cycle exceeds 14 minutes.

Two consecutive low pressure switch trips while operating in the heat pump heating mode will initiate a defrost cycle to defrost that may occur during a weather related event such as freezing rain.

Frost Accumulation Time

The frost accumulation time is the amount of time the heat pump runs in the heating mode when the outdoor coil temperature is below 37°F. The initial target frost accumulation time is 90 minutes, but the control will adjust the frost accumulation time higher or lower based upon the previous defrost cycle time history. If the defrost cycle time is short (70% or less of the defrost cycle time) the defrost accumulation time will be increased by 30 minutes. If the defrost cycle time is long (130% or more of the target defrost cycle time) the defrost accumulation time will be decreased by 30 minutes. If the defrost accumulation time is significantly longer (200% or more of the target defrost cycle time) or if the defrost terminates at the 14-minute maximum time, the frost accumulation time is set to 30 minutes. No change is he frost accumulation time is made if the frost accumulation time is close to the target defrost cycle time (between 70% and 130% of the target defrost cycle time).The defrost cycle time is counted from the time the reversing valve is energized until the defrost termination temperature reaches 50°F. The defrost termination tempeature jumper setting does not affect the defrost cycle time.

Cold Climate Defrost

When the outdoor temperature is below 10°F, the frost accumulation time is set to 360 minutes to reduce the frequency of the defrost cycle to increase the system efficiency. When the outdoor temperture is less the 10 degrees, there is less moisture in the air and defrost frequency can be reduced. The defrost cycle resumes normal operation when the outdoor temperature rises above 15°F and the frost acumulation time is reset to 90 minutes.

NOTE *– Colder climates may require a higher defrost termination temperature setting to ensure the outdoor coil is cleared of frost during defrost. If the outdoor coil is not adequately cleared of frost, the heat pump may experience reduced heating performance or damage to the outdoor coil from the buildup of ice on the coil.*

DEFROST CONTROL CONNECTIONS, JUMPERS SETTINGS AND FEATURES

Defrost Temperature Termination Jumper Settings (P1)

The demand defrost control selections are: 50, 70, 90 and 100°F (10, 21, 32 and 38°C). The shunt termination pin is factory set at 50°F (10°C). If temperature shunt is not installed, default termination temperature is 90°F (32°C).

Test Pins (P1) Function

Placing the jumper on the field test pins (P1) allows the technician to:

- Clear short cycle lockout
- Clear five-strike fault lockout
- Cycle the unit in and out of defrost mode

Place the unit in defrost mode to clear the coil

Nominal Defrost Time Selection Input (P3)

The nominal defrost time selection input is provided by the position of a selection shunt on the 0.100” P3 header. If the nominal defrost time shunt is not installed, the default nominal defrost time shall be 140 seconds. The control shall be provided from the factory with the shunt installed in the 140 position. The nominal defrost time selection is used as the value for the Nom_def_time variable.

Position Definitions for P3 Header:

- Connecting P3-1 and P3-2 will set the nominal defrost time to 140 seconds.
- Connecting P3-2 and P3-3 will set the nominal defrost time to 100 seconds.
- Connecting P3-3 and P3-4 will set the nominal defrost time to 60 seconds.
- Connecting P3-4 and P3-5 will set the nominal defrost time to 165 seconds.

Compressor Delay Mode (P5)

The demand defrost control has a field-selectable function to reduce occasional sounds that may occur while the unit is cycling in and out of the defrost mode. When a jumper is installed on the **DELAY** pins, the compressor will be cycled off for 30 seconds going in and out of the defrost mode. Units are shipped with jumper installed on **DELAY** pins.

NOTE *- The 30 second off cycle is NOT functional when jumpering the TEST pins.*

DEMAND DEFROST CONTROL (A108) DIAGNOSTIC LEDS

The state (Off, On, Flashing) of two LEDs on the demand defrost control (DS1 [Red] and DS2 [Green]) indicate diagnostics conditions that are described in table 4.

TABLE 4
COMPRESSOR TROUBLESHOOTING

Model	Compressor	Start Winding Resistance (ohms)	Run Winding Resistance (ohms)	Solenoid Coil Resistance (ohms)
ML16KP2-024	YAS20K1E-PFV-ASE	1.065 Ω	1.652 Ω	1440-1760 Ω
ML16KP2-036	YAS31K1E-PFV-ASE	0.728 Ω	1.471 Ω	1440-1760 Ω
ML16KP2-048	YAS40K1E-PFV-ASE	0.436 Ω	1.66 Ω	1440-1760 Ω
MI16KP2-060	YAS51K1E-PFV-ASE	0.349 Ω	1.394 Ω	1440-1760 Ω

TABLE 5
DEMAND DEFROST CONTROL (A108) DIAGNOSTIC LEDS

DS1 and DS2 System Status, Fault and Lockout Codes					
DS2 Green	**DS1 Green**	**Type**	**Condition / Code**	**Possible Cause(s)**	**Solution**
OFF	OFF	Status	Power problem	No power (24V) to demand defrost control terminals R and C or demand defrost control failure.	
Simultaneous SLOW Flash		Status	Normal operation	Unit operating normally or in standby mode.	None required.
Alternating SLOW Flash		Status	5-minute anti-short cycle delay	Initial power up, safety trip, end of room thermostat demand.	None required (jumper TEST pins to override)
Simultaneous FAST Flash		Fault	Ambient Sensor Problem	Sensor being detected open or shorted or out of temperature range. Demand defrost control will revert to time/temperature defrost operation. (System will still heat or cool).	
Alternating FAST Flash		Fault	Coil Sensor Problem	Sensor being detected open or shorted or out of temperature range. Demand defrost control will not perform demand or time/ temperature defrost operation. (System will still heat or cool.)	
ON	ON	Fault	Demand Defrost Control Failure	Indicates that demand defrost control has internal component failure. Cycle 24VAC power to demand defrost control. If code does not clear, replace demand defrost control.	
OFF	SLOW Flash	Fault	Low Pressure Failure	• Restricted air flow over indoor or outdoor coil. • Improper refrigerant charge in system. • Improper metering device installed or incorrect operation of metering device. • Incorrect or improper sensor location or connection to system.	• Remove any blockages or restrictions from coils and/ or fans. Check indoor and outdoor fan motor for proper current draws. • Check system charge using subcooling method. • Check system operating pressures and compare to unit subcooling tables in this instruction or located on unit access panel. • Make sure all pressure switches and sensors have secure connections to system to prevent refrigerant leaks or errors in
OFF	ON	Lockout	Low Pressure Lockout		
SLOW Flash	OFF	Fault	High Pressure Fault		
ON	OFF	Lockout	High Pressure Lockout		
SLOW Flash	ON	Fault	Discharge Line Temperature Fault	The ML16KP2 has a 10K resistor installed on the discharge sensor connections. The high discharge temperature code should not occur. If this code occurs, check for a shorted resistor on discharge sensor connection. During compressor operation, the demand defrost control will de-energize the compressor contactor output (and the defrost output if active).	
FAST Flash	ON	Lockout	Discharge Line Temperature Lockout		
OFF	Fast Flash	Fault	Discharge Sensor Fault	The ML16KP2 has a 10K resistor installed on the discharge sensor connections. The discharge sensor fault is detected if the 10k resistor is open resistor on the discharge sensor connections. If this code occurs check for a open resistor on discharge sensor connection. If the sensor resistance is not within range after 90 seconds, the demand defrost one fault. After 5 faults, the demand defrost control will lock out.	
Fast Flash	OFF	Lockout	Discharge Sensor Lockout		

(Each fault adds 1 strike to that code's counter; 5 strikes per code = LOCKOUT)

⚠ IMPORTANT

After testing has been completed, properly reposition test jumper across desired timing pins

Maintenance

DEALER

⚠ WARNING

Electric Shock Hazard. Can cause injury or death. Unit must be properly grounded in accordance with national and local codes.

Line voltage is present at all components when unit is not in operation on units with single-pole contactors. Disconnect all remote electric power supplies before opening access panel. Unit may have multiple power supplies.

⚠ WARNING

Improper installation, adjustment, alteration, service or maintenance can cause property damage, personal injury or loss of life. Installation and service must be performed by a licensed professional HVAC installer or equivalent, service agency, or the gas supplier.

NOTICE !

Failure to follow instructions will cause damage to the unit.

This unit is equipped with an aluminum coil. Aluminum coils may be damaged by exposure to solutions with a pH below 5 or above 9. The aluminum coil should be cleaned using potable water at a moderate pressure (less than 50psi). If the coil cannot be cleaned using water alone, Lennox recommends use of a coil cleaner with a pH in the range of 5 to 9. The coil must be rinsed thoroughly after cleaning.

In coastal areas, the coil should be cleaned with potable water several times per year to avoid corrosive buildup (salt).

Maintenance and service must be performed by a qualified installer or service agency. At the beginning of each cooling season, the system should be checked as follows:

Outdoor Unit

1 - Clean and inspect outdoor coil (may be flushed with a water hose). Ensure power is off before cleaning.

2 - Outdoor unit fan motor is pre-lubricated and sealed. No further lubrication is needed.

3 - Visually inspect all connecting lines, joints and coils for evidence of oil leaks.

4 - Check all wiring for loose connections.

5 - Check for correct voltage at unit (unit operating).

6 - Check amp draw on outdoor fan motor.

Motor Nameplate:_____ Actual:_____.

7 - Inspect drain holes in coil compartment base and clean if necessary.

***NOTE** – If insufficient heating or cooling occurs, the unit should be gauged and refrigerant charge should be checked.*

Outdoor Coil

It may be necessary to flush the outdoor coil more frequently if it is exposed to substances which are corrosive or which block airflow across the coil (e.g., pet urine, cottonwood seeds, fertilizers, fluids that may contain high levels of corrosive chemicals such as salts)

- Outdoor Coil – The outdoor coil may be flushed with a water hose.
- Outdoor Coil (Sea Coast) – Moist air in ocean locations can carry salt, which is corrosive to most metal. Units that are located near the ocean require frequent inspections and maintenance. These inspections will determine the necessary need to wash the unit including the outdoor coil. Consult your installing contractor for proper intervals/procedures for your geographic area or service contract.

Indoor Unit

1. Clean or change filters.

2. Lennox blower motors are prelubricated and permanently sealed. No more lubrication is needed.

3. Adjust blower speed for cooling. Measure the pressure drop over the coil to determine the correct blower CFM. Refer to the unit information service manual for pressure drop tables and procedure.

4. Belt Drive Blowers - Check belt for wear and proper tension.

5. Check all wiring for loose connections.

6. Check for correct voltage at unit. (blower operating)

7. Check amp draw on blower motor.

Motor Nameplate:_____ Actual:_____.

Indoor Coil

1 - Clean coil if necessary.

2 - Check connecting lines, joints and coil for evidence of oil leaks.

3 - Check condensate line and clean if necessary.

HOMEOWNER

Cleaning of the outdoor unit's coil should be performed by a trained service technician. Contact your dealer and set up a schedule (preferably twice a year, but at least once a year) to inspect and service your outdoor unit. The following maintenance may be performed by the homeowner.

⚠ IMPORTANT

Sprinklers and soaker hoses should not be installed where they could cause prolonged exposure to the outdoor unit by treated water. Prolonged exposure of the unit to treated water (i.e., sprinkler systems, soakers, waste water, etc.) will corrode the surface of the steel and aluminum parts, diminish performance and affect longevity of the unit.

Outdoor Coil

The outdoor unit must be properly maintained to ensure its proper operation.

- Please contact your dealer to schedule proper inspection and maintenance for your equipment.
- Make sure no obstructions restrict airflow to the outdoor unit.
- Grass clippings, leaves, or shrubs crowding the unit can cause the unit to work harder and use more energy.
- Keep shrubbery trimmed away from the unit and periodically check for debris which collects around the unit.

Routine Maintenance

In order to ensure peak performance, your system must be properly maintained. Clogged filters and blocked airflow prevent your unit from operating at its most efficient level.

1 - **Air Filter** – Ask your Lennox dealer to show you where your indoor unit's filter is located. It will be either at the indoor unit (installed internal or external to the cabinet) or behind a return air grille in the wall or ceiling. Check the filter monthly and clean or replace it as needed.

2 - **Disposable Filter** – Disposable filters should be replaced with a filter of the same type and size.

***NOTE** – If you are unsure about the filter required for your system, call your Lennox dealer for assistance.*

3 - **Reusable Filter** – Many indoor units are equipped with reusable foam filters. Clean foam filters with a mild soap and water solution; rinse thoroughly; allow filter to dry completely before returning it to the unit or grille.

***NOTE** – The filter and all access panels must be in place any time the unit is in operation.*

4 - **Electronic Air Cleaner** – Some systems are equipped with an electronic air cleaner, designed to remove airborne particles from the air passing through the cleaner. If your system is so equipped, ask your dealer for maintenance instructions.

5 - **Indoor Unit** – The indoor unit's evaporator coil is equipped with a drain pan to collect condensate formed as your system removes humidity from the inside air. Have your dealer show you the location of the drain line and how to check for obstructions. (This would also apply to an auxiliary drain, if installed.)

Thermostat Operation

See the thermostat homeowner manual for instructions on how to operate your thermostat.

Heat Pump Operation

Your new Lennox heat pump has several characteristics that you should be aware of:

- Heat pumps satisfy heating demand by delivering large amounts of warm air into the living space. This is quite different from gas- or oil-fired furnaces or an electric furnace which deliver lower volumes of considerably hotter air to heat the space.
- Do not be alarmed if you notice frost on the outdoor coil in the winter months. Frost develops on the outdoor coil during the heating cycle when temperatures are below 45°F (7°C). An electronic control activates a defrost cycle lasting 5 to 15 minutes at preset intervals to clear the outdoor coil of the frost.
- During the defrost cycle, you may notice steam rising from the outdoor unit. This is a normal occurrence. The thermostat may engage auxiliary heat during the defrost cycle to satisfy a heating demand; however, the unit will return to normal operation at the conclusion of the defrost cycle.

Extended Power Outage

The heat pump is equipped with a compressor crankcase heater which protects the compressor from refrigerant slugging during cold weather operation.

If power to your unit has been interrupted for several hours or more, set the room thermostat selector to the EMERGENCY HEAT setting to obtain temporary heat without the risk of serious damage to the heat pump.

In EMERGENCY HEAT mode, all heating demand is satisfied by auxiliary heat; heat pump operation is locked out. After a six-hour compressor crankcase warm-up period, the thermostat can be switched to the HEAT setting and normal heat pump operation may resume.

Preservice Check

If your system fails to operate, check the following before calling for service:

- Verify room thermostat settings are correct.
- Verify that all electrical disconnect switches are ON.
- Check for any blown fuses or tripped circuit breakers.
- Verify unit access panels are in place.
- Verify air filter is clean.
- If service is needed, locate and write down the unit model number and have it handy before calling.

Accessories

For update-to-date information, see any of the following publications:

- Lennox ML16KP2 Product Specification bulletin
- Lennox Product Catalog
- Lennox Price Book

CUT SIZE: 6-1/4" WIDE x 10-3/8" TALL

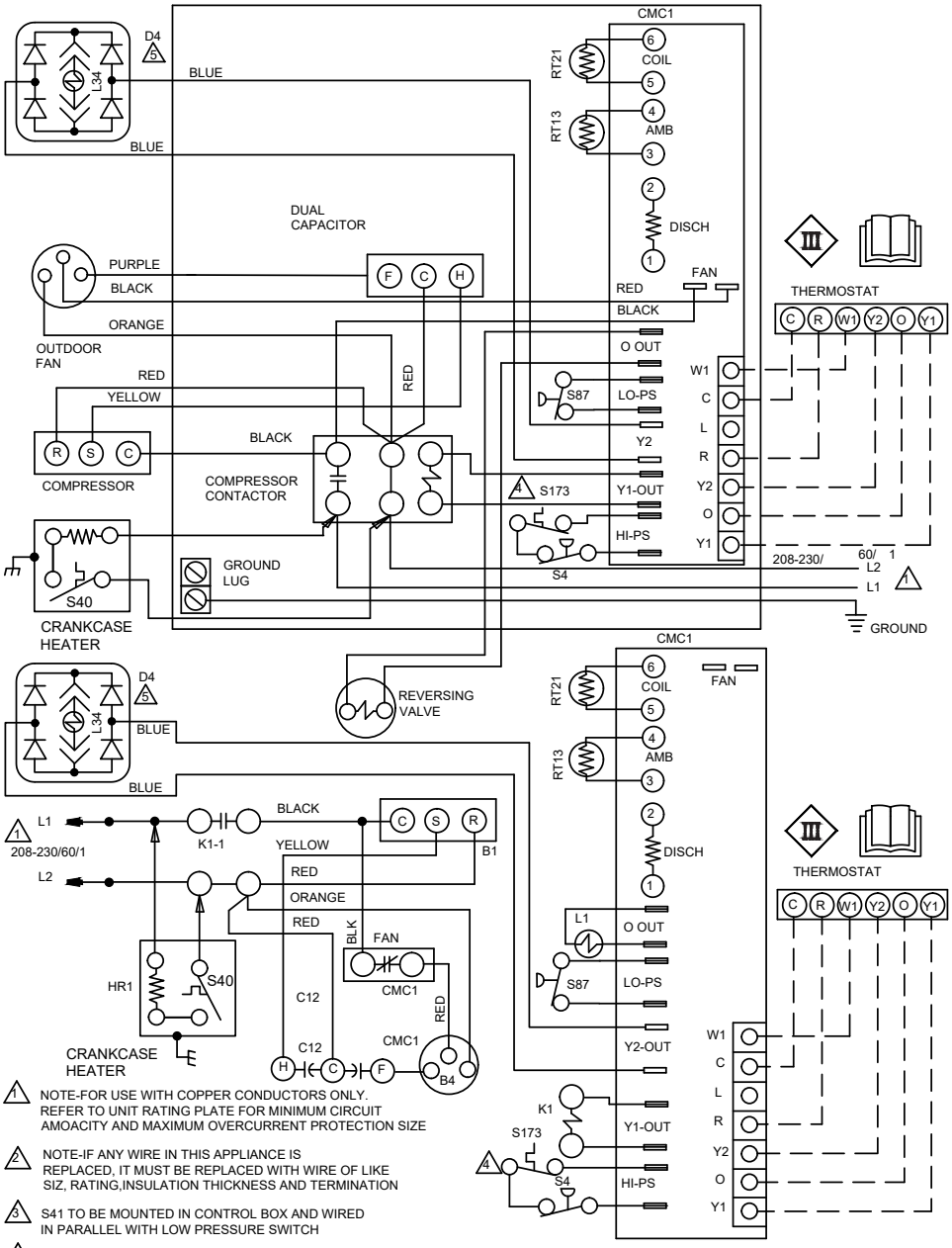

1 NOTE-FOR USE WITH COPPER CONDUCTORS ONLY. REFER TO UNIT RATING PLATE FOR MINIMUM CIRCUIT AMOACITY AND MAXIMUM OVERCURRENT PROTECTION SIZE

2 NOTE-IF ANY WIRE IN THIS APPLIANCE IS REPLACED, IT MUST BE REPLACED WITH WIRE OF LIKE SIZ, RATING,INSULATION THICKNESS AND TERMINATION

3 S41 TO BE MOUNTED IN CONTROL BOX AND WIRED IN PARALLEL WITH LOW PRESSURE SWITCH

4 S173 SWITCH USED ONLY IN UNITS EQUIPPED WITH COMPRESSORS WHICH DO NOT INCLUDE INTERNAL SWITCH

5 L34 SOLENOID IS LOCATED IN COMPRESSOR COIL IS 24VDC. DO NOT CONNECT 24VAC TO COIL TERMINALS.

DESCRIPTION	
KEY	COMPONENT
B1	COMPRESSOR
B4	MOTOR-OUTDOOR FAN
C12	CAPACITOR-DUAL
CMC1	CONTROL-DEFROST
D4	DIODE BRIDGE
HR1	HEATER-COMPRESSOR
K1,-1	CONTACTOR-COMPRESSOR
L1	VALVE-REVERSING
S4	SWITCH-HIGH PRESSURE
S6	SWITCH-DEFROST
S40	TERMOSTAT-CRANKCASE
S41	THERMOSTAT-LOW AMBIENT
S87	SWITCH-LOW PRESS, COMP 1
S173	SWITCH-THERMAL PROTECTION

S173 4 HI-PS S4

3 S41 LOW AMBIENT THERMO — S87 LOW PRESSURE SWITCH — LO-PS

LINE VOLTAGE FIELD INSTALLED
CLASS II VOLTAGE FIELD WIRING
DENOTES OPTIONAL COMPONENTS

TWO SPEED HEAT PUMPS | Supersedes

09/25 Form No. 538641-01

© 2011 Litho U.S.A.

FIGURE 14. Typical Unit Wiring for 2 Ton Units

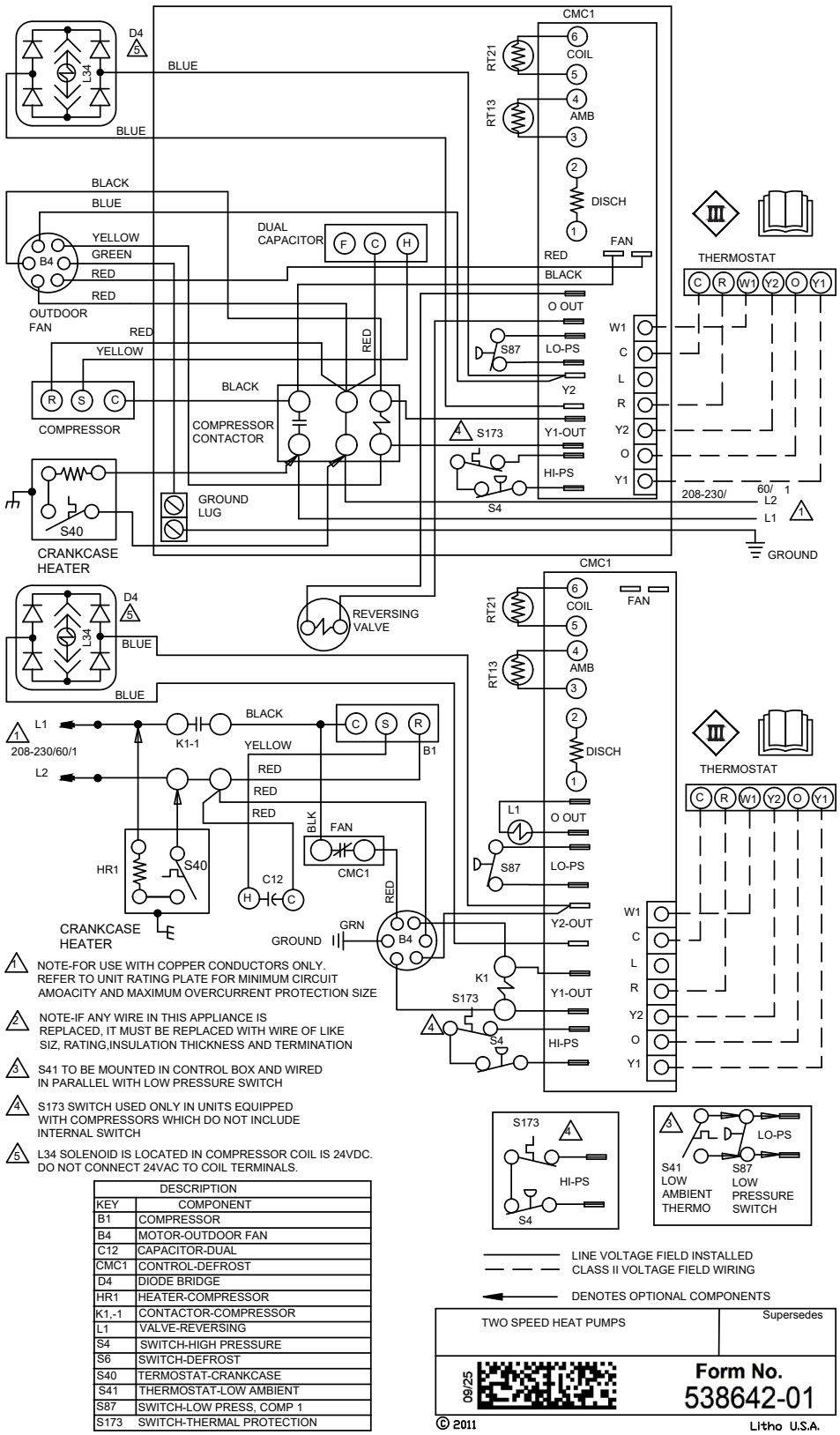

DESCRIPTION	
KEY	COMPONENT
B1	COMPRESSOR
B4	MOTOR-OUTDOOR FAN
C12	CAPACITOR-DUAL
CMC1	CONTROL-DEFROST
D4	DIODE BRIDGE
HR1	HEATER-COMPRESSOR
K1,-1	CONTACTOR-COMPRESSOR
L1	VALVE-REVERSING
S4	SWITCH-HIGH PRESSURE
S6	SWITCH-DEFROST
S40	TERMOSTAT-CRANKCASE
S41	THERMOSTAT-LOW AMBIENT
S87	SWITCH-LOW PRESS, COMP 1
S173	SWITCH-THERMAL PROTECTION

FIGURE 15. Typical Unit Wiring for 3 Ton Units

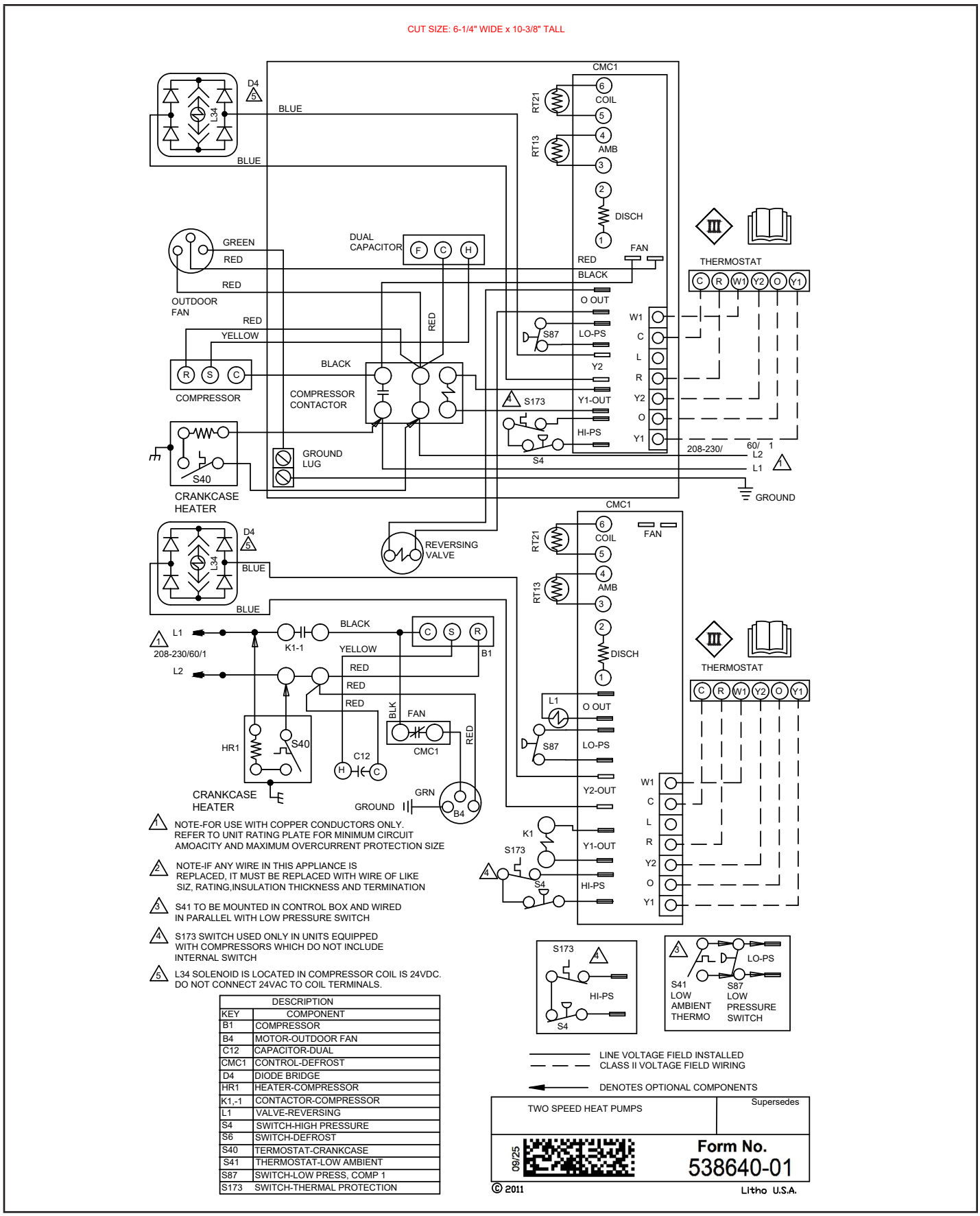

DESCRIPTION	
KEY	COMPONENT
B1	COMPRESSOR
B4	MOTOR-OUTDOOR FAN
C12	CAPACITOR-DUAL
CMC1	CONTROL-DEFROST
D4	DIODE BRIDGE
HR1	HEATER-COMPRESSOR
K1,-1	CONTACTOR-COMPRESSOR
L1	VALVE-REVERSING
S4	SWITCH-HIGH PRESSURE
S6	SWITCH-DEFROST
S40	TERMOSTAT-CRANKCASE
S41	THERMOSTAT-LOW AMBIENT
S87	SWITCH-LOW PRESS, COMP 1
S173	SWITCH-THERMAL PROTECTION

FIGURE 16. Typical Unit Wiring for 4-5 Ton Units

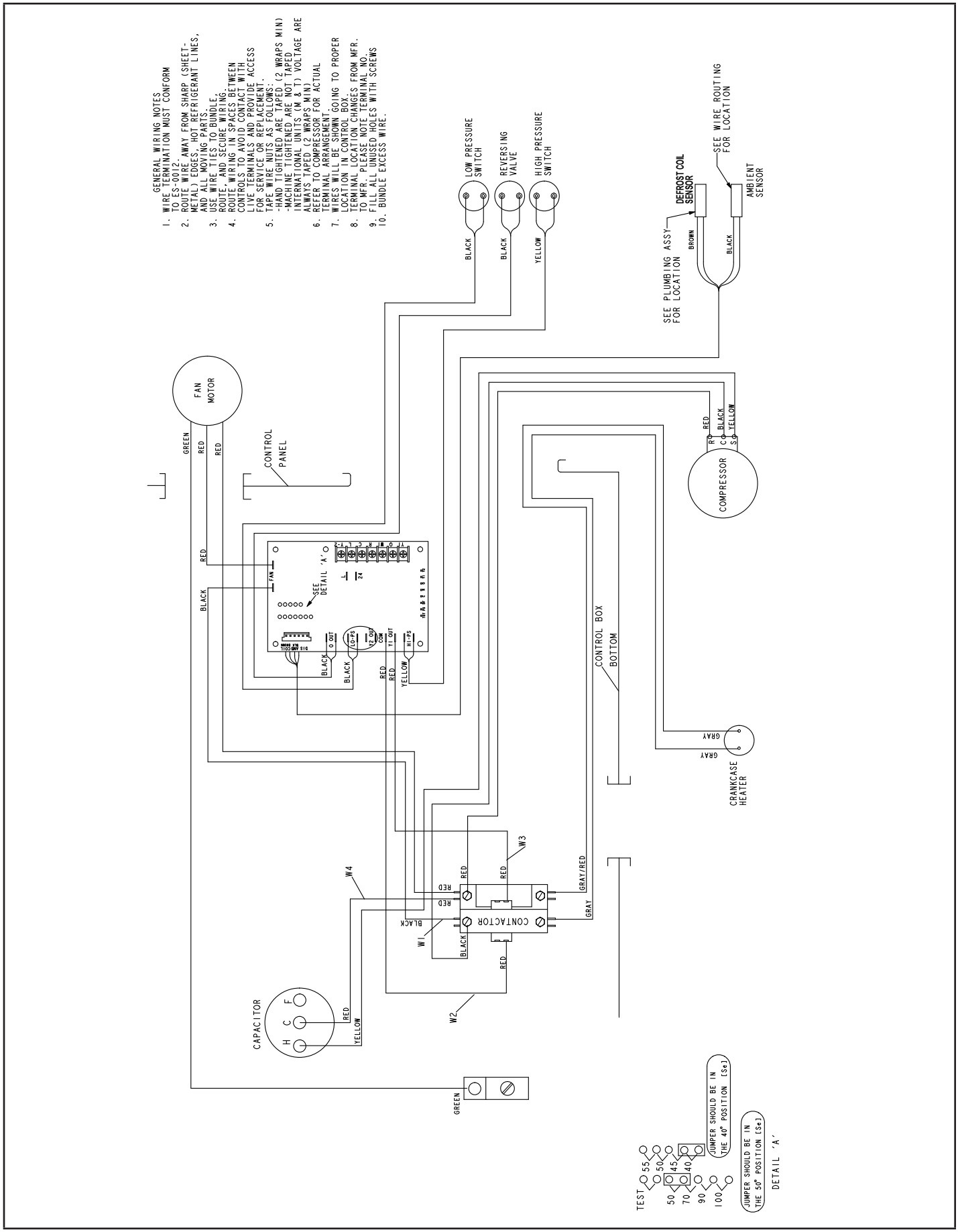

FIGURE 17. Typical Factory Wiring

ML16KP2 OPERATING SEQUENCE

This is the sequence of operation for ML16KP2 series units. The sequence is outlined by numbered steps which correspond to circled numbers on the adjacent diagram. The steps are identical for both cooling and first stage heating demand with the exception reversing valve L1 is energized during cooling demand and de-energized during heating demand.

***NOTE** – Transformer in indoor unit supplies power (24 VAC) to the thermostat and outdoor unit controls.*

First and second stage cooling operate independent of each other and can modulate back and forth according to the thermostat demand.

FIRST STAGE COOLING (Low Capacity)

1 - Cooling demand initiates at Y1 at the thermostat.

2 - Voltage from terminal Y passes through S4 high pressure switch, energizes K1 compressor contactor, passes through the low pressure switch (S87) and returns to common side of the 24VAC power.

3 - K1 closes, energizing B1 compressor and B4 outdoor fan.

4 - Solenoid L34 is not energized, so the slider ring remains open, limiting compressor to low capacity.

SECOND STAGE COOLING (Low Capacity)

Compressor is operating in first stage cooling. Second stage thermostat demand sends voltage to rectifier plug D4. D4 converts the AC voltage to DC voltage and energizes L34 unloader solenoid. L34 closes the slider ring, allowing the compressor to operate at high capacity.

END OF COOLING DEMAND:

5 - Demand is satisfied. Terminal Y1 is de-energized.

6 - Compressor contactor K1 is de-energized.

7 - K1-1 opens and compressor (B1) and outdoor fan motor (B4) are de-energized and stop immediately.

FIRST STAGE HEAT:

Internal thermostat wiring de-energizes terminal O by heating mode selection, de-energizing the reversing valve L1.

See steps 1, 2 and 3.

End of FIRST STAGE HEAT:

See steps 4, 5 and 6.

DEFROST MODE:

When a defrost cycle is initiated, the control energizes the reversing valve solenoid and turns off the condenser fan. The control will also put 24VAC on the “W1” (auxiliary heat) line. The unit will stay in this mode until either the coil sensor temperature is above the selected termination temperature, the defrost time of 14 minutes has been completed, or the room thermostat demand cycle has been satisfied. (If the temperature select shunt is not installed, the default termination temperature will be 90°F.) If the room thermostat demand cycle terminates the cycle, the defrost cycle will be held until the next room thermostat demand cycle. If the coil sensor temperature is still below the selected termination temperature, the control will continue the defrost cycle until the cycle is terminated in one of the methods mentioned above.

Servicing Units Void of Charge

If the outdoor unit is void of refrigerant, clean the system using the procedure described below.

1 - Leak check system using procedure outlined on page 17.

2 - Evacuate the system using procedure outlined on page 18.

3 - Use nitrogen to break the vacuum and install a new filter drier in the system.

4 - Evacuate the system again using procedure outlined on page 18.

5 - Weigh in refrigerant.

Start-Up

⚠ IMPORTANT

If unit is equipped with a crankcase heater, it should be energized 24 hours before unit start-up to prevent compressor damage as a result of slugging.

1 - Rotate fan to check for binding.

2 - Inspect all factory and field-installed wiring for loose connections.

3 - After evacuation is complete, open the liquid line and suction line service valves to release the refrigerant charge (contained in outdoor unit) into the system.

4 - Replace the stem caps and tighten as specified in Operating Service Valves on page 7.

5 - Check voltage supply at the disconnect switch. The voltage must be within the range listed on the unit's nameplate. If not, do not start the equipment until you have consulted with the power company and the voltage condition has been corrected.

6 - Set the thermostat for a cooling demand. Turn on power to the indoor indoor unit and close the outdoor unit disconnect switch to start the unit.

7 - Check system for sufficient refrigerate by using the procedures listed under Start-Up and Charging Procedures.

8 - Recheck voltage while the unit is running. Power must be within range shown on the nameplate.

Decommissioning

Before carrying out this procedure, it is essential that the technician is completely familiar with the equipment and all its detail. It is recommended good practice that all refrigerants are recovered safely.

Prior to the task being carried out, an oil and refrigerant sample shall be taken in case analysis is required prior to re-use of recovered refrigerant. It is essential that electrical power is available before starting decommissioning.

a) Become familiar with the equipment and its operation.

b) Isolate system electrically.

c) Before attempting the procedure, ensure that:

- mechanical handling equipment is available, if required, for handling refrigerant cylinders;
- all personal protective equipment is available and being used correctly;
- the recovery process is supervised at all times by a competent person;
- recovery equipment and cylinders conform to the appropriate standards.

d) Pump down refrigerant system, if possible.

e) If a vacuum is not possible, make a manifold so that refrigerant can be removed from various parts of the system.

f) Make sure that cylinder is situated on the scales before recovery takes place.

g) Start the recovery machine and operate in accordance with instructions.

h) Do not overfill cylinders (no more than 80% volume liquid charge).

i) Do not exceed the maximum working pressure of the cylinder, even temporarily.

j) When the cylinders have been filled correctly and the process completed, make sure that the cylinders and the equipment are removed from site promptly and all isolation valves on the equipment are closed off.

k) Recovered refrigerant shall not be charged into another REFRIGERATING SYSTEM unless it has been cleaned and checked.

⚠ IMPORTANT

Equipment shall be labelled stating that it has been decommissioned and emptied of refrigerant. The label shall be signed and dated. Ensure that there are labels on the equipment that state the flammability of the refrigerant used.

R454B CHARGING INFORMATION – FOR COMPLETE CHARGING DETAILS, REFER TO THE OUTDOOR UNIT INSTALLATION AND SERVICE PROCEDURE

Maintenance checks using the Normal Operating Pressures table

Table 2 may be used to help perform maintenance checks. This table is not a procedure for charging the system and any minor variations in the pressures may be expected due to differences in installations. However, significant deviations could mean that the system is not properly charged or that a problem exists with some component in the system.

Charge Using the Subcooling Method

Cooling Mode – When the outdoor ambient temperature is 60°F (15°C) and above, use the cooling mode to adjust the charge using the subcooling method. Target subcooling values in table 1 are based on 70 to 80°F (21-27°C) indoor return air temperature.

Heating Mode – When the outdoor ambient temperature is below 60°F (15°C), use the heating mode to adjust the charge using the subcooling charge levels (table). Target subcooling values in table 1 are based on 65-75°F (18-24°C) indoor return air temperature.

Matchups/Charge Levels and Line Set Lengths

Table 2 lists all the Lennox recommended indoor unit matchups along with the charge levels for the various sizes of outdoor units. ***Charge levels on the unit nameplate are based on installations with 30ft. (9.1m) line sets; on line sets with 3/8"(9.5mm) liquid line, add 3oz. additional refrigerant for every 5ft. longer than 30ft. If line length is less than 30ft., subtract this amount (see Installation Instructions for more details)***.

Charge Using the Weigh-in Method

If the system is void of refrigerant, locate and repair any leaks and then weigh in the refrigerant charge into the unit. For charge adjustments, be sure to consider line set length differences and, referring to table 1, adjust for the matchup difference.

1 - Recover the refrigerant from the unit.
2 - Conduct leak check; evacuate as previously outlined.
3 - Weigh in the unit nameplate charge, adjusting for matchup and line set length differences. If weighing facilities are not available use the Subcooling method.

Table 1 – Normal Operating Pressures (Liquid ±10 and Vapor ±5 psig)

Temperature	Cooling Operation – Liquid Line Pressure / Vapor Line Pressure			
°F*	-024	-036	-048	-060
65	227/134	245/128	236/126	255/124
75	265/136	284/130	275/130	297/126
85	307/138	328/132	317/132	343/127
95	356/141	375/133	367/134	393/129
105	408/143	426/136	417/137	447/131
115	467/145	479/138	471/139	500/137
Temperature	**Heating Operation – Liquid Line Pressure / Vapor Line Pressure**			
20	355/59	262/36	265/41	294/47
30	366/73	397/70	388/57	313/61
40	374/89	314/83	315/78	332/71
50	392/107	329/99	340/93	364/93
60	401/126	346/115	361/111	382/112

*Temperature of air entering the outdoor coil.

Table 2 – Indoor Unit Matches and Subcooling Charge Levels and Additional Charge**

Indoor Matchup	Target Subcool		Total Charge		Additional Charge	
	Heating (±5°F)	Cooling (±1°F)	lbs	oz	lbs	oz
ML16KP2-024						
CBK47UHE-024	10	10	6	14	1	9
CBK48MVT-018/024	10	10	6	14	1	9
CBK45UHVT-024	12	9	6	12	1	7
CBK45UHVT-030	11	9	7	2	1	13
CBK47UHET-030	17	16	7	13	2	8
CBK48MVT-030	17	16	7	13	2	8
CK40CT-24A/B	16	11	7	0	1	11
CK40CT-30A/B	23	7	5	10	0	5
CK40HT-24A	13	7	6	3	0	14
CK40HT-24B	13	7	5	9	0	4
CK40HT-30A	11	10	6	10	1	5
CK40HT-30B	12	7	5	5	0	0
CK40DT-24B	30	9	7	2	1	13
CK40DT-30/36B	24	9	6	3	0	14
CBK43UHET-024	13	10	7	3	1	14
CBK43UHET-030	11	9	7	5	2	0
CK40DT-30/36C	32	10	7	0	1	11
ML16KP2-036						
CBK47UHE-036	18	6	8	4	1	14
CBK48MVT-036	18	6	8	4	1	14
CBK47UHET-042	11	7	8	8	2	2
CBK48MVT-042	11	7	8	8	2	2
CBK45UHVT-036	13	7	8	15	2	9
CBK45UHVT-042	11	3	8	6	2	0
CK40CT-36A/B	16	7	8	9	2	3
CK40CT-48B/C	14	7	8	12	2	6
CK40CT-50/60C	14	7	9	1	2	11
CK40HT-36B	25	4	7	1	0	11
CK40HT-36C	12	7	8	5	1	15
CK40HT-42B	12	10	10	1	3	11
CK40HT-42C	15	7	8	15	2	9
CK40HT-48C	14	7	8	8	2	2
CK40HT-48B	15	8	8	7	2	1
CK40HT-51/61C	14	9	9	13	3	7
CK40DT-30/36C	35	4	6	6	0	0
CK40DT-48C	43	11	9	5	2	15
CK40DT-50/60C	26	4	8	1	1	11
CBK43UHET-036	29	4	8	8	2	2
CBK43UHET-042	11	5	8	5	1	15
CK40DT-42B	37	4	8	5	1	15
CK40DT-60D	25	4	9	1	2	11

Indoor Matchup	Target Subcool		Total Charge		Additional Charge	
	Heating (±5°F)	Cooling (±1°F)	lbs	oz	lbs	oz
ML16KP2-048						
CBK47UHE-048	13	8	10	1	1	3
CBK48MVT-048	13	8	10	1	1	3
CBK47UHE-060	11	11	11	4	2	6
CBK48MVT-060	11	11	11	4	2	6
CBK45UHVT-048	15	6	9	5	0	7
CBK45UHVT-060	11	8	9	12	0	14
CK40CT-48B/C	21	8	10	6	1	8
CK40CT-49C	14	10	10	1	1	3
CK40CT-50/60C	17	7	9	5	0	7
CK40CT-60C	10	9	10	9	1	11
CK40CT-60D	9	8	9	3	0	5
CK40HT-48B	14	4	9	1	0	3
CK40HT-48C	16	5	8	14	0	0
CK40HT-51/61C	6	4	9	3	0	5
CK40HT-60D	15	11	10	6	1	8
CK40DT-50/60C	36	4	9	3	0	5
CBK43UHET-048	13	8	10	2	1	4
CBK43UHET-060	12	11	9	9	0	11
CK40DT-60D	32	5	9	9	0	11
ML16KP2-060						
CBK47UHE-060	12	11	10	8	0	12
CBK48MVT-060	12	11	10	8	0	12
CBK45UHVT-060	14	6	10	7	0	11
CK40CT-49C	13	8	10	1	0	5
CK40CT-50/60C	24	8	10	4	0	8
CK40CT-60C	9	5	10	9	0	13
CK40CT-60D	13	5	10	3	0	7
CK40HT-51/61C	19	6	10	4	0	8
CK40HT-60D	16	7	10	8	0	12
CK40DT-50/60C	43	5	9	12	0	0
CBK43UHET-060	28	4	10	6	0	10
CK40DT-60D	52	5	10	12	1	0

The values in this table are most popular match-up pressures; indoor match-up, indoor air quantity, and indoor load will cause the pressures to vary.
**Amount of charge required in addition to charge shown on unit nameplate.

0626
581418-01

TABLE 6. R454B Temperature (°F) - Pressure (Psig)

Pressure (psig)	Saturated Liquid Temp (F°)	Saturated Vapor Temp (F°)	Pressure (psig)	Saturated Liquid Temp (F°)	Saturated Vapor Temp (F°)	Pressure (psig)	Saturated Liquid Temp (F°)	Saturated Vapor Temp (F°)	Pressure (psig)	Saturated Liquid Temp (F°)	Saturated Vapor Temp (F°)
0	-58.9	-57.1	158	58.9	61.3	272	93.0	95.4	362	113.4	115.6
25	-19.2	-17.2	160	59.6	62.0	274	93.5	95.9	364	113.8	116.0
30	-13.9	-11.8	165	61.4	63.8	276	94.0	96.4	366	114.2	116.4
35	-9.0	-6.9	170	63.1	65.5	278	94.5	96.9	368	114.6	116.8
40	-4.4	-2.3	175	64.9	67.3	280	95.0	97.4	370	115.0	117.2
45	-0.2	1.9	180	66.6	69.0	282	95.5	97.9	372	115.4	117.6
50	3.7	5.9	185	68.2	70.6	284	96.0	98.4	374	115.8	118.0
55	7.5	9.7	190	69.8	72.2	286	96.5	98.8	376	116.2	118.4
60	11.0	13.2	195	71.4	73.8	288	97.0	99.3	378	116.6	118.8
65	14.4	16.6	200	73.0	75.4	290	97.5	99.8	380	117.0	119.2
70	17.6	19.8	202	73.6	76.0	292	97.9	100.3	382	117.4	119.6
75	20.6	22.9	204	74.2	76.6	294	98.4	100.7	384	117.7	119.9
80	23.6	25.9	206	74.9	77.3	296	98.9	101.2	386	118.1	120.3
85	26.4	28.7	208	75.5	77.9	298	99.4	101.7	388	118.5	120.7
90	29.1	31.4	210	76.1	78.5	300	99.8	102.2	390	118.9	121.1
95	31.7	34.0	212	76.7	79.1	302	100.3	102.6	392	119.3	121.5
100	34.3	36.6	214	77.3	79.7	304	100.8	103.1	394	119.7	121.9
102	35.3	37.6	216	77.9	80.2	306	101.2	103.5	396	120.1	122.2
104	36.2	38.6	218	78.4	80.8	308	101.7	104.0	398	120.5	122.6
106	37.2	39.5	220	79.0	81.4	310	102.1	104.4	400	120.8	123.0
108	38.1	40.5	222	79.6	82.0	312	102.6	104.9	405	121.8	123.9
110	39.1	41.4	224	80.2	82.6	314	103.0	105.4	410	122.7	124.9
112	40.0	42.4	226	80.8	83.1	316	103.5	105.8	415	123.6	125.8
114	40.9	43.3	228	81.3	83.7	318	103.9	106.2	420	124.6	126.7
116	41.8	44.2	230	81.9	84.3	320	104.4	106.7	425	125.5	127.6
118	42.7	45.1	232	82.4	84.8	322	104.8	107.1	430	126.4	128.5
120	43.6	46.0	234	83.0	85.4	324	105.3	107.6	435	127.3	129.4
122	44.5	46.9	236	83.6	86.0	326	105.7	108.0	440	128.2	130.2
124	45.4	47.7	238	84.1	86.5	328	106.2	108.5	445	129.0	131.1
126	46.2	48.6	240	84.7	87.1	330	106.6	108.9	450	129.9	132.0
128	47.1	49.4	242	85.2	87.6	332	107.0	109.3	460	131.6	133.7
130	47.9	50.3	244	85.8	88.1	334	107.5	109.7	470	133.3	135.3
132	48.8	51.1	246	86.3	88.7	336	107.9	110.2	480	135.0	137.0
134	49.6	51.9	248	86.8	89.2	338	108.3	110.6	490	136.7	138.6
136	50.4	52.8	250	87.4	89.7	340	108.8	111.0	500	138.3	140.2
138	51.2	53.6	252	87.9	90.3	342	109.2	111.5	510	139.9	141.8
140	52.0	54.4	254	88.4	90.8	344	109.6	111.9	520	141.5	143.3
142	52.8	55.2	256	88.9	91.3	346	110.0	112.3	530	143.0	144.8
144	53.6	56.0	258	89.5	91.8	348	110.5	112.7	540	144.5	146.3
146	54.3	56.7	260	90.0	92.4	350	110.9	113.1	550	146.1	147.8
148	55.1	57.5	262	90.5	92.9	352	111.3	113.5	560	147.5	149.2
150	55.9	58.3	264	91.0	93.4	354	111.7	114.0	570	149.0	150.7
152	56.6	59.0	266	91.5	93.9	356	112.1	114.4	580	150.5	152.1
154	57.4	59.8	268	92.0	94.4	358	112.5	114.8	590	151.9	153.5
156	58.1	60.5	270	92.5	94.9	360	112.9	115.2	600	153.3	154.8

NOTES

1. R-454B is a zeotropic blend and must be charged with liquid refrigerant only.
2. Saturated liquid temperature is used to calculate liquid subcooling.
3. Saturated vapor temperature is used to calculate suction superheat.
4. See unit charging label for subcooling and additional charging information.

Start-Up and Performance Checklist

Job Name _____ Job no. _____ Date _____

Job Location _____ City _____ State _____

Installer _____ City _____ State _____

Unit Model No. _____ Serial No. _____ Service Technician _____

Nameplate Voltage _____

Rated Load Ampacity _____ Compressor _____ Outdoor Fan _____

Maximum Fuse or Circuit Breaker _____

Electrical Connections Tight? ❑ Indoor Filter clean? ❑ Supply Voltage (Unit Off) _____

Indoor Blower RPM _____ S.P. Drop Over Indoor (Dry) _____ Outdoor Coil Entering Air Temp. _____

Discharge Pressure _____ Suction Pressure _____ Refrigerant Charge Checked? ❑

Refrigerant Lines: - Leak Checked? ❑ Properly Insulated? ❑

Service Valves: --- Fully Opened? ❑ Caps Tight? ❑

Voltage With Compressor Operating _____

Outdoor Fan Checked? ❑

Thermostat

Calibrated? ❑ Properly Set? ❑ Level? ❑