UNIT INFORMATION

Corp. 100144
April 2026

EL18KCV

EL18KCV (R454B) SERIES OUTDOOR UNITS

⚠ WARNING

Improper installation, adjustment, alteration, service or maintenance can cause property damage, personal injury or loss of life. Installation and service must be performed by a licensed professional HVAC installer or equivalent, service agency, or the gas supplier.

⚠ IMPORTANT

The Clean Air Act of 1990 bans the intentional venting of refrigerant (CFCs and HCFCs) as of July 1, 1992. Approved methods of recovery, recycling or reclaiming must be followed. Fines and/or incarceration may be levied for noncompliance.

⚠ IMPORTANT

This unit must be matched with an indoor coil as specified with AHRI. For AHRI Certified system match-ups and expanded ratings, visit www.LennoxPros.com.

⚠ CAUTION

As with any mechanical equipment, contact with sharp sheet metal edges can result in personal injury. Take care while handling this equipment and wear gloves and protective clothing.

⚠ WARNING

To prevent serious injury or death:

1. Lock-out/tag-out before performing maintenance.
2. If system power is required (e.g., smoke detector maintenance), disable power to blower, remove fan belt where applicable, and ensure all controllers and thermostats are set to the “OFF” position before performing maintenance.
3. Always keep hands, hair, clothing, jewelry, tools, etc. away from moving parts.

Table of Contents

Model Number Identification....6
Typical Serial Number Identification....6
Specifications....7
Electrical Data....7
Unit Dimensions – Inches (mm)....8
Typical Unit Parts Arrangement....9
Operating Gauge Set and Service Valves....11
Installation....13
Unit Placement....13
Removing and Installing Panels....16
New or Replacement Line Set....16
Brazing Connections....20
Flushing Line Set and Indoor Coil....23
Leak Testing the System....25
Evacuating Line Set and Indoor Coil....27
Servicing Units Delivered Void of Charge....37
Unit Start-Up....37
System Operation and Service....38
Unit Selection Code for Outdoor Control....45
Configuring Unit....48
S40 Thermostat....49
System Overview....49
Diagnostic Information....49
Maintenance....50
Unit Wiring Diagrams....51
Factory Wiring Diagrams....53
Unit Sequence of Operation....55
Component Testing....58
System Configuration....70
Unit Operation....71
6-Pin Sensor Harness (DIS, AMB, COIL)....72
4-Pin Suction Temperature Sensor / Liquid Temperature Sensor Harness....72
System Refrigerant....80
Charge Mode Jumper....80
Charging....82
Decomissioning....85

⚠ WARNING

- Do not use means to accelerate the defrosting process or to clean, other than those recommended by the manufacturer.
- The appliance shall be stored in a room without continuously operating ignition sources (for example: open flames, an operating gas appliance, or an operating electric heater).
- Do not pierce or burn.
- Be aware that refrigerants may not contain an odor.

⚠ CAUTION

Servicing shall be performed only as recommended by the manufacturer.

⚠ WARNING

Ducts connected to an appliance shall not contain a potential ignition source

⚠ WARNING

Every working procedure that affects safety means shall only be carried out by competent persons. This appliance is not to be used by persons (including children) with reduced physical, sensory or mental capabilities, or lack of experience and knowledge, unless they have been given supervision or instruction concerning use of the appliance by a person responsible for their safety. Children should be supervised to ensure they do not play with the appliance.

⚠ IMPORTANT

Ensure that the area is in the open or that it is adequately ventilated before breaking into the system or conducting any hot work. A degree of ventilation shall continue during the period that the work is carried out.

⚠ IMPORTANT

Verify cabling will not be subject to wear, corrosion, excessive pressure, vibration, sharp edges or any other adverse environmental effects.

⚠ IMPORTANT

Pipe work, including piping material, pipe routing, and installation shall include protection from physical damage in operation and service, and be in compliance with national and local codes and standards, such as ASHRAE 15, ASHRAE 15.2, UL 207, IAPMO Uniform Mechanical Code, ICC International Mechanical Code, or CSA B52. All field joints shall be accessible for inspection prior to being covered or enclosed.

⚠ CAUTION

Under no circumstances shall potential sources of ignition be used in the searching for or detection of refrigerant leaks. A halide torch (or any other detector using a naked flame) shall not be used.

The following leak detection methods are deemed acceptable for all refrigerant systems.

Electronic leak detectors may be used to detect refrigerant leaks but, in the case of flammable refrigerants, the sensitivity may not be adequate, or may need re-calibration. (Detection equipment shall be calibrated in a refrigerant-free area.) Ensure that the detector is not a potential source of ignition and is suitable for the refrigerant used. Leak detection equipment shall be set at a percentage of the LFL of the refrigerant and shall be calibrated to the refrigerant employed, and the appropriate percentage of gas (25 % maximum) is confirmed. Leak detection fluids are also suitable for use with most refrigerants but the use of detergents containing chlorine shall be avoided as the chlorine may react with the refrigerant and corrode the copper pipe-work. If a leak is suspected, all naked flames shall be removed/extinguished. If a leakage of refrigerant is found which requires brazing, all of the refrigerant shall be recovered from the system, or isolated (by means of shut off valves) in a part of the system remote from the leak.

⚠ CAUTION

Some soaps used for leak detection are corrosive to certain metals. Carefully rinse piping thoroughly after leak test has been completed. Do not use matches, candles, flame or other sources of ignition to check for gas leaks.

⚠ WARNING

PARTIAL UNITS shall only be connected to an appliance suitable for the same refrigerant.

⚠ IMPORTANT

When breaking into the refrigerant circuit to make repairs – or for any other purpose – conventional procedures shall be used. However, for flammable refrigerants it is important that best practice be followed and, since flammability is a consideration, procedures such as safely remove refrigerant following local and national regulations, purging the circuit with inert gas, evacuating (optional for A2L), purging with inert gas (optional for A2L), or opening the circuit by cutting or brazing be adhered to. The refrigerant charge shall be recovered into the correct recovery cylinders if venting is not allowed by local and national codes. For appliances containing flammable refrigerants, the system shall be purged with oxygen-free nitrogen to render the appliance safe for flammable refrigerants.

This process might need to be repeated several times. Compressed air or oxygen shall not be used for purging refrigerant systems. For appliances containing flammable refrigerants, refrigerants purging shall be achieved by breaking the vacuum in the system with oxygen-free nitrogen and continuing to fill until the working pressure is achieved, then venting to atmosphere, and finally pulling down to a vacuum (optional for A2L). This process shall be repeated until no refrigerant is within the system (optional for A2L). When the final oxygen-free nitrogen charge is used, the system shall be vented down to atmospheric pressure to enable work to take place. Ensure that the outlet for the vacuum pump is not close to any potential ignition sources and that ventilation is available.

⚠ IMPORTANT

In addition to conventional charging procedures, the following requirements shall be followed.

- Ensure that contamination of different refrigerants does not occur when using charging equipment. Hoses or lines shall be as short as possible to minimize the amount of refrigerant contained in them.
- Cylinders shall be kept in an appropriate position according to the instructions.
- Ensure that the REFRIGERATING SYSTEM is earthed prior to charging the system with refrigerant.
- Label the system when charging is complete (if not already).
- Extreme care shall be taken not to overfill the REFRIGERATING SYSTEM.

Prior to recharging the system, it shall be pressure-tested with the appropriate purging gas. The system shall be leak tested on completion of charging, but prior to commissioning. A follow up leak test shall be carried out prior to leaving the site.

⚠ IMPORTANT

When removing refrigerant from a system, either for servicing or decommissioning, it is recommended good practice that all refrigerants are removed safely.

When transferring refrigerant into cylinders, ensure that only appropriate refrigerant recovery cylinders are employed. Ensure that the correct number of cylinders for holding the total system charge is available. All cylinders to be used are designated for the recovered refrigerant and labelled for that refrigerant (i. e. special cylinders for the recovery of refrigerant). Cylinders shall be complete with pressure-relief valve and associated shut-off valves in good working order. Empty recovery cylinders are evacuated and, if possible, cooled before recovery occurs.

The recovery equipment shall be in good working order with a set of instructions concerning the equipment that is at hand and shall be suitable for the recovery of all appropriate refrigerants including, when applicable, flammable refrigerants. In addition, a set of calibrated weighing scales shall be available and in good working order. Hoses shall be complete with leak-free disconnect couplings and in good condition. Before using the recovery machine, check that it is in satisfactory working order, has been properly maintained and that any associated electrical components are sealed to prevent ignition in the event of a refrigerant release. Consult manufacturer if in doubt.

The recovered refrigerant shall be returned to the refrigerant supplier in the correct recovery cylinder, and the relevant waste transfer note arranged. Do not mix refrigerants in recovery units and especially not in cylinders.

If compressors or compressor oils are to be removed, ensure that they have been evacuated to an acceptable level to make certain that flammable refrigerant does not remain within the lubricant. The evacuation process shall be carried out prior to returning the compressor to the suppliers. Only electric heating to the compressor body shall be employed to accelerate this process. When oil is drained from a system, it shall be carried out safely.

⚠ IMPORTANT

After completion of field piping for split systems, the field pipework shall be pressure tested with an inert gas and then vacuum tested prior to refrigerant charging, according to the following requirements;

– Field-made refrigerant joints indoors shall be tightness tested. The test method shall have a sensitivity of .2 oz. per year of refrigerant or better, under pressure.

No leak shall be detected.

⚠ IMPORTANT

Prior to beginning work on systems containing FLAMMABLE REFRIGERANTS, safety checks are necessary to ensure that the risk of ignition is minimized.

⚠ IMPORTANT

Work shall be undertaken under a controlled procedure so as to minimize the risk of a flammable gas or vapor being present while the work is being performed.

⚠ IMPORTANT

All maintenance staff and others working in the local area shall be instructed on the nature of work being carried out. Work in confined spaces shall be avoided.

⚠ IMPORTANT

The area shall be checked with an appropriate refrigerant detector prior to and during work, to ensure the technician is aware of potentially toxic or flammable atmospheres. Ensure that the leak detection equipment being used is suitable for use with all applicable refrigerants, i.e. non-sparking, adequately sealed or intrinsically safe.

⚠ IMPORTANT

If any hot work is to be conducted on the refrigerating equipment or any associated parts, appropriate fire extinguishing equipment shall be available to hand. Have a dry powder or CO^2 fire extinguisher adjacent to the charging area.

⚠ IMPORTANT

No person carrying out work in relation to a REFRIGERATING SYSTEM which involves exposing any pipe work shall use any sources of ignition in such a manner that it may lead to the risk of fire or explosion. All possible ignition sources, including cigarette smoking, should be kept sufficiently far away from the site of installation, repairing, removing and disposal, during which refrigerant can possibly be released to the surrounding space. Prior to work taking place, the area around the equipment is to be surveyed to make sure that there are no flammable hazards or ignition risks. “No Smoking” signs shall be displayed.

⚠ IMPORTANT

Where electrical components are being changed, they shall be fit for the purpose and to the correct specification. At all times the manufacturer’s maintenance and service guidelines shall be followed. If in doubt, consult the manufacturer’s technical department for assistance.

The following checks shall be applied to installations using FLAMMABLE REFRIGERANTS:

– the actual REFRIGERANT CHARGE is in accordance with the room size within which the refrigerant containing parts are installed;

– the ventilation machinery and outlets are operating adequately and are not obstructed;

– if an indirect refrigerating circuit is being used, the secondary circuit shall be checked for the presence of refrigerant;

– marking to the equipment continues to be visible and legible. Markings and signs that are illegible shall be corrected;

– refrigerating pipe or components are installed in a position where they are unlikely to be exposed to any substance which may corrode refrigerant containing components, unless the components are constructed of materials which are inherently resistant to being corroded or are suitably protected against being so corroded.

⚠ IMPORTANT

Sealed electrical components shall be replaced.

⚠ IMPORTANT

Intrinsically safe components must be replaced.

***NOTE** – R-454B is an A2L refrigerant. The system installation must meet the following parameters based upon total refrigerant charge (line set included). TAmin (Total minimum conditioned area) is the minimum allowable conditioned area based upon the total system charge at sea level. Values must be multiplied by altitude adjustment factor at installed altitude.*

Qmin table refers to minimum airflow requirements during refrigerant leak mitigation by the refrigerant detection system, based upon total system charge.

See tables below.

TAmin Table

Charge (lb)	10.0	15.0	20.0	25.0	30.0
Charge (kg)	4.5	6.8	9.1	11.3	13.6
Minimum Conditioned Area (ft2)	149.9	224.9	299.9	374.8	449.8
Minimum Conditioned Area (m2)	13.9	20.9	27.9	34.8	41.8

***NOTE** – Multiply values in TAmin table by the Altitude Adjustment Factors to correct TAmin based on installed altitude.*

Altitude Adjustment Factor

Altitude (m)	0	200	400	600	800	1000	1200	1400	1600
Altitude (ft)	0	660	1310	1970	2620	3280	3940	4590	5250
Adj. Factor	1	1	1	1	1.02	1.05	1.04	1.1	1.12
Altitude (m)	1600	1800	2000	2200	2400	2600	2800	3000	3200
Altitude (ft)	5250	5910	6560	7220	7870	8530	9190	9840	10500
Adj. Factor	1.12	1.15	1.18	1.21	1.25	1.28	1.32	1.36	1.4

Qmin Table

Refrigerant Charge lb (kg)	CFM Required	Refrigerant Charge lb (kg)	CFM Required
5 (2.3)	135	18 (8.1)	487
6 (2.7)	162	19 (8.6)	514
7 (3.2)	189	20 (9.1)	541
8 (3.6)	216	21 (9.5)	568
9 (4.1)	244	22 (10)	595
10 (4.5)	271	23 (10.4)	622
11 (5)	298	24 (10.9)	649
12 (5.4)	325	25 (11.3)	676
13 (5.9)	352	26 (11.7)	704
14 (6.4)	379	27 (12.2)	731
15 (6.8)	406	28 (12.7)	758
16 (7.3)	433	29 (13.2)	785
17 (7.7)	460	30 (13.6)	812

General Information

These instructions are intended as a general guide and do not supersede national or local codes in any way. Consult authorities having jurisdiction before installation.

The EL18KCV is a high-efficiency split system air conditioner **with all-aluminum coil,** designed for use with R454B refrigerant only.

The EL18KCV units feature a variable capacity rotary compressor.

This unit must be installed with an approved indoor air handler or coil. See the Lennox EL18KCV Product Specifications bulletin (EHB) for approved indoor component match ups. These instructions are intended as a general guide and do not supersede local codes in any way. Consult authorities having jurisdiction before installation.

This outdoor unit is designed for use in systems that use the following refrigerant metering device:

- Thermal expansion valve (TXV)

IMPORTANT: Special procedures are required for cleaning the all-aluminum coil in this unit.

⚠ WARNING

Electrical Hazard
High Voltage
Wait 7 Minutes

Electrical components may hold charge. Do not remove this panel or service this area for 5 minutes after the power has been removed.

Model Number Identification

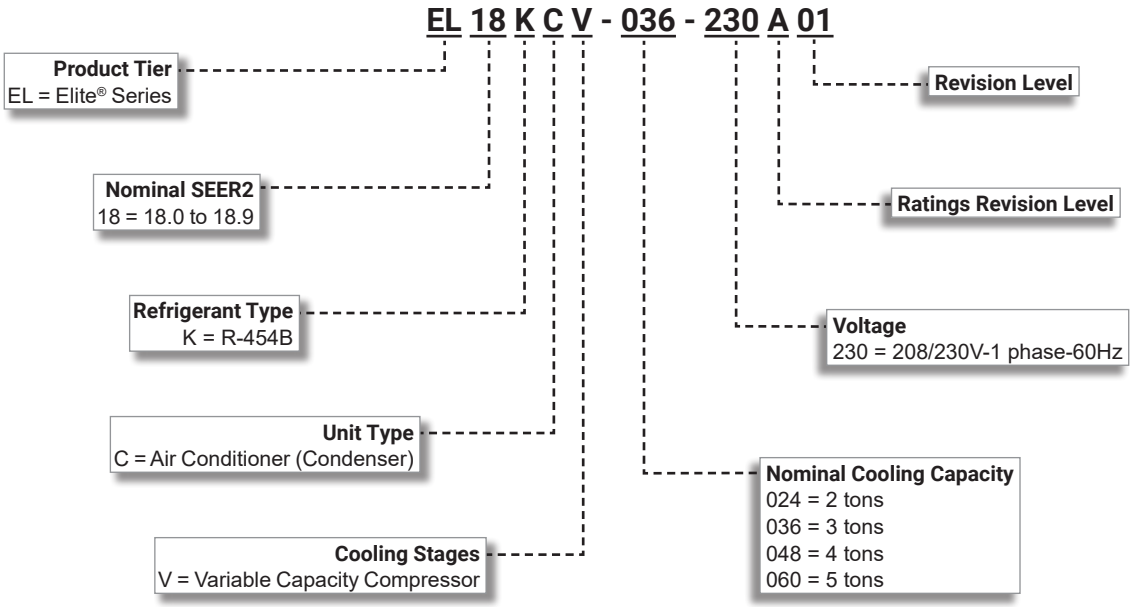

Typical Serial Number Identification

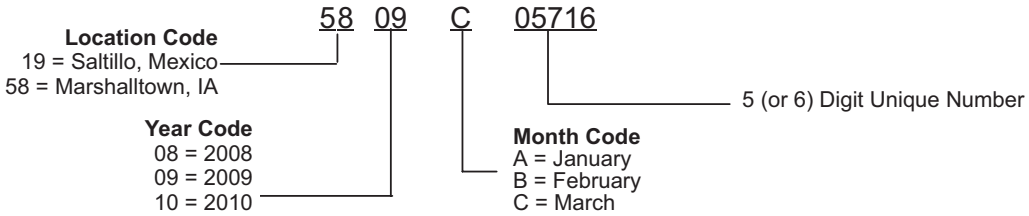

SPECIFICATIONS					ALL REGIONS
Size		**024**	**036**	**048**	**060**
Nominal Tonnage		2	3	4	5
Sound Rating Number Range	dBA	67-70	66-76	72-76	67-79
Connections (Sweat)	Liquid line (OD) - in.	3/8	3/8	3/8	3/8
	Suction line (OD) - in.	3/4	7/8	7/8	1-1/8
Compressor Type		Variable Rotary	Variable Rotary	Variable Rotary	Variable Rotary
Refrigerant (15 ft. Line Set)	[1] R-454B charge furnished	6 lbs. 3 oz.	6 lbs. 7 oz.	9 lbs. 8 oz.	9 lbs. 10 oz.
Refrigerant (30 ft. Line Set)	[1] R-454B charge furnished	6 lbs. 12 oz.	7 lbs. 0 oz.	10 lbs. 1 oz.	10 lbs. 3 oz.
Indoor Unit Expansion Valve (TXV)		**26Z70**	**26Z70**	**26Z71**	**26Z72**
Outdoor Coil	Net face area - ft.[2] Outer coil	23.63	23.63	23.63	23.33
	Inner coil	- - -	- - -	22.79	22.60
	Tube diameter - in.	5/16	5/16	5/16	5/16
	Rows	1	1	2	2
	Fins - in.	22	22	22	22
Outdoor Fan	HP	1/8	1/3	1/4	1/3
	Diameter - in.	22	22	22	26
	Blades	2	4	4	3
	Cfm	2840	3955	3660	4180
	Rpm	825	300 - 1200	825	300 - 1200
	Watts	130	258	290	201
Shipping Data - lbs.		250	265	270	270
ELECTRICAL DATA					
	Line voltage data (Volts-Phase-Hz)	208/230-1-60	208/230-1-60	208/230-1-60	208/230-1-60
	[2] Maximum overcurrent protection (MOCP) amps	25	35	50	60
	[3] Minimum circuit ampacity (MCA)	15	23.4	28.7	36.5
Compressor	Rated load amps	10.8	15.8	20.5	25.7
Fan Motor	Full load amps	0.74	2.6	1.7	2.6
OPTIONAL ACCESSORIES - ORDER SEPARATELY					
[5] Freezestat	3/8 in. **93G35**	•	•	•	•
Refrigerant Line Sets Liquid x Suction OD | Insulation Thickness | Length	3/8 x 3/4 | 3/8 | 20 ft. **89J56**	•			
	3/8 x 3/4 | 3/8 | 30 ft. **89J57**				
	3/8 x 3/4 | 3/8 | 50 ft. **89J59**				
	3/8 x 7/8 | 3/8 | 30 ft. **89J60**		•	•	
	3/8 x 7/8 | 3/8 | 50 ft. **89J62**				
	3/8 x 1-1/8 | 3/8 | 50 ft. **73P91**				•

NOTE - Extremes of operating range are plus 10% and minus 5% of line voltage.

1 Refrigerant charge sufficient for the line set length listed in parenthesis. For longer line set requirements see the Installation Instructions or unit Charging Label for information about line set length and additional refrigerant charge required.

2 HACR type breaker or fuse.

3 Refer to National or Canadian Electrical Code manual to determine wire, fuse and disconnect size requirements.

4 Used with the Lennox® S40 Smart Wi-Fi Thermostat for optional service diagnostics.

5 Freezestat is recommended for low ambient operation.

Unit Dimensions – Inches (mm)

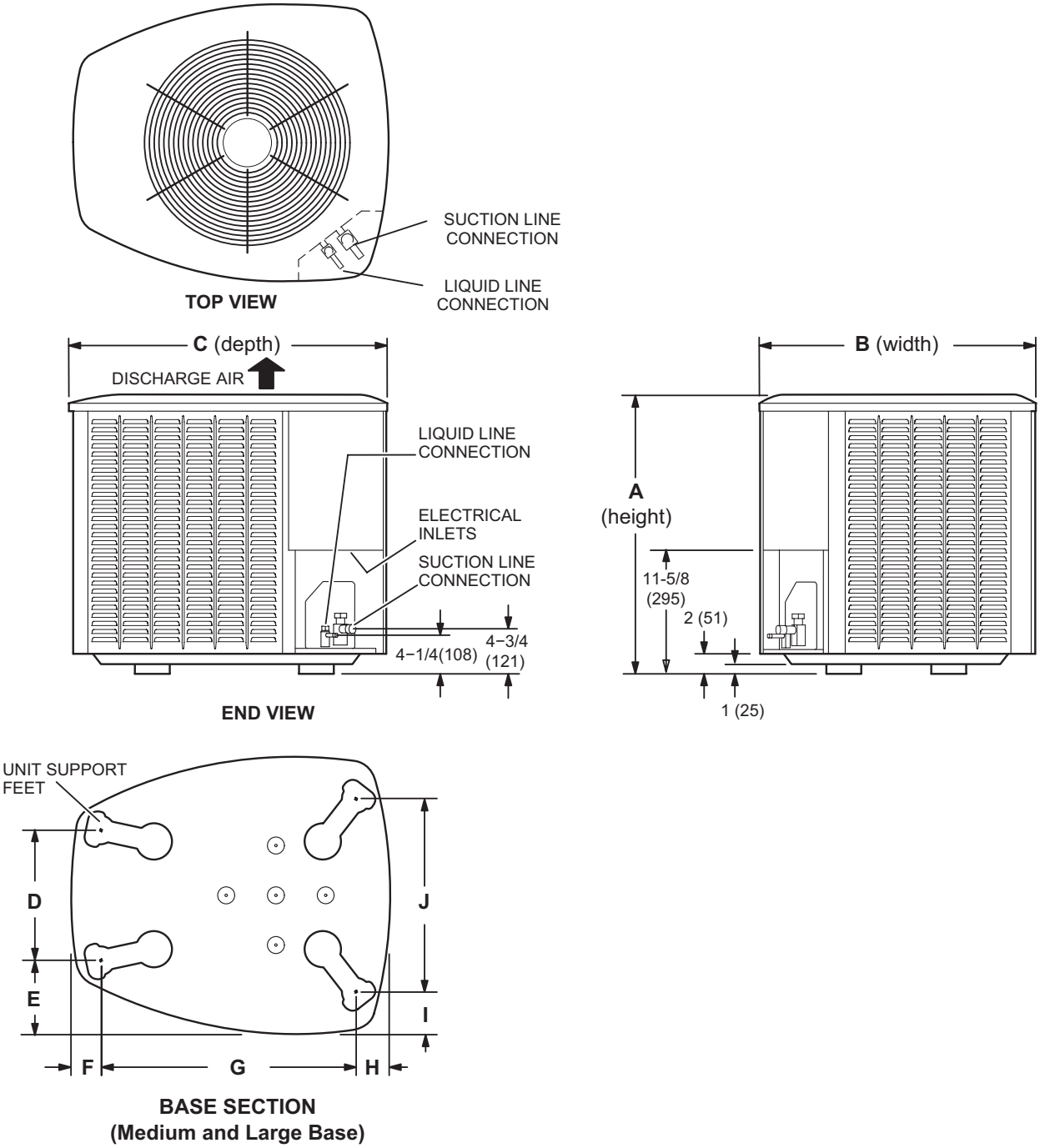

Size	A (Height)		B (Width)		C (Depth)		D		E		F		G		H		I		J	
	in.	mm	in.	mm	in.	mm	in.	mm	in.	mm	in.	mm	in.	mm	in.	mm	in.	mm	in.	mm
024	45	1143	30-1/2	775	35	889	13-7/8	352	7-3/4	197	3-1/4	83	27-1/8	689	3-5/8	92	4-1/2	114	20-5/8	524
036	45	1143	30-1/2	775	35	889	13-7/8	352	7-3/4	197	3-1/4	83	27-1/8	689	3-5/8	92	4-1/2	114	20-5/8	524
048	45	1143	30-1/2	775	35	889	13-7/8	352	7-3/4	197	3-1/4	83	27-1/8	689	3-5/8	92	4-1/2	114	20-5/8	524
060	39	991	35-1/2	902	39-1/2	1003	16-7/8	429	8-3/4	222	3-1/8	79	30-3/4	781	4-5/8	117	3-3/4	95	26-7/8	683

Typical Unit Parts Arrangement

CONTROL PANEL
EL18KCV-024, -048

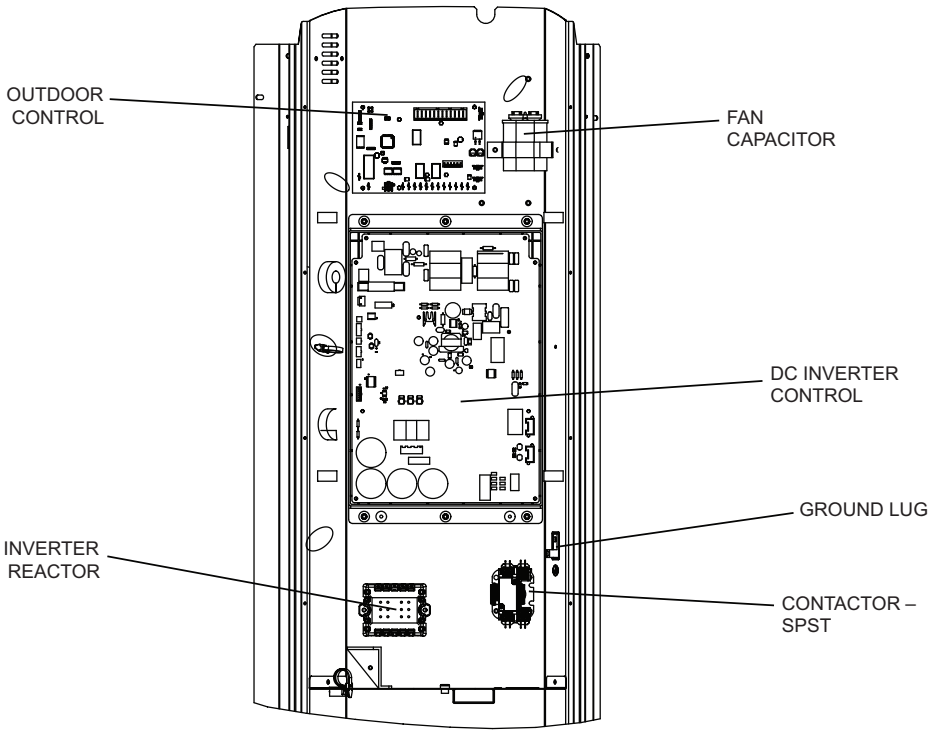

CONTROL PANEL
EL18KCV-036, -060

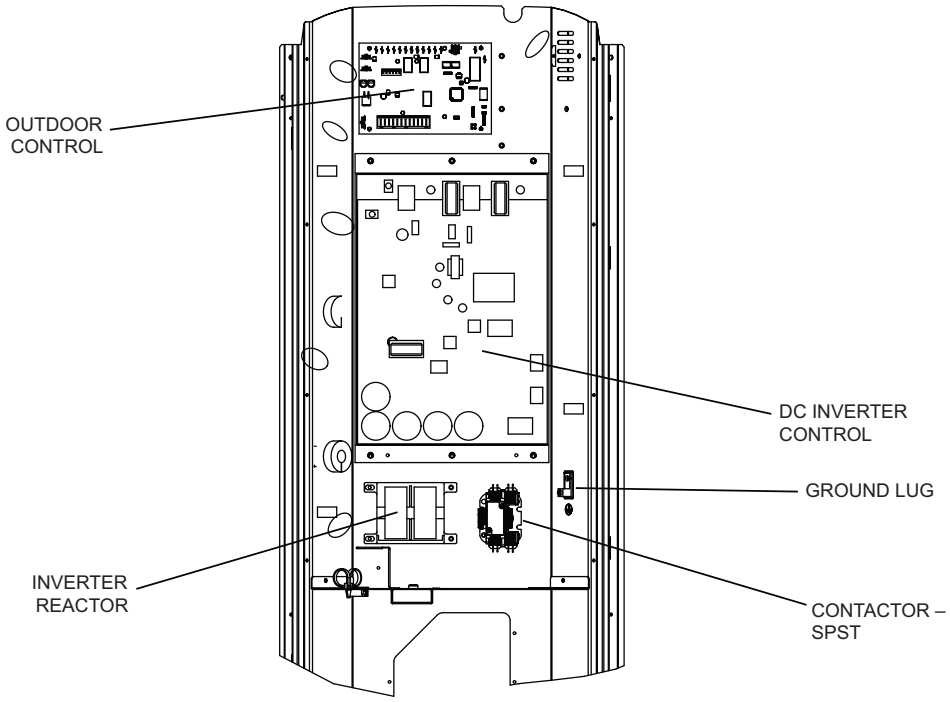

FIGURE 1. Control Panel Components

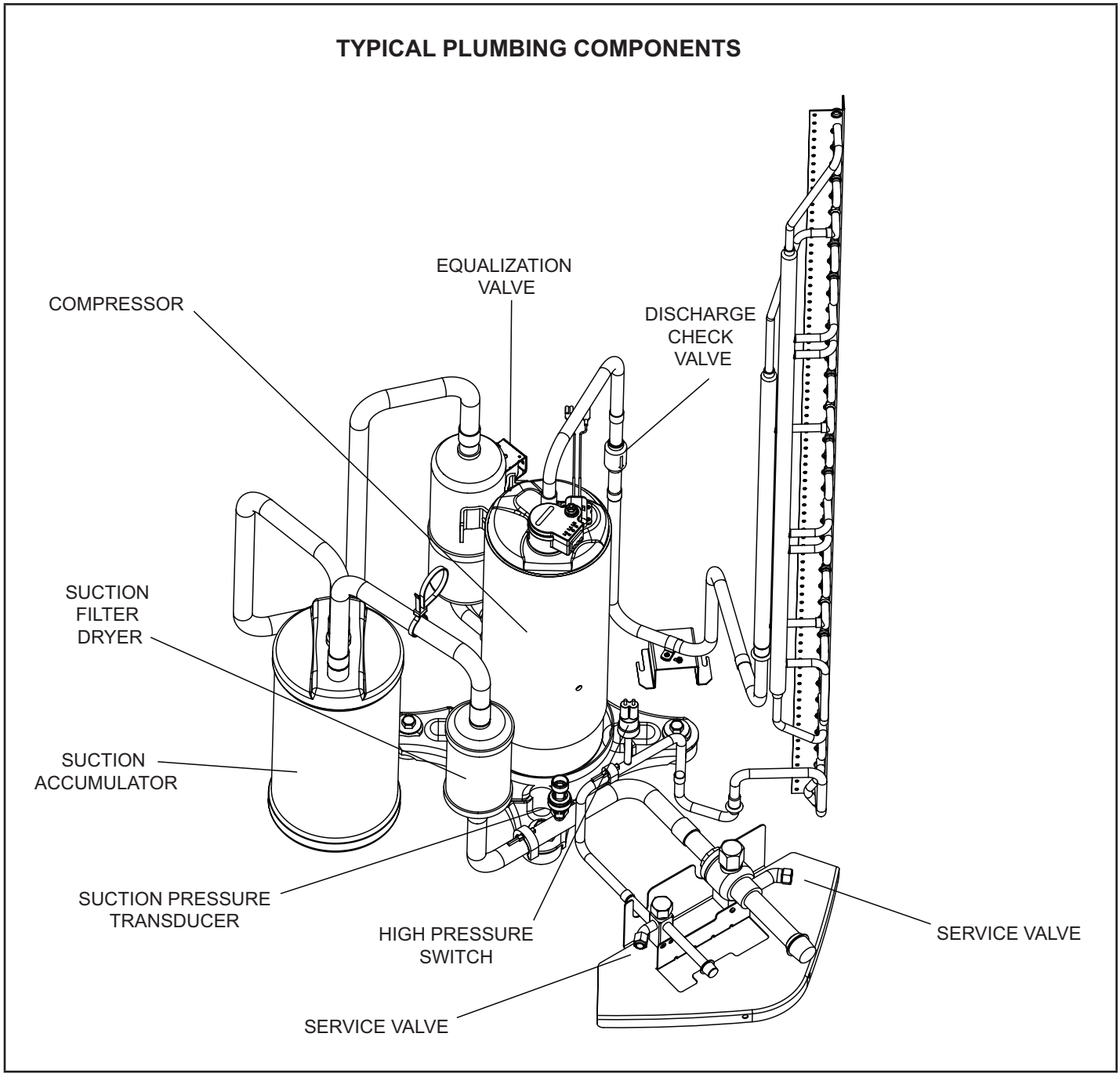

FIGURE 2. Component Locations – EL18KCV

Operating Gauge Set and Service Valves

TORQUE REQUIREMENTS

When servicing or repairing heating, ventilating, and air conditioning components, ensure the fasteners are appropriately tightened. Table 1 lists torque values for fasteners.

⚠ IMPORTANT

Only use Allen wrenches of sufficient hardness (50Rc - Rockwell Harness Scale minimum). Fully insert the wrench into the valve stem recess.

Service valve stems are factory-torqued (from 9 ft-lbs for small valves, to 25 ft-lbs for large valves) to prevent refrigerant loss during shipping and handling. Using an Allen wrench rated at less than 50Rc risks rounding or breaking off the wrench, or stripping the valve stem recess.

See the Lennox Service and Application Notes #C-08-1 for further details and information.

⚠ IMPORTANT

To prevent stripping of the various caps used, the appropriately sized wrench should be used and fitted snugly over the cap before tightening.

TABLE 1. Torque Requirements

Parts	Recommended Torque	
Service valve cap	8 ft.- lb.	11 NM
Sheet metal screws	16 ft.- lb.	2 NM
Machine screws #10	28 ft.- lb.	3 NM
Compressor bolts	90 in.- lb.	10 NM
Gauge port seal cap	8 ft.- lb.	11 NM

USING MANIFOLD GAUGE SET

When checking the system charge, only use a manifold gauge set that features low loss anti-blow back fittings.

Manifold gauge set used with R454B refrigerant systems must be capable of handling the higher system operating pressures. The gauges should be rated for use with pressures of 0 - 800 psig on the high side and a low side of 30” vacuum to 250 psig with dampened speed to 500 psi. Gauge hoses must be rated for use at up to 800 psig of pressure with a 4000 psig burst rating.

OPERATING SERVICE VALVES

The liquid and vapor line service valves are used for removing refrigerant, flushing, leak testing, evacuating, checking charge and charging. Each valve is equipped with a service port which has a factory-installed valve stem. Figure 4 provides information on access and operation of both angle and ball service valves

SERVICE VALVES ANGLE AND BALL

Operating Angle Type Service Valve:

1. Remove stem cap with an appropriately sized wrench.
2. Use a service wrench with a hex-head extension (3/16” for liquid line valve sizes and 5/16” for vapor line valve sizes) to back the stem out counterclockwise as far as it will go.

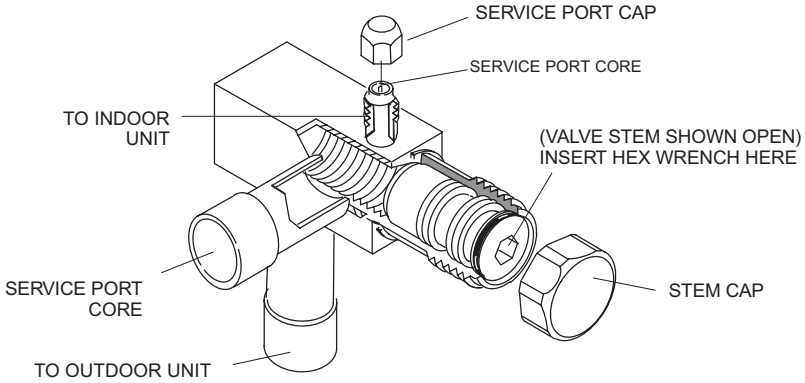

ANGLE-TYPE SERVICE VALVE (BACK-SEATED OPENED)

When service valve is **OPEN**, the service port is open to linE set, indoor and outdoor unit.

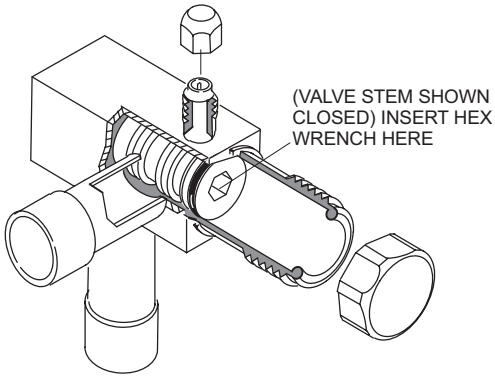

ANGLE-TYPE SERVICE VALVE (FRONT-SEATED CLOSED)

WHEN SERVICE VALVE IS **CLOSED**, THE SERVICE PORT IS OPEN TO THE LINE SET AND INDOOR UNIT.

Operating Ball Type Service Valve:

1. Remove stem cap with an appropriately sized wrench.
2. Use an appropriately sized wrenched to open. To open valve, roate stem counterclockwise 90°. To close rotate stem clockwise 90°.

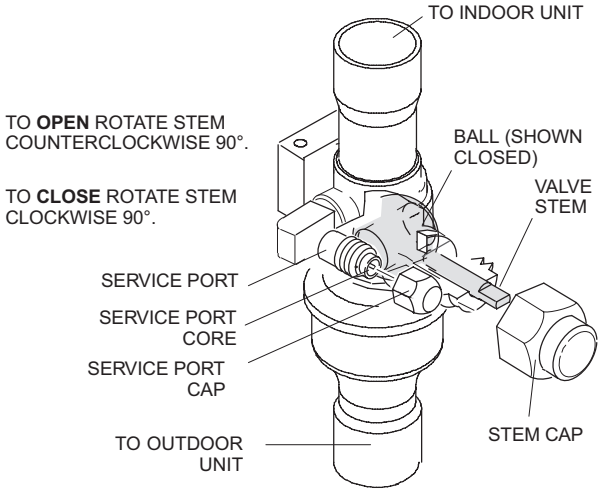

To Access Service Port:

A service port cap protects the service port core from contamination and serves as the primary leak seal.

1. Remove service port cap with an appropriately sized wrench.
2. Connect gauge set to service port.
3. When testing is completed, replace service port cap and tighten as follows:
   - With torque wrench: Finger tighten and torque cap per table 3.
   - Without torque wrench: Finger tighten and use an appropriately sized wrench to turn an additional 1/6 turn clockwise.

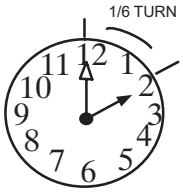

Reinstall Stem Cap:

Stem cap protects the valve stem from damage and serves as the primary seal. Replace the stem cap and tighten as follows:

- With Torque Wrench: Finger tighten and then torque cap per table 3.
- Without Torque Wrench: Finger tighten and use an appropriately sized wrench to turn an additional 1/12 turn clockwise.

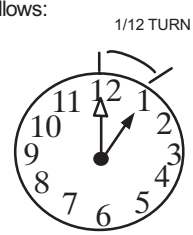

NOTE — A label with specific torque requirements may be affixed to the stem cap. If the label is present, use the specified torque.

FIGURE 3. Angle and Ball Service Valves

Unit Placement

See Unit Dimensions on page 8 for sizing mounting slab, platforms or supports.

⚠ CAUTION

In order to avoid injury, take proper precaution when lifting heavy objects..

POSITIONING CONSIDERATIONS

Consider the following when positioning the unit:

- Some localities are adopting sound ordinances based on the unit's sound level registered from the adjacent property, not from the installation property. Install the unit as far as possible from the property line.
- When possible, do not install the unit directly outside a window. Glass has a very high level of sound transmission. For proper placement of unit in relation to a window see the provided illustration in figure 6, detail A.

PLACING UNIT ON SLAB

When installing unit at grade level, the top of the slab should be high enough above grade so that water from higher ground will not collect around the unit. The slab should have a slope tolerance as described in figure 5, detail B.

***NOTE** – If necessary for stability, anchor unit to slab as described in figure 5, detail D.*

ELEVATING THE UNIT

Units are outfitted with elongated support feet as illustrated in figure 5, detail C.

If additional elevation is necessary, raise the unit by extending the height of the unit support feet. Use a 2-inch (50.8mm) Schedule 40 female threaded adapter to raise the height of the unit.

The specified coupling will fit snugly into the recessed portion of the feet. Use additional 2-inch (50.8mm) Schedule 40 male threaded adaptors which can be threaded into the female threaded adaptors to make additional adjustments to the level of the unit.

***NOTE** – Keep the height of extenders short enough to ensure a sturdy installation. If it is necessary to extend the height further than what is stable, consider a different type of field-fabricated framework that is sturdy enough for greater heights.*

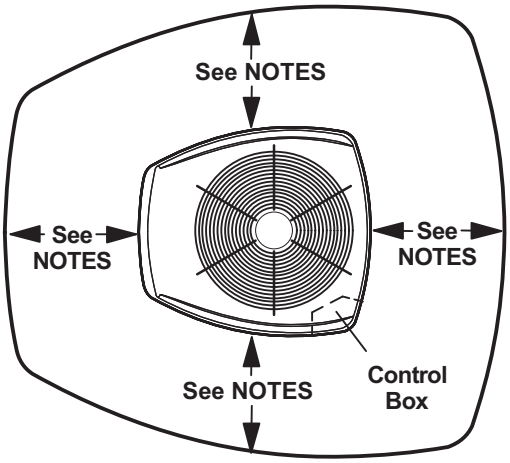

NOTES:

Service clearance of 30 in. (762 mm) must be maintained on one of the sides adjacent to the control box.

Clearance to one of the other three sides must be 36 in (914 mm).

Clearance to one of the remaining two sides may be 12 in. (305mm) and the final side may be 6 in.(152 mm).

A clearance of 24 in. (610 mm) must be maintained between two units.

48 in. (1219 mm) clearance required on top of unit.

NOTICE: Specific applications may require adjustment of the listed installation clearances to provide protection for the unit from physical damage or to avoid conditions which limit operating efficiency. (Example: Clearances may have to be increased to prevent snow or ice from falling on the top of the unit. Additional clearances may also be required to prevent air recirculation when the unit is installed under a deck or in another tight space.)

FIGURE 4. Installation Clearances

STABILIZING UNIT ON UNEVEN SURFACES

⚠ IMPORTANT

Unit Stabilizer Bracket Use (field-provided):

Always use stabilizers when unit is raised above the factory height. (Elevated units could become unstable in gusty wind conditions.)

Stabilizers may be used on factory height units when mounted on unstable an uneven surface..

1 - Remove the louvered panel from each side to expose the unit base.

2 - Install the brackets as illustrated in figure 5, detail D using conventional practices.

3 - Replace the panels after installation is complete.

ROOF MOUNTING

Locate the unit above a load-bearing wall or area of the roof that can adequately support the unit. Consult local codes for rooftop applications.

⚠ NOTICE

Roof Damage!

This system contains both refrigerant and oil. Some rubber roofing material may absorb oil, causing the rubber to swell. Bubbles in the rubber roofing material can cause leaks. Protect the roof surface to avoid exposure to refrigerant and oil during service and installation. Failure to follow this notice could result in damage to roof surface.

DETAIL A

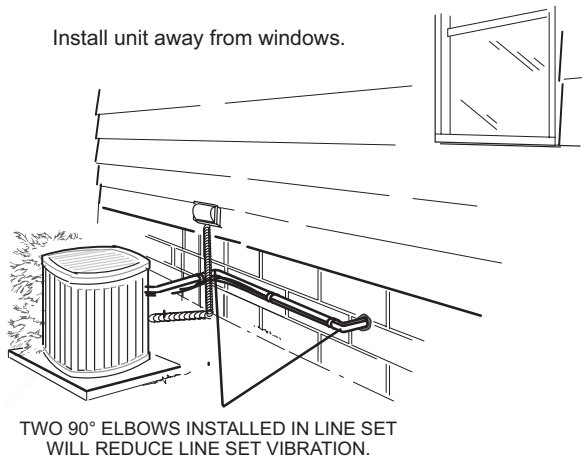

Outside Unit Placement

DETAIL B

INSTALL UNIT LEVEL OR, IF ON A SLOPE, MAINTAIN SLOPE TOLERANCE OF 2 DEGREES (OR 2 INCHES PER 5 FEET [50 MM PER 1.5 M]) AWAY FROM BUILDING STRUCTURE.

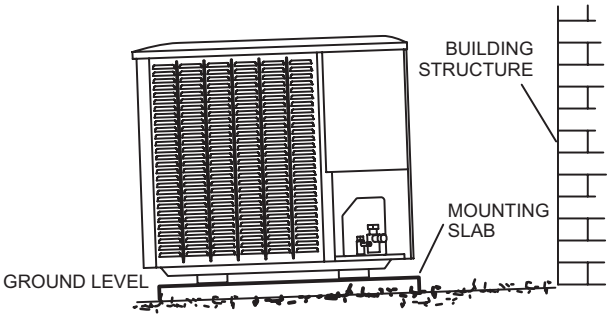

Slab Mounting at Ground Level

DETAIL C

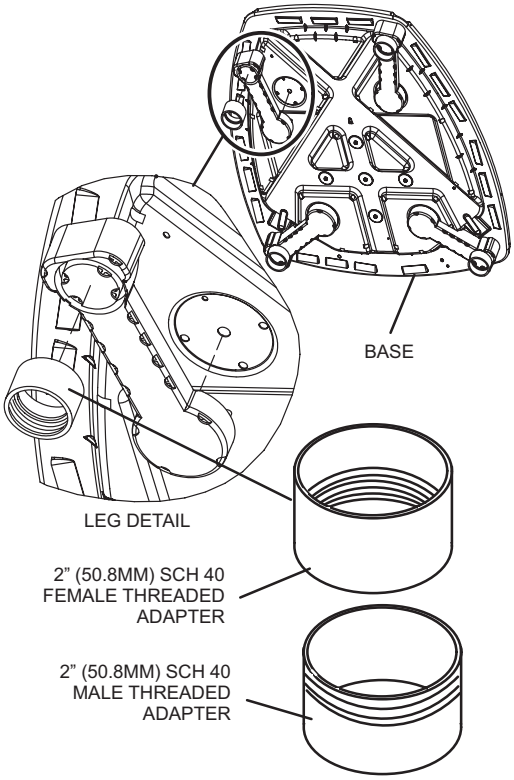

USE ADDITIONAL 2” SCH 40 MALE THREADED ADAPTERS WHICH CAN BE THREADED INTO THE FEMALE THREADED ADAPTERS TO MAKE ADDITIONAL ADJUSTMENTS TO THE LEVEL OF THE UNIT.

Elevated Slab Mounting using Feet Extenders

DETAIL D

Slab Side Mounting

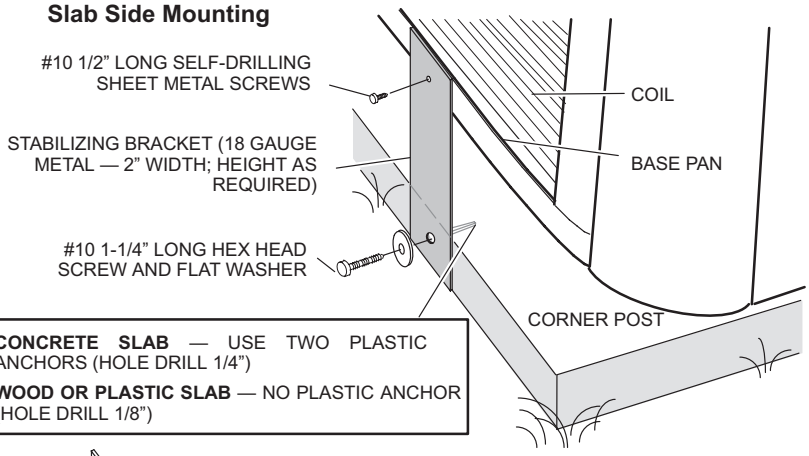

CONCRETE SLAB — USE TWO PLASTIC ANCHORS (HOLE DRILL 1/4”)

WOOD OR PLASTIC SLAB — NO PLASTIC ANCHOR (HOLE DRILL 1/8”)

Deck Top Mounting

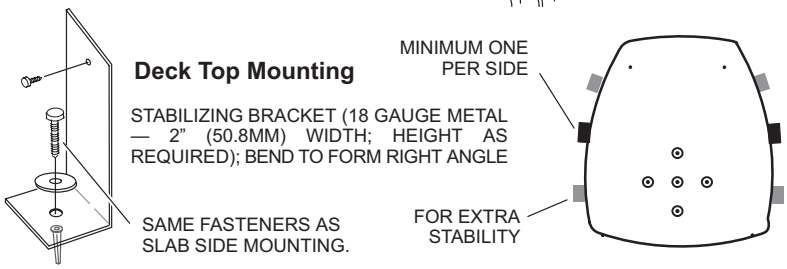

ONE BRACKET PER SIDE (MIN.); FOR EXTRA STABILITY, TWO BRACKETS PER SIDE, 2” (50.8MM) FROM EACH CORNER.

Stabilizing Unit on Uneven Surfaces

IMPORTANT - To help stabilize an outdoor unit, some installations may require strapping the unit to the pad using brackets and anchors commonly available in the marketplace.

FIGURE 5. Placement and Slab Mounting

Removing and Installing Panels

LOUVERED PANEL REMOVAL

Remove the louvered panels as follows:

1. Remove two screws, allowing the panel to swing open slightly.
2. Hold the panel firmly throughout this procedure. Rotate bottom corner of panel away from hinged corner post until lower three tabs clear the slots as illustrated in **detail B.**
3. Move panel down until lip of upper tab clears the top slot in corner post as illustrated in **detail A**.

LOUVERED PANEL INSTALLATION

Position the panel almost parallel with the unit as illustrated in **detail D** with the screw side as close to the unit as possible.

Then, in a continuous motion:

1. Slightly rotate and guide the lip of top tab inward as illustrated in **detail A** and **C**; then upward into the top slot of the hinge corner post.
2. Rotate panel to vertical to fully engage all tabs.
3. Holding the panel's hinged side firmly in place, close the right-hand side of the panel, aligning the screw holes.
4. When panel is correctly positioned and aligned, insert the screws and tighten.

Detail C

MAINTAIN MINIMUM PANEL ANGLE (AS CLOSE TO PARALLEL WITH THE UNIT AS POSSIBLE) WHILE INSTALLING PANEL.

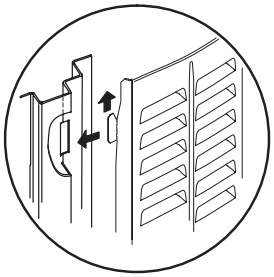

IMPORTANT! DO NOT ALLOW PANELS TO HANG ON UNIT BY TOP TAB. TAB IS FOR ALIGNMENT AND NOT DESIGNED TO SUPPORT WEIGHT OF PANEL.

PANEL SHOWN SLIGHTLY ROTATED TO ALLOW TOP TAB TO EXIT (OR ENTER) TOP SLOT FOR REMOVING (OR INSTALLING) PANEL.

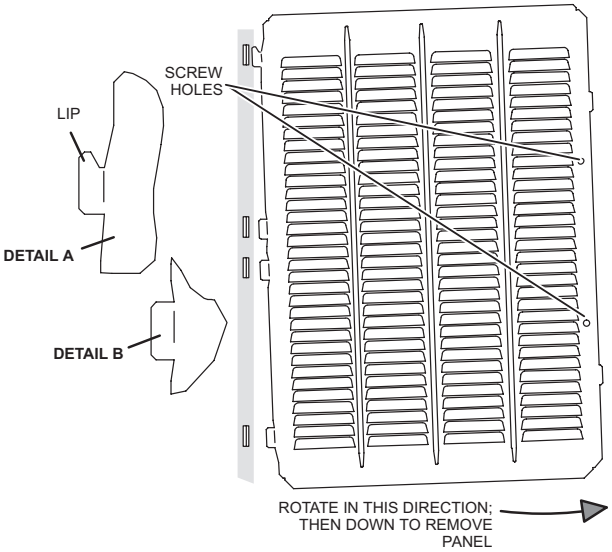

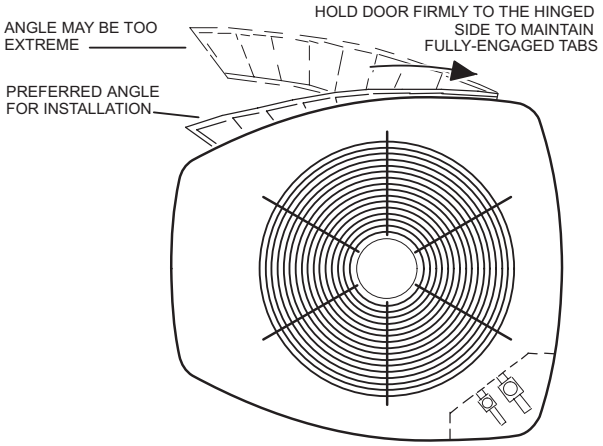

FIGURE 6. Removing and Installing Panels

New or Replacement Line Set

⚠ IMPORTANT

If this unit is being matched with an approved line set that was previously charged with mineral oil, the line set must be flushed prior to installation. Take care to empty all existing traps. Polyvinyl ether (PVE) oils are used in Lennox units charged with R454B refrigerant. Residual mineral oil can act as an insulator, preventing proper heat transfer. It can also clog the expansion device and reduce system performance and capacity. Failure to properly flush the system per this instruction and the detailed Installation and Service Procedures manual will void the warranty.

Flush the existing line set per the following instructions. For more information, refer to the Installation and Service Procedures manual available on LennoxPros.com. CAUTION - DO NOT attempt to flush and re-use existing line sets or indoor coil when the system contains contaminants (i.e., compressor burn out).

If a new line set is being installed, size the piping per table 2

TABLE 2

REFRIGERANT LINE SET – INCHES (MM)					
Model	Valve Field Connections		Recommended Line Set		
	Liquid Line	Vapor Line	Liquid Line	Vapor Line	L15 Line Sets
-024	3/8 in. (10 mm)	3/4 in. (19 mm)	3/8 in. (10 mm)	3/4 in. (19 mm)	L15-41 15 ft. - 50 ft. (4.6 m - 15 m)
-036	3/8 in. (10 mm)	7/8 in. (22 mm)	3/8 in. (10 mm)	7/8 in. (22 mm)	L15-65 15 ft. - 50 ft. (4.6 m - 15 m)
-048					
-060	3/8 in. (10 mm)	1-1/8 in. (28 mm)	3/8 in. (10 mm)	1-1/8 in. (28 mm)	Field Fabricated
NOTE - Some applications may require a field-provided 7/8" to 1-1/8" adapter.					

NOTE *- When installing refrigerant lines longer than 50 feet, refer to the Refrigerant Piping Design and Fabrication Guidelines manual available on LennoxPros.com (Corp. 9351-L9), or contact the Technical Support Department Product Application group for assistance.*

NOTE *- For new or replacement line set installation, refer to Service and Application Note - Corp. 9112-L4 (C-91-4).*

Line Set Joints - Furnace Application

Evaporator primary line set joints in all applications shall have a line set joint sleeve.

Evaporator primary line sets should not have additional joints not covered by line set joint sleeve.

If additional joints are present, the system installation shall comply with one of the options below:

Option 1 - Furnace is installed as a direct vent appliance;

Option 2 - Furnace/Evaporator installation is in a space greater than the minimum conditioned area (Amin);

Option 3 - Furnace/Evaporator installation is connected to a space greater than the minimum conditioned area (Amin) through an opening of at least 15 in² (4-inch diameter hole equivalent) located below the level of the furnace burners;

Option 4 - Have a second refrigerant detection sensor installed below the level of the burners (see Secondary Sensor Installation section).

Multiple Systems Installed in Same Space

For any A2L refrigerant system with additional joints not covered by line set joint sleeves, each system in the same space must have refrigerant detection sensor installed below the level of the burners (see Secondary Sensor Installation section). If all the systems in the same space are installed with direct vent application, then additional refrigerant detection sensor is not needed

Secondary Sensor Installation

If secondary refrigerant sensor is required, it shall be mounted as follows:

Upflow Applications: Mounted on an unused side furnace return air connection at least 9 inches above the floor and within 9 inches from front of furnace.

Downflow Applications: Mounted on one side of the evaporator coil 9 inches above the floor and within 9 inches from front of coil.

Horizontal Applications: Mounted on the bottom side return furnace air connection within 9 inches of both the blower deck and front of furnace.

Connect the refrigerant sensor to the second sensor input on the RDS Control. Refer to the instructions provided with the sensor or the RDS controller to enable the second sensor.

⚠ WARNING

When using a high pressure gas such as nitrogen to pressurize a refrigeration or air conditioning system, use a regulator that can control the pressure down to 1 or 2 psig (6.9 to 13.8 kPa).

⚠ WARNING

Refrigerant can be harmful if it is inhaled. Refrigerant must be used and recovered responsibly.

Failure to follow this warning may result in personal injury or death.

⚠ WARNING

Fire, Explosion and Personal Safety hazard. Failure to follow this warning could result in damage, personal injury or death.

Never use oxygen to pressurize or purge refrigeration lines. Oxygen, when exposed to a spark or open flame, can cause fire and/or an explosion, that could result in property damage, personal injury or death.

⚠ WARNING

Polyvinyl ether (PVE) oils used with R454B refrigerant absorb moisture very quickly. It is very important that the refrigerant system be kept closed as much as possible. DO NOT remove line set caps or service valve stub caps until you are ready to make connections.

The EL18KCV is a variable-capacity cooling system utilizing variable speed compressor technology. With the variable speed compressor and variable pumping capacity, additional consideration must be given to refrigerant piping sizing and application. The guidelines below are to be used exclusively for the EL18KCV systems.

COOLING SYSTEM (R454B)

- Total equivalent length equals 180 feet (piping and all fittings included).

NOTE *– Length is general guide. Lengths may be more or less, depending on remaining system design factors.*

- Maximum linear (actual) length = 150 feet.
- Maximum linear liquid lift = 60 feet.

***NOTE** – Maximum lifts are dependent on total length, number of elbows, etc. that contribute to total pressure drop.*

- Maximum length vapor riser = 60 feet.
- **Up to 50 Linear Feet:** Use rated line sizes listed in table 1.
- **Between 51 and 150 Linear Feet:** Crankcase heater and nonbleed port TXV factory installed. No additional components required. Vertical vapor riser must be sized to the vapor riser listed in the table 2 on systems with line sets longer than 51 feet. Use tables 2 and 3 to determine the correct liquid and vapor line sizes.
- **Over 150 Linear Feet:** not recommended.
- Additional oil is not required for systems with line lengths up to 150 feet.

SUCTION TRAPS

For systems with the outdoor unit 5 - 60 feet above the indoor unit, one trap must be installed at the bottom of the suction riser.

TABLE 3. Standard Refrigerant Line Set – Up to 50 Linear Feet in Length

Inches (mm)					
EL18KCV [1]	Valve Size Connections		Recommend Line Sets		
	Liquid Line	Suction Line	L15 Line Set Model	Line Set Length	Catalog Number
-024	3/8" (10 mm)	3/4" (19 mm)	L15-41-30	30 feet (9.1 m)	89J60
-036 -048	3/8" (10 mm)	7/8" (22 mm)	L15-65-40	40 feet (12.2 m)	89J61
			L15-65-50	50 feet (15.2 m)	89J62
-060	3/8" (10 mm)	1-1/8" (29 mm) [2]	Field-fabricated		

[1] Applicable to all minor revision numbers unless otherwise specified.

[2] Some applications may require a field-provided 1-1/8" to 7/8" adapter.

TABLE 4. EL18KCV Line Set Guidelines – 51 to 150 Linear Feet in Length

Model	Maximum Total Equivalent Length (ft)	Maximum Linear (actual) Length (ft)	Maximum Vapor Riser (ft)	Maximum Linear Liquid Lift (ft)	Preferred Vapor Line Sizes for Horizontal Runs	Required Vapor Riser Size
-024	180	150	60	60	7/8"	5/8"
-036	180	150	60	60	7/8"	5/8"
-048	180	150	60	60	7/8"	5/8"
-060	180	150	60	60	7/8"	5/8"

TABLE 5. Liquid Line Diameter Selection Table

Unit	Line Size	Total Linear Length (feet)						Max Elevation (ft)
		25	50	75	100	125	150	
-024	5/16"	25	50	55	48	40	33	
	3/8"	25	50	60	60	60	60	
-035	3/8"	25	50	60	56	51	45	
	1/2"	25	50	60	60	60	60	
-048	3/8"	25	50	50	41	31	22	
	1/2"	25	50	60	60	60	60	
-060	3/8"	25	50	36	22	8	NR	
	1/2"	25	50	60	60	60	59	

***NOTE** - Shaded rows indicate rated liquid line size.*

F. Find your unit on the left side of the table.

G. Start with the rated liquid line size (shaded row) on the outdoor unit.

H. Select the actual Total Linear Length of your system shown at the top of the table.

I. The elevation listed in the table is the maximum allowed for the liquid line listed.

J. Select or consider the larger liquid line size shown in the table if the elevation does not meet your requirements.

NOTE - *For new or replacement set installation, refer to Service and Application Note - Corp. 9112-L4 (C-91-4).*

LINE SET

IMPORTANT — Refrigerant lines must not contact structure.

INSTALLATION

Line Set Isolation — The following illustrations are examples of proper refrigerant line set isolation:

REFRIGERANT LINE SET — TRANSITION FROM VERTICAL TO HORIZONTAL

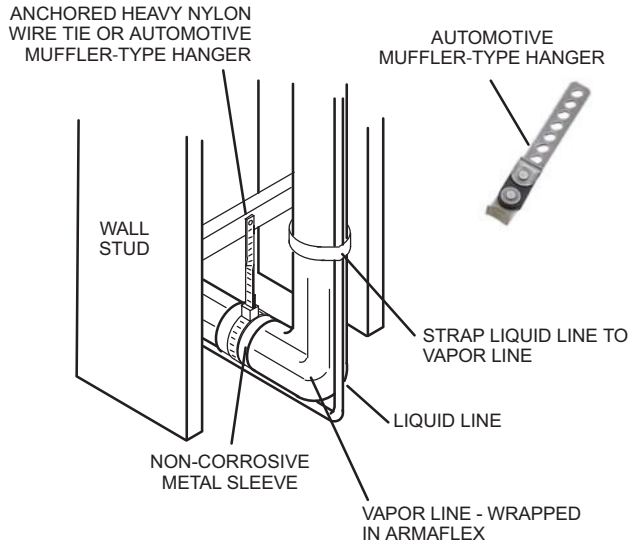

REFRIGERANT LINE SET — INSTALLING HORIZONTAL RUNS

To hang line set from joist or rafter, use either metal strapping material or anchored heavy nylon wire ties.

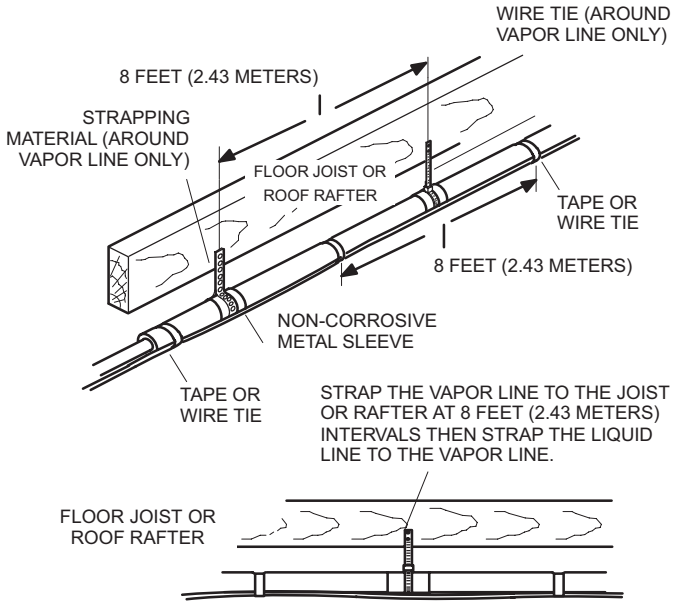

REFRIGERANT LINE SET — INSTALLING VERTICAL RUNS (NEW CONSTRUCTION SHOWN)

NOTE — Insulate liquid line when it is routed through areas where the surrounding ambient temperature could become higher than the temperature of the liquid line or when pressure drop is equal to or greater than 20 psig.

IMPORTANT — Refrigerant lines must not contact wall

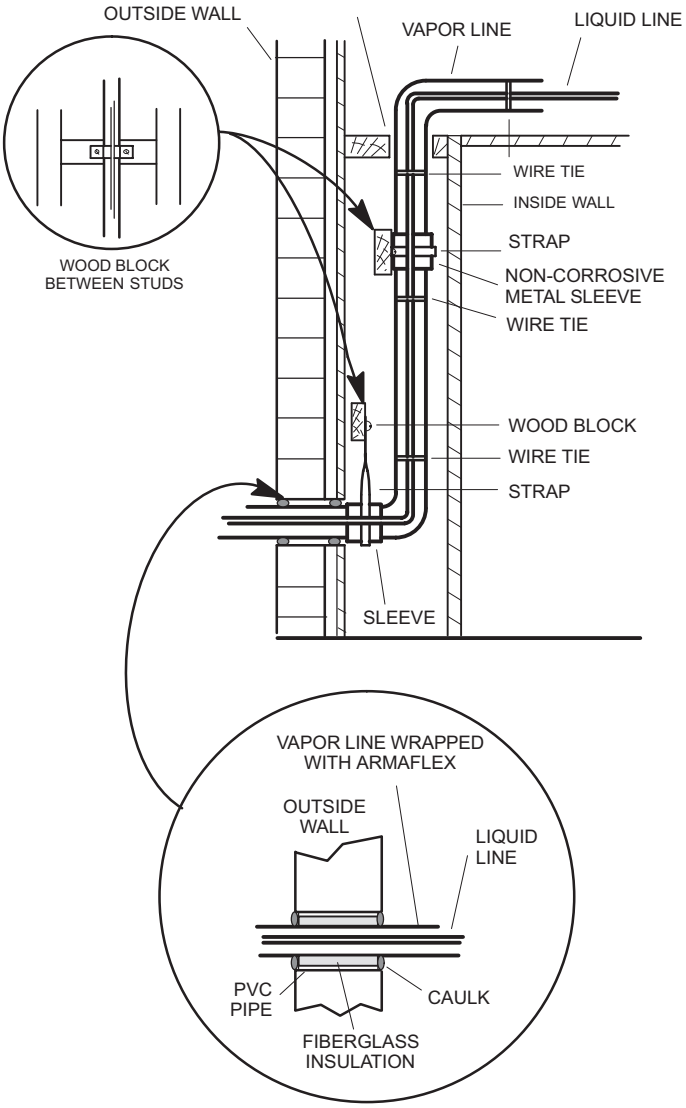

***NOTE** — Similar installation practices should be used if line set is to be installed on exterior of outside wall.*

WARNING — Polyvinyl (PVE) oils used with R-454B refrigerant absorb moisture very quickly. It is very important that the refrigerant system be kept closed as much as possible. DO NOT remove line set caps or service valve stub caps until you are ready to make connections.

FIGURE 7. Line Set Installation

Brazing Connections

Use the procedures outlined in figures 8 and 9 for brazing line set connections to service valves.

⚠ WARNING

Danger of fire. Bleeding the refrigerant charge from only the high side may result in pressurization of the low side shell and suction tubing. Application of a brazing torch to a pressurized system may result in ignition of the refrigerant and oil mixture. Check the high and low pressures before applying heat.

⚠ WARNING

When using a high pressure gas such as nitrogen to pressurize a refrigeration or air conditioning system, use a regulator that can control the pressure down to 1 or 2 psig (6.9 to 13.8 kPa).

⚠ CAUTION

Brazing alloys and flux contain materials which are hazardous to your health.

Avoid breathing vapors or fumes from brazing operations. Perform operations only in well-ventilated areas.

Wear gloves and protective goggles or face shield to protect against burns.

Wash hands with soap and water after handling brazing alloys and flux.

⚠ IMPORTANT

Allow braze joint to cool before removing the wet rag from the service valve. Temperatures above 250ºF can damage valve seals.

⚠ IMPORTANT

Use silver alloy brazing rods with 5% minimum silver alloy for copper-to-copper brazing. Use 45% minimum alloy for copper-to-brass and copper-to-steel brazing.

⚠ WARNING

Fire, Explosion and Personal Safety hazard. Failure to follow this warning could result in damage, personal injury or death.

Never use oxygen to pressurize or purge refrigeration lines. Oxygen, when exposed to a spark or open flame, can cause fire and/or an explosion, that could result in property damage, personal injury or death.

⚠ IMPORTANT

Braze-free fittings must conform with UL207 or ISO14903 (latest edition).

1 PIPING PANEL REMOVAL AND LINE SET PREPARATION

Remove piping panel for easier access to service valves. Cut ends of the refrigerant lines square (free from nicks or dents) and debur the ends. The pipe must remain round. Do not crimp end of the line.

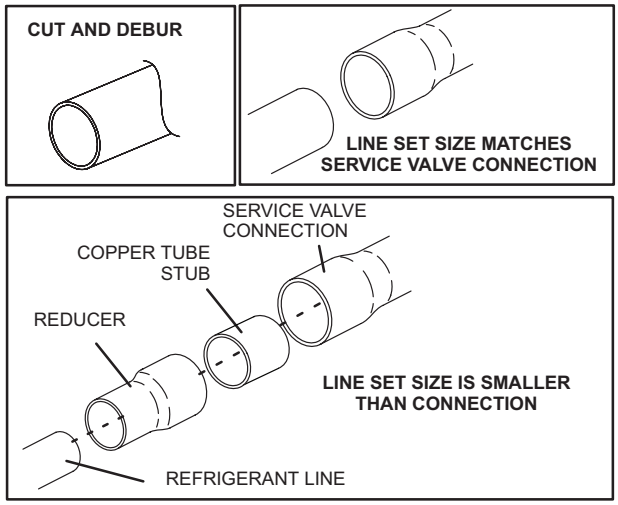

DO NOT CRIMP SERVICE VALVE CONNECTOR WHEN PIPE IS SMALLER THAN CONNECTION

2 CAP AND CORE REMOVAL

Remove service cap and core from both the suction and liquid line service ports.

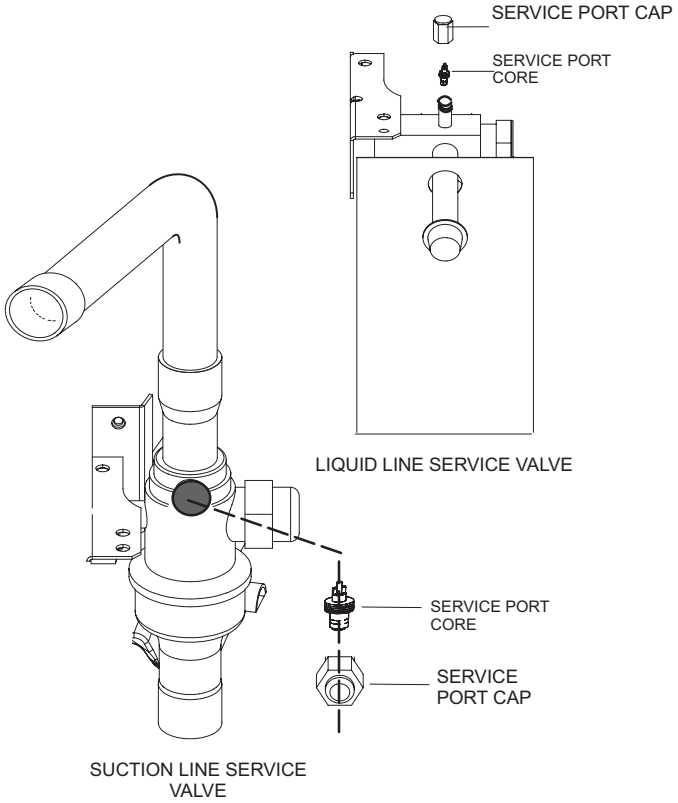

3 ATTACH THE MANIFOLD GAUGE SET FOR BRAZING LIQUID AND SUCTION LINE SERVICE VALVES

A. Connect gauge set low pressure side to liquid line service valve (service port).

B. Connect gauge set center port to bottle of nitrogen with regulator.

C. With valve core removed from the suction line service port, nitrogen flow will have an exit point.

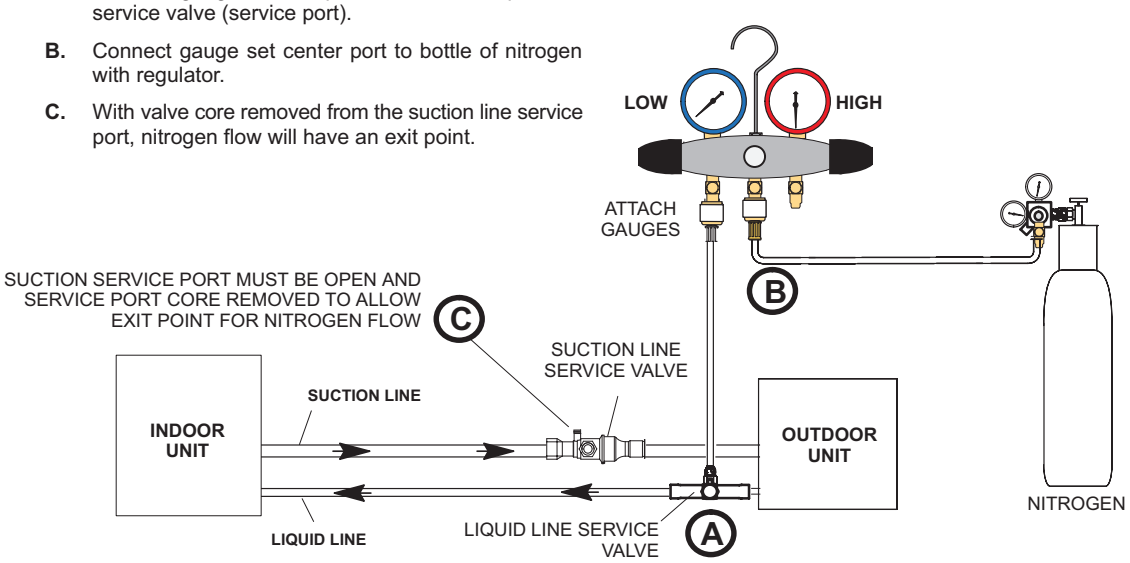

FIGURE 8. Brazing Procedures

4 WRAP SERVICE VALVES

To help protect service valve seals during brazing, wrap water-saturated cloths around service valve bodies and copper tube stubs. Use additional water-saturated cloths underneath the valve body to protect the base paint.

5 FLOW NITROGEN

Flow regulated nitrogen (at 1 to 2 psig) through the refrigeration gauge set into the valve stem port connection on the liquid service valve and out of the suction / vapor valve stem port. See steps **3A, 3B** and **3C** on manifold gauge set connections.

6 BRAZE LINE SET

Wrap both service valves with water-saturated cloths as illustrated here and as mentioned in step 4, before brazing to line set. Cloths must remain water-saturated throughout the brazing and cool-down process.

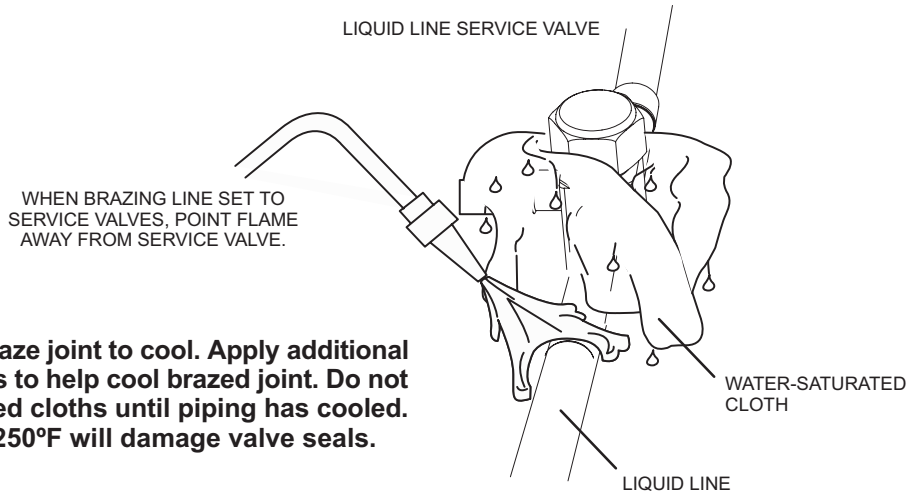

IMPORTANT - Allow braze joint to cool. Apply additional water-saturated cloths to help cool brazed joint. Do not remove water-saturated cloths until piping has cooled. Temperatures above 250ºF will damage valve seals.

WARNING

FIRE, PERSONAL INJURY, OR PROPERTY DAMAGE may result if you do not wrap a water-saturated cloth around both liquid and suction line service valve bodies and copper tube stub while brazing the line set! The braze, when complete, must be quenched with water to absorb any residual heat.

Do not open service valves until refrigerant lines and indoor coil have been leak-tested and evacuated. Refer to Installation and Service Procedures manual found on LennoxPros.com.

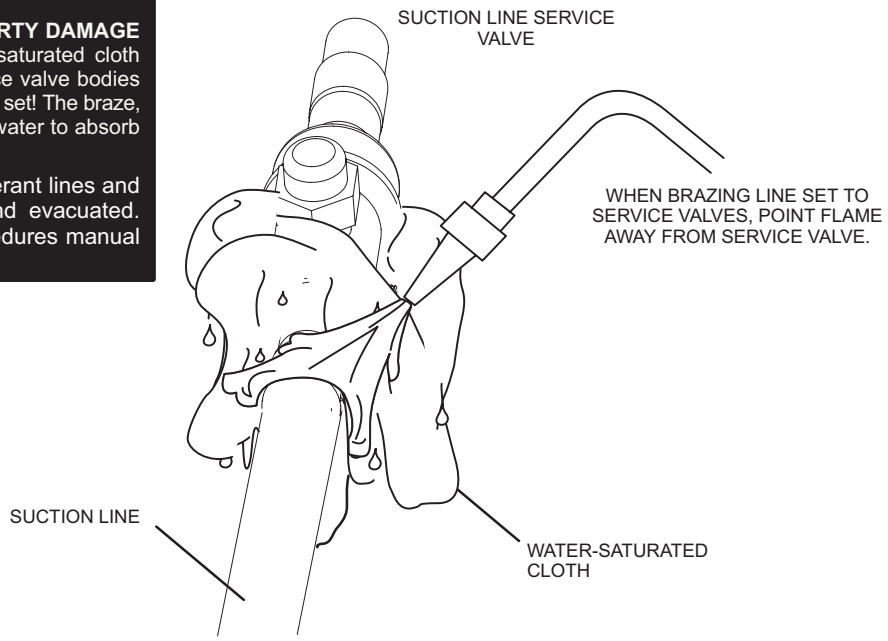

7 PREPARATION FOR NEXT STEP

Disconnect manifold gauge set from service ports after all connections have been brazed. Apply additional water-saturated cloths to both service valves to cool piping. Once piping is cool, remove all water-saturated cloths.

FIGURE 9. Brazing Procedures (Cont'd)

Flushing Line Set and Indoor Coil

1A TYPICAL EXISTING FIXED ORIFICE REMOVAL PROCEDURE (UNCASED COIL SHOWN)

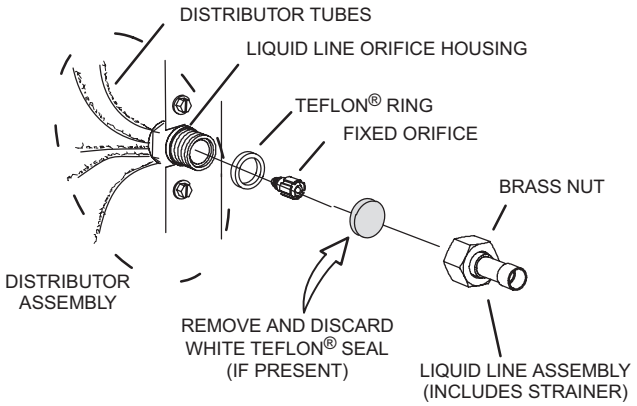

A On fully cased coils, remove the coil access and plumbing panels.

B Remove any shipping clamps holding the liquid line and distributor assembly.

C Using two wrenches, disconnect liquid line from liquid line orifice housing. Take care not to twist or damage distributor tubes during this process.

D Remove and discard fixed orifice, valve stem assembly if present and Teflon® washer as illustrated above.

E Use a field-provided fitting to temporarily reconnect the liquid line to the indoor unit's liquid line orifice housing.

OR

1B TYPICAL EXISTING EXPANSION VALVE REMOVAL PROCEDURE (UNCASED COIL SHOWN)

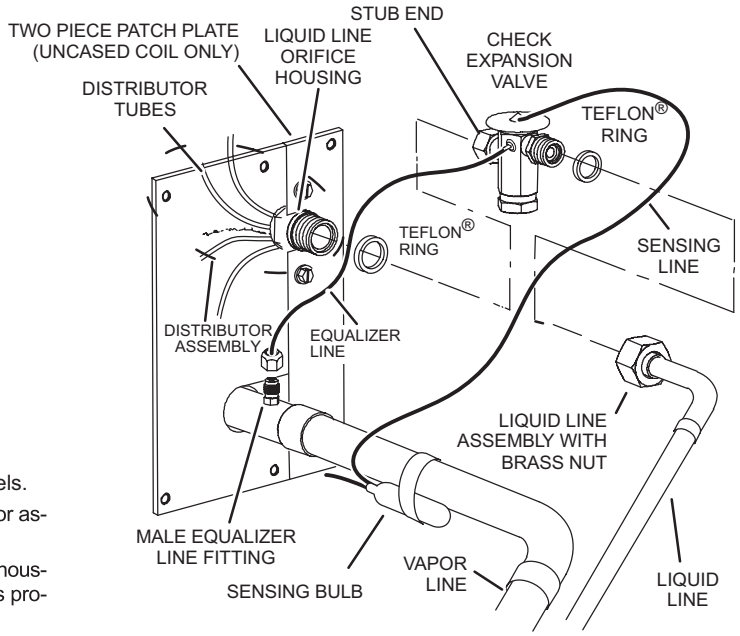

A On fully cased coils, remove the coil access and plumbing panels.

B Remove any shipping clamps holding the liquid line and distributor assembly.

C Disconnect the equalizer line from the check expansion valve equalizer line fitting on the vapor line.

D Remove the vapor line sensing bulb.

E Disconnect the liquid line from the check expansion valve at the liquid line assembly.

F Disconnect the check expansion valve from the liquid line orifice housing. Take care not to twist or damage distributor tubes during this process.

G Remove and discard check expansion valve and the two Teflon® rings.

H Use a field-provided fitting to temporary reconnect the liquid line to the indoor unit's liquid line orifice housing.

2 CONNECT GAUGES AND EQUIPMENT FOR FLUSHING PROCEDURE

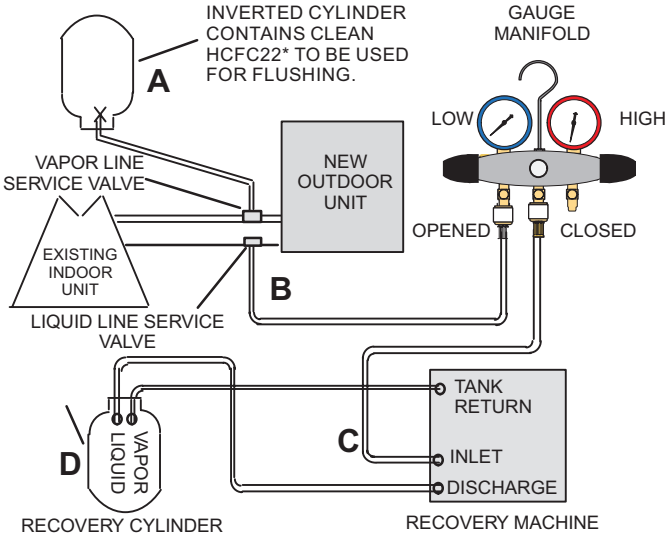

A Inverted R-454B cylinder with clean refrigerant* to the vapor service valve.

B R-454B gauge set (low side) to the liquid line valve.

C R-454B gauge set center port to inlet on the recovery machine with an empty recovery tank to the gauge set.

D Connect recovery tank to recovery machines per machine instructions.

3 FLUSHING LINE SET

The line set and indoor unit coil must be flushed with at least the same amount of clean refrigerant* that previously charged the system. Check the charge in the flushing cylinder before proceeding.

A Set the recovery machine for liquid recovery and start the recovery machine. Open the gauge set valves to allow the recovery machine to pull a vacuum on the existing system line set and indoor unit coil.

B Invert the cylinder of clean R-454B* and open its valve to allow liquid refrigerant to flow into the system through the vapor line valve. Allow the refrigerant to pass from the cylinder and through the line set and the indoor unit coil before it enters the recovery machine.

C After all of the liquid refrigerant has been recovered, switch the recovery machine to vapor recovery so that all of the R-454B vapor is recovered. Allow the recovery machine to pull the system down to 0.

D Close the valve on the inverted R-454B drum and the gauge set valves. Pump the remaining refrigerant out of the recovery machine and turn the machine off.

***IMPORTANT - Clean refrigerant is any refrigerant in a system that has not had compressor burn out. If the system has experienced burn out, it is recommended that the existing line set and indoor coil be replaced.**

FIGURE 10. Removing Metering Device and Flushing

FLUSHING LINE SET AND INDOOR COIL (2 OF 2)

4 TYPICAL NEW CHECK EXPANSION VALVE INSTALLATION PROCEDURE

THIS OUTDOOR UNIT IS DESIGNED FOR USE IN SYSTEMS THAT USE A CHECK EXPANSION VALVE METERING DEVICE. SEE THE UNIT *PRODUCT SPECIFICATIONS* FOR APPROVED EXPANSION VALVE KIT MATCH-UPS AND APPLICATION INFORMATION.

THE EXPANSION VALVE UNIT CAN BE INSTALLED INTERNAL OR EXTERNAL TO THE INDOOR COIL. IN APPLICATIONS WHERE AN UNCASED COIL IS BEING INSTALLED IN A FIELD-PROVIDED PLENUM, INSTALL THE CHECK EXPANSION VALVE IN A MANNER THAT WILL PROVIDE ACCESS FOR FIELD SERVICING OF THE EXPANSION VALVE. REFER TO BELOW ILLUSTRATION FOR REFERENCE DURING INSTALLATION OF EXPANSION VALVE UNIT.

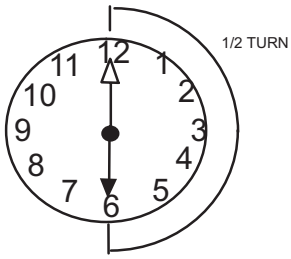

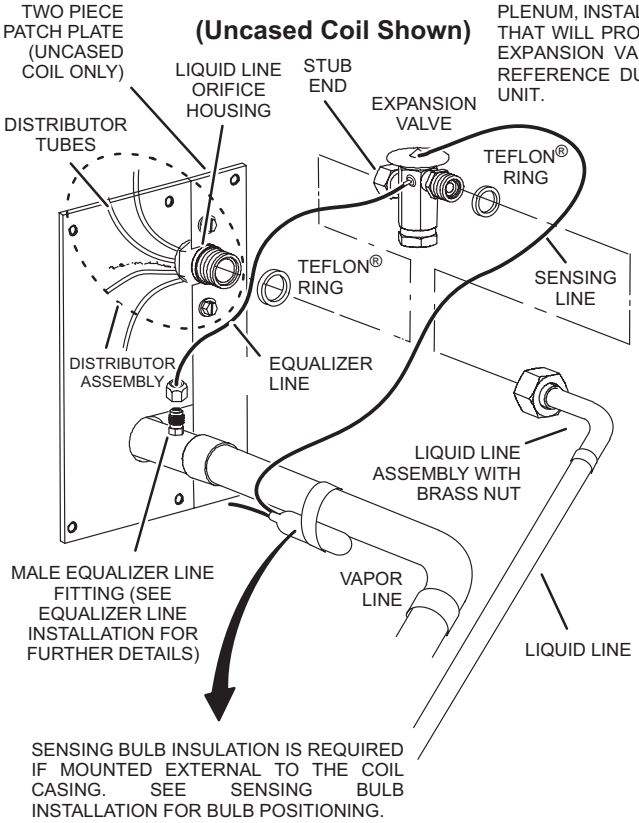

A. REMOVE THE FIELD-PROVIDED FITTING THAT TEMPORARILY RECONNECTED THE LIQUID LINE TO THE INDOOR UNIT'S DISTRIBUTOR ASSEMBLY.

B. INSTALL ONE OF THE PROVIDED TEFLON® RINGS AROUND THE STUBBED END OF THE EXPANSION VALVE AND LIGHTLY LUBRICATE THE CONNECTOR THREADS AND EXPOSE SURFACE OF THE TEFLON® RING WITH REFRIGERANT OIL.

C. ATTACH THE STUBBED END OF THE EXPANSION VALVE TO THE LIQUID LINE ORIFICE HOUSING. FINGER TIGHTEN AND USE AN APPROPRIATELY SIZED WRENCH TO TURN AN ADDITIONAL 1/2 TURN CLOCKWISE AS ILLUSTRATED IN THE FIGURE ABOVE, OR 20 FT-LB.

D. PLACE THE REMAINING TEFLON® WASHER AROUND THE OTHER END OF THE EXPANSION VALVE. LIGHTLY LUBRICATE CONNECTOR THREADS AND EXPOSE SURFACE OF THE TEFLON® RING WITH REFRIGERANT OIL.

E. ATTACH THE LIQUID LINE ASSEMBLY TO THE EXPANSION VALVE. FINGER TIGHTEN AND USE AN APPROPRIATELY SIZED WRENCH TO TURN AN ADDITIONAL 1/2 TURN CLOCKWISE AS ILLUSTRATED IN THE FIGURE ABOVE OR 20 FT-LB.

SENSING BULB INSTALLATION

A. ATTACH THE VAPOR LINE SENSING BULB IN THE PROPER ORIENTATION AS ILLUSTRATED TO THE RIGHT USING THE CLAMP AND SCREWS PROVIDED.

***NOTE** - CONFIRM PROPER THERMAL CONTACT BETWEEN VAPOR LINE AND CHECK EXPANSION BULB BEFORE INSULATING THE SENSING BULB ONCE INSTALLED.*

B. CONNECT THE EQUALIZER LINE FROM THE EXPANSION VALVE TO THE EQUALIZER VAPOR PORT ON THE VAPOR LINE. FINGER TIGHTEN THE FLARE NUT PLUS 1/8 TURN (7 FT-LBS) AS ILLUSTRATED BELOW.

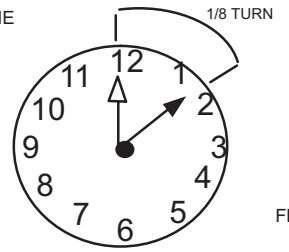

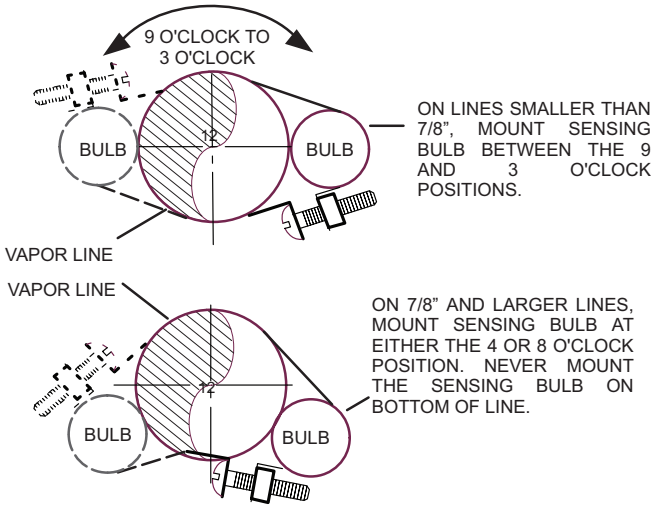

NOTE - NEVER MOUNT THE SENSING BULB ON BOTTOM OF LINE.

EQUALIZER LINE INSTALLATION

REMOVE AND DISCARD EITHER THE FLARE SEAL CAP OR FLARE NUT WITH COPPER FLARE SEAL BONNET FROM THE EQUALIZER LINE PORT ON THE VAPOR LINE AS ILLUSTRATED IN THE FIGURE TO THE RIGHT.

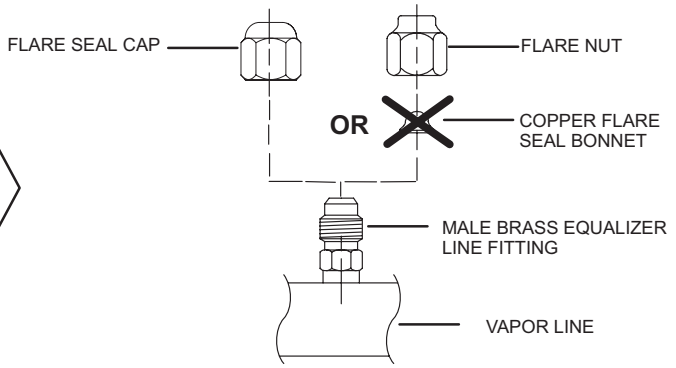

⚠ IMPORTANT

The Environmental Protection Agency (EPA) prohibits the intentional venting of HFC refrigerants during maintenance, service, repair and disposal of appliance.

Approved methods of recovery, recycling or reclaiming must be followed.

Leak Testing the System

⚠ WARNING

When using a high pressure gas such as nitrogen to pressurize a refrigeration or air conditioning system, use a regulator that can control the pressure down to 1 or 2 psig (6.9 to 13.8 kPa).

⚠ IMPORTANT

Leak detector must be capable of sensing A2L refrigerant.

⚠ WARNING

Refrigerant can be harmful if it is inhaled. Refrigerant must be used and recovered responsibly.

Failure to follow this warning may result in personal injury or death.

LEAK TEST

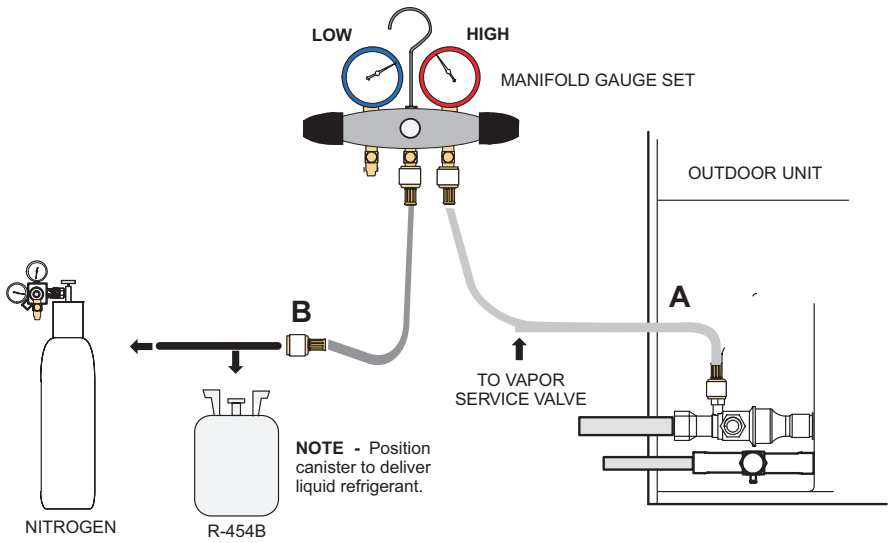

1 CONNECT GAUGE SET

A - Connect the high pressure hose of an R-454B manifold gauge set to the vapor valve service port.

NOTE *- Normally, the high pressure hose is connected to the liquid line port. However, connecting it to the vapor port better protects the manifold gauge set from high pressure damage.*

B - With both manifold valves closed, connect the cylinder of R-454B refrigerant to the center port of the manifold gauge set.

NOTE *- Later in the procedure, the R-454B container will be replaced by the nitrogen container.*

2 TEST FOR LEAKS

After the line set has been connected to the indoor and outdoor units, check the line set connections and indoor unit for leaks. Use the following procedure to test for leaks:

A - With both manifold valves closed, connect the cylinder of R-454B refrigerant to the center port of the manifold gauge set. Open the valve on the R-454B cylinder (vapor only).

B - Open the high pressure side of the manifold to allow R-454B into the line set and indoor unit. Weigh in a trace amount of R-454B. *[A trace amount is a maximum of two ounces (57 g) refrigerant or three pounds (31 kPa) pressure.]* Close the valve on the R-454B cylinder and the valve on the high pressure side of the manifold gauge set. Disconnect the R-454B cylinder.

C - Connect a cylinder of nitrogen with a pressure regulating valve to the center port of the manifold gauge set.

D - Adjust nitrogen pressure to 160 psig (1103 kPa). Open the valve on the high side of the manifold gauge set in order to pressurize the line set and the indoor unit.

E - After a few minutes, open one of the service valve ports and verify that the refrigerant added to the system earlier is measurable with a leak detector. Once leak detector is confirmed operational, leak check the entire system (field joints and line set included) to a sensitivity of 5 grams per year of refrigerant.

F - After leak testing, disconnect gauges from service ports.

FIGURE 11. System Leak Test

EVACUATION

3 CONNECT GAUGE SET

NOTE *- Remove cores from service valves (if not already done).*

A - Connect low side of manifold gauge set with 1/4 SAE in-line tee to *vapor* line service valve

B - Connect high side of manifold gauge set to *liquid* line service valve

C - Connect available micron gauge connector on the 1/4 SAE in-line tee.

D - Connect the vacuum pump (with vacuum gauge) to the center port of the manifold gauge set. The center port line will be used later for both the R454B and nitrogen containers.

NOTE - *Position canister to deliver liquid refrigerant.*

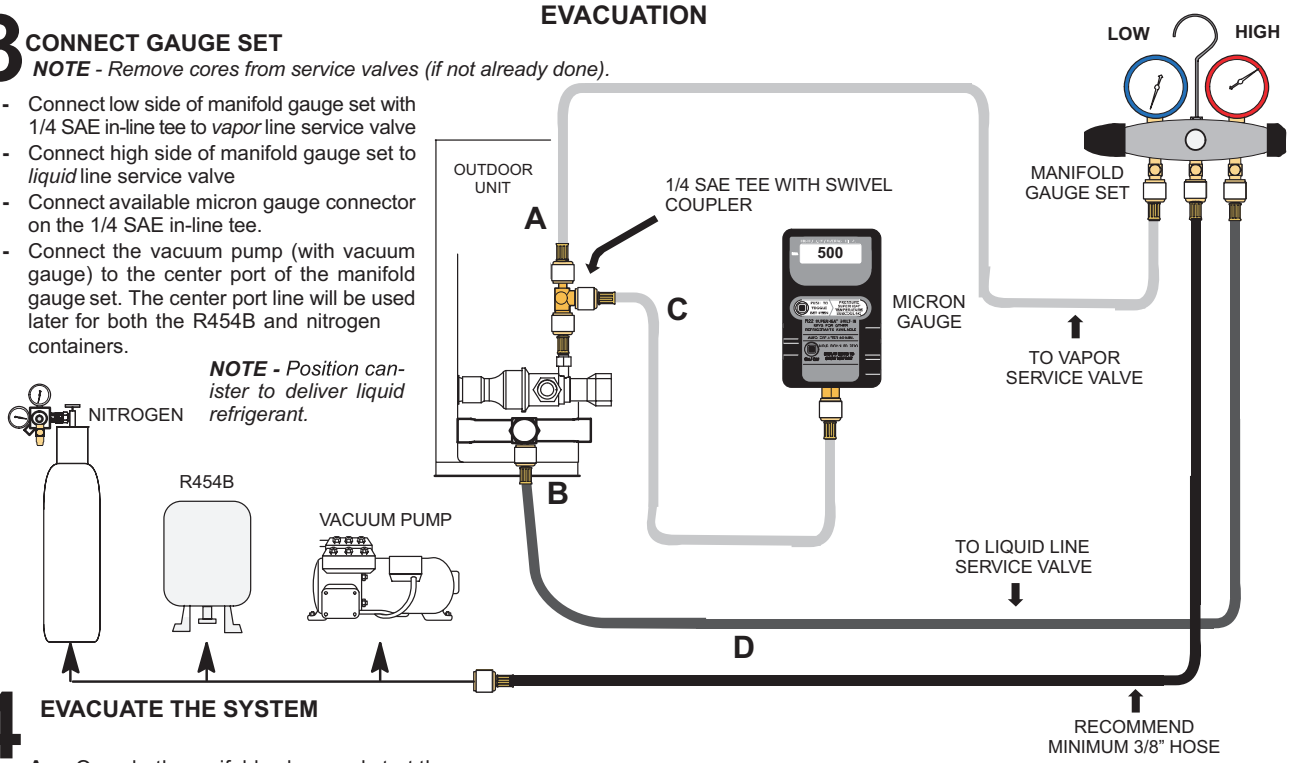

4 EVACUATE THE SYSTEM

A - Open both manifold valves and start the vacuum pump.

B - Evacuate the line set and indoor unit to an **absolute pressure** of 23,000 microns (29.01 inches of mercury).

NOTE *- During the early stages of evacuation, it is desirable to close the manifold gauge valve at least once. A rapid rise in pressure indicates a relatively large leak. If this occurs,* ***repeat the leak testing procedure****.*

NOTE *- The term* ***absolute pressure*** *means the total actual pressure above absolute zero within a given volume or system. Absolute pressure in a vacuum is equal to atmospheric pressure minus vacuum pressure.*

C - When the absolute pressure reaches 23,000 microns (29.01 inches of mercury), perform the following:

- Close manifold gauge valves.
- Close valve on vacuum pump.
- Turn off vacuum pump.
- Disconnect manifold gauge center port hose from vacuum pump.
- Attach manifold center port hose to a nitrogen cylinder with pressure regulator set to 160 psig (1103 kPa) and purge the hose.
- Open manifold gauge valves to break the vacuum in the line set and indoor unit.
- Close manifold gauge valves.

WARNING !

Possible equipment damage.

Avoid deep vacuum operation. Do not use compressors to evacuate a system. Extremely low vacuum can cause internal arcing and compressor failure. Damage caused by deep vacuum operation will void warranty.

D - Shut off the nitrogen cylinder and remove the manifold gauge hose from the cylinder. Open the manifold gauge valves to release the nitrogen from the line set and indoor unit.

E - Reconnect the manifold gauge to the vacuum pump, turn the pump on, and continue to evacuate the line set and indoor unit until the absolute pressure does not rise above 500 microns (29.9 inches of mercury) within a 20-minute period after shutting off the vacuum pump and closing the manifold gauge valves.

F - When the absolute pressure requirement above has been met, disconnect the manifold hose from the vacuum pump and connect it to a cylinder of R454B positioned to deliver liquid refrigerant. Open the manifold gauge valve 1 to 2 psig in order to release the vacuum in the line set and indoor unit.

G - Perform the following:

- Close manifold gauge valves.
- Shut off R454B cylinder.
- Reinstall service valve cores by removing manifold hose from service valve. Quickly install cores with core tool while maintaining a positive system pressure.
- Replace stem caps and finger tighten them, then tighten an additional one-sixth (1/6) of a turn as illustrated.

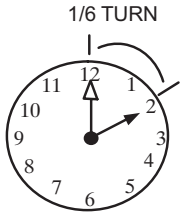

FIGURE 12. Evacuating the System

⚠ IMPORTANT

Use a thermocouple or thermistor electronic vacuum gauge that is calibrated in microns. Use an instrument capable of accurately measuring down to 50 microns.

⚠ WARNING

Possible equipment damage.

Avoid deep vacuum operation. Do not use compressors to evacuate a system. Extremely low vacuum can cause internal arcing and compressor failure. Damage caused by deep vacuum operation will void warranty.

Evacuating the system of non-condensables is critical for proper operation of the unit. Non-condensables are defined as any gas that will not condense under temperatures and pressures present during operation of an air conditioning system. Non-condensables and water suction combine with refrigerant to produce substances that corrode copper piping and compressor parts.

ELECTRICAL – Circuit Sizing and Wire Routing

In the U.S.A., wiring must conform with current local codes and the current National Electric Code (NEC). In Canada, wiring must conform with current local codes and the current Canadian Electrical Code (CEC).

Refer to the furnace or air handler installation instructions for additional wiring application diagrams and refer to unit nameplate for minimum circuit ampacity and maximum overcurrent protection size.

24VAC TRANSFORMER

Use the transformer provided with the furnace or air handler for low-voltage control power (24VAC - 40 VA minimum).

REFRIGERANT DETECTION SYSTEM

Unit must be installed with Lennox Approved Refrigerant detection system (RDS) and sensor.

Do not operate system until refrigerant detection system is verified to be in good working order.

Thermostat Control and Low Voltage Control Wiring

EL18KCV Thermostat Control Options

The EL18KCV variable capacity units provide two thermostat control options to provide application and installation flexibility.

S40 Communicating Thermostat Control

The E18XPV variable capacity unit may be installed as a fully communicating system consisting of S40 Smart Communicating Thermostat, a communicating indoor unit and the EL18KCV variable capacity outdoor unit wired with (4) communication wires (R, I+, I- and C) connected to the EL18KCV Outdoor Unitary Control.

The EL18KCV variable capacity unit, when wired as a fully communicating system will take full advantage of the advanced diagnostics and control, Wi-Fi accessibility and system operation parameters. Refer to the EL18KCV field wiring diagram for an S40 communicating thermostat.

Conventional 24VAC Non-Communicating Thermostat Control

The EL18KCV variable capacity unit may be installed using a conventional 24VAC non-communicating two stage cooling or single stage cooling thermostat.

NOTE – *The conventional 24VAC non-communicating thermostat must have a compressor minimum on time of three minutes to prevent compressor short cycling. The Lennox M30, ComfortSense 7500, ComfortSense 3000 and many other commercially available electronic thermostats provide this feature.*

The EL18KCV unit will provide full variable capacity operation when installed with a conventional 24VAC non-communicating two stage cooling or single stage cooling thermostat. The EL18KCV outdoor control has advanced control algorithms using the EL18KCV suction pressure sensor to provide true variable capacity operation.

When utilizing a two-stage conventional 24VAC non-communicating cooling thermostat, four wires are required to control the outdoor unit (R, C, Y1 and Y2). Refer to the EL18KCV field wiring diagram for a conventional 24VAC non-communicating 2-stage cooling thermostat.

When utilizing a single-stage conventional 24VAC non-communicating cooling thermostat, three wires are required to control the outdoor unit (R, C and Y1) and Y1 is jumpered to Y2 in the outdoor unit. Note that the published performance data is based upon the use of a two-stage thermostat. Refer to the EL18KCV field wiring diagram for a conventional 24VAC non-communicating single-stage thermostat.

EL18KCV Low Voltage Control Wiring Connections

The EL18KCV variable capacity units are provided with (2) RAST 6-Pin connections in the installation instruction bag for connecting the field low voltage control wiring to the EL18KCV harnesses in the low voltage control make-up box. One RAST 6-pin connector is labeled with terminals TST, DF, R, I+, I- and C. The second RAST 6-pin connector is labeled with terminals DS, O, Y1, Y2, L and W.

⚠ WARNING

Electric Shock Hazard. Can cause injury or death. Unit must be properly grounded in accordance with national and local codes.

Line voltage is present at all components when unit is not in operation on units with single-pole contactors. Disconnect all remote electric power supplies before opening access panel. Unit may have multiple power supplies.

⚠ WARNING

Fire Hazard. Use of aluminum wire with this product may result in a fire, causing property damage, severe injury or death. Use copper wire only with this product.

⚠ WARNING

ELECTROSTATIC DISCHARGE (ESD) Precautions and Procedures	Electrostatic discharge can affect electronic components. Take care during unit installation and service to protect the unit's electronic controls. Precautions will help to avoid control exposure to electrostatic discharge by putting the unit, the control and the technician at the same electrostatic potential. Touch hand and all tools on an unpainted unit surface before performing any service procedure to neutralize electrostatic charge.

⚠ WARNING

Failure to use properly sized wiring and circuit breaker may result in property damage. Size wiring and circuit breaker(s) per Product Specifications bulletin (EHB) and unit rating plate.

EL18KCV Thermostat Control Options

Thermostat Type	Indoor Unit Type	Qty. of Wires to EL18KCV	EL18KCV Terminal Strip Connections	Unit Operation	Field Wiring Diagram
S40 Communicating Thermostat	Comunicating Gas Furnace or Air Handler	4	R, I+, I-, C	Fully Communicating Variable Capacity Operation Based Upon Thermostat Demand	Figure 15
Conventional 24VAC 2-Stage Cooling Thermostat (non-communicating)	Any Furnace or Air Handler (non-communicating or communicating)	4	R, C, Y1, Y2	Full Variable Capacity Operation Controlled by EL18KCV Unitary Control Using Suction Pressure	Figure 16
Conventional 24VAC Single-Stage Cooling Thermostat (non-communicating)	Any Furnace or Air Handler (non-communicating or communicating)	3	R, C, Y1 (Jumper Y1 to Y2)	Full Variable Capacity Operation Controlled by EL18KCV Unitary Control Using Suction Pressure	Figure 16

1 SIZE CIRCUIT AND INSTALL SERVICE DISCONNECT SWITCH

Refer to the unit nameplate for minimum circuit ampacity, and maximum fuse or circuit breaker (HACR per NEC). Install power wiring and properly sized disconnect switch.

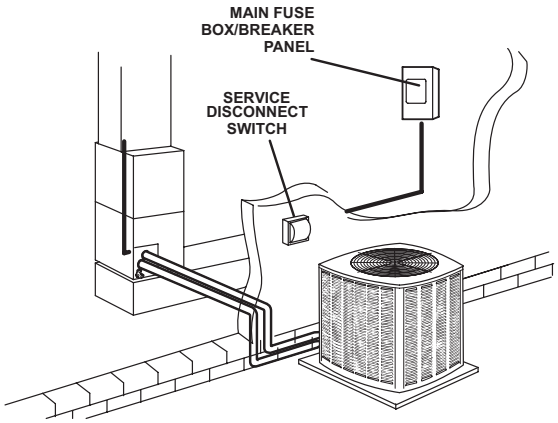

NOTE - *Units are approved for use only with copper conductors. Ground unit at disconnect switch or connect to an earth ground.*

2 INSTALL THERMOSTAT

Install room thermostat (ordered separately) on an inside wall approximately in the center of the conditioned area and 5 feet (1.5m) from the floor. It should not be installed on an outside wall or where it can be affected by sunlight or drafts.

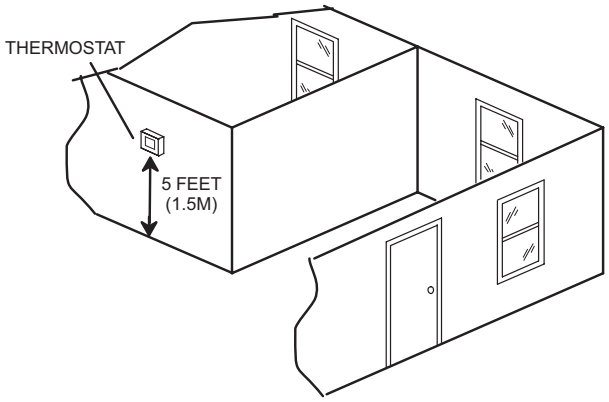

NOTE - *24VAC, Class II circuit connections are made in the control panel.*

3 ROUTE CONTROL WIRES

Communicating Thermostat Wiring

Maximum length of wiring (18 gauge) for all connections on the RSBus is 1500 feet (457 meters). Wires should be color-coded, with a temperature rating of 95°F (35°C) minimum, and solid-core (Class II Rated Wiring). All low voltage wiring must enter unit through field-provided field-installed grommet installed in electrical inlet.

Conventional 24VAC Non-Communicating Thermostat Wiring

WIRE RUN LENGTH	AWG#	INSULATION TYPE
LESS THAN 100' (30 METERS)	18	TEMPERATURE RATING
MORE THAN 100' (30 METERS)	16	35ºC MINIMUM.

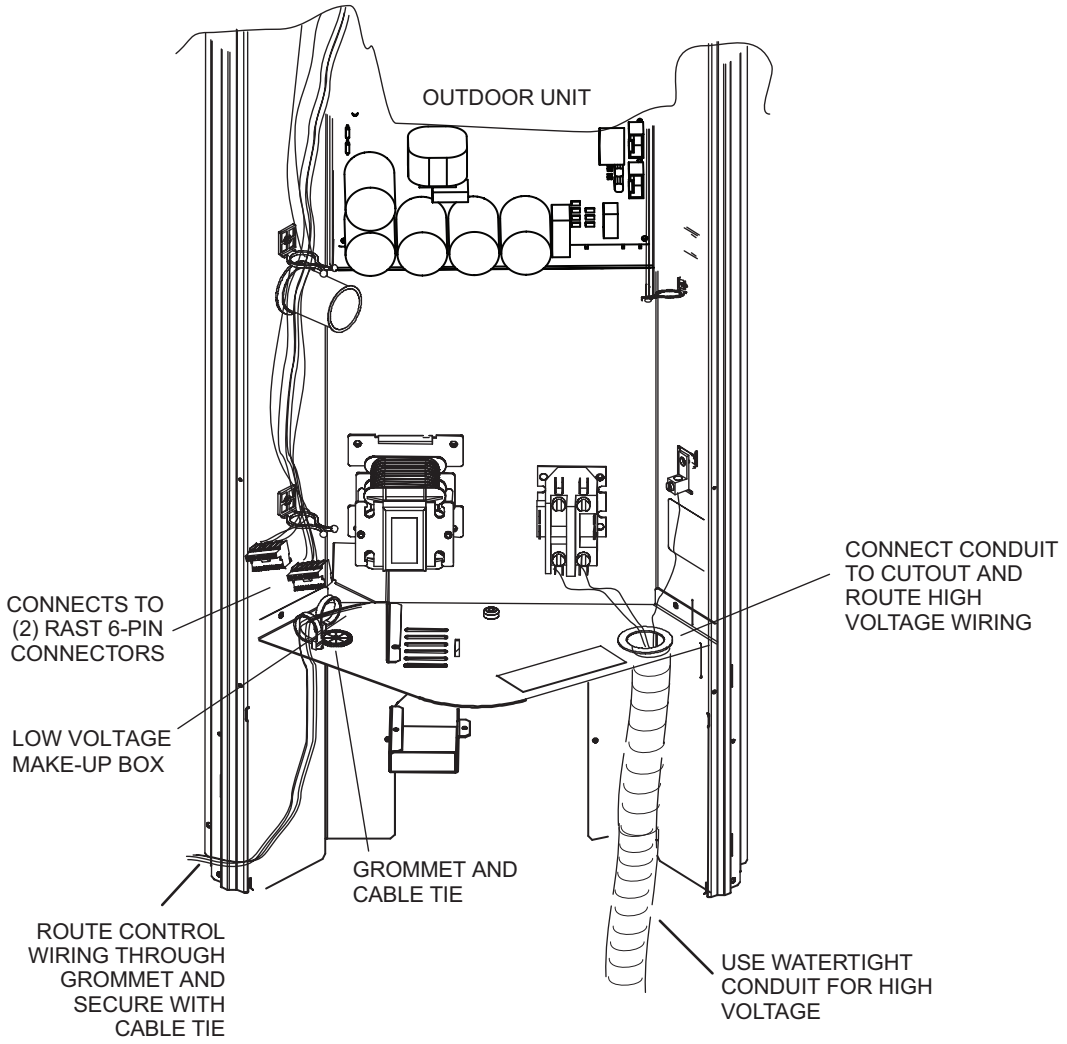

4 ROUTE HIGH VOLTAGE AND GROUND WIRES

Any excess high voltage field wiring should be trimmed and secured away from any low voltage field wiring. To facilitate a conduit, a cutout is located on the bottom of the control box. Connect conduit to the control box using a proper conduit fitting.

Connect the 208/230 high voltage power supply from the disconnect to the EL18KCV contactor as shown. Connect the ground wire from the power supply to the unit ground lug connection.

FIGURE 13. Typical Control Wiring

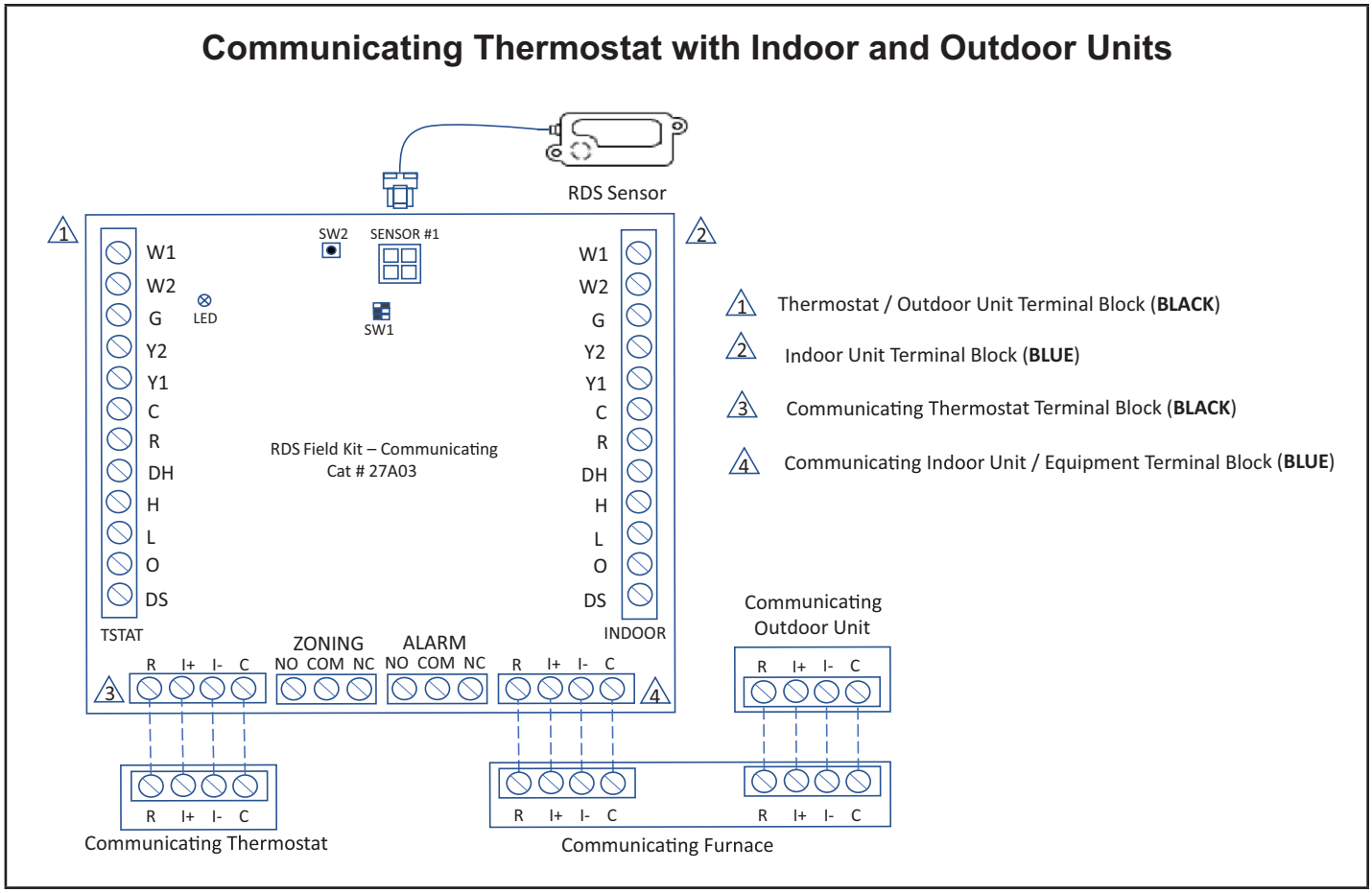

FIGURE 14. EL18KCV with S40 Communicating Thermostat – Field Wiring Diagram with RDS Controller.

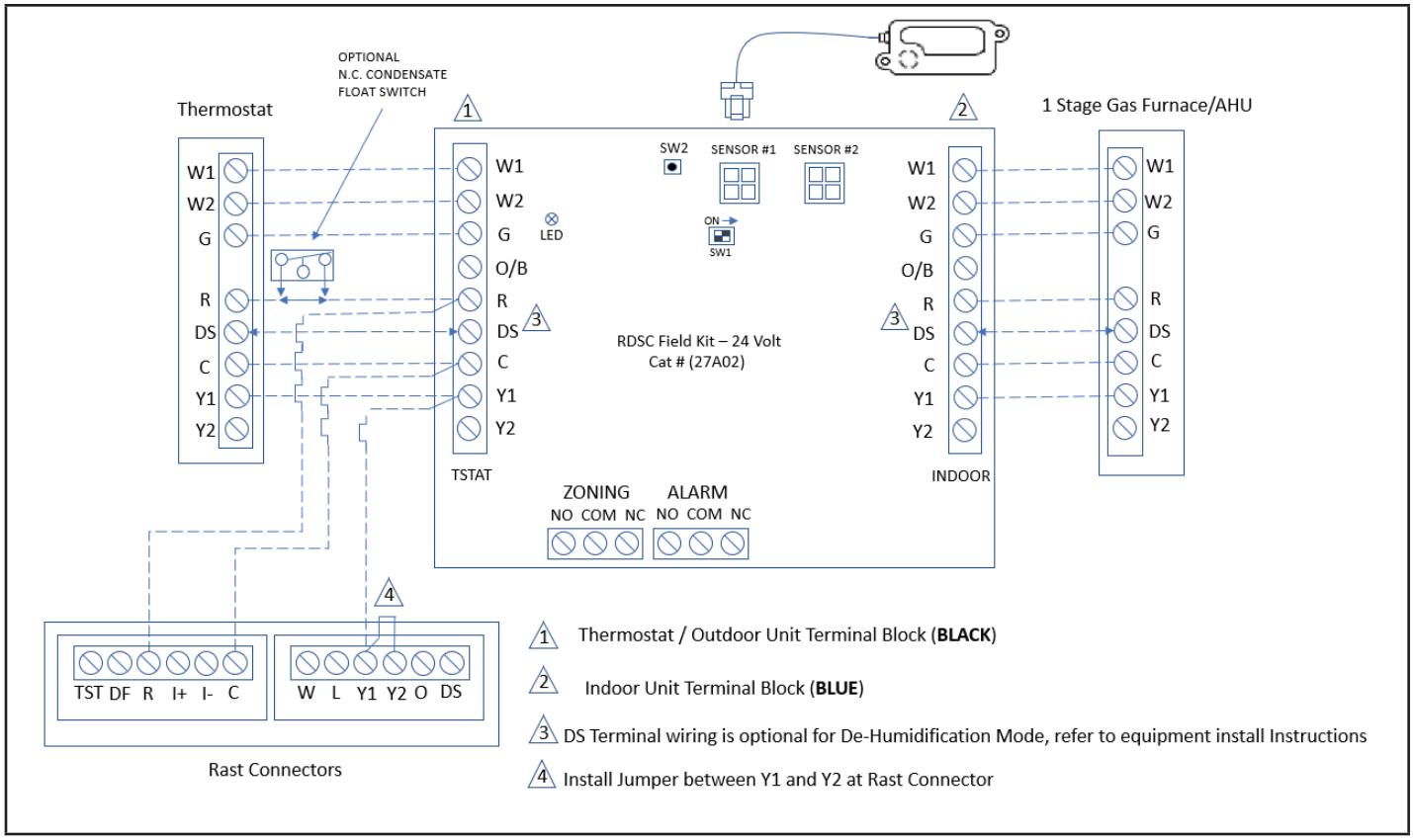

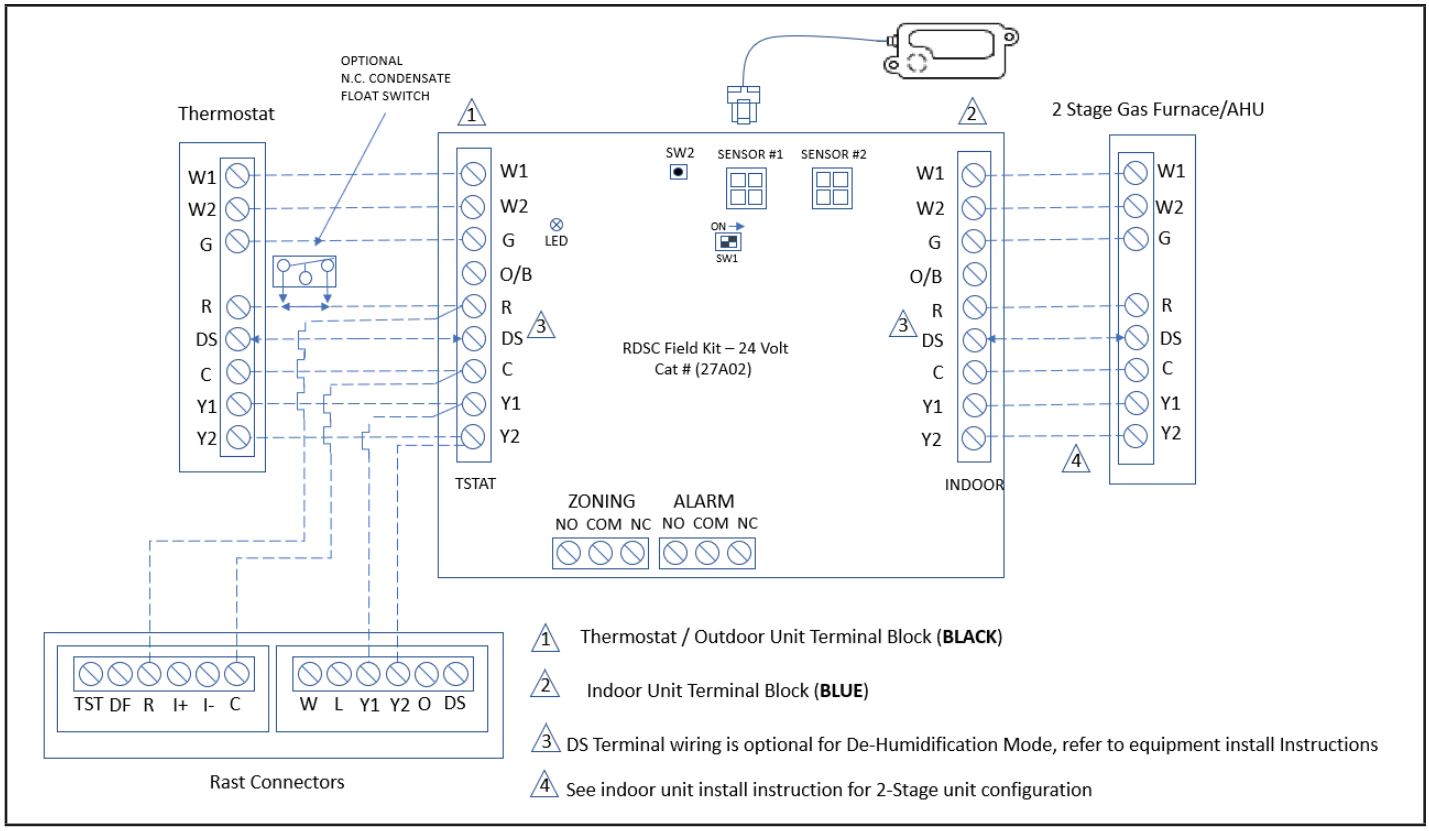

FIGURE 15. Conventional 24VAC Cooling Non-Communicating Thermostat Wiring with RDS Controller

5 – Outdoor Unitary Control - Jumpers and Terminals

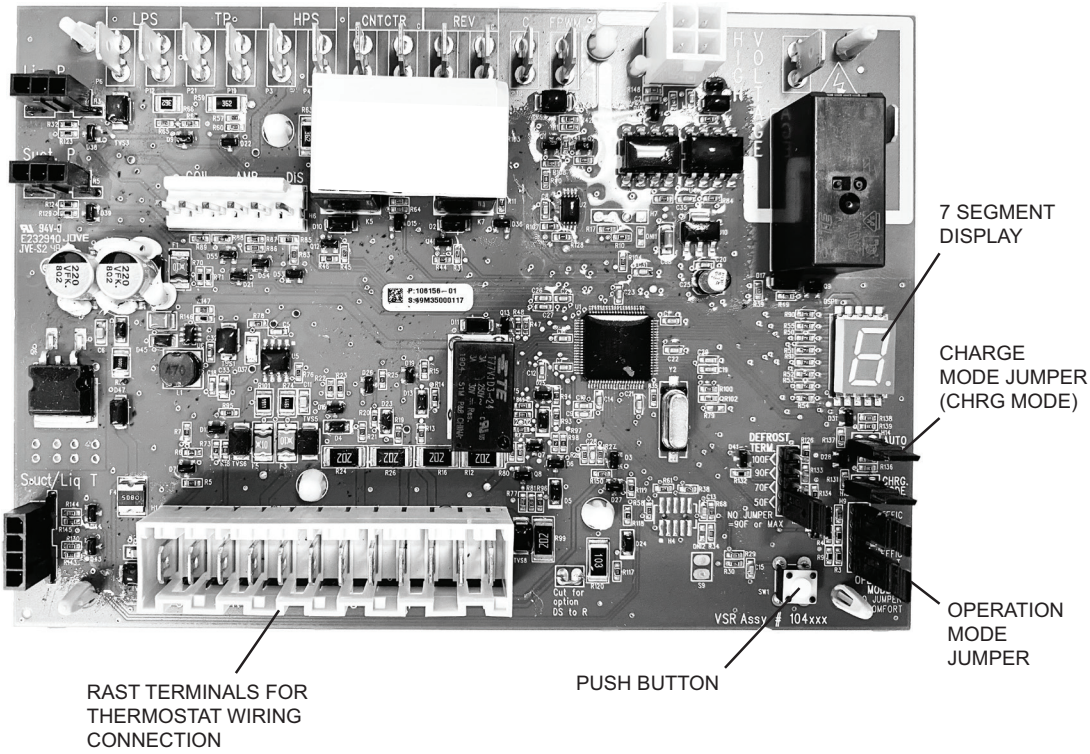

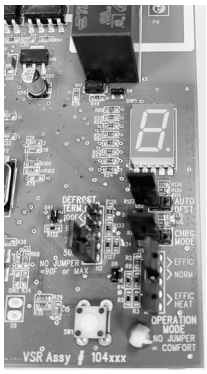

CHARGE MODE AND OPERATION MODE JUMPER DETAIL

Outdoor Control 7 Segment Display and Push Button

Information concerning the outdoor control 7-segment display and push button operations are available on the unit access panel.

Alarms

Alarm information is provided on the unit access panel.

Charge Mode Jumper

To initiate the EL18KCV Charge Mode function, install the jumper across the two Charge Mode Pins (CHRG MODE) on the outdoor control. The Charge Mode can be used when charging the system with refrigerant, checking the refrigerant charge, pumping down the system and performing other service procedures that requires outdoor unit operation at 100% capacity.

EL18KCV Charge Mode Operation with a S40 Communicating Thermostat

Installing a jumper on the Charge Mode Pins will initiate compressor operation and outdoor fan motor at 100% capacity and will provide a signal to the indoor unit to initiate indoor blower operation at the maximum cooling air volume. To exit the charge mode, remove the Charge Mode Jumper. The Charge Mode has a maximum time of 60 minutes and will automatically exit the charge mode after 60 minutes is the charge mode jumper is left in place.

EL18KCV Charge Mode Operation with a Conventional 24VAC Non-Communicating Thermostat

On applications with a conventional 24VAC non-communicating thermostat, the charge mode jumper must be installed on the Charge Mode Pins after providing a Y1 cooling demand to the EL18KCV to initiate the Charge Mode. A cooling blower demand must also be provided to initiate blower operation on the cooling speed on the indoor unit. The compressor and outdoor fan motor will operate at 100% capacity. To exit the charging mode, remove the Charge Mode Jumper and remove the Y1 Cooling demand and indoor blower demand. The Charge Mode has a maximum time of 60 minutes and will automatically exit the charge mode after 60 minutes if the charge mode jumper is left in place.

Operation Mode Jumper

The Operation Mode Jumper is only used on applications installed with a conventional 24VAC Non-communicating thermostat. In applications with a conventional 24VAC non-communicating thermostat, the compressor capacity is controlled to maintain the target suction pressure setpoint. The Operation Mode Jumper has three selectable cooling modes. The three modes are Efficiency (Jumper installed on Pins 1 & 2), Normal Mode (Jumper installed on Pins 2 & 3) and Comfort Mode (Jumper Removed). The factory default position is the Efficiency Mode. The Efficiency mode has a variable suction pressure setpoint that will vary with the outdoor temperature; as the outdoor temperature increases the suction pressure setpoint will decrease. When the Operation Mode jumper is installed in the “Normal Mode” the suction pressure setpoint is 135 psig.

When the Operation Mode jumper is installed in the “Comfort Mode” the suction pressure setpoint is 125 psig.

Unit Operation

EL18KCV Unit Operation with a S40 Communicating Thermostat

When the EL18KCV unit is installed with a S40 Communicating Thermostat and communicating indoor unit, the unit capacity will be controlled in the variable capacity mode throughout the range of capacity from minimum capacity to maximum capacity based upon thermostat demand. The indoor air volume will be controlled to match cooling capacity throughout the capacity range.

EL18KCV Unit Operation with a Conventional 24VAC Non-Communicating 2-Stage Thermostat

When the EL18KCV unit is installed with a conventional 24VAC non-communicating 2-stage thermostat, a Y1 first stage cooling demand will initiate cooling operation and first stage indoor blower operation. The compressor will be controlled in the variable capacity mode by varying the compressor capacity to obtain the target suction pressure set point. The Y2 second stage cooling demand will initiate second stage blower operation. Increased air volume will increase the load on the indoor coil and increase the suction pressure. The EL18KCV compressor capacity will continue to be controlled based upon the suction pressure. The unit capacity will be controlled in the variable capacity mode throughout the range of capacity from minimum capacity to maximum capacity. If the Y2 demand remains after 20 minutes, the EL18KCV control will begin to ramp up the compressor capacity until maximum capacity is achieved. The EL18KCV unit will cycle off once the thermostat demand is satisfied.

EL18KCV Unit Operation with a Conventional 24VAC Non-Communicating Single-Stage Thermostat

When the EL18KCV unit is installed with a conventional 24VAC non-communicating single-stage thermostat, a Y1 first stage cooling demand will initiate cooling operation and cooling indoor blower operation. In single stage thermostat applications, a jumper must be installed between Y1 and Y2 on the EL18KCV outdoor control. The compressor will be controlled in the variable capacity mode by varying the compressor capacity to obtain the target suction pressure set point. If the cooling demand remains after 20 minutes, the EL18KCV control will begin to ramp up the compressor capacity until maximum capacity is achieved. The EL18KCV unit will cycle off once the thermostat demand is satisfied.

TABLE 6

Outdoor Control Terminal Designations and Input /Outputs (see figure 15 for terminal locations)				
Designator	**Description**	**Input**	**Output**	**Common**
O	Unused on EL18KCV, for heat pump applications only	N/A	Switched 24VAC nominal	N/A
REV	Unused on EL18KCV, for heat pump applications only	N/A	N/A	24VAC common
LPS	Low pressure switch (not used on EL18KCV)	N/A	5ma @ 18VAC	N/A
LPS	Low pressure switch sensing connection (not used on EL18KCV)	5ma @ 18VAC	N/A	N/A
HPS	High pressure switch	N/A	24VAC nominal	N/A
HPS	High pressure switch sensing connection	24VAC nominal	N/A	N/A
TP	Top cap thermostat switch (in series with the HPS)	N/A	24VAC nominal	N/A
TP	Top cap thermostat switch sensing connection	24VAC nominal	N/A	N/A
Cntctr	Control (inverter power) contactor switched output (in series with the HPS and TC)	N/A	Switched 24VAC nominal	N/A
Cntctr	Contactor common	N/A		24VAC common
FPWM	PWM fan output	N/A	10-97% duty cycle, 19-23 VDC peak	
C	PWM fan common connection	N/A	N/A	Fan PWM common
P10 (PSC Fan 1/4" QC)	1/4" QC terminals - Switched output for PSC outdoor fan control	N/A	Switched 230VAC Nominal	N/A
RAST Connector Terminal Designations				
W	Unused on ELXCV, for heat pump applications only	N/A	24VAC nominal	N/A
L	24VAC input to initiate load shed	24VAC nominal from load shed N.O. contacts (close to initiate load shed)	N/A	N/A
Y2	Y2 second stage cooling input when a conventional 24VAC non-communicating thermostat is used. Must be jumpered to Y1 if a single stage cooling thermostat is used	24VAC nominal from thermostat	N/A	N/A
Y1	Y1 first stage cooling input when a conventional 24VAC non-communicating thermostat is used	24VAC nominal from thermostat	N/A	N/A
O	Unused on EL18KCV, for heat pump applications only	24VAC nominal from thermostat	N/A	N/A
DS	Dehumidification input - not used	N/A	N/A	N/A
C	24VAC nominal power return	N/A	N/A	24VAC common
I-	Low data line	Data	Data	N/A
I+	High data line	Data	Data	N/A
R	24VAC nominal power input	24VAC nominal board main power input	N/A	N/A
DF	OEM test	N/A	N/A	N/A
TST	OEM test pin	24VAC nominal	N/A	N/A

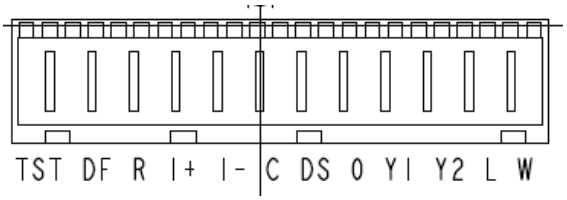

Table 6 continued

Outdoor Control Terminal Designations and Inputs / Outputs					
WARNING - Electric Shock Hazard. Can cause injury or death. Unit must be grounded in accordance with national and local codes. The 4 pins in P6 have the potential of transferring up to 250 volts to the unit cabinet ground.					
Designator		**Description**	**Input**	**Output**	**Common**
P6 - Pin 1	Tx	Transmit data to inverter, connects to Rx of inverter	Outdoor control communication transmit pin	– Pin 1 to pin 2 should read 4.5 to 5.55 VDC when not communicating – Pin 3 to pin 2 should read 4.5 to 5.55 VDC when not communicating – Pin 4 to pin 2 should read 4.5 to 5.5 VDC NOTE - Communication signals switch off and on rapidly. This may cause volt meter readings to fluctuate. This is normal. Communication signals will switch between this 5V and common (Pin 2).	
P6 - Pin2	Inverter Common	Inverter common NOTE – This is a signal reference point and not an earth ground.	Inverter common		
P6 - Pin 3	Rx	Receive data from the inverter Connects to Tx of inverter	Outdoor control communication receive pin		
P6 - Pin 4	Inv 5V	Inverter 5VDC volts	Inverter 5VDC volts		
DIS		Discharge Line temperature sensor - not used (10K ohm resistor installed)	N/A	N/A	N/A
DIS		Discharge Line temperature sensor - not used (10K ohm resistor installed)	N/A	N/A	N/A
AMB		Outdoor ambient temperature sensor supply	N/A	N/A	N/A
AMB		Outdoor ambient temperature sensor return	N/A	N/A	N/A
COIL		Outdoor coil temperature sensor - not used (10K ohm resistor installed)	N/A	N/A	N/A
COIL		Outdoor coil temperature sensor - not used (10K ohm resistor installed)	N/A	N/A	N/A
CHRG MODE		Charge Mode function. Can be used when charging, checking charge, pump down or checking unit operation. Unit will run at 100% capacity. Conventional 24VAC thermostat 1. Install the Charge Mode jumper (before the Y1 demand) 2. Provide a Y1 demand to the EL18KCV 3. A blower demand must be provided to the indoor unit for 100% of the cooling air volume. 4. Remove the charge mode jumper to end the charge mode S40 Communicating Thermostat 1. Install the Charge Mode jumper 2. Unit will start and run at 100% capacity and communicate to the indoor unit to bring on the blower at 100% of the cooling air volume. 4. Remove the charge mode jumper to end the charge mode NOTE - If the charge mode jumper is in the ON position during power-up, it is ignored. NOTE - If the charge mode is left in place, it will be ignored after 60 minutes.	**Charge Mode Disabled** 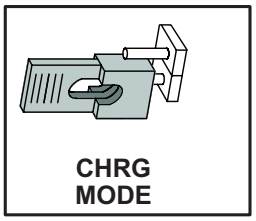 **CHRG MODE**	**Charge Mode Enabled** 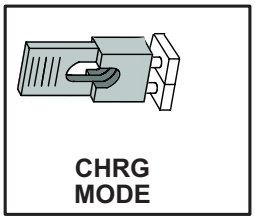 **CHRG MODE**	

Table 6 continued

Designator	Description	Input	Output	Common
Suction Pressure Out	Pressure transducer Supply Voltage Pin 1 of 3		5 VDC	
Suction Pressure In	Pressure transducer output voltage Pin 2 of 3	0-4.5 VDC		
Suction Pressure GND	Pressure transducer GND Pin 3 of 3			VDC Com
Liquid Pressure Out	Pressure transducer Supply Voltage Pin 1 of 3 - Not used on EL18KCV Air Conditioner		5 VDC	
Liquid Pressure In	Pressure transducer Supply Voltage Pin 2 of 3 - Not used on EL18KCV Air Conditioner	0-4.5 VDC		
Liquid Pressure GND	Pressure transducer GND Pin 3 of 3 - Not used on EL18KCV Air Conditioner			VDC Com
SUCT1	Suction Line Temperature Sensor Supply - Pin 1 of 4		0-4.5 VDC	
SUCT2	Suction Line Temperature Sensor Supply - Pin 2 of 4			
LIQ1	Liquid Line Temperature Sensor Supply - Pin 3 of 4		0-4.5 VDC	
LIQ2	Liquid Line Temperature Sensor Supply - Pin 4 of 4			

Servicing Units Delivered Void of Charge

If the outdoor unit is void of refrigerant, clean the system using the procedure described below.

1 - Leak test the system using the procedure outlined on page 26.

2 - Evacuate the system using procedure outlined on page 27.

3 - Use nitrogen to break the vacuum and install a new filter drier in the system.

4 - Evacuate the system again using procedure outlined on page 27.

5 - Weigh in refrigerant using procedure outlined in figure 48.

6 - Monitor the system to determine the amount of moisture remaining in the oil. It may be necessary to replace the filter drier several times to achieve the required dryness level. **If system dryness is not verified, the compressor will fail in the future**.

Unit Start-Up

⚠ IMPORTANT

If unit is equipped with a crankcase heater, it should be energized 24 hours before unit start-up to prevent compressor damage as a result of slugging.

1 - Rotate fan to check for binding.

2 - Inspect all factory- and field-installed wiring for loose connections.

3 - After evacuation is complete, open both the liquid and vapor line service valves to release the refrigerant charge contained in outdoor unit into the system.

4 - Replace the stem caps and tighten to the value listed in table 1.

5 - Check voltage supply at the disconnect switch. The voltage must be within the range listed on the unit's nameplate. If not, do not start the equipment until you have consulted with the power company and the voltage condition has been corrected.

6 - Set the thermostat for a cooling demand. Turn on power to the indoor unit and close the outdoor unit disconnect switch to start the unit.

7 - Recheck voltage while the unit is running. Power must be within range shown on the nameplate.

8 - Check system for sufficient refrigerant by using the procedures listed in the System Refrigerant section on page 75.

7-SEGMENT ALERT AND SYSTEM STATUS CODES

Alert codes are displayed using the 7-segment display located on the outdoor control.

NOTE - System fault and lockout codes take precedence over system status codes (cooling, heating operating percentages or defrost/dehumidification).

The 7-segment will display an abnormal condition (error code) when detected in the system. A list of the codes are shown in table 6.

Resetting Alert Codes

Alert codes can be reset manually or automatically:

1 - Manual Reset

Manual reset can be achieved by one of the following methods:

- Disconnecting R wire from the outdoor control R terminal.
- Turning the indoor unit off and back on again

After power up, all currently displayed codes are cleared.

2 - Automatic Reset

After an alert is detected, the outdoor control continues to monitor the unit's system and compressor operations. When/if conditions return to normal, the alert code is turned off automatically.

NOTE - Error codes can be recalled by following information shown in the table on page 37.

TABLE 7. Outdoor Control 7-Segment Display Alert Codes and Inverter LED Flash Codes

***NOTE** – System fault and lockout codes take precedence over system status codes (cooling, heating operating percentages or defrost/dehumidification). Only the latest active fault or lockout codes are displayed (if present). If no fault or lockout codes are active, then system status codes are displayed. Alert codes are also displayed on the S40 thermostat.*

Alert Codes	Inverter Code	Inverter LED Flash Code (number of flashes)		Priority	Alarm Description	Possible Causes and Clearing Alarm
		Red LED	Green LED			
N/A	N/A	ON	OFF	N/A	EL18KCV-024, -036 only: Indicates inverter is operating normally.	
N/A	N/A	ON	ON	N/A	EL18KCV-048, -060 only: Indicates inverter is operating normally.	
N/A	N/A	OFF	OFF	N/A	Indicates inverter is NOT energized.	
E105	N/A	N/A	N/A	Moderate	The outdoor control has lost communication with either the thermostat or indoor unit.	Equipment is unable to communicate. Indicates numerous message errors. In most cases errors are related to electrical noise. Make sure high voltage power is separated from RSBus. Check for miswired and/or loose connections between the stat, indoor unit and outdoor unit. Check for a high voltage source of noise close to the system. Fault clears after communication is restored.
E120	N/A	N/A	N/A	Moderate	There is a delay in the outdoor unit responding to the system.	Typically, this alarm/code does not cause any issues and clears on its own. The alarm/code is usually caused by a delay in the outdoor unit responding to the thermostat. Check all wiring connections. Cleared after unresponsive device responds to any inquiry.
E124	N/A	N/A	N/A	Critical	The S40 thermostat has lost communication with the outdoor unit for more than 3 minutes.	Equipment lost communication with the thermostat. Check the wiring connections and resistance, then cycle the system power. This alarm stops all associated HVAC operations and waits for a signal from the non-communicating unit. The alarm / fault clears after communication is re-established.
E125	N/A	N/A	N/A	Critical	There is a hardware problem with the outdoor control.	There is a control hardware problem. Replace the outdoor control if the problem prevents operation and is persistent. The alarm / fault is cleared 300 seconds after the fault recovers.
E131	N/A	N/A	N/A	Critical	The outdoor unit control parameters are corrupted.	Reconfigure the system. Replace the control if heating or cooling is not available.
E132	N/A	N/A	N/A	Critical	Internal software error.	Replace outdoor control.
E180	N/A	N/A	N/A	Critical	The outdoor unit ambient temperature sensor has malfunctioned. As a result the outdoor unit control will not perform low ambient cooling.	Valid temperature reading is lost during normal operation and after outdoor control recognized sensors. Compare outdoor sensor resistance to temperature/ resistance charts in unit installation instructions. Replace sensor pack if necessary. At the beginning of (any) configuration, furnace or airhandler control detects the presence of the sensor(s). If detected (reading in range), appropriate feature is shown in the S40 thermostat About screen. The alarm / fault clears upon configuration, or when normal values are sensed.
E181	N/A	N/A	N/A	Moderate	Suction pressure transducer fault.	Suction pressure transducer is out of range. The signal should be between 0.5 VDC and 4.5 VDC between blue and black. The error code will be cleared when proper signal is provided.
E182	N/A	N/A	N/A	Moderate	Suction temperature sensor has malfunctioned.	Check temperature sensor in the applicable installation and service procedure. Nominal resistance is 10K Ohms at 77F.
E345	N/A	N/A	N/A	Critical	Heat Pump or Air Conditioner Alert Code - The "O" relay on the outdoor board has failed.	Either the pilot relay contacts did not close, the relay coil did not energize the circuit that confirms this operational sequence is not sensing properly.

TABLE 7. Outdoor Control 7-Segment Display Alert Codes and Inverter LED Flash Codes

***NOTE** – System fault and lockout codes take precedence over system status codes (cooling, heating operating percentages or defrost/dehumidification). Only the latest active fault or lockout codes are displayed (if present). If no fault or lockout codes are active, then system status codes are displayed. Alert codes are also displayed on the S40 thermostat.*

Alert Codes	Inverter Code	Inverter LED Flash Code (number of flashes)		Priority	Alarm Description	Possible Causes and Clearing Alarm
		Red LED	Green LED			
E409	N/A	N/A	N/A	Moderate	Outdoor control secondary voltage is 18VAC or less.	Secondary voltage is below 18VAC. After 10 minutes, operation is discontinued. Check the indoor line voltage and transformer output voltage. The alarm clears after the voltage is higher than 20VAC for 2 seconds or after a power reset.
E410	N/A	N/A	N/A	Moderate	The outdoor unit cycled off due to low suction pressure.	Unit pressure is below the lower limit. The system is shut down. The suction pressure transducer emulates a low pressure switch, the unit does not have a low pressure switch. The cut-out is set at 40 PSIG and the cut-in set at 90 PSIG. Confirm that the system is properly charged with refrigerant. Check TXV, indoor unit blower motor, dirty filters or clogged refrigerant filter. Confirm that the evaporator coil is clean. The alarm clears after the pressure rises above 90 PSIG.
E411	N/A	N/A	N/A	Critical	The low pressure fault has occurred 5 times within one hour. As a result, the outdoor unit is locked out.	Low pressure fault error count reached 5 strikes. The low pressure cut-out is at 40PSIG and resets at 90PSIG. Confirm that the system is properly charged with refrigerant. Check for clogged TXV, blockage to indoor unit blower motor, dirty filters or clogged refrigerant filter. Confirm that the evaporator coil is clean. The alarm clears after a power reset.
E412	N/A	N/A	N/A	Moderate	The outdoor unit high pressure switch has opened.	Unit pressure is above the upper limit. System is shut down. The high pressure switch opens at 590PSIG and closes at 418PSIG. Confirm that the system is properly charged with refrigerant. Check for clogged TXV, blockage to indoor unit blower motor, clogged refrigerant filter. Confirm that the outdoor unit is clean. The alarm clears after the pressure switch closes or a power reset. For heating, indoor CFM may be set too low. For zoning system, zone CFM may be set too low.
E413	N/A	N/A	N/A	Critical	The high pressure switch has opened 5 times within one hour. As a result, the outdoor unit is locked out.	Open high pressure switch error count reached 5 strikes. System is shut down. The high pressure switch for R454B opens at 590PSIG and closes at 418PSIG. Confirm that the system is properly charged with refrigerant. Check condenser fan motor, for clogged TXV, for blockage to indoor unit blower motor, for stuck reversing valve or clogged refrigerant filter. Confirm that the outdoor unit is clean. The alarm clears after a power reset. For heating, indoor CFM may be set too low. For zoning system, zone CFM may be set too low.
E416	N/A	N/A	N/A	Moderate / Critical	The outdoor coil sensor has malfunctioned.	EL18KCV has a fixed 10K ohm resistor installed on the harness connector between pins 5 & 6. Check connections on pins 5 & 6 and check for resistance of 10K ohms. Error code will occur on open or shorted circuit
E422	N/A	N/A	N/A	Moderate	Compressor top cap switch exceeding thermal limit.	The top of the compressor is hot. Refrigerant charge may be low, or low mass flow of refrigerant. Check TXV, clogged filter drier, condenser fan motor, indoor blower motor, confirm indoor coil is clean.
E423	40	4 flashes	OFF	Moderate / Critical	The inverter has detected a circuit problem.	Control locks out after 10 strikes within an hour. To clear, disconnect power to the indoor unit (24VAC power source to the outdoor control) which will power off the outdoor control and will open the outdoor unit contactor, which interrupts power to the inverter and then re-apply power.
E424	N/A	N/A	N/A	Moderate	The liquid line temperature sensor has malfunctioned.	Check connections between pin 3 and 4 of the four pin liquid/ suction temperature plug on the bottom left corner of the control. Check resistance of resistor. Nominal 10K Ohms at 77F. Error code occurs if sensor is open or shorted.
E425	N/A	N/A	N/A	Minor	Outdoor control has increased minimum compressor speed to allow for proper oil return due to low ambient temperature. NOTE - Minimum speed adjustments begin at 45°F and increase to 100% minimum at 17°F.	Outdoor ambient temperature is below system limit. Control attempts to run at lowest allowed compressor speed to allow for proper oil return. Automatically clears when outdoor ambient temperature rises above limit for more than 5 minutes.
E426	N/A	N/A	N/A	Critical	Excessive inverter alarms	After ten faults within one hour, control is locked out, indicating poor system operation. Review history of alarms to resolve system setup. Check condenser fan motor, TXV, indoor unit blower motor, over-charge, undercharge, or clogged refrigerant filter. To clear, disconnect power to the indoor unit (24VAC power source to the outdoor control) which will power off the outdoor control and will open the outdoor unit contactor, which interrupts power to the inverter and then re-apply power. Inverter alarms 12 to 14 and 53 do not count toward this lock out condition.

TABLE 7. Outdoor Control 7-Segment Display Alert Codes and Inverter LED Flash Codes

***NOTE** – System fault and lockout codes take precedence over system status codes (cooling, heating operating percentages or defrost/dehumidification). Only the latest active fault or lockout codes are displayed (if present). If no fault or lockout codes are active, then system status codes are displayed. Alert codes are also displayed on the S40 thermostat.*

Alert Codes	Inverter Code	Inverter LED Flash Code (number of flashes)		Priority	Alarm Description	Possible Causes and Clearing Alarm
		Red LED	Green LED			
E427	21	2 flashes	1 flash	Moderate / Critical	The inverter has detected a DC peak fault condition. If condition (55A or higher) is detected, outdoor unit compressor and fan stop. Anti-short cycle is initiated. If peak current (55A or higher) occurs 10 times within an hour, system is locked out. Indicates high pressure, condenser fan failure, locked compressor rotor or overcharge. To clear, disconnect power to the indoor unit (24VAC power source to the outdoor control) which will power off the outdoor control and will open the outdoor unit contactor, which interrupts power to the inverter and then re-apply power..	
E428	22	2 flashes	2 flashes	Moderate / Critical	The inverter has detected a high main input current condition.	If condition is detected, is detected, outdoor unit compressor and fan stop. Antishort cycle is initiated. If condition occurs 5 times within an hour, system is locked out. Indicates high pressure, condenser fan failure or overcharge. To clear, disconnect power to the indoor unit (24VAC power source to the outdoor control) which will power off the outdoor control and will open the outdoor unit contactor, which interrupts power to the inverter and then re-apply power.
E429	23	2 flashes	3 flashes	Moderate / Critical	On a call for compressor operation, if DC link power in inverter does not rise above 180 VDC for 2 and 3 ton models, 250 VDC for 4 and 5 ton models, within 30 seconds, the control will display a moderate code. If condition is detected, outdoor unit will stop (Compressor and fan). Antishort cycles is initiated. If condition occurs 10 times within a 60 minute rolling time period, system will lock out and display a critical code.	**Issues**: (1) If DC link power in inverter does not rise above 180 VDC for 2- and 3-ton models, 250 VDC for 4- and 5-ton models, within 30 seconds, the outdoor control will display a moderate code. (2) Capacitors on inverter do not properly charge. **Corrective Actions:** (1) Check for proper main power to outdoor unit and for any loose electrical connections.
E430	26	2 flashes	6 flashes	Moderate / Critical	Compressor start failure	If condition is detected, outdoor unit compressor and fan stop. Antishort cycle is initiated. If condition occurs 10 times within an hour, system is locked out. Indicates poor connection at compressor harness, improper winding resistance, locked compressor rotor, or flooded compressor. To clear, disconnect power to the indoor unit (24VAC power source to the outdoor control) which will power off the outdoor control and will open the outdoor unit contactor, which interrupts power to the inverter and then re-apply power.
E431	27	2 flashes	7 flashes	Moderate / Critical	Error occurs when PFC detects an over-current condition of 100A, the control will display a moderate code. If condition is detected, outdoor unit will stop (Compressor and fan). Anti-short cycle is initiated. Inverter is unavailable to communicate with the outdoor control for 3 minutes. If condition occurs 10 times within a 60 minute rolling time period, system will lock out and display a critical code.	**Issues:** (1) Indicates power interruption, brownout, poor electrical connection or loose inverter input wire. (2) System testing was set up and code was generated when the reversing valve is de-energized coming out of defrost (code appears with or without 30 compressor delay). **Corrective Actions:** (1) Check for proper main power to outdoor unit and for any loose electrical connections. (2) To clear, disconnect power to the indoor unit (24VAC power source to the outdoor control) which will power off the outdoor control and will open the outdoor unit contactor, which interrupts power to the inverter and then re-apply power.
E432	28	2 flashes	8 flashes	Moderate / Critical	The inverter has detected a DC link high voltage condition	Error occurs when the DC link capacitor voltage is greater than 480VDC. If condition is detected, outdoor unit compressor and fan stop. Anti-short cycle is initiated. If condition occurs 10 times within an hour, system is locked out. System stops. To clear, disconnect power to the indoor unit (24VAC power source to the outdoor control) which will power off the outdoor control and will open the outdoor unit contactor, which interrupts power to the inverter and then re-apply power.
E433	29	2 flashes	9 flashes	Moderate / Critical	The inverter has detected a compressor over-current condition.	Error occurs when compressor peak phase current is greater than 28A. Inverter issues code 14 first and slows down to try to reduce the current. If the current remains high, outdoor unit compressor and fan stop. Anti-short cycle is initiated. If condition occurs five times within an hour, system is locked out. To clear, disconnect power to the indoor unit (24VAC power source to the outdoor control) which will power off the outdoor control and will open the outdoor unit contactor, which interrupts power to the inverter and then re-apply power.

TABLE 7. Outdoor Control 7-Segment Display Alert Codes and Inverter LED Flash Codes

***NOTE** – System fault and lockout codes take precedence over system status codes (cooling, heating operating percentages or defrost/dehumidification). Only the latest active fault or lockout codes are displayed (if present). If no fault or lockout codes are active, then system status codes are displayed. Alert codes are also displayed on the S40 thermostat.*

Alert Codes	Inverter Code	Inverter LED Flash Code (number of flashes)		Priority	Alarm Description	Possible Causes and Clearing Alarm
		Red LED	Green LED			
E434	53	5 flashes	3 flashes	Moderate / Critical	Outdoor control has lost communications with the inverter for greater than 3 minutes. Outdoor unit will stop all compressor demand. Outdoor control will attempt to establish communication multiple times and will automatically clear when the error clears. Unit will lock out after 60 minutes if communication is not established and will display a critical error code.	**Issues**: (1) Outdoor disconnect is off or outdoor power is off, when indoor power is on (source for 24VAC) (2) Loose electrical power connections (3) interruption of main power to the inverter (4) Generator powers indoor unit, but not the outdoor unit. **Corrective Actions:** (1) To reset, cycle the indoor power off (source of 24VAC to outdoor unit) and back on. This will de-energize outdoor control and inverter by cycling the contactor. (2) Make sure the disconnect is on (3) check electrical power supply connections (4) Check for proper main 230V power supply
E435	60	6 flashes	OFF	Moderate / Critical	Inverter internal error	When this error occurs, the outdoor control cycles power to the inverter by opening the contactor for two minutes. Check that the EEPROM is properly seated. After power is cycled to the inverter 3 times, the outdoor unit is locked out. If problem persists, replace the inverter.
E436	62	6 flashes	2 flashes	Moderate / Critical	Inverter heat sink temperature exceeded limit. Occurs when the heat sink temperature exceeds the inverter limit. Inverter issues code 13 first, then slows down to allow the heat sink to cool. If temperature remains high, outdoor unit stops (compressor and fan). Anti-short cycle is initiated. If condition occurs 5 times within an hour, system is locked out. To clear, disconnect power to the indoor unit (24VAC power source to the outdoor control) which will power off the outdoor control and will open the outdoor unit contactor, which interrupts power to the inverter and then re-apply power.	**Issue**: This error may occur if the outdoor fan fails to operate or the inverter heat sink is obstructed with debris. Feedback from supplier tear down of inverter indicates that the screws that hold the inverter to the inverter board were loose causing poor contact between these two components. **Corrective Action**: Tighten screws that hold the heat sink to the inverter control board. **NOTE**: Wait five minutes to allow capacitor to discharge before checking screws.
E437	65	6 flashes	5 flashes	Moderate / Critical	Heat sink temperature sensor fault has occurred (temperature less than 4ºF or greater than 264ºF after 10 minutes of operation).	Occurs when the temperature sensor detects a temperature less than 0.4ºF or greater than 264ºF after 10 minutes of operation. If condition is detected, outdoor unit will stop (compressor and fan). Anti-short cycle is initiated. If condition occurs 5 times within an hour, system will lock out. To clear, disconnect power to the indoor unit (24VAC power source to the outdoor control) which will power off the outdoor control and will open the outdoor unit contactor, which interrupts power to the inverter and then re-apply power. If problem persists, replace inverter.
E438	73	7 flashes	3 flashes	Moderate / Critical	The inverter has detected a PFC over current condition. This would be caused by a high load condition, high pressure, or outdoor fan failure. Outdoor control will display the code when the inverter has the error. After 3 minutes, the inverter will reset and the compressor will turn on again. If it happens 10 times within a 60 minute rolling time period, the OD control will lock out operation of the outdoor unit and display a critical code.	**Issue**: Possible issue is system running at high pressures. Check for high pressure trips or other alert codes in room thermostat and outdoor control. To clear, disconnect power to the indoor unit (24VAC power source to the outdoor control) which will power off the outdoor control and will open the outdoor unit contactor, which interrupts power to the inverter and then re-apply power.
E439	12	1 flash	2 flashes	Minor	Compressor slowdown due to high input current.	This error code is primarily for informational purposes as the inverter controls the compressor to operate within design parameters. Typically the inverter will make a minor speed reduction of 4 Hz (approximately a 5-6% speed reduction) for a brief period of time and to reduce the input current and will then resume normal operation.

TABLE 7. Outdoor Control 7-Segment Display Alert Codes and Inverter LED Flash Codes

***NOTE** – System fault and lockout codes take precedence over system status codes (cooling, heating operating percentages or defrost/dehumidification). Only the latest active fault or lockout codes are displayed (if present). If no fault or lockout codes are active, then system status codes are displayed. Alert codes are also displayed on the S40 thermostat.*

Alert Codes	Inverter Code	Inverter LED Flash Code (number of flashes)		Priority	Alarm Description	Possible Causes and Clearing Alarm
		Red LED	Green LED			
E440	13	1 flash	3 flashes	Minor	Heat sink temperature is approaching limit. The compressor speed automatically slows to reduce heat sink temperature. The control sets indoor CFM and outdoor RPM to values according to demand percentage rather than the actual Hz. Alarm is automatically cleared.	This error code is primarily for informational purposes as the inverter controls the compressor speed to operate within design parameters. Typically the inverter will make a minor speed reduction of 4 Hz (approximately a 5-6% speed reduction) for a brief period of time and to reduce the heat sink temperature and will then resume normal operation. This may occur at high outdoor temperatures (above 110ºF) for brief periods of time (3 – 4 minutes) and is normal and expected operation of the inverter controlling the compressor safely within design parameters. The inverter finned aluminum heat sink is located on the back side of the inverter in the condenser air stream. f the alert code 440 occur frequently, especially at lower outdoor temperatures, check the heat sink for debris that may reduce heat transfer or possible obstructions that may impact air flow across the heat sink. The inverter will begin to briefly reduce the compressor speed when the heat sink temperature rises above 185ºF and will allow the inverter to resume the requested compressor demand speed once the inverter heat sink reaches 176ºF. The heat sink temperature, compressor speed in Hertz and the Inverter Compressor Speed Reduction status (“On” or “Off ”) notification can be viewed under the outdoor unit Diagnostics section of the thermostat dealer control center on units installed with an S40 thermostat.
E441	14	1 flash	4 flashes	Minor	Compressor slowdown due to high compressor current. Compressor current is approaching limit. The compressor speed automatically slows. The control sets indoor CFM and outdoor RPM to values according to demand percentage rather than the actual Hz. Alarm is automatically cleared.	This error code is primarily for informational purposes as the inverter controls the compressor to operate within design parameters. Alert code 441 typically occurs at startup as the compressor as the currently increases rapidly during startup. The inverter will reduce the compressor speed by 4 hz and slow the compressor ramp up speed to the requested compressor demand (capacity). This is normal and expected operation of the inverter to control the compressor within design parameters. In most cases the alert code 441 does not require any additional service or diagnostic procedures. E441 may also occur if the system is operating at high pressures.
E442	N/A	N/A	N/A	Critical	The top cap switch has opened five times within one hour. As a result, the outdoor unit is locked out.	When compressor thermal protection sensor opens five times within one hour, outdoor stops working. To clear, disconnect power to the indoor unit (24VAC power source to the outdoor control) which will power off the outdoor control and will open the outdoor unit contactor, which interrupts power to the inverter and then re-apply power.
E443	N/A	N/A	N/A	Critical	Incorrect appliance unit size code selected.	Check for proper configuring of unit size codes for outdoor unit in configuration guide or in installation instructions. If replacing inverter, verify inverter model matches unit size. The alarm/ fault clears after the correct match is detected following a reset. Remove the thermostat from the system while applying power and reprogramming.
E600	N/A	N/A	N/A	Minor	Compressor has been cycled OFF on utility load shedding.	Load shedding function: Provides a method for a local utility company to limit the maximum power level usage of the outdoor unit. The feature is activated by applying 24 volts AC power to the L and C terminals on the outdoor control.
E601	N/A	N/A	N/A	Minor	Outdoor unit has been cycled OFF on low temperature protection.	Low temperature protection: Outdoor unit will not operate when the outdoor temperature is at or below 4°F (20°C). If the unit is operating and the outdoor temperature drops below 4°F (20°C), the unit continues to operate until the room thermostat is satisfied or the outdoor temperature drops to 15°F (26°C). Outdoor unit ambient sensor provides temperature readings.

POWER-UP / RESET:

FIRMWARE VERSION: During initial power-up or reset, the first item displayed is the outdoor control firmware version. Example to the right shows firmware version 2.3.

UNIT TYPE: The next item displayed is the self discovery unit type. AC = air conditioner and HP = heat pump. If the unit type cannot be determined, three bars appear.

UNIT NOMINAL CAPACITY: The next item to be displayed is the self-discovery unit nominal capacity. Valid capacities are 24 for 2-ton, 36 for 3-ton, 48 for 4-ton and 60 for 5-ton units. If the unit type cannot be determined, three bars appear.

UNIT CODE: The next item to be displayed is the self discovery unit code. (may be a single character or two characters). If the unit code cannot be determined, three bars appear.

UNIT CODE	UNIT TYPE, SIZE AND MODEL	
≡	NOT PROGRAMMED	
80	2-TON AIR CONDITIONER	EL18KCV-024
81	3-TON AIR CONDITIONER	EL18KCV-036
82	4-TON AIR CONDITIONER	EL18KCV-048
83	5-TON AIR CONDITIONER	EL18KCV-060

7-SEGMENT POWER-UP DISPLAY STRING

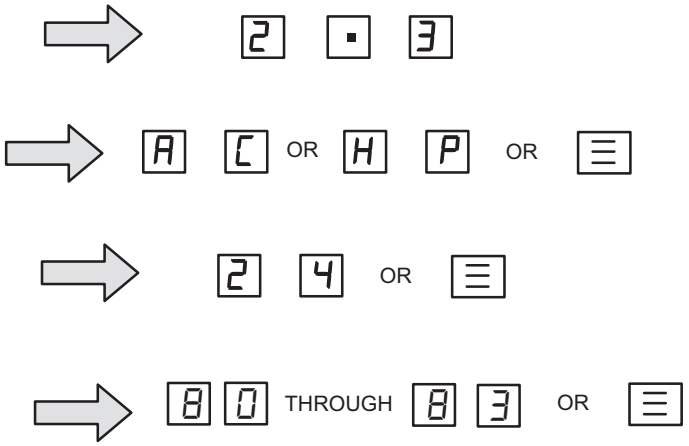

(These are just examples of firmware version, unit type, unit nominal capacity and unit codes.)

7-SEGMENT POWER-UP DISPLAY STRING EXAMPLE

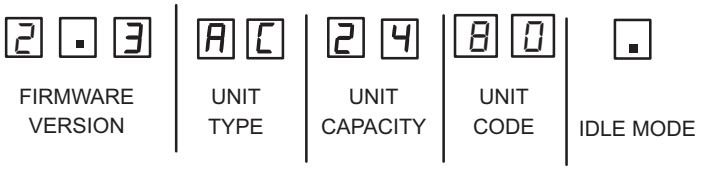

FIGURE 16. Outdoor Control 7-Segment Unit Status Displays

TABLE 8. Outdoor Control 7-Segment Unit Status Displays

Description	Example of Display
Idle Mode: Decimal point flashes at 1 Hz.	**Idle Mode**: Decimal point flashes at 1 Hz (0.5 second on, 0.5 second off). Display OFF.
Soft Disable Mode: Top and bottom horizontal line and decimal point flash at 1 Hz. If indoor or outdoor control displays Soft Disable code: 1) Confirm proper wiring between all devices (thermostat, indoor and outdoor). 2) Cycle power to the control that is displaying the Soft Disable code. 3) Put the room thermostat through Setup. 4) Go to Setup/System Devices/Thermostat/Edit/push Reset. 5) Go to Setup/System Devices/Thermostat/Edit/push Reset All. If the room thermostat detects a new device or a device that is not communicating, it sends a Soft Disable. When this occurs, Alarm 10 is activated and the room thermostat sends a Soft Disable command to the offending device on the bus (outdoor control, IFC, AHC, EIM or Damper Control Module).	**Soft Disable Mode**: Top and bottom horizontal line and decimal point flash at 1 Hz (0.5 second on, 0.5 second off). The control in Soft Disable Mode is indicated by the following: • On AHC, IFC and outdoor controls, Soft Disable Mode is indicated by flashing double horizontal lines on the 7-segment display. • On the Damper Control Module and EIM, the green LED will blink 3 seconds on and 1 second off.
O.E.M. Test Mode	All segments flashing at 2 Hz (unless error is detected). NOTE - Control should be replaced.
Anti-Short-Cycle Delay	The middle line flashes at 1 Hz for 2 seconds, followed by a 2-second display of the number of minutes left on the timer (value is rounded up: 2 min. 1 sec. is displayed as 3). If activated, the anti-short cycle delay time remaining is displayed (default is 300 sec./5 min.).
Cooling Capacity: Shows cooling stage C1 or C2 operating if non-communicating. Shows cooling capacity percentage i.e. C70 operating if installed with a S40 communicating thermostat. Example to the right indicates a cooling demand of 50 percent.	Cooling compressor capacity (1second on, 0.5 second off) followed by ambient temperature. Non-Communicating thermostat with second stage cooling active and ambient of 95F : C 2 pause A 9 5 repeat. S40 communicating thermostat with 70% demand and ambinet of 95F: C 7 0 pause A 9 5 Repeat C 5 0 pause A 7 6
Diagnostic recall: Shows the last 10 stored diagnostic error codes.	If first error is E 2 5 0, second E 2 3 1 pause E 2 5 0 pause E 2 3 1 Next codes (up to 10) are shown using same method.
Fault memory clears	If there are no error codes stored: E pause 0 0 0. After the fault memory is cleared, the following string flashes every 0.5 seconds: 0 0 0 0 pause
Active error in outdoor control Idle mode: Show all active error(s) codes.	Following display string is repeated if Error E 125 and E 201 are present: E 1 2 5 pause E 2 0 1
Active error in run mode: Show current status and all active error(s) codes.	Following display string is repeated if Error E 440 is present while cooling demand is 80 percent: C 8 0 pause E 4 4 0
Outdoor Ambient Temperature (OAT): Any time OAT is within operating range, value is displayed if unit is in diagnostic and non-diagnostic modes.	Following display string is repeated if cooling is active and OAT is 104°F: C 3 5 pause A 1 0 4 pause
Liquid Line Temperature (LIQ): Any time LIQ is sensed in operating range, value is displayed if unit is in diagnostic mode or manually enabled for non-diagnostic modes.	Following display string is repeated if cooling is active and LIQ is 105°F: C 3 1 pause L 1 0 5 pause
Charge Mode: When unit is in the charge mode, Suction pressure (SPxxx), Suction Temp (Stxx.x), Superheat (SHxx.x), Liquid pressure (LPxxx), Liquid Temp (Ltxx.x) and subcooling (SCxx.x) will be scrolled on the 7-segment display	The following string is repeated: S P 1 3 5 pause S t 6 2 pause S H 1 5 pause L P 3 4 5 pause L t 9 6 pause S C 1 0 Repeat

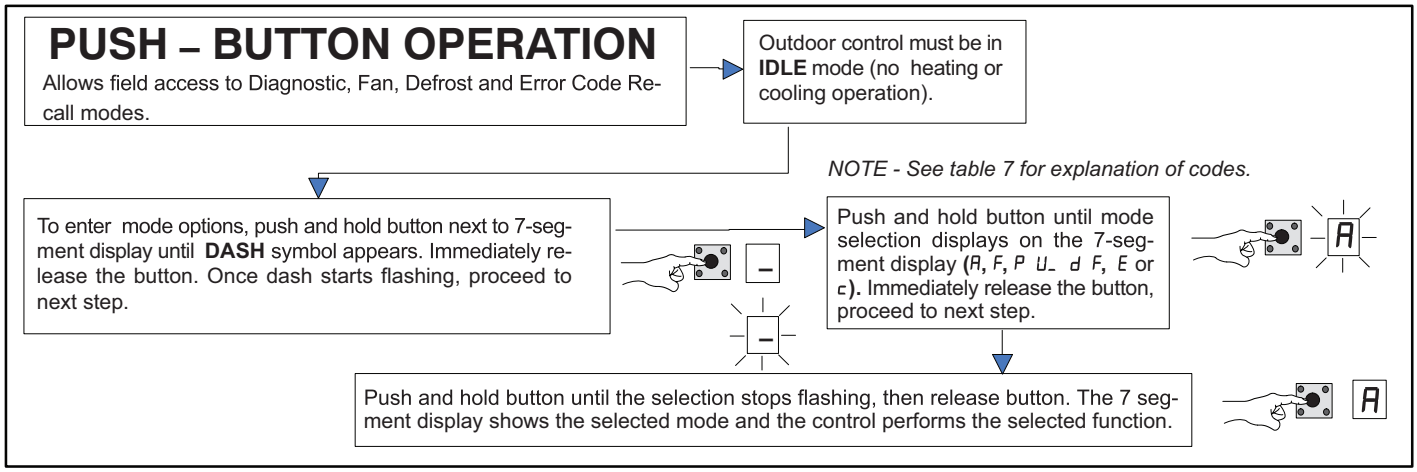

FIGURE 17. Push-Button Operation

Unit Selection Code for Outdoor Control

If the single-character display shows three (3) horizontal lines, the unit selection code needs to be programmed. Press and hold the button until the P U menu option is displayed, release button. The single-character display displays the selected mode per example in figure 15 on page 36. When the desired unit selection code appears, press and hold the button until it stops flashing, then release.

Unit Code	Unit Type	Unit Model
80	2-ton air conditioner	EL18KCV-024
81	3-ton air conditioner	EL18KCV-036
82	4-ton air conditioner	EL18KCV-048
83	5-ton air conditioner	EL18KCV-060

Idle mode – System is energized with no demand – Decimal flashes at 1 Hertz > 0.5 second ON. 0.5 second OFF		
Display Symbol or Character	**Display**	**Fan Test and Display String Option**
Displayed during start-up or power recycling	Display string shows outdoor control firmware version 1 _ 6 > pause > A C or H P unit > pause > unit capacity in BTUs > pause > unit code. If 3 horizontal bars are displayed during any sequence of this display string, it indicates that the specific parameter is not configured.	
.	Idle mode — decimal flashes at 1 Hertz > 0.5 second ON, 0.5 second OFF	
C	Indicates cooling Capacity. C1 or C2 if conventional 24VAC thermostat or demand percentage if S40 communicating thermostat is used i.e. C 9 0	
F	Indicates you are in the outdoor fan test mode	**Control must be in Idle mode**: To enter fan test option - F mode, push and hold button until solid – appears, release button. Display begins flashing. Within 10 seconds, push and hold button until required symbol F displays, release button. Display begins flashing. Within 10 seconds, push and hold button until display stops flashing, release button. Control will initiate outdoor fan operation. Outdoor fan cycles ON for 10 minutes at the highest speed. To exit test – Push and hold button until three horizontal bars display. Release button, outdoor fan cycles **OFF**.
A	A in the display string represents the ambient temperature in °F at the sensor on the outdoor unit.	**Control can be in Idle or demand mode**: To enter display configuration option - A mode, push and hold button until solid – appears, release button. Display begins flashing. Within 10 seconds, push and hold button until required symbol A displays, release button. Display begins flashing. Within 10 seconds, push and hold button until display stops flashing, release button. Display shows error (E) code(s) and ambient (A), outdoor coil (c) and liquid (L) temperatures in Fahrenheit. ***NOTE** - If button is not pushed in the 10-second time period, the control exits the test mode. If this occurs, test mode must be repeated.*

Error Code Recall Mode (NOTE – control must be in idle mode)	
E	To enter error code recall mode, push and hold button until solid E appears, then release button. Control displays up to 10 error codes stored in memory. If E 0 0 0 0 is displayed, there are no stored error codes.
≡	To exit error code recall mode, push and hold button until solid three horizontal bars appear, then release button. Note - Error codes are not cleared.
c	To clear error codes stored in memory, continue to hold button while the 3 horizontal bars are displayed. Release button when solid c is displayed.
c	Push and hold for one (1) second, release button. 7-Segment displays 0 0 0 0 and exits error recall mode.

FIELD TEST MODE OPERATION

The field test mode allows the unit to be put into diagnostic mode and allows the installer to perform multiple tests on the control / unit.

Diagnostic Mode

Diagnostic mode is only available when the system is idle or during an active / suspended call for heating or cooling. Diagnostic mode is terminated when the exit command is given, the button is pressed and released without entering the diagnostic menu or 10 minutes has passed, whichever comes first.

When this mode is selected all installed temperature sensor valves (non-open and non-short) are shown on the 7-segment display. The following system status codes are displayed:

- Cooling
- Cooling stage or cooling percentage demand operation
- Active error codes

Outdoor Fan Mode

Diagnostic mode is only available while the system is in idle mode. This mode can be exited with the proper command or after 10 minutes has passed.

In diagnostic mode, the control energizes the outdoor fan at the highest speed.

CHARGE MODE OPERATION

To initiate the EL18KCV Charge Mode function, install the jumper across the two Charge Mode Pins (CHRG MODE) on the outdoor control. The Charge Mode can be used when charging the system with refrigerant, checking the refrigerant charge, pumping down the system and performing other service procedures that requires outdoor unit operation at 100% capacity.

EL18KCV Charge Mode Operation with a S40 Communicating Thermostat

Installing a jumper on the Charge Mode Pins will initiate compressor operation and outdoor fan motor at 100% capacity and will provide a signal to the indoor unit to initiate indoor blower operation at the maximum cooling air volume. To exit the charge mode, remove the Charge Mode Jumper. The Charge Mode has a maximum time of 60 minutes and will automatically exit the charge mode after 60 minutes is the charge mode jumper is left in place.

EL18KCV Charge Mode Operation with a Conventional 24VAC Non-Communicating Thermostat

On applications with a conventional 24VAC non-communicating thermostat, the charge mode jumper must be installed on the Charge Mode Pins after providing a Y1 cooling demand to the EL18KCV to initiate the Charge Mode. A cooling blower demand must also be provided to initiate blower operation on the cooling speed on the indoor unit. The compressor and outdoor fan motor will operate at 100% capacity. To exit the charging mode, remove the Charge Mode Jumper and remove the Y1 Cooling demand and indoor blower demand. The Charge Mode has a maximum time of 60 minutes and will automatically exit the charge mode after 60 minutes is the charge mode jumper is left in place.

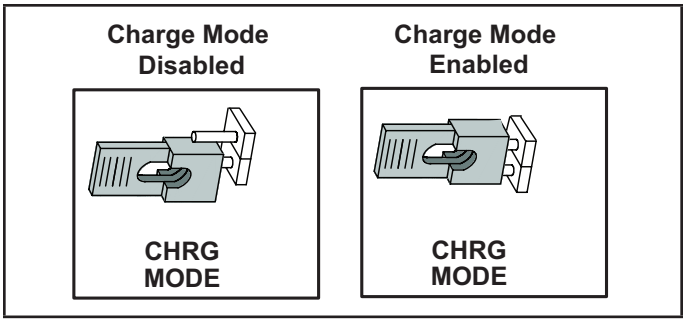

TABLE 9. Field Test, Diagnostic Recall and Program Menu Options

Display	Display and action (normal operation)
No Change - idle (*)	**No Change - idle (*)**
Solid .	Enter or exit field test and program mode.
Solid A	Puts unit in diagnostic mode. (Displays ambient temperatures and any active error codes.)
Solid c	Clears error history (**)
Solid E	Enter diagnostic recall mode. Displays up to 10 error codes in memory.
Solid F	Starts outdoor fan.
String P U	Enter unit code programming.

*No change indicates the display will continue to show whatever is currently being displayed for normal operations.

**Note once the error history is deleted it cannot be recovered. After the history is deleted, the unit will reset itself.

Display	Display and action (normal operation)
.	Idle mode — decimal flashes at 1 Hertz > 0.5 second ON, 0.5 second OFF
C	Cooling operation. Shows cooling stage C1 or C2 operating if non-communicating. Shows cooling capacity percentage i.e. C 7 0 operating if installed with a S40 communicating thermostat. Example: C 2 0 pause A 7 5
E	E in the display string represents the active error code(s) in the outdoor unit. Example: C 5 0 pause E 4 4 pause E 4 4 2 pause A 7 5 pause
A	A in the display string represents the outdoor ambient temperature in °F at the outdoor sensor on the outdoor unit. Example: C 5 0 pause A 7 5
Scrolling	When unit is in the charge mode, Suction pressure (SPxxx), Suction Temp (Stxx.x), Superheat (SHxx.x), Liquid pressure (LPxxx), Liquid Temp (Ltxx.x) and subcooling (SCxx.x) will be scrolled on the 7-segement display. Example: S P 1 3 5 pause S t 6 2 pause S H 1 5 pause L P 3 4 5 pause L t 9 6 pause S C 1 0 Repeat

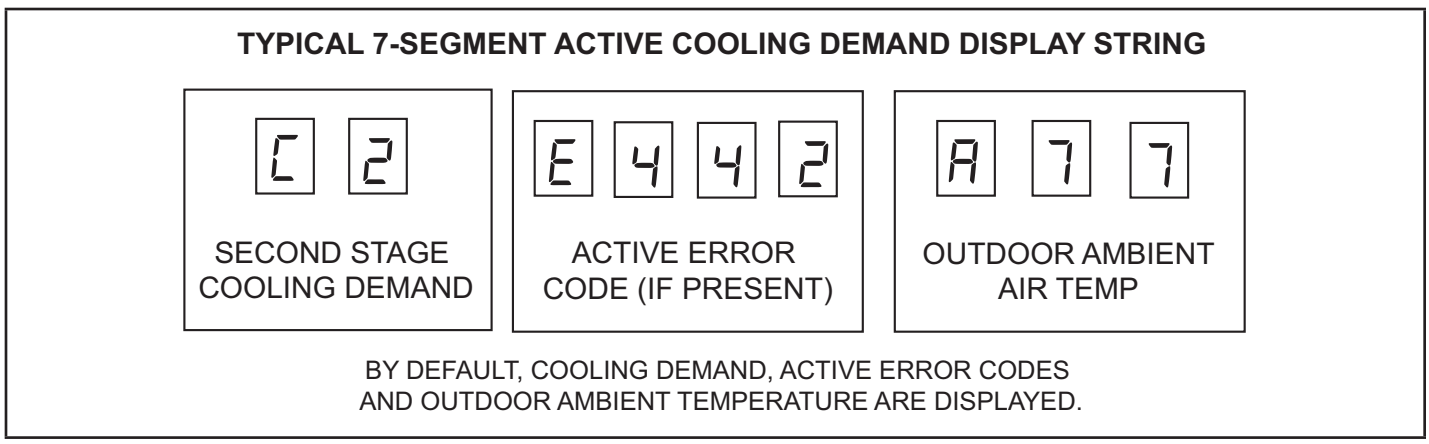

FIGURE 18. Typical 7-Segment Demand Display String

Configuring Unit

When installing a replacement outdoor control, the unit selection code may have to be manually assigned using the 7-segment display and push button on the control. The unit code sets unit type, capacity and outdoor fan profile.

Configuring Unit Selection Code

Power-up - Unit selection code (two-digit number) displayed represents unit size code (outdoor unit capacity).
During initial power-up, firmware version, unit type, unit capacity and unit selection code will appear on the 7-segment display.

If three horizontal bars are shown in the 7-segment display during power-up, the outdoor control did not store the last configuration setting. If this happens, the configuration sequence for that setting must be repeated.

Outdoor control is in **IDLE** mode (No heating or cooling demand)

Yes

No

Turn room thermostat to **OFF**

To enter **unit selection mode**, push and hold the button next to the 7-segment display until **dash** symbol appears and immediately release button. Once dash starts flashing, proceed to next step.

Push and hold button until the solid PU sequence is displayed on the 7-segment display then immediately release the button. This configuration sequence allows the installer to select unit selection code (number combination) that matches the outdoor unit type and inverter.

UNIT SELECTION CODE

P U

Press and hold the button during the PU cycling display.

NOTE - Either the PU sequence will repeat 5 times and if a selection is not made the control will return to idle mode.

NOT SELECTED

SELECTED

1. When the correct unit section code is displayed, release button immediately. [Display flashes.]
2. Push and hold button until selection stops flashing during one of the three cycles. [Release push button]
3. If selection is not made during those three cycles the control returns to idle mode.

UNIT SELECTION CODES	UNIT	
80	2-TON AIR CONDITIONER	EL18KCV-024
81	3-TON AIR CONDITIONER	EL18KCV-036
82	4-TON AIR CONDITIONER	EL18KCV-048
83	5-TON AIR CONDITIONER	EL18KCV-060

NOT SELECTED

SELECTED

The outdoor control stores the unit type, automatically exits the configuration mode and resets.

If three horizontal bars display in any part of the 7-segment display string during power-up, the outdoor control did not store the unit selection code. If this occurs, the configuration sequence for that section of the display string must be repeated.

EXAMPLE 7-SEGMENT DISPLAY STRING

2 . 3 — FIRMWARE VERSION

A C — UNIT TYPE

2 4 — UNIT CAPACITY

8 0 — UNIT CODE

. — IDLE MODE (NO DEMAND)

FIGURE 19. Configuring Unit Selection Code

Reconfiguring Outdoor Control using S40 Thermostat

If any component of the HVAC system is changed, e.g. replacing an outdoor sensor, reconfiguring the system is required. To begin reconfiguring a system, enter Dealer Control Center, select Equipment, select Reset, select Reconfigure System.

System Overview

Refer to the applicable Thermostat Installer Setup Guide for configuration procedures.

The outdoor control provides the following functions:

- Internal switching of outputs.
- Compressor anti-short-cycle delay (adjustable through the thermostat interface).
- Five-strike lockout function.
- High Pressure protection using the High Pressure Switch (S4) and Low Pressure Pressure protection using the Suction Pressure Transducer with setpoints that emulates a low pressure switch. (Cut-out of 40 psig and cut-in of 90 psig).
- Ambient (RT13), liquid line (RT36) and suction line (RT41) temperatures for monitoring and protection.

COMPRESSOR PROTECTION – FIVE-STRIKE LOCKOUT

The five-strike lockout function is designed to protect the compressor from damage. The five-strike feature is used for both high (S4) and low (S87) pressure switches.

Resetting Five-Strike Lockout

Once the condition has been rectified, power to the outdoor control R terminal must be cycled OFF.

Diagnostic Information

The following diagnostic information is available through the thermostat's user interface. Refer to the applicable Installer System Setup Guide.

- Compressor anti-short-cycle delay timer status
- Cooling stage or cooling rate
- Compressor shift delay timer status
- High pressure switch status
- Suction pressure
- Compressor top cap switch status
- Liquid line and suction line temperature
- Outdoor ambient temperature
- Compressor active alarm
- Compressor Hz
- Inverter compressor short cycle
- Heat sink temperature

Installer Test – Using the S40 Thermostat or Lennox Dealer Setup App

Verify the proper operation of the system by running the Installer Test feature through the thermostat interface. Refer to the applicable Installer System Setup Guide.

COMPRESSOR SHORT CYCLING DELAY

The outdoor control protects the compressor from:

Short cycling (five minutes) during initial power-up.

Interruption in power to the unit.

Pressure or sensor trips.

Delay after demand is removed.

The delay is set by default for 300 seconds (five minutes) but can be changed through the thermostat interface.

Available settings are 60, 120, 180, 240 and 300 seconds.

CRANKCASE HEATER (HR1)

Compressors in all units are equipped with a belly-band-type crankcase heater; 25 watt in -024 and -036 units, 40 watt in -048 and -060 units. HR1 prevents liquid from accumulating in the compressor. HR1 is controlled by the crankcase heater thermostat.

CRANKCASE HEATER THERMOSTAT (S40)

Thermostat S40 controls the crankcase heater in all units. S40 is located on the crankcase heater belly band. When compressor shell temperature drops below 50°F, thermostat S40 closes, energizing HR1. The thermostat opens, de-energizing HR1, once compressor shell temperature reaches 70°F.

Maintenance

Outdoor Unit

Maintenance and service must be performed by a qualified installer or service agency. At the beginning of each cooling season, the system should be checked as follows:

1 - Clean and inspect outdoor coil (may be flushed with a water hose). Ensure power is off before cleaning.

2 - Outdoor unit fan motor is factory-lubricated and sealed. No further lubrication is needed.

3 - Visually inspect all connecting lines, joints and coils for evidence of oil leaks.

4 - Check all wiring for loose connections.

5 - Check for correct voltage at unit (unit operating).

6 - Check amp draw on outdoor fan motor.

7 - Inspect drain holes in coil compartment base and clean if necessary.

NOTE *- If insufficient heating or cooling occurs, the unit should be gauged and refrigerant charge should be checked.*

Outdoor Coil

It may be necessary to flush the outdoor coil more frequently if it is exposed to substances which are corrosive or which block airflow across the coil (e.g., pet urine, cottonwood seeds, fertilizers, fluids that may contain high levels of corrosive chemicals such as salts).

- Outdoor Coil — The outdoor coil may be flushed with a water hose.
- Outdoor Coil (Coastal Area) — Moist air in ocean locations can carry salt, which is corrosive to most metal. Units that are located near the ocean require frequent inspections and maintenance. These inspections will determine the necessary need to wash the unit including the outdoor coil. Consult your installing contractor for proper intervals/procedures for your geographic area or service contract.

Indoor Unit

1 - Clean or change filters.

2 - Lennox blower motors are factory-lubricated and permanently sealed. No more lubrication is needed.

3 - Adjust blower speed for cooling. Measure the pressure drop over the coil to determine the correct blower CFM. Refer to the unit information service manual for pressure drop tables and procedure.

4 - Check all wiring for loose connections.

5 - Check for correct voltage at unit. (blower operating)

6 - Check amp draw on blower motor.

Indoor Coil

1 - Clean coil if necessary.

2 - Check connecting lines, joints and coil for evidence of oil leaks.

3 - Check condensate line and clean if necessary.

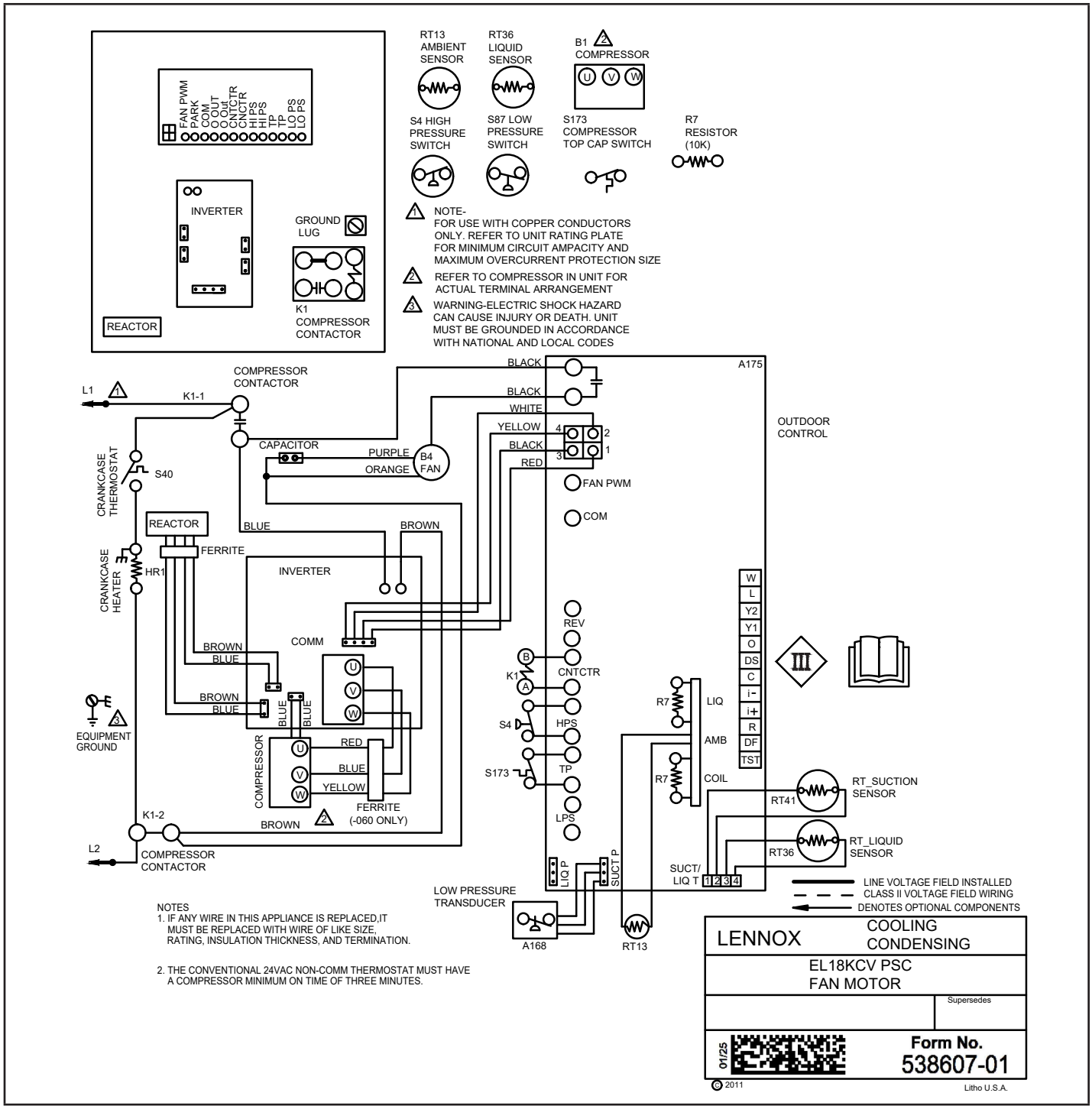

FIGURE 20. Typical Unit Wiring – EL18KCV-024, -048

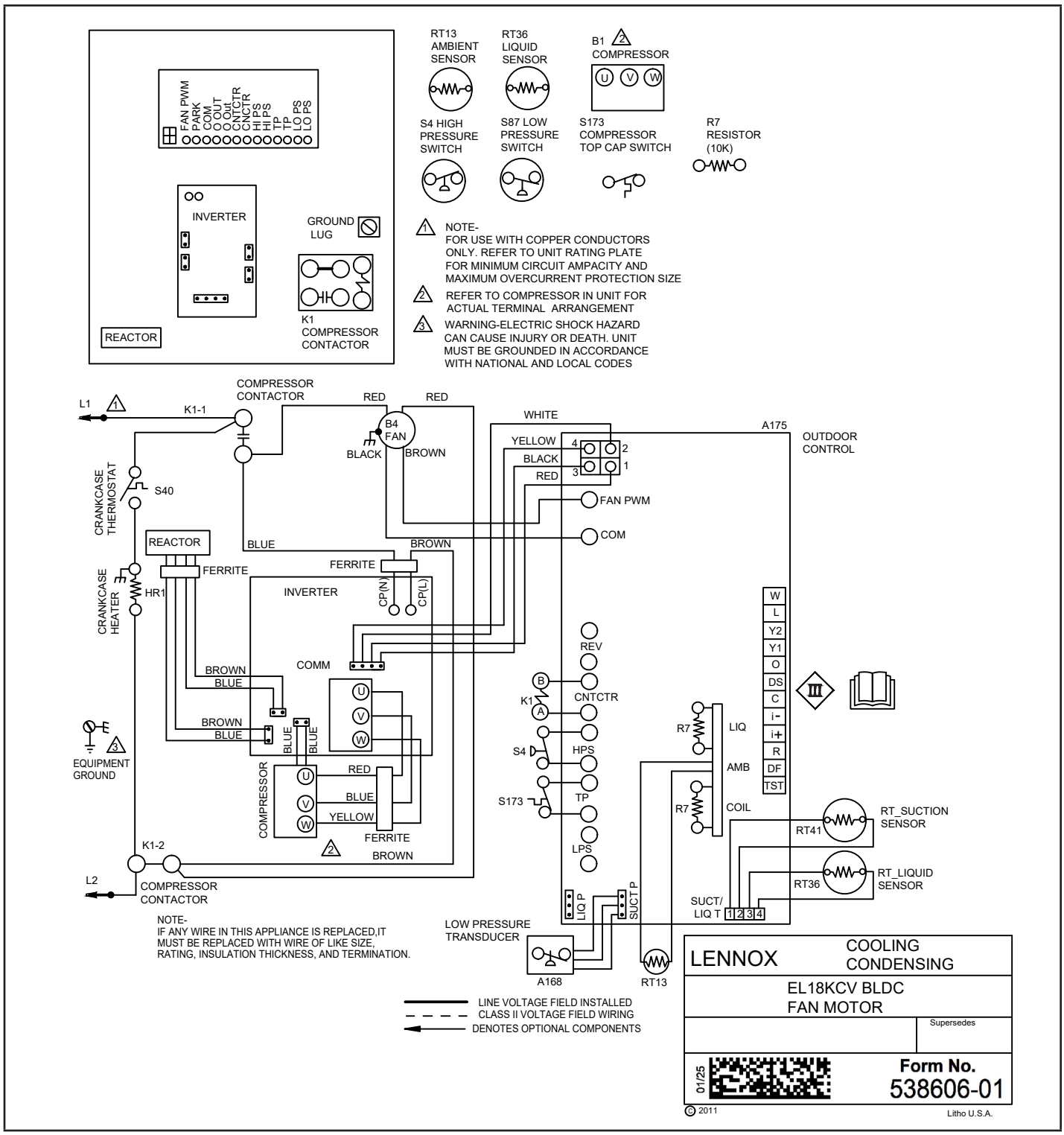

FIGURE 21. Typical Unit Wiring – EL18KCV-036, -060

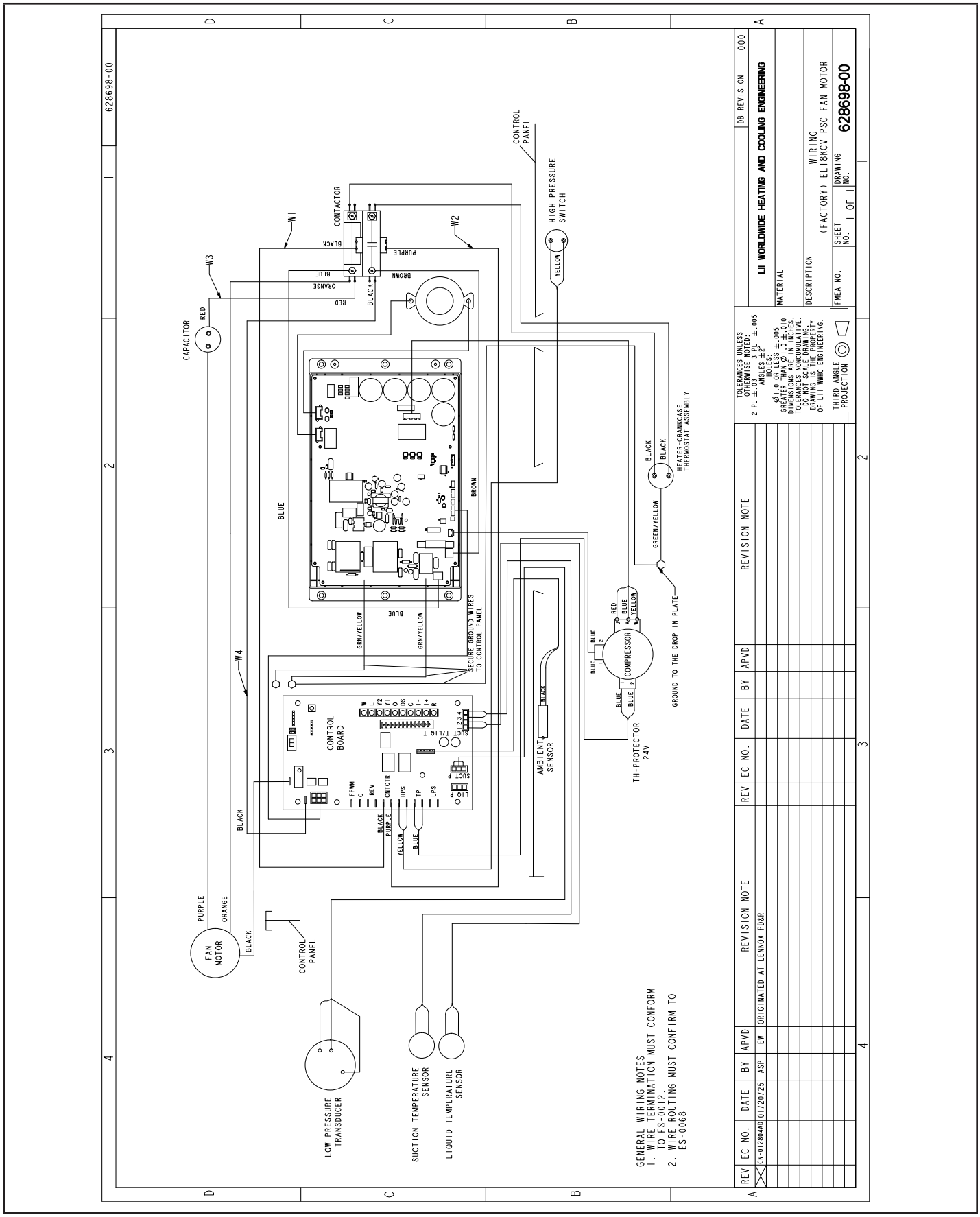

FIGURE 22. Typical Factory Wiring – EL18KCV-024, -048

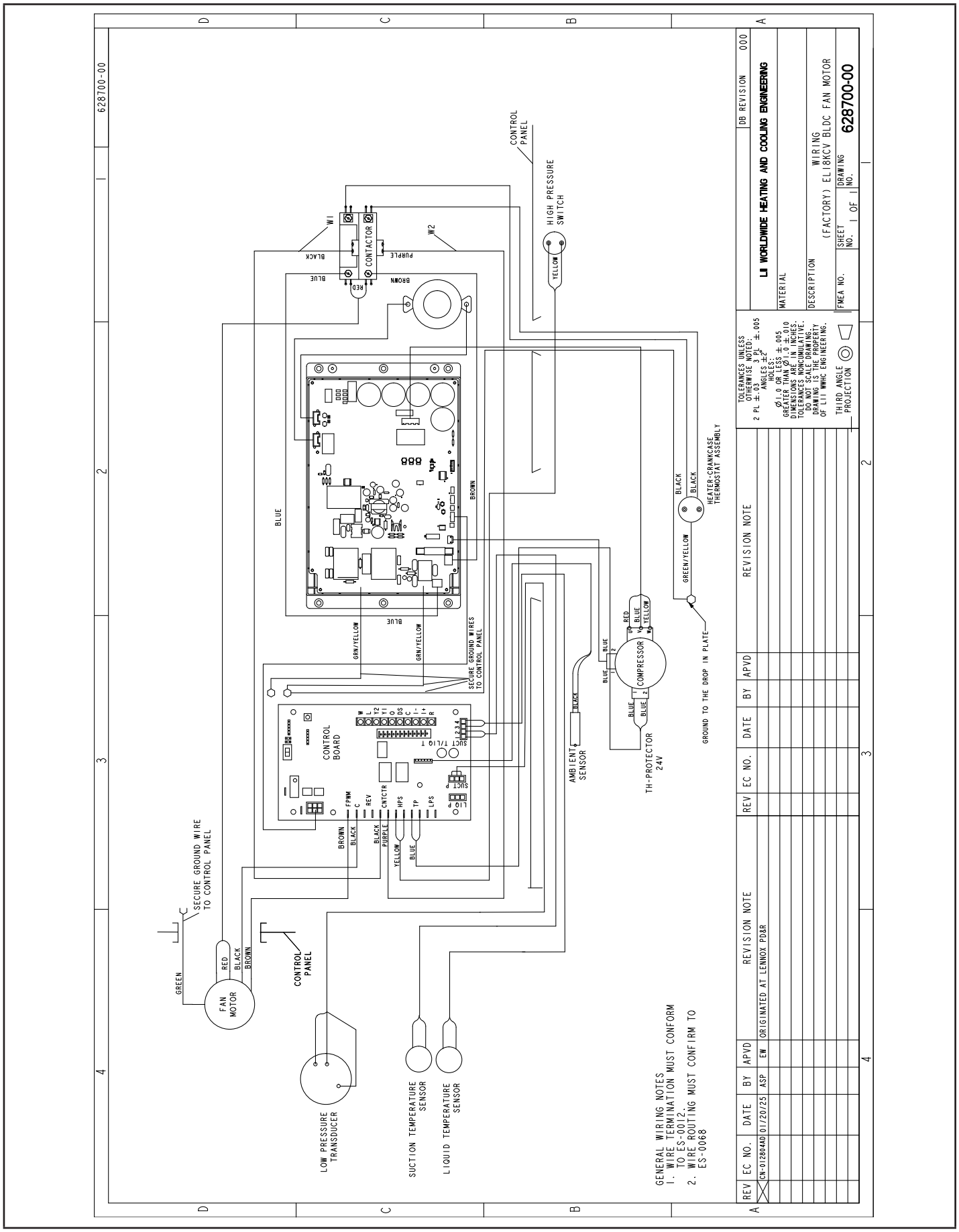

FIGURE 23. Typical Factory Wiring – EL18KCV-036, -060

Unit Sequence of Operation

The following figures illustrate the overall unit sequence of operation along with the operation of various pressure switches and temperature sensors. The figures also illustrate the use of the compressor anti-short-cycle function in relation to unit Status, unit Fault and lockout LED Codes and unit system operation interactions.

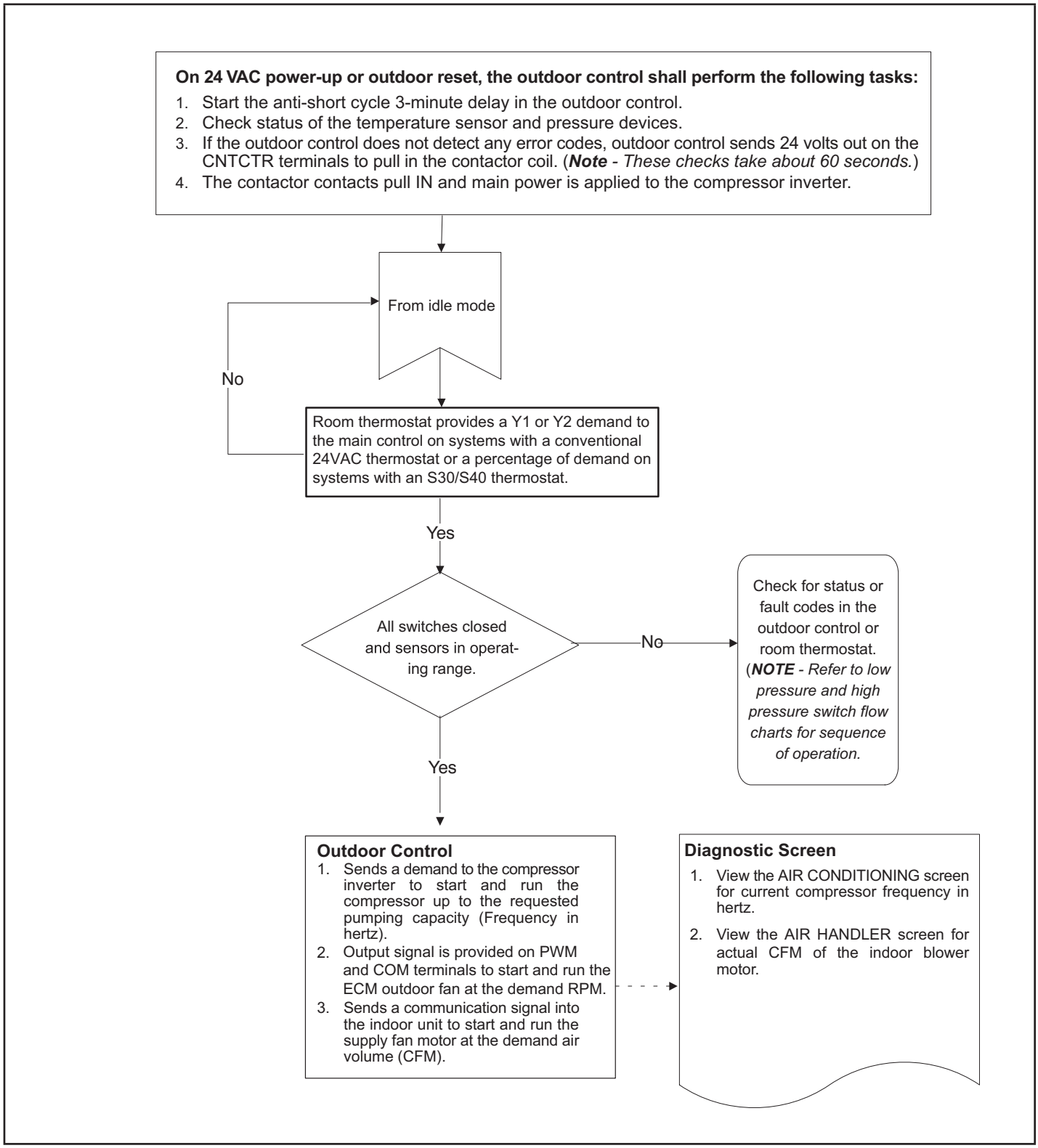

FIGURE 24. 24 Volt Power-Up or Outdoor Reset

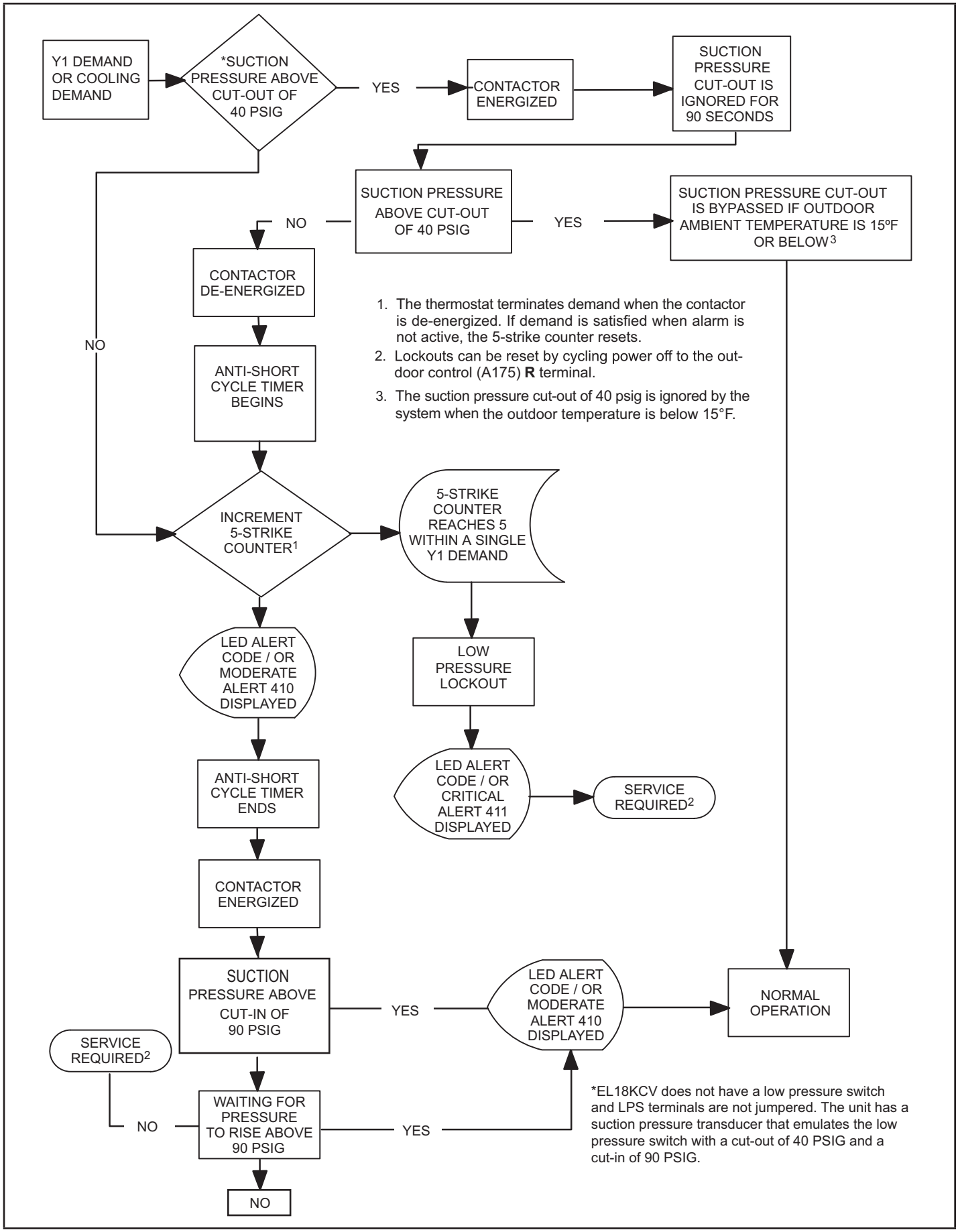

FIGURE 25. Low Pressure Switch Emulated by Suction Pressure Transducer Sequence of Operation (All Units)

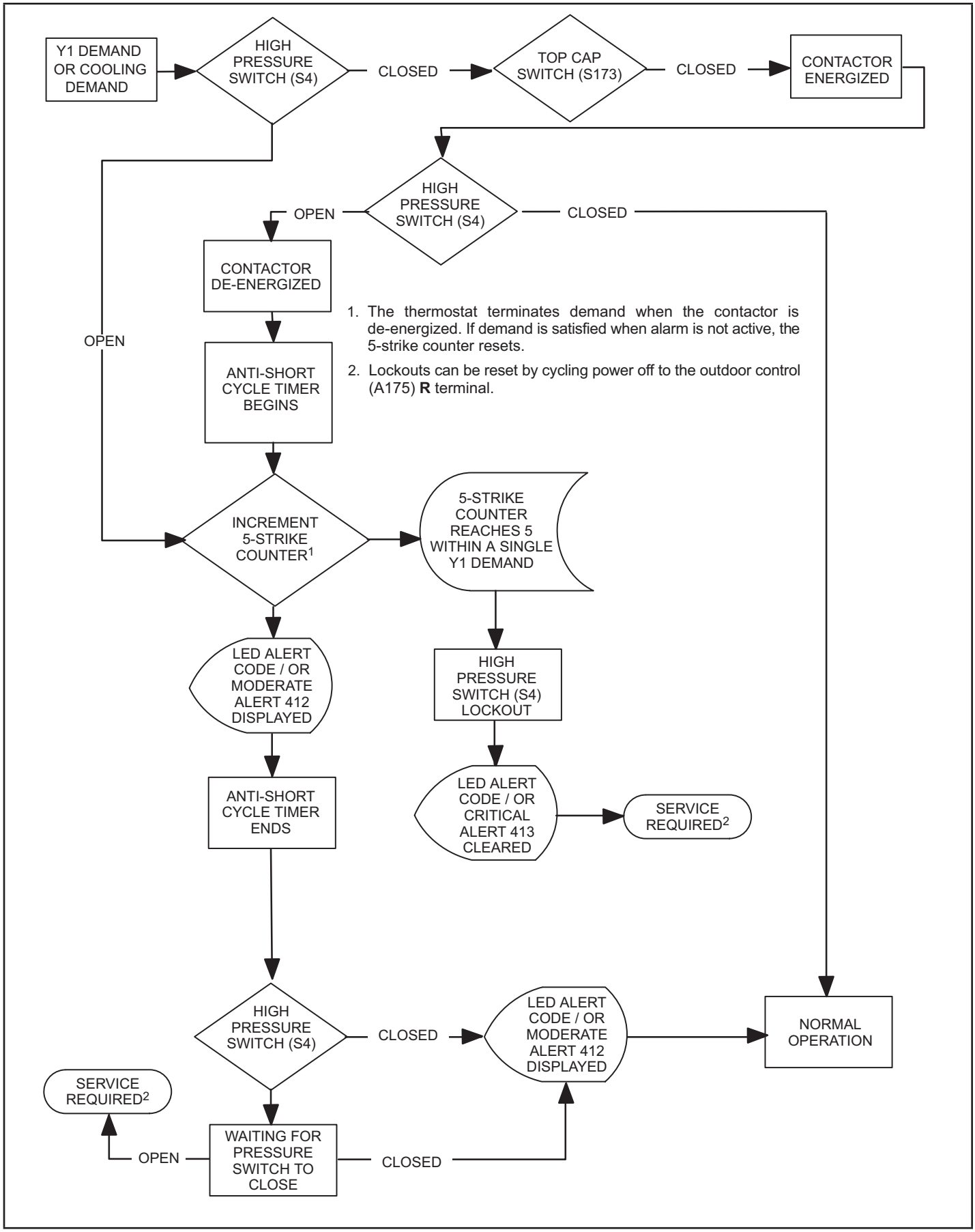

FIGURE 26. High Pressure Switch (S4) Sequence of Operation (All Versions)

Component Testing Table of Contents

Verifying Suction Pressure Transducer Operation.....59
Compressor Operation, Checkout and Status / Error Codes 60
Crankcase Heater, Checkout and Status / Error Codes .64
Compressor Sound Cover 65
Suction Line Filter Drier 65
Top Cap Switch Operation.....66
Reactor Operations 67
Outdoor Fan Operation.....67
Outdoor Control Operation 69
Unit Sensor Operations 72
DC Inverter Control Operation..... 75

Verifying High Pressure Switch and Low Pressure Protection Operation

OPERATION:

The unit's pressure S4 high pressure switch is factory wired into the control on the HPS terminals.

NOTE – The EL18KCV does not have a low pressure switch and LPS terminals are not jumpered. The unit has a suction pressure transducer that emulates the low pressure switch with a cut-out of 40 PSIG and a cut-in of 90 PSIG. This provide the same protection as a tradition low pressure switch. If the event the suction pressure transducer fails, back up protection is provided by the suction temperature sensor and will open at 25F.

Low Suction Pressure Protection – See figure 25 for low suction pressure protection sequence of operation.

High Pressure Switch (HI-PS) – See figure 26 for high pressure switch sequence of operation.

Pressure Switch Event Settings

The following pressures are the auto-reset event value triggers for low and high pressure thresholds:

- High Pressure (auto-reset) - trip at 590 psig; reset at 418.
- Low Suction Pressure Protection (Suction pressure transducer emulates LPS) (auto-reset) – trip at 40 psig; reset at 90.

CHECKOUT – S4 High Pressure Switch

Using a multimeter set to ohms with the terminals disconnected from the control board, check the resistance between the two terminals of the pressure switch. If the resistance reading is 0 ohms, the switch is closed.

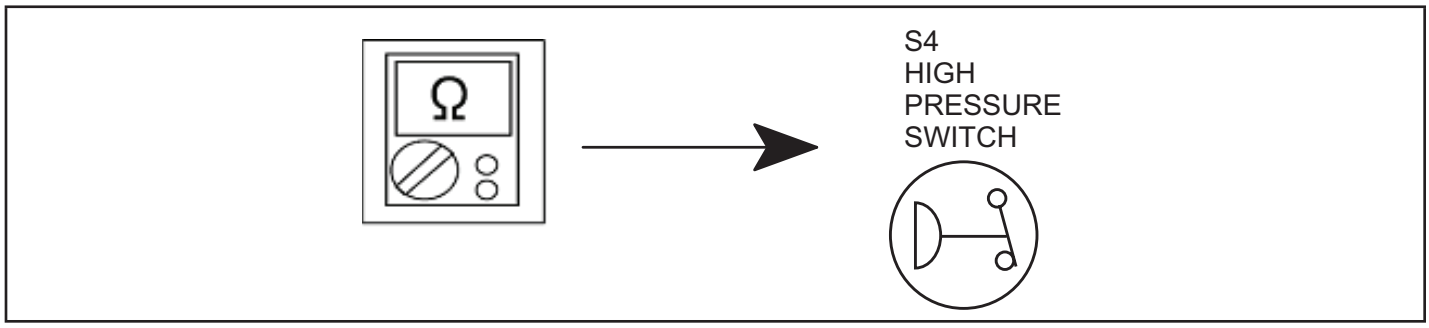

FIGURE 27. Verifying High Pressure Switch Operation

Verifying Suction Pressure Transducer Operation

Using a multimeter set to VDC with the Suction Pressure Transducer connected to the "Suct P" 3-pin connector on the control board. Pin 1 (Red wire +5VDC) to Pin 3 (Black wire - GND) should read 5 VDC continuous. Pin 2 (Blue wire output from transducer) to Pin 3 (Black - GND) should read 0.5 to 4.5 VDC and will vary depending on suction pressure measured. See Table 10.

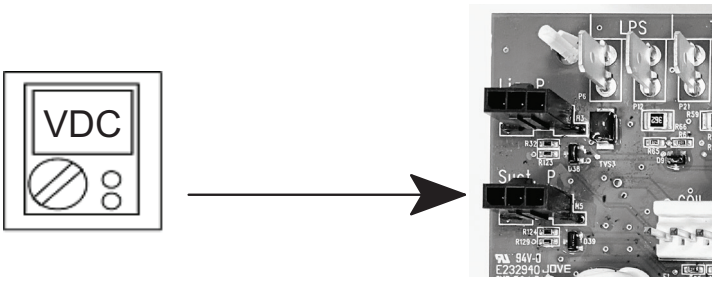

FIGURE 28. Suction Pressure Transducer Voltage

TABLE 10. Suction Pressure Transducer Output Voltage

Suction Pressure (PSIG)	DC Voltage Output (Pin 2 to Pin 3)	Suction Pressure (PSIG)	DC Voltage Output (Pin 2 to Pin 3)
0	0.49	110	2.69
10	0.69	120	2.89
20	0.89	130	3.09
30	1.09	140	3.29
40	1.29	150	3.49
50	1.49	160	3.69
60	1.69	170	3.89
70	1.89	180	4.09
80	2.09	190	4.29
90	2.29	200	4.49
100	2.49	210	4.50

High Pressure Switch and Low Pressure Protection Errors

TABLE 11. Outdoor Control 7-Segment Display Alert Codes

System fault and lockout codes take precedence over system status codes (cooling, heating operating percentages or defrost/dehumidification). Only the latest active fault or lockout codes are displayed (if present). If no fault or lockout codes are active, then system status codes are displayed. Alert codes are also displayed on the communicating thermostat.

Alert Codes	Priority	Alarm Description	Possible Causes and Clearing Alarm
E 410	Moderate	The outdoor unit cycled off due to low pressure switch opening.	Unit pressure is below the lower limit. The system is shutdown. The low pressure switch closes above 90PSIG and opens below 40PSIG. Confirm that the system is properly charged with refrigerant. Check TXV, indoor unit blower motor, dirty filters or clogged refrigerant filter. Confirm that the evaporator coil is clean. The alarm clears after the pressure switch opens or after a power reset.
E 411	Critical	The low pressure switch has opened 5 times within one hour. As a result, the outdoor unit is locked out.	Low pressure switch error count reached 5 strikes. The low pressure switch for R454B opens at 40PSIG and resets at 90PSIG. Confirm that the system is properly charged with refrigerant. Check for clogged TXV, blockage to indoor unit blower motor, dirty filters or clogged refrigerant filter. Confirm that the evaporator coil is clean. The alarm clears after a power reset.
E 412	Moderate	The outdoor unit high pressure switch has opened.	Unit pressure is above the upper limit. System is shut down. The high pressure switch opens at 590PSIG and closes at 418PSIG. Confirm that the system is properly charged with refrigerant. Check for clogged TXV, blockage to indoor unit blower motor, clogged refrigerant filter. Confirm that the outdoor unit is clean. The alarm clears after the pressure switch closes or a power reset. For heating, indoor CFM may be set too low. For zoning system, zone CFM may be set too low.
E 413	Critical	The high pressure switch has opened 5 times within one hour. As a result, the outdoor unit is locked out.	Open high pressure switch error count reached 5 strikes. System is shut down. The high pressure switch for R454B will open at 590PSIG and close at 418PSIG. Confirm that the system is properly charged with refrigerant. Check condenser fan motor, clogged TXV, blockage to indoor unit blower motor, stuck reversing valve or clogged refrigerant filter. Confirm that the outdoor unit is clean. The alarm clears after indoor power reset (24VAC power source to Outdoor Control)

Compressor Operation, Checkout and Status / Error Codes

OPERATION:

All models of the EL18KCV use a 380VAC three phase variable capacity rotary compressor specifically designed for unitary splits system and is approved for use with R454B refrigerant. The compressor, when connected to an inverter, is capable of operating in a running frequency range from 20 hertz up to a maximum of 75 hertz. (maximum hertz is dependent on compressor size). The compressor speed is determined by thermostat demand and suction pressure when installed with a conventional 24VAC non-communicating thermostat and by thermostat demand when installed with an S40 thermostat.

CHECKOUT:

NOTE *- The compressor motor winding resistance is the nominal resistance at 77F. When measuring compressor motor winding resistance, the primary concern is the winding resistance between the different sets of terminals is within 10% of each other. The actual winding resistance is impacted by temperature, refrigerant and oil. Do not automatically condemn a compressor because the measured resistance is slightly higher or lower than the nominal resistance. Check for shorted/open windings and for shorts to ground during testing.*

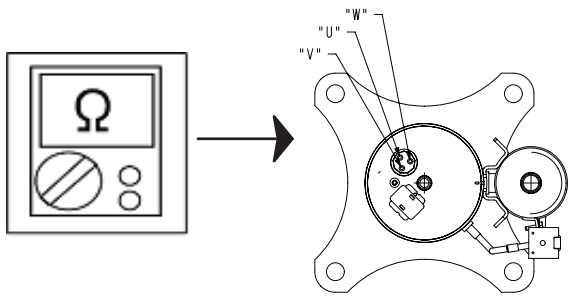

MOTOR WINDING RESISTANCE AT 77° (±7%)

UNIT	U-V/T1-T2	V-W/T2-T3	W-U/T3-T1
EL18KCV-024	0.883Ω	0.883Ω	0.883 Ω
EL18KCV-036	0.883Ω	0.883Ω	0.883Ω
EL18KCV-048	0.705Ω	0.705Ω	0.705Ω
EL18KCV-060	0.705Ω	0.705Ω	0.705Ω

FIGURE 29. Compressor Operation, Checkout and Status/Error Codes

IMPORTANT: If compressor replacement is required, remove the compressor through the top of the unit. Removal through the access panel is not possible.

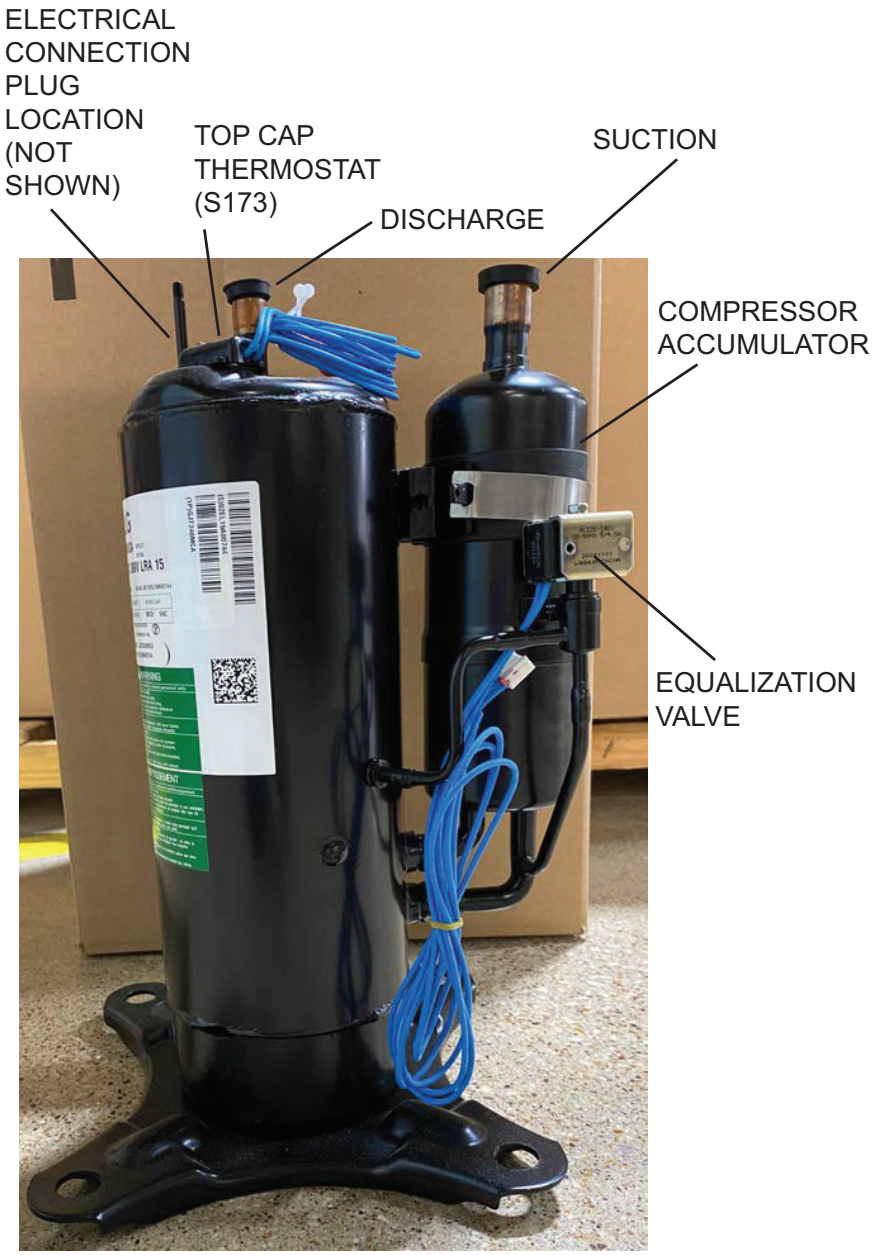

EL18KCV ROTARY COMPRESSOR

FIGURE 30. EL18KCV Rotary Compressor Detail

STATUS CODES:

When the compressor is running, the 7-segment display will show the compressor capacity. When the EL18KCV unit is installed with a Conventional 24VAC non-communicating thermostat the display will show C 1 or C 2. When the EL18KCV unit is installed with an S40 communicating thermostat, the display will show the demand as a precentage. i.e. C 5 0.

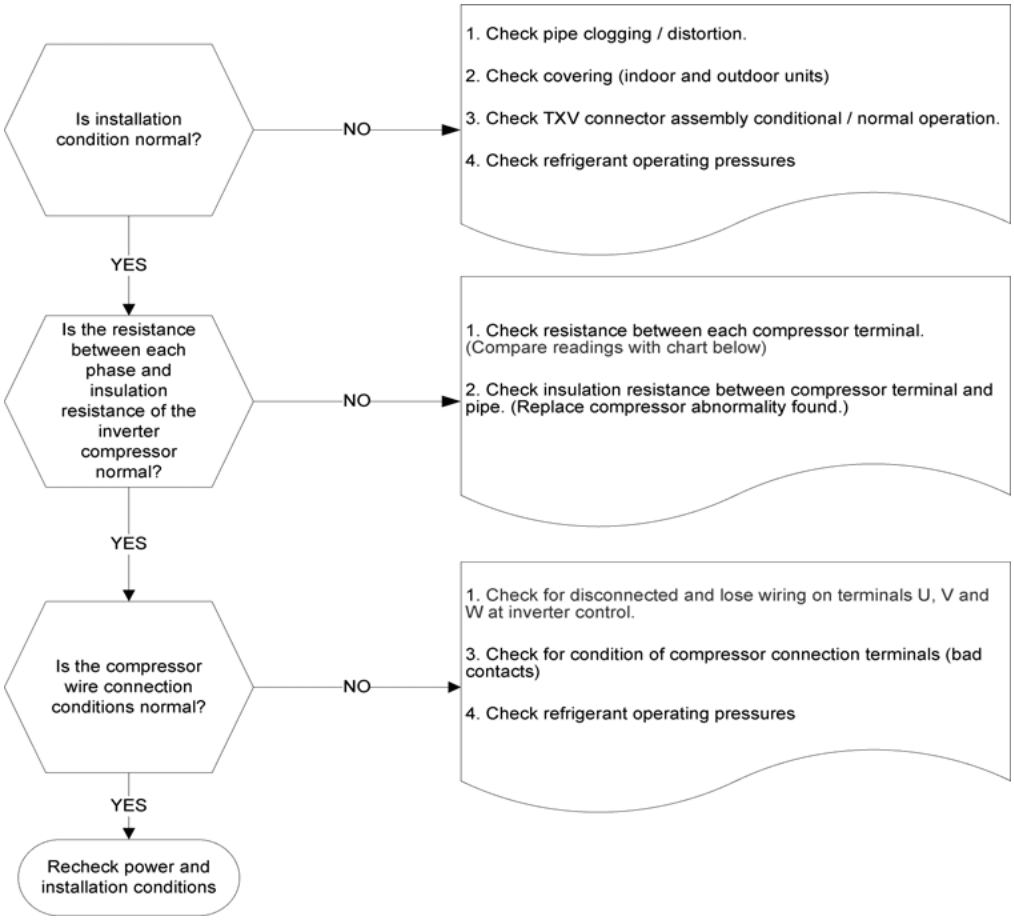

FIGURE 31. Compressor Operation, Checkout and Status/Error Codes

ERROR CODES:

TABLE 12. Outdoor Control 7-Segment Display Alert Codes - Compressor

System fault and lockout codes take precedence over system status codes (cooling, heating operating percentages or defrost/dehumidification). Only the latest active fault or lockout codes are displayed (if present). If no fault or lockout codes are active, then system status codes are displayed. Alert codes are also displayed on the S40 thermostat on systems installed with the S40 thermostat.

Alert Codes	Inverter Code	Inverter LED Flash Code (number of flashes)		Priority	Alarm Description	Possible Causes and Clearing Alarm
		Red LED	Green LED			
E 430	26	2 flashes	6 flashes	Moderate / Critical	Compressor start failure	If condition is detected, outdoor unit compressor and fan stop. Antishort cycle is initiated. If condition occurs 10 times within an hour, system is locked out. Indicates poor connection at compressor harness, improper winding resistance, locked compressor rotor, or flooded compressor. To clear, disconnect power to the indoor unit (24VAC power source to the outdoor control) which will power off the outdoor control and will open the outdoor unit contactor, which interrupts power to the inverter and then re-apply power.

TABLE 12. Outdoor Control 7-Segment Display Alert Codes - Compressor

System fault and lockout codes take precedence over system status codes (cooling, heating operating percentages or defrost/dehumidification). Only the latest active fault or lockout codes are displayed (if present). If no fault or lockout codes are active, then system status codes are displayed. Alert codes are also displayed on the S40 thermostat on systems installed with the S40 thermostat.

Alert Codes	Inverter Code	Inverter LED Flash Code (number of flashes)		Priority	Alarm Description	Possible Causes and Clearing Alarm
		Red LED	Green LED			
E 433	29	2 flashes	9 flashes	Moderate / Critical	The inverter has detected a compressor over-current condition.	Error occurs when compressor peak phase current is greater than 28A. Inverter issues code 14 first and slows down to try to reduce the current. If the current remains high, outdoor unit compressor and fan stop. Antishort cycle is initiated. If condition occurs 5 times within an hour, system is locked out. To clear, disconnect power to the indoor unit (24VAC power source to the outdoor control) which will power off the outdoor control and will open the outdoor unit contactor, which interrupts power to the inverter and then re-apply power.
E 439	12	1 flash	2 flashes	Moderate	Compressor slowdown due to high input current.	Input current is approaching a high limit. Compressor speed automatically slows. The control continues sending the inverter speed demanded by the thermostat. The control sets indoor CFM and outdoor RPM to values according to demand percentage rather than the actual Hz. Alarm is automatically clear.
E 440	13	1 flash	3 flashes	Minor	Heat sink temperature is approaching limit. The compressor speed automatically slows to reduce heat sink temperature. The control sets indoor CFM and outdoor RPM to values according to demand percentage rather than the actual Hz. Alarm is automatically cleared.	This error code is primarily for informational purposes as the inverter controls the compressor speed to operate within design parameters. Typically the inverter will make a minor speed reduction of 4 Hz (approximately a 5-6% speed reduction) for a brief period of time and to reduce the heat sink temperature and will then resume normal operation. This may occur at high outdoor temperatures (above 110ºF) for brief periods of time (3 – 4 minutes) and is normal and expected operation of the inverter controlling the compressor safely within design parameters. The inverter finned aluminum heat sink is located on the back side of the inverter in the condenser air stream. f the alert code 440 occur frequently, especially at lower outdoor temperatures, check the heat sink for debris that may reduce heat transfer or possible obstructions that may impact air flow across the heat sink. The inverter will begin to briefly reduce the compressor speed when the heat sink temperature rises above 185ºF and will allow the inverter to resume the requested compressor demand speed once the inverter heat sink reaches 176ºF. The heat sink temperature, compressor speed in Hertz & the Inverter Compressor Speed Reduction status (“On” or “Off ”) notification can be viewed under the outdoor unit Diagnostics section of the thermostat dealer control center on units installed with an S40 thermostat.
E 441	14	1 flash	4 flashes	Minor	Compressor slowdown due to high compressor current. Compressor current is approaching limit. The compressor speed automatically slows. The control sets indoor CFM and outdoor RPM to values according to demand percentage rather than the actual Hz. Alarm is automatically cleared	This error code is primarily for informational purposes as the inverter controls the compressor to operate within design parameters. Alert code 441 typically occurs at startup as the compressor as the currently increases rapidly during startup. The inverter will reduce the compressor speed by 4 hz and slow the compressor ramp up speed to the requested compressor demand (capacity). This is normal and expected operation of the inverter to control the compressor within design parameters. In most cases the alert code 441 does not require any additional service or diagnostic procedures. E441 may also occur if the system is operating at high pressures.
E 600	N/A	N/A	N/A	Critical	Compressor has been cycled OFF by utility load-shedding function.	Load-shedding function: Provides a method for a local utility company to limit the maximum power level usage of the outdoor unit. The feature is activated by applying 24 volts AC power to the L and C terminals on the outdoor control.

Crankcase Heater, Checkout and Status / Error Codes

OPERATION:

CRANKCASE HEATER (HR1)

Compressors in all units are equipped with a 25 or 40 watt belly-band type crankcase heater. The heater prevents liquid from accumulating in the compressor. The heater is controlled by the crankcase heater thermostat.

CRANKCASE HEATER THERMOSTAT (S40)

Crankcase heater thermostat S40 controls the crankcase heater in all units (see figure 2 for location).

1. When liquid line temperature drops below 50°F the thermostat closes which results in the heater being energized.
2. When liquid line temperature rises above 70°F the thermostat opens which results in the heater being de-energized.

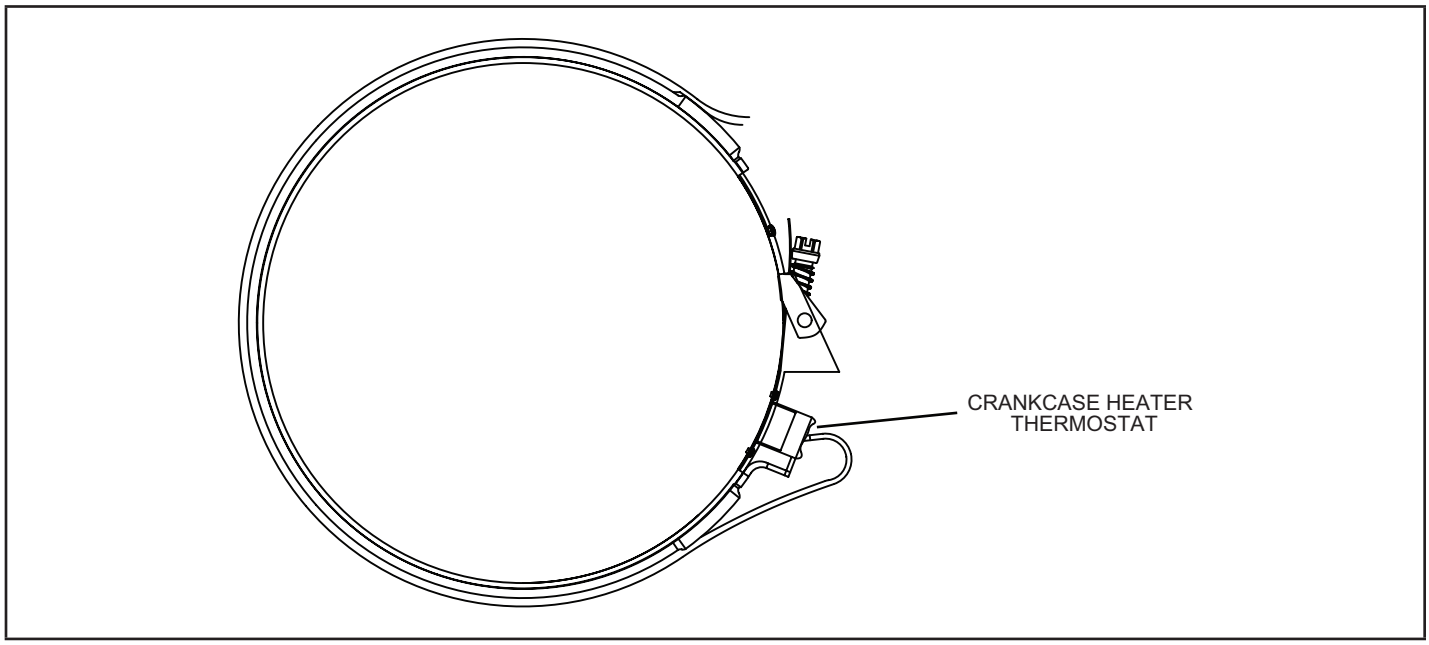

FIGURE 32

CHECKOUT:

Belly-Band Crankcase Heater: Using meter set on ohms, check crankcase heater resistance. If resistance is 0 ohms or infinite, replace the crankcase heater.

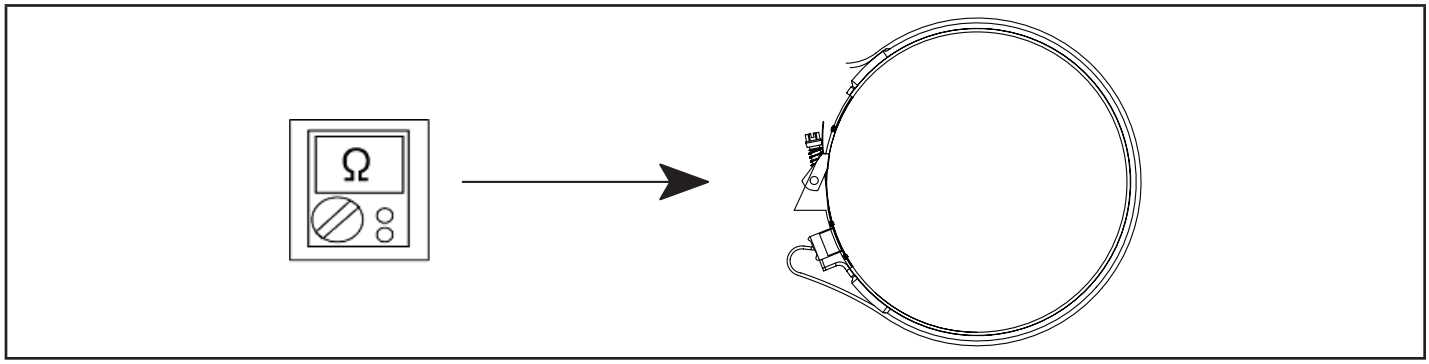

FIGURE 33. Checking Belly-Band Crankcase Heater

Crankcase Heater Thermostat: As the detected temperature changes, the resistance across the sensor changes. Table 17 on page 74 shows how the resistance varies as the temperature changes for this sensor.

NOTE *– When checking the ohms across a sensor, be aware that a sensor showing a resistance value that is not within the range shown in table 15 on page 69, may be performing as designed. However, if a shorted or open circuit is detected, the sensor is faulty; the sensor needs to be replaced.*

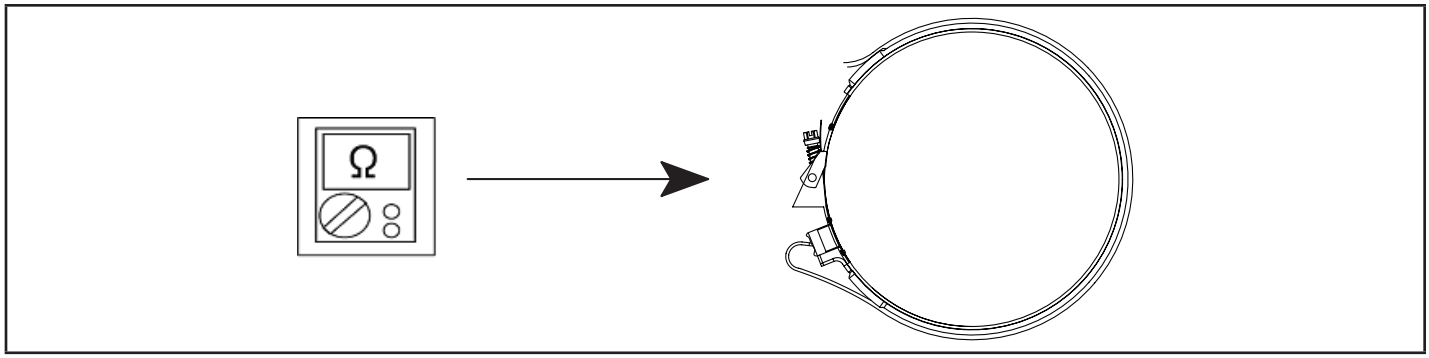

FIGURE 34. Checking Crankcase Heater Thermostat

STATUS CODE:

None

ERROR CODES:

None

Compressor Sound Cover

All units come with a soft-sided polyethylene molded outer shell compressor sound cover. The cover helps reduce any unwanted operating sounds from the compressor. The cover features a hook/loop closure system for ease of installation on the compressor.

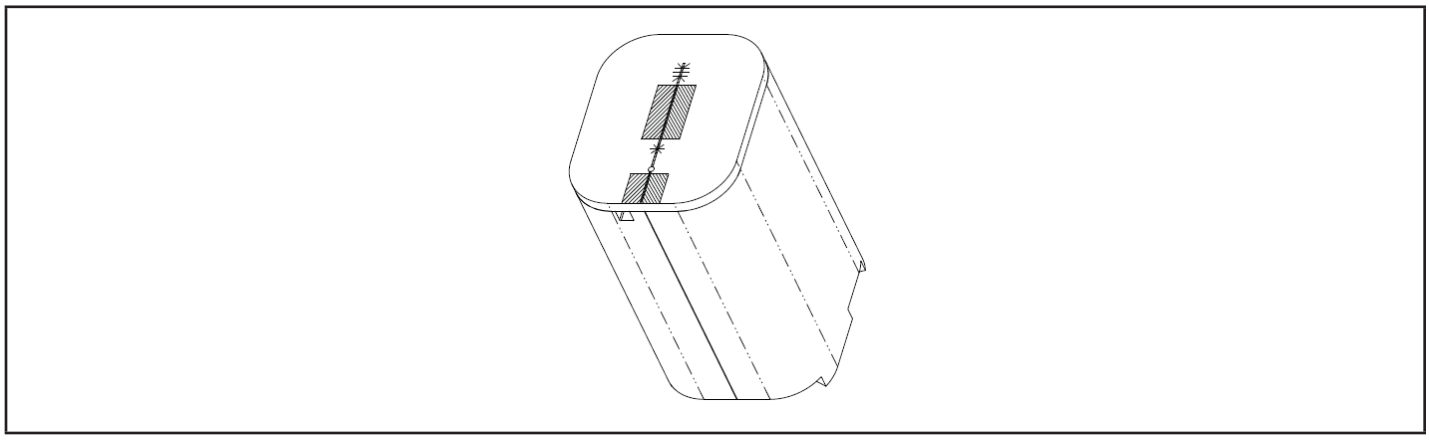

FIGURE 35. Compressor Sound Cover

Suction Line Filter Drier

All models have a rotary compressor and have a factory installed suction line filter drier installed in the suction line. Liquid drier is not required, but may be field installed. The filter drier is designed to remove moisture and foreign matter, which can lead to compressor failure.

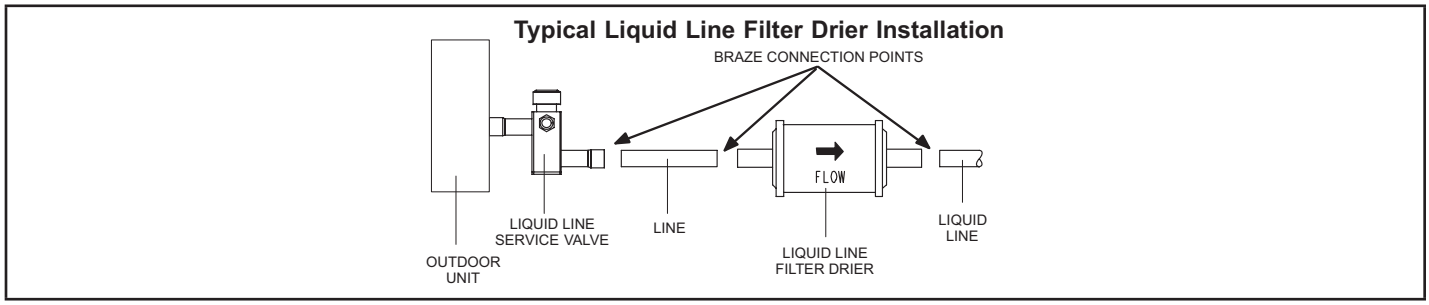

FIGURE 36. Suction line filter drier

Top Cap Switch Operation, Checkout and Status / Error Codes

OPERATION:

Top Cap Thermal Sensor Switch (S173)

Some units are equipped with a compressor-mounted normally closed temperature switch that prevents compressor damage due to overheating caused by internal friction. The switch is located on top of the compressor casing. This switch senses the compressor casing temperature and opens at 221-239°F to shut off compressor operation. The auto-reset switch closes when the compressor casing temperature falls to 140-176°F, and the compressor is re-energized. This is a single-pole, single-throw (SPST) bi-metallic switch.

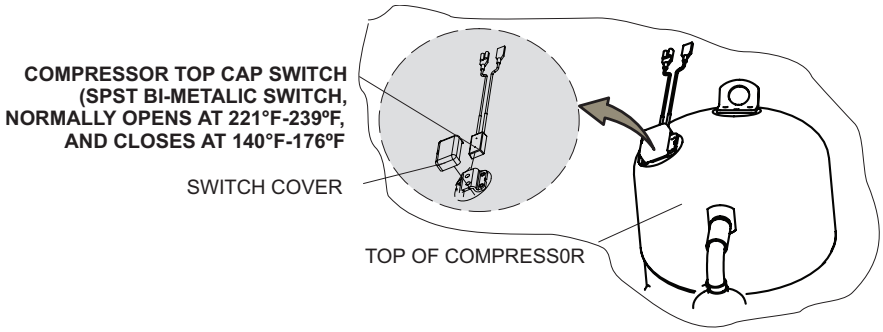

FIGURE 37. Top Cap Thermal Sensor Switch

CHECKOUT:

Using a multimeter set to ohms, with the terminals disconnected from the system, check the resistance between the two terminals of the top cap switch. If the meter display does not change, the switch is open. If the meter display goes to infinite, the switch is closed.

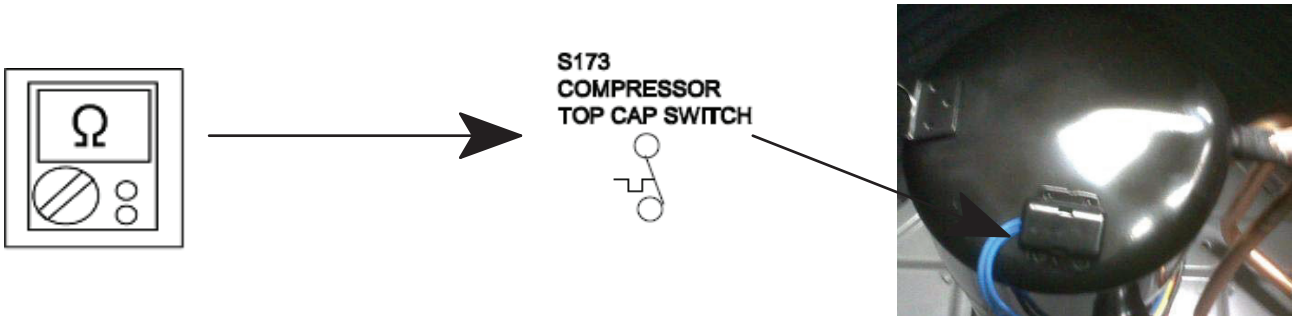

FIGURE 38. Verifying Top Cap Thermal Sensor Switch

STATUS:

None

ERROR:

TABLE 13. Outdoor Control 7-Segment Display Alert Codes - Top Cap Switch

NOTE - System fault and lockout codes take precedence over system status codes (cooling, heating operating percentages or defrost/dehumidification). Only the latest active fault or lockout codes are displayed (if present). If no fault or lockout codes are active, then system status codes are displayed. Alert codes are also displayed on the communicating thermostat.

Alert Codes	Priority	Alarm Description	Possible Causes and Clearing Alarm
E 422	Moderate	Compressor top cap switch exceeding thermal limit.	The top of the compressor is hot. Refrigerant charge may be low, or low mass flow of refrigerant. Check TXV, clogged filter drier, condenser fan motor, indoor blower motor, confirm indoor coil is clean. Check to make sure the blue wires from the top thermostat did not get pulled off one of the TP terminal on the outdoor control board.
E 442	Critical	The top cap switch has opened 5 times within one hour. As a result, the outdoor unit is locked out.	When compressor thermal protection sensor opens 5 times within 1 hour, outdoor stops working. To clear, disconnect power to the indoor unit (24VAC power source to the outdoor control) which will power off the outdoor control and will open the outdoor unit contactor, which interrupts power to the inverter and then re-apply power.

Reactor Operations, Checkout and Status / Error Codes

OPERATION:

Reactor (Inductor or choke) is a passive two-terminal electrical component that stores energy in its magnetic field. Reactors are one of the basic components used in electronics where current and voltage change with time, due to the ability of inductors to delay and reshape alternating currents.

CHECKOUT:

Main Power ON – Voltage IN reactor should be the same as the voltage OUT. With main power OFF and reactor disconnected from system; resistance between leads should be the same

STATUS CODES:

None

ERROR CODES:

None

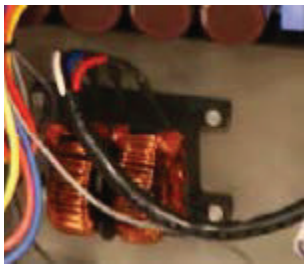

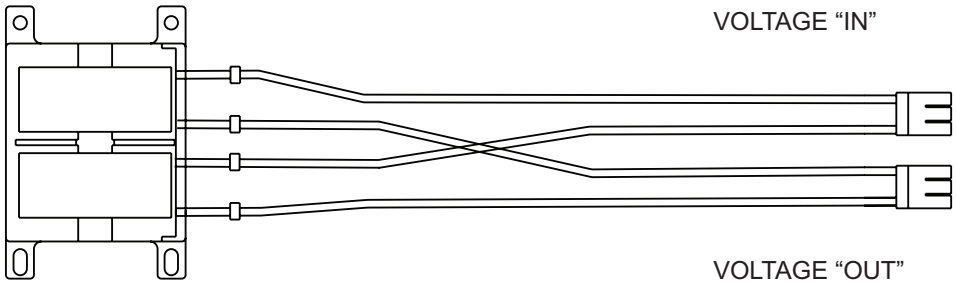

FIGURE 39. EL18KCV Reactor

Outdoor Fan Operation and Checkout

OPERATION:

The EL18KCV-024 and -048 have a single speed PSC outdoor fan motor that is controllled by the outdoor fan contacts located on the outdoor control. The outdoor fan motor will be engergized anytime the compressor is running.

The EL18KCV-036 and -060 units have a variable speed ECM fan motor. The variable speed ECM fan motor is controlled by PWM fan output when the compressor is running and will vary the fan speed to match the compressor capacity.

LOW AMBIENT OPERATION:

The EL18KCV units have factory installed low ambient operator that will control the condenser fan motor based upon liquid line temperature.

The EL18KCV-024 and -048 have a single speed PSC outdoor fan motor and the outdoor control will begin to cycle the outdoor fan motor when the outdoor temperature is below 65°F and the liquid line sensor drops below 58°F and will cycle the fan back on when the liquid temperature rises above 70°F

The EL18KCV-036 and -060 units have a variable speed ECM fan motor. The outdoor control will begin to modulate the outdoor fan motor speed is below 65°F to maintain a liquid line sensor temperature between 58°F and 70°F. If the liquid line sensor drops below 55°F the control will cycle the fan off until liquid temperature rises above 58°F.

CHECKOUT:

VAC Voltage Check

Check for 208/240 VAC power at inverter contactor (red wires) (see figure 44).

Units with PSC Motor:

1. With the unit running, check for 230VAC at the Fan terminal on the outdoor control going to the motor. If no voltage is present check main power at the contactor.
2. Using the push button on the control, enter the "fan test mode" in the "field test mode" by pushing and holding the button until solid "-" appears, release the button. Display will start flashing, within 10 seconds, push and hold the button until the "F" symbol displays then release the button. Display will begin to flash "F", within 10 seconds, push and hold the button until it stops flashing, release the button. Outdoor fan motor will cycle on for 10 minutes. To exit, push and hold the button until three horizontal bars display. Release the button and the outdoor fan will cycle off.

Units with ECM Motor

1. With the unit running, check for 230VAC at the red outdoor fan motor wires at the contactor. If no voltage is present check main power at the contactor.
2. Perform a DC voltage check between the FPWM and Fan C terminal.
3. Using the push button on the control, enter the "fan test mode" in the "field test mode" by pushing and holding the button until solid "-" appears, release the button. Display will start flashing, within 10 seconds, push and hold the button until the "F" symbol displays then release the button. Display will begin to flash "F", within 10 seconds, push and hold the button until it stops flashing, release the button. Outdoor fan motor will cycle on for 10 minutes. To exit, push and hold the button until three horizontal bars display. Release the button and the outdoor fan will cycle off.

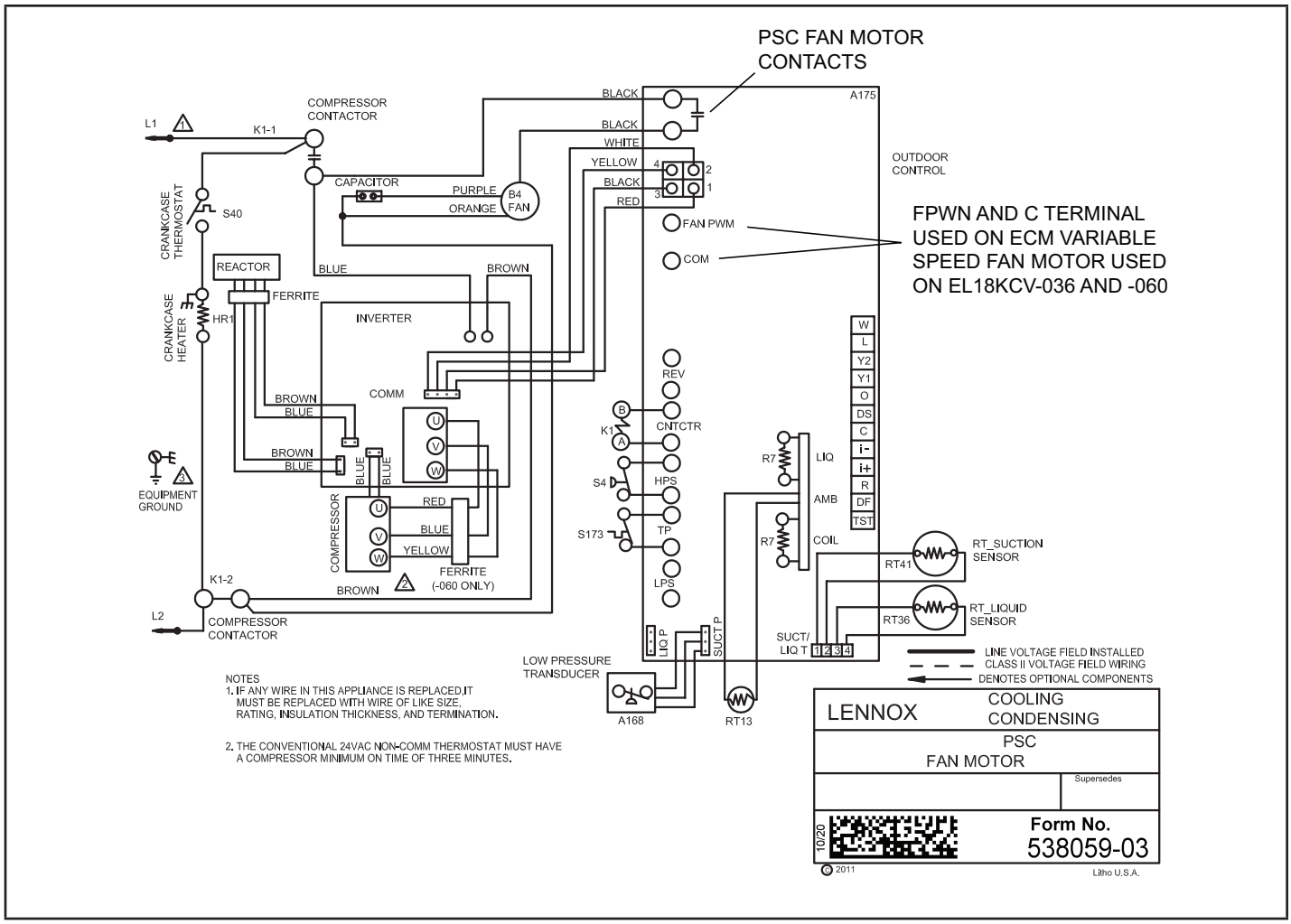

FIGURE 40. VAC Voltage Check

Outdoor Control Operation, Checkout and Status / Error Codes

OPERATION:

The outdoor control is a microprocessor-based device for use with variable-capacity compressors up to 5-tons in capacity operating on 24VAC residential power. The outdoor control integrates the functionality of maintaining compressor speed, and outdoor fan control of PSC and ECM motors. The outdoor control is self-configuring. During start-up the outdoor control selects one of two configurations variable-capacity air conditioner or variable-capacity heat pump.

The EL18KCV outdoor control provides application flexibility. The EL18KCV may be installed with an S40 communicating thermostat in a fully communicating system or with a conventional 24VAC non-communicating single or two stage cooling thermostat.

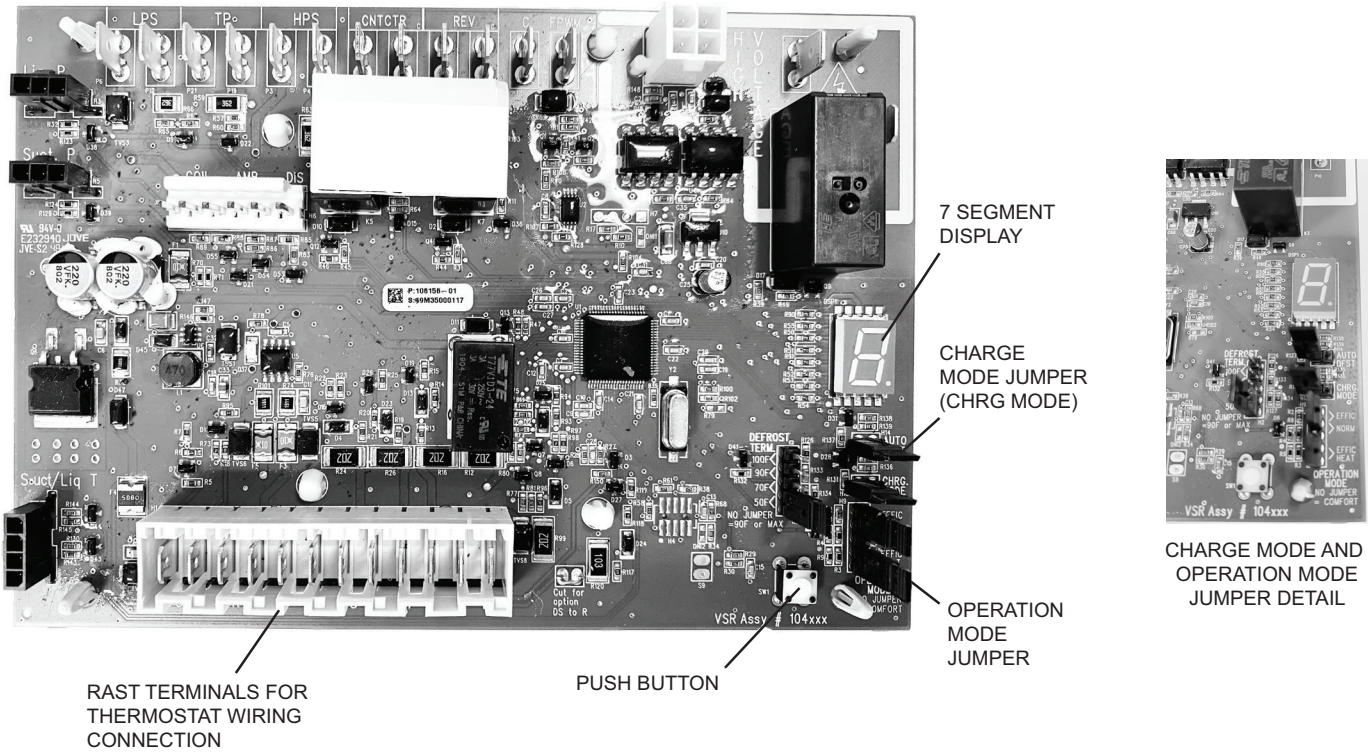

FIGURE 41. Outdoor Control Unit

STATUS CODES:

TABLE 14. Outdoor Control 7-Segment Display Alert Codes - Outdoor Control Status

NOTE - System fault and lockout codes take precedence over system status codes (cooling, heating operating percentages or defrost/dehumidification). Only the latest active fault or lockout codes are displayed (if present). If no fault or lockout codes are active, then system status codes are displayed. Alert codes are also displayed on the S40 thermostat.

Alert Codes	Priority	Alarm Description	Possible Causes and Clearing Alarm
E 600	Critical	Compressor has been cycled OFF on utility load shedding	Load shedding function: Provides a method for a local utility company to limit the maximum power level usage of the outdoor unit. The feature is activated by applying 24 volts AC power to the L and C terminals on the outdoor control.
E 601	Critical	Outdoor unit has been cycled OFF on low temperature protection.	Low temperature Protection: Outdoor unit will not operate when the outdoor temperature is at or below 4° F (20°C). If the unit is operating and the outdoor temperature drops below 4°F (20°C), the unit will continue to operate until the room thermostat is satisfied or the outdoor temperature drops to 15°F (26°C). (Outdoor unit ambient sensor provides temperature readings.)

System Configuration

EL18KCV Thermostat Control Options

The EL18KCV variable capacity units provide two thermostat control options to provide application and installation flexibility.

S40 Communicating Thermostat Control

The E18XPV variable capacity unit may be installed as a fully communicating system consisting of S40 Smart Communicating Thermostat, a communicating indoor unit and the EL18KCV variable capacity outdoor unit wired with (4) communication wires (R, I+, I- and C) connected to the EL18KCV Outdoor Unitary Control.

The EL18KCV variable capacity unit, when wired as a fully communicating system will take full advantage of the advanced diagnostics and control, Wi-Fi accessibility and system operation parameters. Refer to the EL18KCV field wiring diagram for an S40 communicating thermostat.

Conventional 24VAC Non-Communicating Thermostat Control

The EL18KCV variable capacity unit may be installed using a conventional 24VAC non-communicating two stage cooling or single stage cooling thermostat.

NOTE – *The conventional 24VAC non-communicating thermostat must have a compressor minimum on time of three minutes to prevent compressor short cycling. The Lennox M30, ComfortSense 7500, ComfortSense 3000 and many other commercially available electronic thermostats provide this feature.*

The EL18KCV unit will provide full variable capacity operation when installed with a conventional 24VAC non-communicating two stage cooling or single stage cooling thermostat. The EL18KCV outdoor control has advanced control algorithms using the EL18KCV suction pressure sensor to provide true variable capacity operation.

When utilizing a two-stage conventional 24VAC non-communicating cooling thermostat, four wires are required to control the outdoor unit (R, C, Y1 and Y2). Refer to the EL18KCV field wiring diagram for a conventional 24VAC non-communicating 2-stage cooling thermostat.

When utilizing a single-stage conventional 24VAC non-communicating cooling thermostat, three wires are required to control the outdoor unit (R, C and Y1) and Y1 is jumpered to Y2 in the outdoor unit. Note that the published performance data is based upon the use of a two-stage thermostat. Refer to the EL18KCV field wiring diagram for a conventional 24VAC non-communicating single-stage thermostat.

EL18KCV Thermostat Control Options

Thermostat Type	Indoor Unit Type	Qty. of Wires to EL18KCV	EL18KCV Terminal Strip Connections	Unit Operation
S40 Communicating Thermostat	Comunicating Gas Furnace or Air Handler	4	R, I+, I-, C	Fully Communicating Variable Capacity Operation Based Upon Thermostat Demand
Conventional 24VAC 2-Stage Cooling Thermostat (non-communicating)	Any Furnace or Air Handler (non-communicating or communicating)	4	R, C, Y1, Y2	Full Variable Capacity Operation Controlled by EL18KCV Unitary Control Using Suction Pressure
Conventional 24VAC Single-Stage Cooling Thermostat (non-communicating)	Any Furnace or Air Handler (non-communicating or communicating)	3	R, C, Y1 (Jumper Y1 to Y2)	Full Variable Capacity Operation Controlled by EL18KCV Unitary Control Using Suction Pressure

Operation Mode Jumper

The Operation Mode Jumper is only used on applications installed with a conventional 24VAC Non-communicating thermostat. In applications with a conventional 24VAC non-communicating thermostat, the compressor capacity is controlled to maintain the target suction pressure setpoint. The Operation Mode Jumper has three selectable cooling modes. The three modes are Efficiency (Jumper installed on Pins 1 & 2), Normal Mode (Jumper installed on Pins 2 & 3) and Comfort Mode (Jumper Removed). The factory default position is the Efficiency Mode. The Efficiency mode has a variable suction pressure setpoint that will vary with the outdoor temperature; as the outdoor temperature increases the suction pressure setpoint will decrease. When the Operation Mode jumper is installed in the “Normal Mode” the suction pressure setpoint is 135 psig.

Operation Mode Jumper (Conventional 24VAV Thermostats Only)

Operation Mode Jumper	Jumper Position	Target Suction Pressure Setting
Efficiency (default)	Pin 1 to Pin 2	Variable based on OAT
Normal	Pin 2 to Pin 3	135 PSIG
Comfort	Jumper Off	125 PSIG

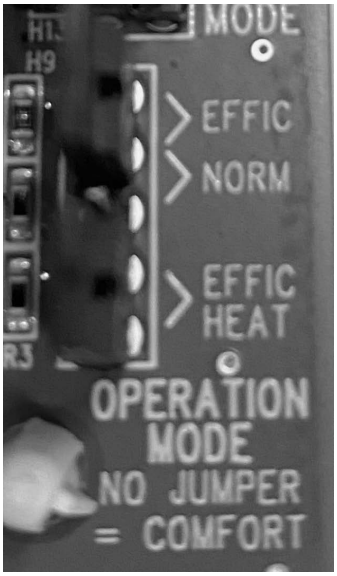

FIGURE 42. Operation Mode Jumper

Unit Operation

EL18KCV Unit Operation with a S40 Communicating Thermostat

When the EL18KCV unit is installed with a S40 Communicating Thermostat and communicating indoor unit, the unit capacity will be controlled in the variable capacity mode throughout the range of capacity from minimum capacity to maximum capacity based upon thermostat demand. The indoor air volume will be controlled to match cooling capacity throughout the capacity range.

EL18KCV Unit Operation with a Conventional 24VAC Non-Communicating 2-Stage Thermostat

When the EL18KCV unit is installed with a conventional 24VAC non-communicating 2-stage thermostat, a Y1 first stage heating or cooling demand will initiate heating or cooling operation and first stage indoor blower operation. The compressor will be controlled in the variable capacity mode by varying the compressor capacity to obtain the target suction pressure set point. The Y2 second stage heating or cooling demand will initiate second stage blower operation. Increased air volume will increase the load on the indoor coil and increase the suction pressure. The EL18KCV compressor capacity will continue to be controlled based upon the suction pressure. The unit capacity will be controlled in the variable capacity mode throughout the range of capacity from minimum capacity to maximum capacity. If the Y2 demand remains after 20 minutes, the EL18KCV control will begin to ramp up the compressor capacity until maximum capacity is achieved. The EL18KCV unit will cycle off once the thermostat demand is satisfied.

EL18KCV Unit Operation with a Conventional 24VAC Non-Communicating Single-Stage Thermostat

When the EL18KCV unit is installed with a conventional 24VAC non-communicating single-stage thermostat, a Y1 first stage heating or cooling demand will initiate heating or cooling operation and heating or cooling indoor blower operation. In single stage thermostat applications, a jumper must be installed between Y1 and Y2 on the EL18KCV outdoor control. The compressor will be controlled in the variable capacity mode by varying the compressor capacity to obtain the target suction pressure set point. If the heating or cooling demand remains after 20 minutes, the EL18KCV control will begin to ramp up the compressor capacity until maximum capacity is achieved. The EL18KCV unit will cycle off once the thermostat demand is satisfied.

ERROR CODES:

TABLE 15. Outdoor Control 7-Segment Display Alert Codes - Outdoor Control Errors

NOTE - System fault and lockout codes take precedence over system status codes (cooling, heating operating percentages or defrost/dehumidification). Only the latest active fault or lockout codes are displayed (if present). If no fault or lockout codes are active, then system status codes are displayed. Alert codes are also displayed on the S40 thermostat.

Alert Codes	Priority	Alarm Description	Possible Causes and Clearing Alarm
E 105	Moderate	The outdoor control has lost communication with either the thermostat or indoor unit.	Equipment is unable to communicate. Indicates numerous message errors. In most cases errors are related to electrical noise. Make sure high voltage power is separated from RSBus. Check for miswired and/or loose connections between the stat, indoor unit and outdoor unit. Check for a high voltage source of noise close to the system. Fault clears after communication is restored.
E 120	Moderate	There is a delay in the outdoor unit responding to the system.	Typically, this alarm/code does not cause any issues and will clear on its own. The alarm / code is usually caused by a delay in the outdoor unit responding to the thermostat. Check all wiring connections. Cleared after unresponsive device responds to any inquiry.
E 124	Critical	The S40 thermostat has lost communication with the outdoor unit for more than 3 minutes.	Equipment lost communication with the thermostat. Check the wiring connections, ohm wires and cycle power. The alarm stops all associated HVAC operations and waits for a heartbeat message from the unit that's not communicating. The alarm / fault clears after communication is re-established.
E 125	Critical	There is a hardware problem with the outdoor control.	There is a control hardware problem. Replace the outdoor control if the problem prevents operation and is persistent. The alarm / fault is cleared 300 seconds after the fault recovers
E 131	Critical	The outdoor unit control parameters are corrupted	Reconfigure the system. Replace the control if heating or cooling is not available.
E 132	Critical	Internal software error	Replace outdoor control.

Unit Sensor Operation, Checkout and Status /Error Codes

OPERATION:

6-Pin Sensor Harness (DIS, AMB, COIL)

Discharge Sensor (R7 - No Sensor)

There is no sensor located on positions 5 and 6 of the connector. A 10K Ohm resistor installed between pins 5 and 6 on the cable harness provides continuity for this circuit.

Ambient Temperature Sensor (RT13)

Ambient temperatures, as read by the ambient temperature sensor connected to pin 3 and pin 4, which are below -35°F (-37°C) or above 120°F (48°C) trigger a fault condition. If the ambient sensor is open, shorted, or out of the temperature range of the sensor, the control displays the appropriate alert code. Heating and cooling operation is allowed in this fault condition

Coil Temperature Sensor (R7 - No Sensor)

There is no sensor located on position 1 to position 2 of the connector. A 10K ohm resistor is installed between pins 1 and 2 on the cable harness and provides continuity for this circuit.

4-Pin Suction Temperature Sensor / Liquid Temperature Sensor Harness

Suction Line Sensor (RT41)

Suction line temperature is read by the suction line temperature sensor between Pins 1 and Pin 2 of the 4-pin sensor harness. Nominal Resistance of the sensor is 10K ohms at 77F. The control will display an E182 error code if the sensor reads open or shorted for 24 hours. Cooling operation is allowed with this fault.

Liquid Line Temperature Sensor (RT36)

Liquid line temperature is read by the liquid line temperature sensor between Pins 3 and Pin 4 of the 4-pin sensor harness. Nominal Resistance of the sensor is 10K ohms at 77F. The control will display are E184 error code if the sensor reads open or shorted for 24 hours. Cooling operation is allowed with this fault.

SENSOR	TEMP RANGE ºF (ºC)	RESISTANCE VALUES RANGE (OHMS)	PIN# / WIRE SLEEVE COLOR
NONE	N/A	10K Ohms Nominal	6 AND 5
OUTDOOR AMBIENT	-40 (-40) TO 140 (60)	336,000 to 2,487 (see table 16 on page 74 for exact temperature to ohm readings)	4 AND 3 (**BLACK**)
NONE	N/A	N/A	2 AND 1

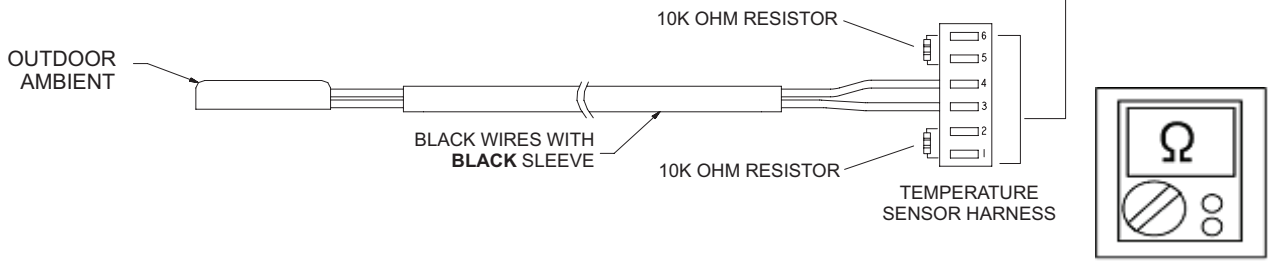

FIGURE 43. Temperature Sensor Specification

CHECKOUT:

Sensors connect to the outdoor control through a field-replaceable harness assembly that plugs into the outdoor control. Through the sensors, the control detects outdoor ambient, coil and liquid temperature fault conditions. As the detected temperature changes, the resistance across the sensor changes. Check sensor operation by reading ohms across pins shown in figure 49.

NOTE *– When checking the ohms across a sensor, be aware that a sensor showing a resistance value that is not within the range shown in figure 49, may be performing as designed. However, if a shorted or open circuit is detected, then the sensor may be faulty and the sensor harness will need to be replaced.*

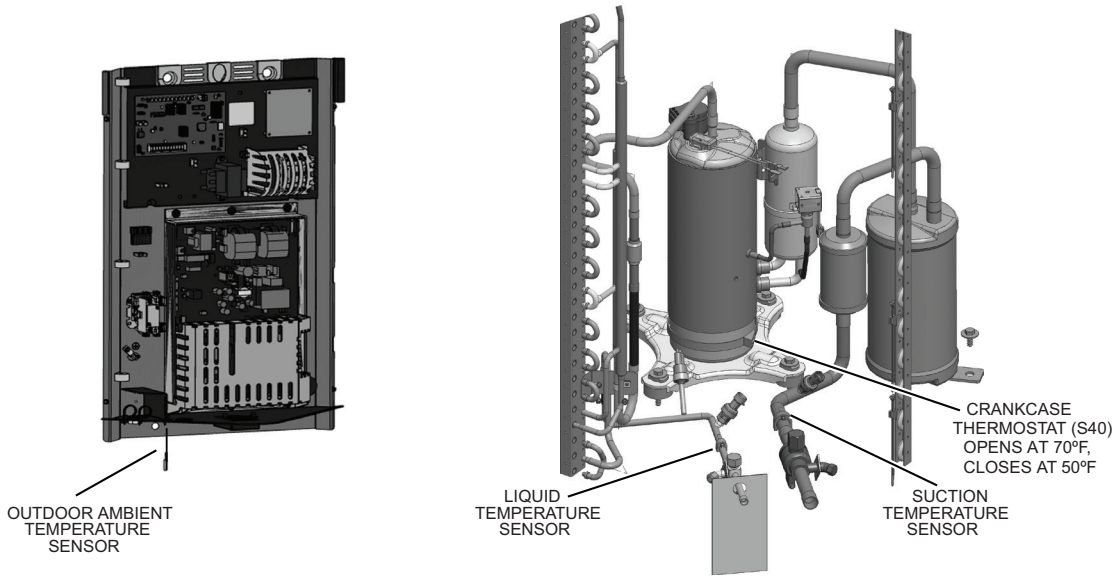

FIGURE 44. Temperature Sensor Locations

TABLE 16. Ambient and Liquid Line Sensors Temperature / Resistance Range

F°	Resistance	F°	Resistance	F°	Resistance	F°	Resistance
136.3	2680	56.8	16657	21.6	44154	-11.3	123152
133.1	2859	56.0	16973	21.0	44851	-11.9	125787
130.1	3040	55.3	17293	20.5	45560	-12.6	128508
127.3	3223	54.6	17616	20.0	46281	-13.2	131320
124.7	3407	53.9	17942	19.4	47014	-13.9	134227
122.1	3592	53.2	18273	18.9	47759	-14.5	137234
119.7	3779	52.5	18607	18.4	48517	-15.2	140347
117.5	3968	51.9	18945	17.8	49289	-15.9	143571
115.3	4159	51.2	19287	17.3	50074	-16.5	146913
113.2	4351	50.5	19633	16.8	50873	-17.2	150378
111.2	4544	49.9	19982	16.3	51686	-17.9	153974
109.3	4740	49.2	20336	15.7	52514	-18.6	157708
107.4	4937	48.5	20695	15.2	53356	-19.3	161588
105.6	5136	47.9	21057	14.7	54215	-20.1	165624
103.9	5336	47.3	21424	14.1	55089	-20.8	169824
102.3	5539	46.6	21795	13.6	55979	-21.5	174200
100.6	5743	46.0	22171	13.1	56887	-22.3	178762
99.1	5949	45.4	22551	12.5	57811	-23.0	183522
97.6	6157	44.7	22936	12.0	58754	-23.8	188493
96.1	6367	44.1	23326	11.5	59715	-24.6	193691
94.7	6578	43.5	23720	11.0	60694	-25.4	199130
93.3	6792	42.9	24120	10.4	61693	-26.2	204829
92.0	7007	42.3	24525	9.9	62712	-27.0	210805
90.6	7225	41.7	24934	9.3	63752	-27.8	217080
89.4	7444	41.1	25349	8.8	64812	-28.7	223677
88.1	7666	40.5	25769	8.3	65895	-29.5	230621
86.9	7890	39.9	26195	7.7	67000	-30.4	237941
85.7	8115	39.3	26626	7.2	68128	-31.3	245667
84.5	8343	38.7	27063	6.7	69281	-32.2	253834
83.4	8573	38.1	27505	6.1	70458	-33.2	262482
82.3	8806	37.5	27954	5.6	71661	-34.1	271655
81.2	9040	37.0	28408	5.0	72890	-35.1	281400
80.1	9277	36.4	28868	4.5	74147	-36.1	291774
79.0	9516	35.8	29335	3.9	75431	-37.1	302840
78.0	9757	35.2	29808	3.4	76745	-38.2	314669
77.0	10001	34.7	30288	2.8	78090	-39.2	327343
76.0	10247	34.1	30774	2.3	79465	- - -	- - -
75.0	10496	33.5	31267	1.7	80873	- - -	- - -
74.1	10747	33.0	31766	1.2	82314	- - -	- - -
73.1	11000	32.4	32273	0.6	83790	- - -	- - -
72.2	11256	31.9	32787	0.0	85302	- - -	- - -
71.3	11515	31.3	33309	-0.5	86852	- - -	- - -
70.4	11776	30.7	33837	-1.1	88440	- - -	- - -
69.5	12040	30.2	34374	-1.7	90068	- - -	- - -
68.6	12306	29.6	34918	-2.2	91738	- - -	- - -
67.7	12575	29.1	35471	-2.8	93452	- - -	- - -
66.9	12847	28.6	36031	-3.4	95211	- - -	- - -
66.0	13122	28.0	36600	-4.0	97016	- - -	- - -
65.2	13400	27.5	37177	-4.6	98870	- - -	- - -
64.4	13681	26.9	37764	-5.2	100775	- - -	- - -
63.6	13964	26.4	38359	-5.7	102733	- - -	- - -
62.8	14251	25.8	38963	-6.3	104746	- - -	- - -
62.0	14540	25.3	39577	-6.9	106817	- - -	- - -
61.2	14833	24.8	40200	-7.5	108948	- - -	- - -
60.5	15129	24.2	40833	-8.2	111141	- - -	- - -
59.7	15428	23.7	41476	-8.8	113400	- - -	- - -
59.0	15730	23.2	42130	-9.4	115727	- - -	- - -
58.2	16036	22.6	42794	-10.0	118126	- - -	- - -
57.5	16345	22.1	43468	-10.6	120600	- - -	- - -

ERROR CODES:

TABLE 17. Outdoor Control 7-Segment Display Alert Codes – Outdoor Control Errors

NOTE - System fault and lockout codes take precedence over system status codes (cooling, heating operating percentages or defrost/dehumidification). Only the latest active fault or lockout codes are displayed (if present). If no fault or lockout codes are active, then system status codes are displayed. Alert codes are also displayed on the S40 thermostat.

Alert Codes	Priority	Alarm Description	Possible Causes and Clearing Alarm
E 180	Moderate / Critical	The S40 thermostat has found a problem with the outdoor unit's ambient temperature sensor.	During normal operation, after the outdoor control recognizes sensors, the alarm will be sent only if valid temperature reading is lost. Compare outdoor sensor resistance to temperature/resistance charts in unit installation instructions. Replace sensor pack if necessary. At the beginning of (any) configuration, furnace or air-handler control will detect the presence of the sensor(s). If detected (reading in range), appropriate feature will be set as 'installed' and shown in the S40 thermostat 'About' screen. The alarm / fault will clear upon configuration, or sensing normal values.
E 182	Moderate	Suction Temperature Sensor has malfunctioned	Sensor is open or shorted. Replace the Sensor
E 424	Moderate	Faulty outdoor liquid line sensor	Sensor is open or shorted. Replace the sensor.

DC Inverter Control Operation, Checkout, Status / Error Codes

OPERATION OF COMPONENTS:

Electromagnetic compatibility circuit (EMC): EMC ensures the correct operation of different equipment items which use or respond to electromagnetic phenomena. It also helps to negate the effects of interference.

CONVERTER:

Converts AC (alternating current) to DC (direct current).

POWER FACTOR CORRECTION (PFC) CIRCUIT:

The PFC module is an integrated part of the outdoor inverter that monitors the DC bus for high, low and abnormal voltage conditions. If any of these conditions are detected, the PFC function and compressor will stop.

INTELLIGENT (INVERTER) POWER MODULE (IPM):

The IPM converts DC power into AC power. The control method is known as pulse width modulation (PWM). This means the DC is switched on and off very quickly (chopped) by the transistor switches to make simulated AC at required frequency and voltage.

COMMUNICATION CONTROL CIRCUIT:

Receives and sends message between the inverter and the outdoor control.

STATUS CODES:

TABLE 18. Outdoor Control 7-Segment Display Alert Codes and Inverter LED Flash Codes

NOTE - System fault and lockout codes take precedence over system status codes (cooling, heating operating percentages or defrost/dehumidification). Only the latest active fault or lockout codes are displayed (if present). If no fault or lockout codes are active, then system status codes are displayed. Alert codes are also displayed on the S40 thermostat.

Alert Codes	Inverter LED Flash Code (number of flashes)		Prority	Alarm Description	Possible Causes and Clearing Alarm
	Red LED	Green LED			
N/A	ON	OFF	N/A	EL18KCV-024, -036 only: Indicates inverter is operating normally.	
N/A	ON	ON	N/A	EL18KCV-048, -060 only: Indicates inverter is operating normally.	
N/A	OFF	OFF	N/A	Indicates inverter is NOT energized.	

ERROR CODES:

TABLE 19. Outdoor Control 7-Segment Display Alert Codes and Inverter LED Flash Codes

NOTE - System fault and lockout codes take precedence over system status codes (cooling, heating operating percentages or defrost/dehumidification). Only the latest active fault or lockout codes are displayed (if present). If no fault or lockout codes are active, then system status codes are displayed. Alert codes are also displayed on the S40 thermostat.

Alert Codes	Inverter Code	Inverter LED Flash Code (number of flashes)		Priority	Alarm Description	Possible Causes and Clearing Alarm
		Red LED	Green LED			
E 423	40	4 flashes	OFF	Moderate / Critical	The inverter has detected a circuit problem.	Control will lock out after 10 strikes within an hour. To clear, disconnect power to the indoor unit (24VAC power source to the outdoor control) which will power off the outdoor control and will open the outdoor unit contactor, which interrupts power to the inverter and then re-apply power.
E 426	N/A	N/A	N/A	Critical	Excessive inverter alarms	After ten faults within one hour, control will lock out. Indicates poor system operation. Review history of alarms to resolve system setup. Check condenser fan motor, TXV, indoor unit blower motor, stuck reversing valve, overcharge, undercharge, and clogged refrigerant filter. To clear, disconnect power to the indoor unit (24VAC power source to the outdoor control) which will power off the outdoor control and will open the outdoor unit contactor, which interrupts power to the inverter and then re-apply power. Inverter alarms 12 to 14 and 53 do not count towards this lock out condition.
E 427	21	2 flashes	1 flash	Moderate / Critical	The inverter has detected a DC peak fault condition.	If condition (55A or higher) is detected, outdoor unit will stop (compressor and fan). Antishort cycle is initiated. If peak current (55A or higher) occurs 10 times within an hour, system will lock out. Indicates high pressure, condenser fan failure, locked compressor rotor or overcharge. To clear, disconnect power to the indoor unit (24VAC power source to the outdoor control) which will power off the outdoor control and will open the outdoor unit contactor, which interrupts power to the inverter and then re-apply power.
E 428	22	2 flashes	2 flashes	Moderate / Critical	The inverter has detected a high main input current condition	If condition is detected, outdoor unit will stop (compressor and fan). Antishort cycle is initiated. If condition occurs 5 times within an hour, system will lock out. Indicates high pressure, condenser fan failure or overcharge. To clear, disconnect power to the indoor unit (24VAC power source to the outdoor control) which will power off the outdoor control and will open the outdoor unit contactor, which interrupts power to the inverter and then re-apply power.
E 429	23	2 flashes	3 flashes	Moderate / Critical	On a call for compressor operation, if DC link power in inverter does not rise above 180 VDC for 2 and 3 ton models, 250 VDC for 4 and 5 ton models, within 30 seconds, the control will display a moderate code. If condition is detected, outdoor unit will stop (Compressor and fan). Antishort cycles is initiated. If condition occurs 10 times within a 60 minute rolling time period, system will lock out and display a critical code.	**Issues**: (1) If DC link power in inverter does not rise above 180 VDC for 2- and 3-ton models, 250 VDC for 4- and 5-ton models, within 30 seconds, the outdoor control will display a moderate code. (2) Capacitors on inverter do not properly charge. **Corrective Actions:** (1) Check for proper main power to outdoor unit and for any loose electrical connections.

TABLE 19. Outdoor Control 7-Segment Display Alert Codes and Inverter LED Flash Codes

NOTE - System fault and lockout codes take precedence over system status codes (cooling, heating operating percentages or defrost/dehumidification). Only the latest active fault or lockout codes are displayed (if present). If no fault or lockout codes are active, then system status codes are displayed. Alert codes are also displayed on the S40 thermostat.

Alert Codes	Inverter Code	Inverter LED Flash Code (number of flashes)		Priority	Alarm Description	Possible Causes and Clearing Alarm
		Red LED	Green LED			
E 430	26	2 flashes	6 flashes	Moderate / Critical	Compressor start failure.	If condition is detected, outdoor unit will stop (compressor and fan). Antishort cycle is initiated. If condition occurs 10 times within an hour, system will lock out. Indicates poor connection at compressor harness, improper winding resistance, locked compressor rotor, or flooded compressor. To clear, disconnect power to the indoor unit (24VAC power source to the outdoor control) which will power off the outdoor control and will open the outdoor unit contactor, which interrupts power to the inverter and then re-apply power.
E 431	27	2 flashes	7 flashes	Moderate / Critical	Error occurs when PFC detects an over-current condition of 100A, the control will display a moderate code. If condition is detected, outdoor unit will stop (Compressor and fan). Anti-short cycle is initiated. Inverter is unavailable to communicate with the outdoor control for 3 minutes. If condition occurs 10 times within a 60 minute rolling time period, system will lock out and display a critical code.	**Issues**: (1) Indicates power interruption, brownout, poor electrical connection or loose inverter input wire. (2) System testing was set up and code was generated when the reversing valve is de-energized coming out of defrost (code appears with or without 30 compressor delay). **Corrective Actions:** (1) Check for proper main power to outdoor unit and for any loose electrical connections.
E 432	28	2 flashes	8 flashes	Moderate / Critical	The inverter has detected a DC link high voltage condition.	Error occurs when the DC link capacitor voltage is greater than 480VDC. If condition is detected, outdoor unit will stop (compressor and fan). Antishort cycle is initiated. If condition occurs 10 times within an hour, system will lock out. System will stop. To clear, disconnect power to the indoor unit (24VAC power source to the outdoor control) which will power off the outdoor control and will open the outdoor unit contactor, which interrupts power to the inverter and then re-apply power.
E 433	29	2 flashes	9 flashes	Moderate / Critical	The inverter has detected a compressor over-current condition	Error occurs when compressor peak phase current is greater than 28A. Inverter will issue code 14 first and slow down to try to reduce the current. If the current remains high, outdoor unit will stop (compressor and fan). Antishort cycle is initiated. If condition occurs 5 times within an hour, system will lock out. To clear, disconnect power to the indoor unit (24VAC power source to the outdoor control) which will power off the outdoor control and will open the outdoor unit contactor, which interrupts power to the inverter and then re-apply power.

TABLE 19. Outdoor Control 7-Segment Display Alert Codes and Inverter LED Flash Codes

NOTE - System fault and lockout codes take precedence over system status codes (cooling, heating operating percentages or defrost/dehumidification). Only the latest active fault or lockout codes are displayed (if present). If no fault or lockout codes are active, then system status codes are displayed. Alert codes are also displayed on the S40 thermostat.

Alert Codes	Inverter Code	Inverter LED Flash Code (number of flashes)		Priority	Alarm Description	Possible Causes and Clearing Alarm
		Red LED	Green LED			
E 434	53	5 flashes	3 flashes	Moderate / Critical	Outdoor control has lost communications with the inverter for greater than 3 minutes. Outdoor unit will stop all compressor demand. Outdoor control will attempt to establish communication multiple times and will automatically clear when the error clears. Unit will lock out after 60 minutes if communication is not established and will display a critical error code.	**Issues**: (1) Outdoor disconnect is off or outdoor power is off, when indoor power is on (source for 24VAC) (2) Loose electrical power connections (3) Interruption of main power to the inverter (4) Generator powers indoor unit, but not the outdoor unit. **Corrective Actions:** (1) To reset, cycle the indoor power off (source of 24VAC to outdoor unit) and back on. This will de-energize outdoor control and inverter by cycling the contactor. (2) Make sure the disconnect is on (3) Check electrical power supply connections (4) Check for proper main 230V power supply
E 435	60	6 flashes	OFF	Moderate / Critical	Inverter internal error.	When this error occurs, the outdoor control will cycle power to the inverter by opening the contactor for 2 minutes. Check that the EEPROM is properly seated. After power is cycled to the inverter 3 times, the outdoor unit is locked out.
E 436	62	6 flashes	2 flashes	Moderate / Critical	Inverter heat sink temperature exceeded limit. Occurs when the heat sink temperature exceeds the inverter limit. Inverter issues code 13 first, then slows down to allow the heat sink to cool. If temperature remains high, outdoor unit stops (compressor and fan). Anti-short cycle is initiated. If condition occurs 5 times within an hour, system is locked out. To clear, disconnect power to the indoor unit (24VAC power source to the outdoor control) which will power off the outdoor control and will open the outdoor unit contactor, which interrupts power to the inverter and then re-apply power.	**Issue**: Feedback from supplier tear down of inverter indicates that the screws that hold the inverter to the inverter board were loose causing poor contact between these two components. **Corrective Action:** Tighten screws that hold the heat sink to the inverter control board. **NOTE**: Wait five minutes to all capacitor to discharge before checking screws.
E 437	65	6 flashes	5 flashes	Moderate / Critical	Heat sink temperature sensor fault has occurred (temperature less than 4 ºF or greater than 264ºF after 10 minutes of operation).	This occurs when the temperature sensor detects a temperature less than 0.4ºF or greater than 264ºF after 10 minutes of operation. If condition is detected, outdoor unit will stop (compressor and fan). Antishort cycle is initiated. If condition occurs 5 times within an hour, system will lock out. To clear, disconnect power to the indoor unit (24VAC power source to the outdoor control) which will power off the outdoor control and will open the outdoor unit contactor, which interrupts power to the inverter and then re-apply power.

TABLE 19. Outdoor Control 7-Segment Display Alert Codes and Inverter LED Flash Codes

NOTE - System fault and lockout codes take precedence over system status codes (cooling, heating operating percentages or defrost/dehumidification). Only the latest active fault or lockout codes are displayed (if present). If no fault or lockout codes are active, then system status codes are displayed. Alert codes are also displayed on the S40 thermostat.

Alert Codes	Inverter Code	Inverter LED Flash Code (number of flashes)		Priority	Alarm Description	Possible Causes and Clearing Alarm
		Red LED	Green LED			
E 438	73	7 flashes	3 flashes	Moderate / Critical	The inverter has detected a PFC over current condition. This would be caused by a high load condition, high pressure, or outdoor fan failure. Outdoor control will display the code when the inverter has the error. After 3 minutes, the inverter will reset and the compressor will turn on again. If it happens 10 times within a 60 minute rolling time period, the OD control will lock out operation of the outdoor unit and display a critical code.	**Issue**: Possible issue is system running at high pressures. Check for high pressure trips or other alert codes in room thermostat and outdoor control. To clear, disconnect power to the indoor unit (24VAC power source to the outdoor control) which will power off the outdoor control and will open the outdoor unit contactor, which interrupts power to the inverter and then re-apply power.
E 439	12	1 flash	2 flashes	Minor	Compressor slowdown due to high input current.	This error code is primarily for informational purposes as the inverter controls the compressor to operate within design parameters. Typically the inverter will make a minor speed reduction of 4 Hz (approximately a 5-6% speed reduction) for a brief period of time and to reduce the input current and will then resume normal operation.
E 440	13	1 flash	3 flashes	Minor	Heat sink temperature is approaching limit. The compressor speed automatically slows to reduce heat sink temperature. The control sets indoor CFM and outdoor RPM to values according to demand percentage rather than the actual Hz. Alarm is automatically cleared.	This error code is primarily for informational purposes as the inverter controls the compressor speed to operate within design parameters. Typically the inverter will make a minor speed reduction of 4 Hz (approximately a 5-6% speed reduction) for a brief period of time and to reduce the heat sink temperature and will then resume normal operation. This may occur at high outdoor temperatures (above 110ºF) for brief periods of time (3 – 4 minutes) and is normal and expected operation of the inverter controlling the compressor safely within design parameters. The inverter finned aluminum heat sink is located on the back side of the inverter in the condenser air stream. f the alert code 440 occur frequently, especially at lower outdoor temperatures, check the heat sink for debris that may reduce heat transfer or possible obstructions that may impact air flow across the heat sink. The inverter will begin to briefly reduce the compressor speed when the heat sink temperature rises above 185ºF and will allow the inverter to resume the requested compressor demand speed once the inverter heat sink reaches 176ºF. The heat sink temperature, compressor speed in Hertz & the Inverter Compressor Speed Reduction status (“On” or “Off ”) notification can be viewed under the outdoor unit Diagnostics section of the thermostat dealer control center on units installed with an S40 thermostat.

TABLE 19. Outdoor Control 7-Segment Display Alert Codes and Inverter LED Flash Codes

NOTE - System fault and lockout codes take precedence over system status codes (cooling, heating operating percentages or defrost/dehumidification). Only the latest active fault or lockout codes are displayed (if present). If no fault or lockout codes are active, then system status codes are displayed. Alert codes are also displayed on the S40 thermostat.

Alert Codes	Inverter Code	Inverter LED Flash Code (number of flashes)		Priority	Alarm Description	Possible Causes and Clearing Alarm
		Red LED	Green LED			
E 441	14	1 flash	4 flashes	Minor	Compressor slowdown due to high compressor current. Compressor current is approaching limit. The compressor speed automatically slows. The control sets indoor CFM and outdoor RPM to values according to demand percentage rather than the actual Hz. Alarm is automatically cleared..	This error code is primarily for informational purposes as the inverter controls the compressor to operate within design parameters. Alert code 441 typically occurs at startup as the compressor as the currently increases rapidly during startup. The inverter will reduce the compressor speed by 4 hz and slow the compressor ramp up speed to the requested compressor demand (capacity). This is normal and expected operation of the inverter to control the compressor within design parameters. In most cases the alert code 441 does not require any additional service or diagnostic procedures. E441 may also occur if the system is operating at high pressures. This error code is primarily for informational purposes as the inverter controls the compressor to operate within design parameters. Alert code 441 typically occurs at startup as the compressor as the currently increases rapidly during startup. The inverter will reduce the compressor speed by 4 hz and slow the compressor ramp up speed to the requested compressor demand (capacity). This is normal and expected operation of the inverter to control the compressor within design parameters. In most cases the alert code 441 does not require any additional service or diagnostic procedures. E441 may also occur if the system is operating at high pressures.

System Refrigerant

⚠ IMPORTANT

The system must be operating at full capacity during charging. Using the Charge Mode Jumper on the outdoor control ensures the unit is running at 100% capacity. Confirm outdoor unit running capacity.

This section outlines the procedures to:

1 - Connect a gauge set for testing and charging as illustrated in figure 45.

2 - Check and adjust indoor airflow as described in figure 46.

3 - Add or remove refrigerant using the weigh-in method shown in figure 47.

4 - Verify the charge using the subcooling method described in figure 48.

IMPORTANT: Unit must be operating at 100% capacity to be charged properly.

ADDING OR REMOVING REFRIGERANT

This system uses R454B refrigerant which operates at slightly lower pressures than HFC-410A.

INDOOR AIRFLOW CHECK

Check airflow using the Delta-T (DT) process using the illustration in figure 46.

The diagnostic screen on the S40 thermostat displays the indoor CFMs on systems installed with the S40 communicating thermostat.

On systems installed with the S40 thermostat, the Cooling - Maximum Rate Test located in the Test section of the Dealer Control Center of the thermostat or the Lennox Dealer Setup App may be used to operate the unit at maximum capacity during charging.

Charge Mode Jumper

To initiate the EL18KCV Charge Mode function, install the jumper across the two Charge Mode Pins (CHRG MODE) on the outdoor control. The Charge Mode can be used when charging the system with refrigerant, checking the refrigerant charge, pumping down the system and performing other service procedures that requires outdoor unit operation at 100% capacity.

EL18KCV Charge Mode Operation with an S40 Communicating Thermostat

Installing a jumper on the Charge Mode Pins will initiate compressor operation and outdoor fan motor at 100% capacity and will provide a signal to the indoor unit to initiate indoor blower operation at the maximum cooling air volume. To exit the charge mode, remove the Charge Mode Jumper. The Charge Mode has a maximum time of 60 minutes and will automatically exit the charge mode after 60 minutes is the charge mode jumper is left in place.

EL18KCV Charge Mode Operation with a Conventional 24VAC Non-Communicating Thermostat

On applications with a conventional 24VAC non-communicating thermostat, the charge mode jumper must be installed on the Charge Mode Pins after providing a Y1 cooling demand to the EL18KCV to initiate the Charge Mode. A cooling blower demand must also be provided to initiate blower operation on the cooling speed on the indoor unit. The compressor and outdoor fan motor will operate at 100% capacity. To exit the charging mode, remove the Charge Mode Jumper and remove the Y1 Cooling demand and indoor blower demand. The Charge Mode has a maximum time of 60 minutes and will automatically exit the charge mode after 60 minutes is the charge mode jumper is left in place.

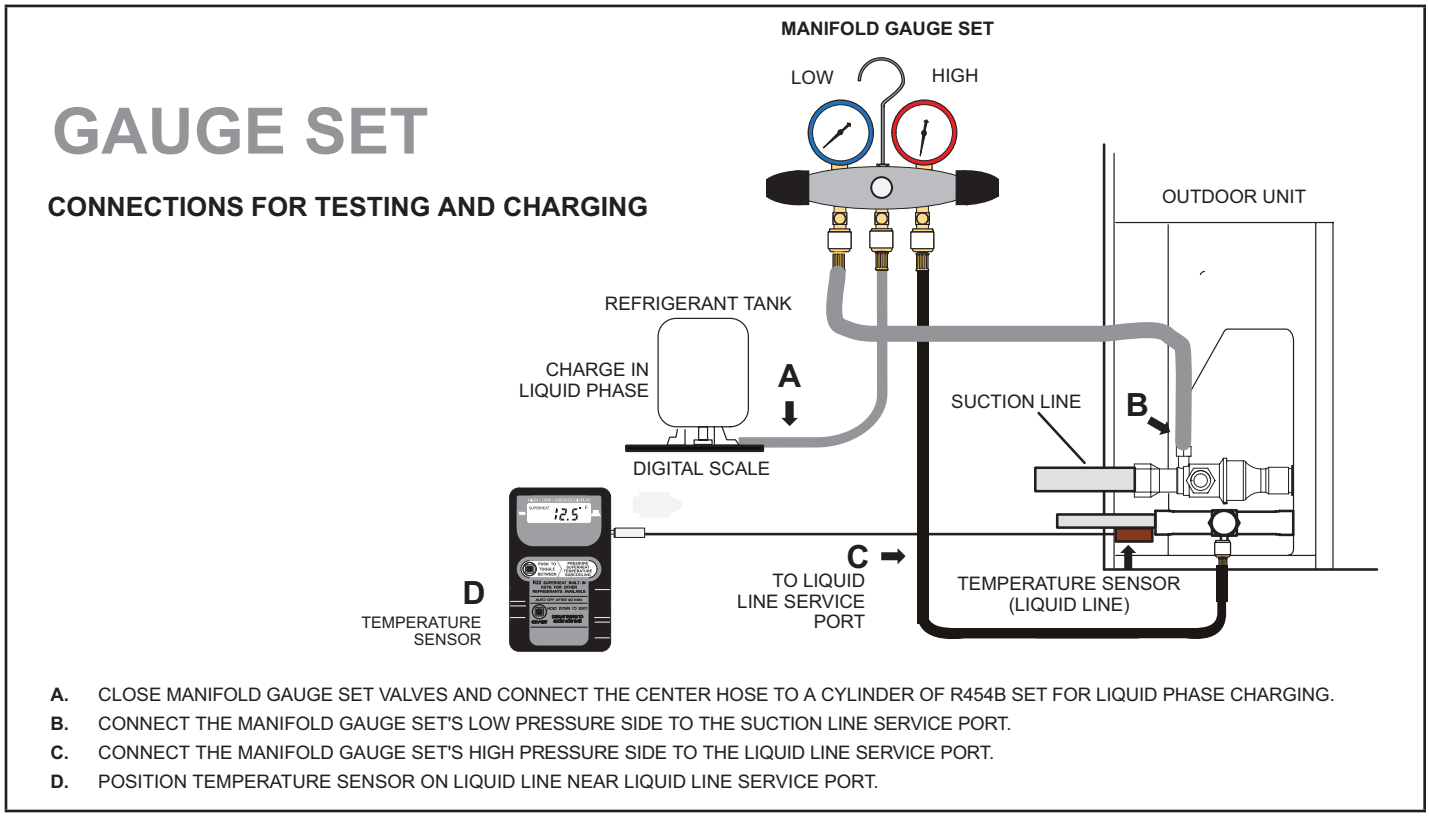

FIGURE 45. Gauge Set Connections

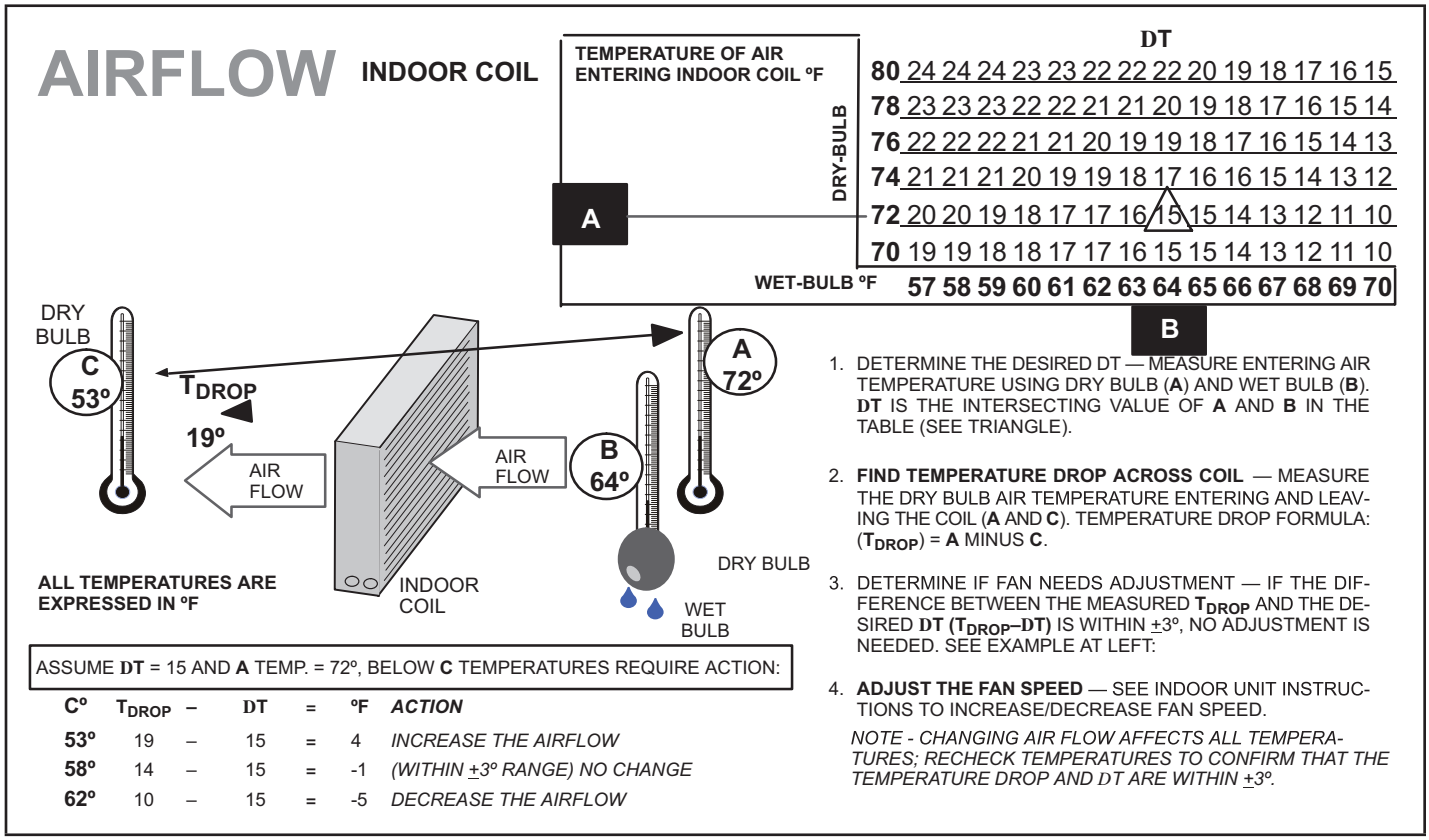

FIGURE 46. Checking Indoor Airflow over Evaporator Coil using Delta-T Chart

Charging

Verify the unit is electrically grounded before charging the system. Extreme care shall be taken not to overfill the refrigerating system.

Charge should be checked and adjusted using information outlined in this section and in the tables provided on the charging label on the unit's control access panel.

R-454B is a zeotropic blend of two refrigerants. At any given refrigerant pressure, R-454B will have two saturation temperatures, a saturated liquid temperature and a saturated vapor temperature. See R-454B Refrigerant Pressure Temperature Chart in the installation and service manual for saturation temperatures.

R-454B Units must be charged with liquid refrigerant. Follow conventional charging procedures when charging the system. The technician is required to mark the total charge of the installed system on the unit nameplate, which includes the nameplate charge (factory charge) and additional charge that is added to the system at the time of installation.

The R-454B refrigerant cylinders are provided with a ¼" LH flare connection, therefore a ¼" LH female flare adapter will be required. Connect manifold gauges and hoses following conventional charging procedures. Position the R-454B refrigerant cylinder to deliver liquid refrigerant.

SL25KCV unit is factory charged with R454B. Refer to unit Charging Label for baseline line set length for factory unit charge and Additional Charge guidelines.

Initiate a call for cooling and allow the refrigerant pressures and temperatures to stabilize. Adjust the charge to using the subcooling method. The unit charging label provides the target Subcooling Values. Record the liquid line temperature. Measure the liquid line pressure and use the value to determine the Saturated Liquid Temperature. Calculate subcooling by subtracting the liquid line temperature from the Saturated liquid temperature.

Subcooling = Saturated Liquid Temperature – Liquid Line Temperature

Compare the results with the unit charging label.

Once system charging has been completed, the additional charge and total charge must be marked on the unit nameplate. Total Charge = Factory Charge + Additional charge. The total charge is marked on the space adjacent to "Total Charge".

Use the WEIGH-IN method for adding initial refrigerant charge, and then use SUBCOOLING method for for verifying refrigerant charge.

WEIGH-IN CHARGING METHOD

64ºF (17.7ºC) and Below

Amount specified on nameplate _____ ± Adjust amount for variation in line set length and liquid line diameter using table below. _____ = Total charge _____

Liquid Line Set Diameter	R454B (ounces per foot)
5/16”	0.40
3/8”	0.60
1/2”	1.00

NOTE - Insulate liquid line when it is routed through areas where the surrounding ambient temperature could become higher than the temperature of the liquid line or when pressure drop is equal to or greater than 20 psig.

NOTE - The nameplate is shown for illustration purposes only. Go to actual nameplate on outdoor unit for charge information.

Charging Formula for Liquid Line Charge Adjustments

[(Line set oz./ft. x total length) - (factory charge for line set)] = charge adjustment

Example: Units are factory-charged for 15 feet (4.6 meters) of 3/8" line set. Factory charge for 3/8" is 0.60 oz/ft x 15 = 9.0 ounces.

FIGURE 47. Using Weigh-In Method

SUBCOOLING CHARGING METHOD

*(All charging **MUST** be performed while system is operating either at maximum speed or 100% demand.)*

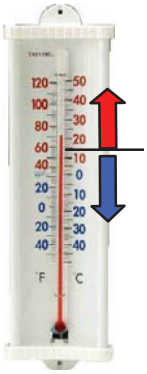

USE COOLING MODE

60ºF (15ºC)

USE HEATING MODE

1. THE DIAGNOSTIC SCREEN ON THE THERMOSTAT OR OUTDOOR CONTROL 7-SEGMENT DISPLAY WILL SHOW INDOOR AND OUTDOOR MOTOR CFMS OR RPMS.
2. MEASURE OUTDOOR AMBIENT TEMPERATURE.
3. CONNECT GAUGE SET.
4. CHECK LIQUID AND VAPOR LINE PRESSURES. COMPARE PRESSURES WITH COOLING MODE NORMAL OPERATING PRESSURES IN THE APPLICABLE CHARGING STICKER, NORMAL OPERATING PRESSURES AT MAXIMUM CAPACITY.
   NOTE - THE REFERENCE TABLE IS A GENERAL GUIDE. EXPECT MINOR PRESSURE VARIATIONS. SIGNIFICANT DIFFERENCES MAY MEAN IMPROPER CHARGE OR OTHER SYSTEM PROBLEM.
5. SET THERMOSTAT FOR HEAT/COOL DEMAND, DEPENDING ON MODE BEING USED:
   USING COOLING MODE — WHEN THE OUTDOOR AMBIENT TEMPERATURE IS 60°F (15°C) AND ABOVE. TARGET SUBCOOLING VALUES (MAXIMUM / 100% CAPACITY) IN APPLICABLE CHARGING STICKER ARE BASED ON 70 TO 80°F (21-27°C) INDOOR RETURN AIR TEMPERATURE; IF NECESSARY, OPERATE HEATING TO REACH THAT TEMPERATURE RANGE; THEN SET THE INITIAL COOLING DEMAND AT MAXIMUM CAPACITY. THE PREFERRED METHOD IS TO USE THE “CHARGE MODE” JUMPER ON THE OUTDOOR CONTROL. SEE CHARGE MODE JUMPER SECTION ON PAGE 80. WHEN PRESSURES HAVE STABILIZED, CONTINUE WITH STEP 6.
6. READ THE LIQUID LINE TEMPERATURE; RECORD IN THE LIQº SPACE.
7. READ THE LIQUID LINE PRESSURE; THEN FIND ITS CORRESPONDING TEMPERATURE IN THE TEMPERATURE/ PRESSURE CHART LISTED IN THE APPLICABLE CHARGING STICKER AND RECORD IT IN THE SATº SPACE.
8. SUBTRACT LIQº TEMPERATURE FROM SATº TEMPERATURE TO DETERMINE SUBCOOLING; RECORD IT IN SCº SPACE.
9. COMPARE SCº RESULTS WITH APPLICABLE CHARGING STICKER, BEING SURE TO NOTE ANY ADDITIONAL CHARGE FOR LINE SET AND/OR MATCH-UP.
10. IF SUBCOOLING VALUE IS GREATER THAN SHOWN IN APPLICABLE CHARGING STICKER FOR THE APPLICABLE UNIT, REMOVE REFRIGERANT; IF LESS THAN SHOWN, ADD REFRIGERANT.
11. IF REFRIGERANT IS ADDED OR REMOVED, REPEAT STEPS 6 THROUGH 10 TO VERIFY CHARGE.
12. DISCONNECT GAUGE SET AND RE-INSTALL BOTH THE LIQUID AND SUCTION SERVICE VALVE CAPS.

SATº _____

LIQº – _____

SCº = _____

FIGURE 48. Using Subcooling Method - High Speed (High Capacity)

TABLE 20. R454B Temperature (°F) - Pressure (Psig)

TABLE 21. EL18KCV Charging Label

Pressure (psig)	Saturated Liquid Temp (F°)	Saturated Vapor Temp (F°)	Pressure (psig)	Saturated Liquid Temp (F°)	Saturated Vapor Temp (F°)	Pressure (psig)	Saturated Liquid Temp (F°)	Saturated Vapor Temp (F°)	Pressure (psig)	Saturated Liquid Temp (F°)	Saturated Vapor Temp (F°)
0	-58.9	-57.1	158	58.9	61.3	272	93.0	95.4	362	113.4	115.6
25	-19.2	-17.2	160	59.6	62.0	274	93.5	95.9	364	113.8	116.0
30	-13.9	-11.8	165	61.4	63.8	276	94.0	96.4	366	114.2	116.4
35	-9.0	-6.9	170	63.1	65.5	278	94.5	96.9	368	114.6	116.8
40	-4.4	-2.3	175	64.9	67.3	280	95.0	97.4	370	115.0	117.2
45	-0.2	1.9	180	66.6	69.0	282	95.5	97.9	372	115.4	117.6
50	3.7	5.9	185	68.2	70.6	284	96.0	98.4	374	115.8	118.0
55	7.5	9.7	190	69.8	72.2	286	96.5	98.8	376	116.2	118.4
60	11.0	13.2	195	71.4	73.8	288	97.0	99.3	378	116.6	118.8
65	14.4	16.6	200	73.0	75.4	290	97.5	99.8	380	117.0	119.2
70	17.6	19.8	202	73.6	76.0	292	97.9	100.3	382	117.4	119.6
75	20.6	22.9	204	74.2	76.6	294	98.4	100.7	384	117.7	119.9
80	23.6	25.9	206	74.9	77.3	296	98.9	101.2	386	118.1	120.3
85	26.4	28.7	208	75.5	77.9	298	99.4	101.7	388	118.5	120.7
90	29.1	31.4	210	76.1	78.5	300	99.8	102.2	390	118.9	121.1
95	31.7	34.0	212	76.7	79.1	302	100.3	102.6	392	119.3	121.5
100	34.3	36.6	214	77.3	79.7	304	100.8	103.1	394	119.7	121.9
102	35.3	37.6	216	77.9	80.2	306	101.2	103.5	396	120.1	122.2
104	36.2	38.6	218	78.4	80.8	308	101.7	104.0	398	120.5	122.6
106	37.2	39.5	220	79.0	81.4	310	102.1	104.4	400	120.8	123.0
108	38.1	40.5	222	79.6	82.0	312	102.6	104.9	405	121.8	123.9
110	39.1	41.4	224	80.2	82.6	314	103.0	105.4	410	122.7	124.9
112	40.0	42.4	226	80.8	83.1	316	103.5	105.8	415	123.6	125.8
114	40.9	43.3	228	81.3	83.7	318	103.9	106.2	420	124.6	126.7
116	41.8	44.2	230	81.9	84.3	320	104.4	106.7	425	125.5	127.6
118	42.7	45.1	232	82.4	84.8	322	104.8	107.1	430	126.4	128.5
120	43.6	46.0	234	83.0	85.4	324	105.3	107.6	435	127.3	129.4
122	44.5	46.9	236	83.6	86.0	326	105.7	108.0	440	128.2	130.2
124	45.4	47.7	238	84.1	86.5	328	106.2	108.5	445	129.0	131.1
126	46.2	48.6	240	84.7	87.1	330	106.6	108.9	450	129.9	132.0
128	47.1	49.4	242	85.2	87.6	332	107.0	109.3	460	131.6	133.7
130	47.9	50.3	244	85.8	88.1	334	107.5	109.7	470	133.3	135.3
132	48.8	51.1	246	86.3	88.7	336	107.9	110.2	480	135.0	137.0
134	49.6	51.9	248	86.8	89.2	338	108.3	110.6	490	136.7	138.6
136	50.4	52.8	250	87.4	89.7	340	108.8	111.0	500	138.3	140.2
138	51.2	53.6	252	87.9	90.3	342	109.2	111.5	510	139.9	141.8
140	52.0	54.4	254	88.4	90.8	344	109.6	111.9	520	141.5	143.3
142	52.8	55.2	256	88.9	91.3	346	110.0	112.3	530	143.0	144.8
144	53.6	56.0	258	89.5	91.8	348	110.5	112.7	540	144.5	146.3
146	54.3	56.7	260	90.0	92.4	350	110.9	113.1	550	146.1	147.8
148	55.1	57.5	262	90.5	92.9	352	111.3	113.5	560	147.5	149.2
150	55.9	58.3	264	91.0	93.4	354	111.7	114.0	570	149.0	150.7
152	56.6	59.0	266	91.5	93.9	356	112.1	114.4	580	150.5	152.1
154	57.4	59.8	268	92.0	94.4	358	112.5	114.8	590	151.9	153.5
156	58.1	60.5	270	92.5	94.9	360	112.9	115.2	600	153.3	154.8

NOTES

1. R-454B is a zeotropic blend and must be charged with liquid refrigerant only.
2. Saturated liquid temperature is used to calculate liquid subcooling.
3. Saturated vapor temperature is used to calculate suction superheat.
4. See unit charging label for subcooling and additional charging information.

Charging Temperatures and Pressures – High Speed Only				
EL18KCV Unit	**-024**	**-036**	**-048**	**-060**
Table 1 – Subcooling Values (High Capacity) ***Saturation Temperature minus Liquid Temperature °F (°C) ± 1°F (0.5°C)***				
Temp. °F (°C)	10 (5.6)	11.5 (6.4)	10.5 (5.8)	11 (6.1)
Table 2 – Approach Values (High Capacity) ***Liquid Line Temperature minus Outdoor Ambient Temperature °F (°C) ± 1°F (0.5°C)***				
Temp. °F (°C)	4 (2.2)	4 (2.2)	5 (2.8)	6.5 (3.6)
Table 3 – Normal Operating Pressures (Liquid ± 10 / Suction ± 5 psig)				
Air Temp Entering Outdoor Coil	***The values below are typical pressures; indoor evaporator match-up, indoor air quantity, and evaporator load will cause the pressure to vary.*** **Liquid Line Pressure / Vapor Line Pressure**			
65 (18.3)	217/133	225/125	223/118	230/120
70 (21.1)	235/134	242/127	242/122	249/121
75 (23.9)	254/135	261/128	261/125	268/123
80 (26.6)	274/135	281/129	282/127	289/123
85 (29.4)	296/136	302/130	303/128	311/124
90 (32.2)	317/136	324/131	325/130	333/125
95 (35.0)	340/137	347/132	348/131	357/126
100 (37.7)	365/138	371/133	372/132	378/127
105 (40.6)	390/138	396/134	396/133	403/128
110 (43.3)	416/140	423/135	422/134	430/129
115 (46.1)	443/142	451/136	449/135	456/130

The unit is factory-charged with R454B refrigerant in the amount indicated on the unit rating plate. This charge is based on a matching indoor coil and outdoor coil using a 30 foot (9.1 m) line set. On line sets with 3/8" (9.5mm) liquid line, add 3oz. additional refrigerant for every 5ft. longer than 30ft. If line length is less than 30ft., subtract this amount (see Installation Instructions for more details).

0525 581344-02

Decomissioning

Before carrying out this procedure, it is essential that the technician is completely familiar with the equipment and all its detail. It is recommended good practice that all refrigerants are recovered safely. Prior to the task being carried out, an oil and refrigerant sample shall be taken in case analysis is required prior to re-use the recovered refrigerant. It is essential that electrical power is available before the task is commenced.

A - Become familiar with the equipment and its operation.

B - Isolate system electrically.

C - Before attempting the procedure, ensure that:

- mechanical handling equipment is available, if required, for handling refrigerant cylinders;
- all personal protective equipment is available and being used correctly,
- the recovery process is supervised at all times by a competent person;
- recovery equipment and cylinders conform to the appropriate standards.

D - Pump down refrigerant system, if possible.

E - If a vacuum is not possible, make a manifold so that refrigerant can be removed from various parts of the system.

F - Make sure that cylinder is situated on the scales before recovery takes place.

G - Start the recovery machine and operate in accordance with instructions.

H - Do not overfill cylinders (no more than 80% volume liquid charge).

I - Do not exceed the maximum working pressure of the cylinder, even temporarily.

J - When the cylinders have been filled correctly and the process completed, make sure that the cylinders and the equipment are removed from site promptly and all isolation valves on the equipment are closed off.

Recovered refrigerant shall not be charged into another REFRIGERATING SYSTEM unless it has been cleaned and checked.