NBF SIGNATURE — SERIES —

800-558-1010 | www.NBF.com

AT WORK-48" Hutch ASSEMBLY INSTRUCTIONS

Congratulations on the purchase of your new *Signature Series product!*

COMPONENTS

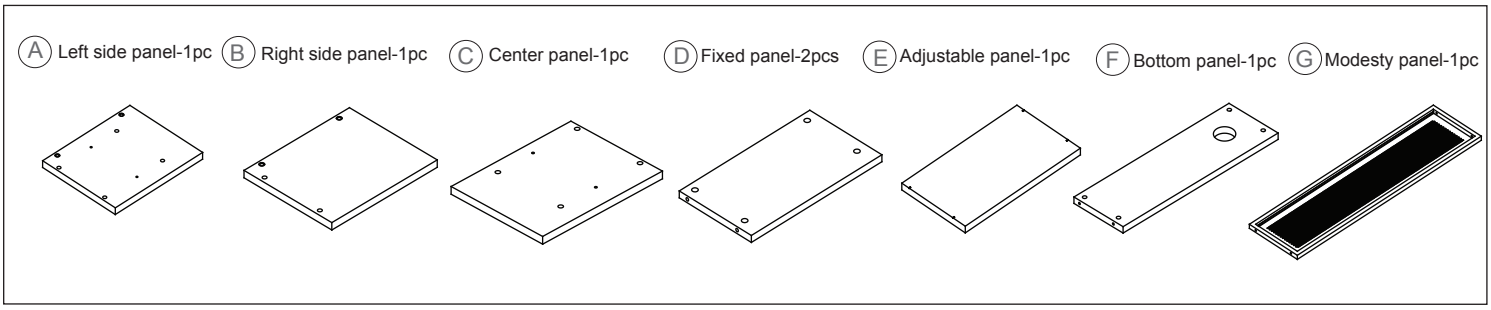

HARDWARE & TOOLS

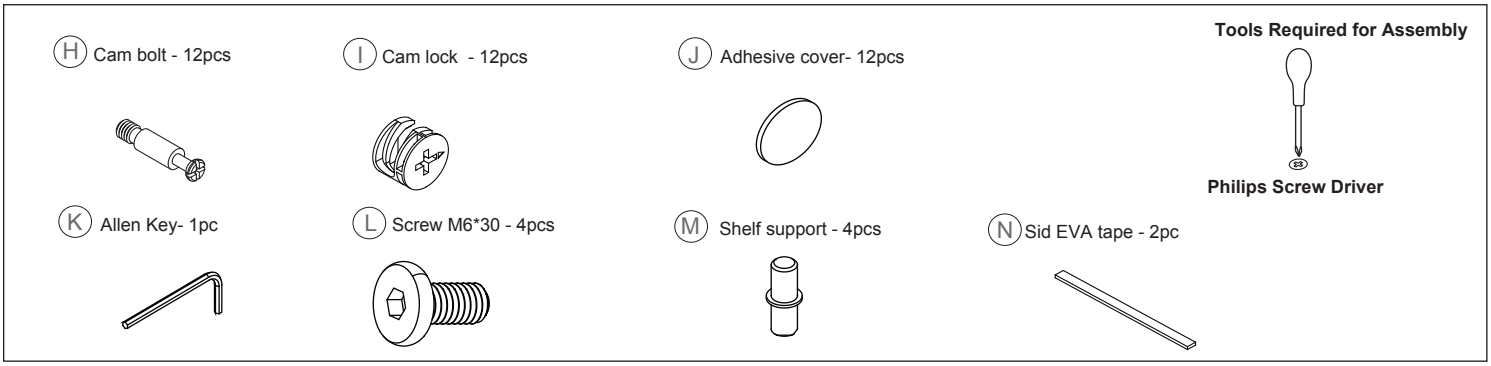

INSTRUCTIONS

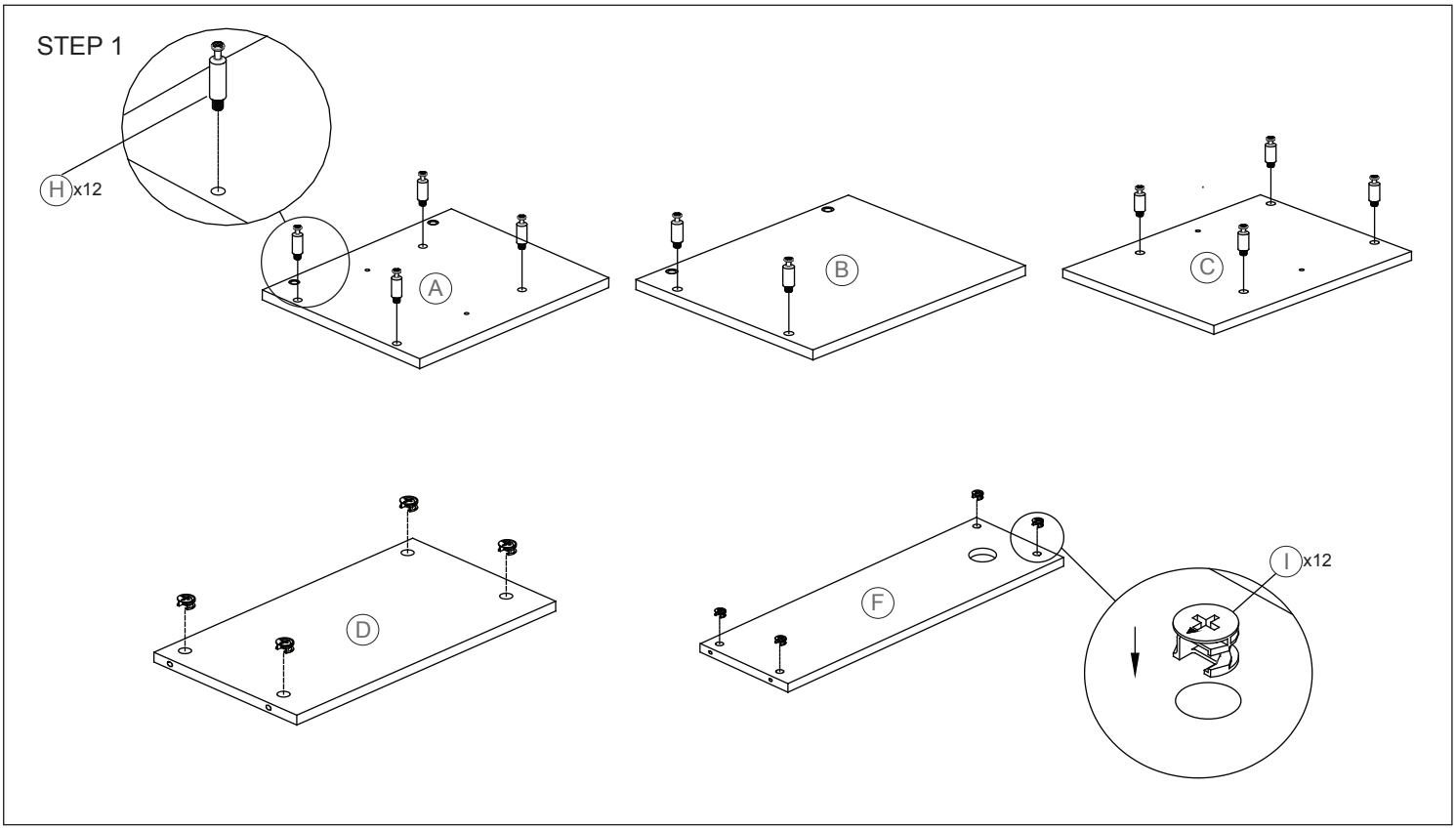

Congratulations on the purchase of your new *Signature Series product!*

INSTRUCTIONS

STEP 2

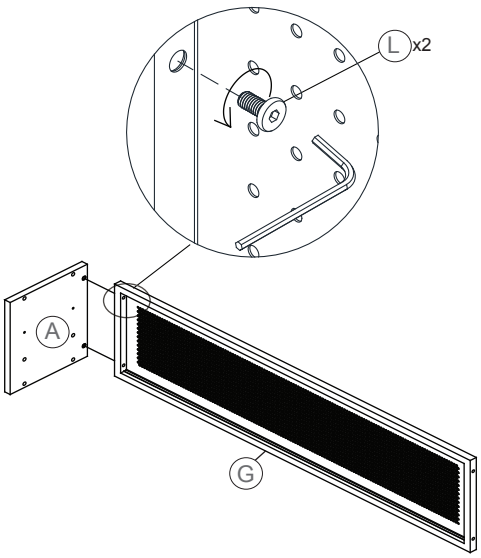

STEP 3

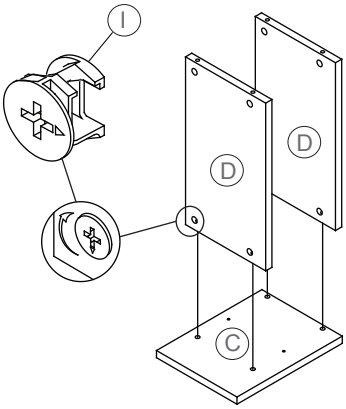

STEP 4

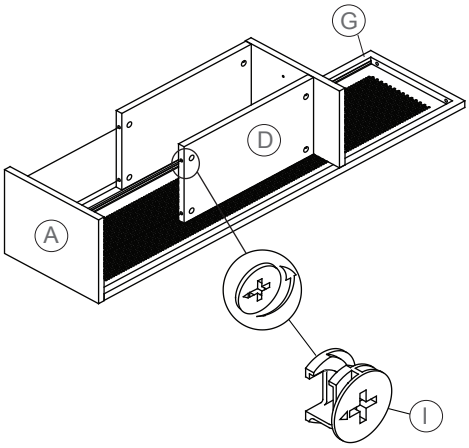

STEP 5

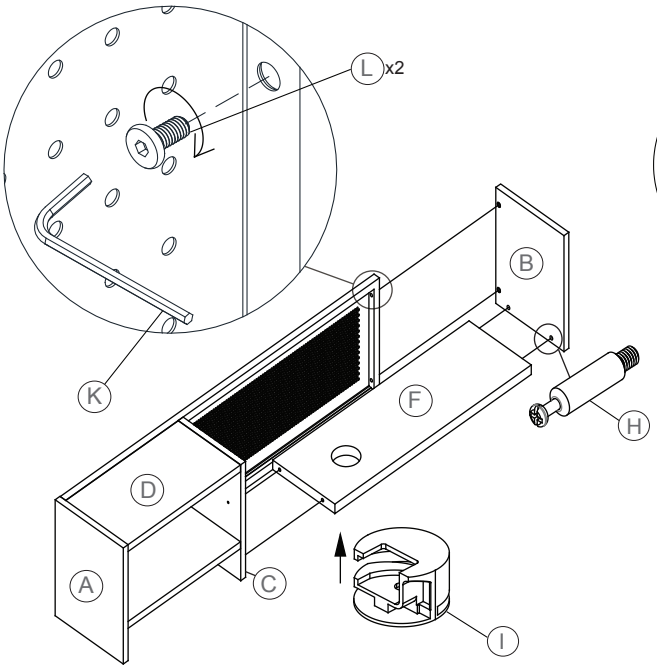
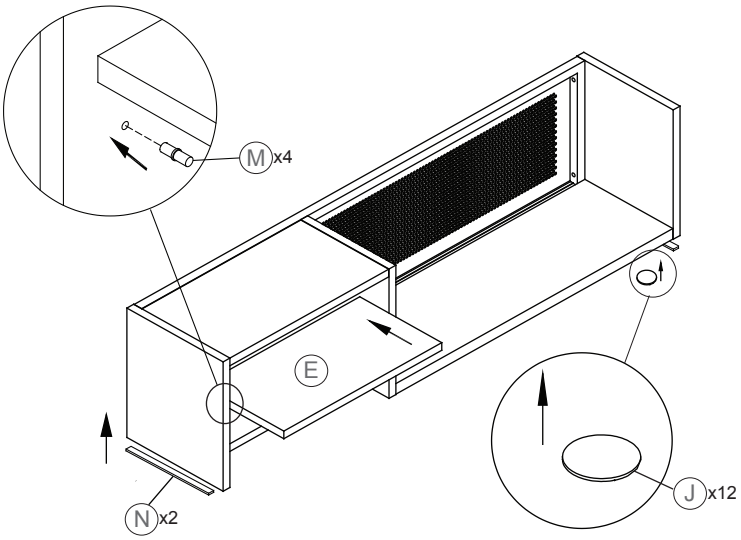
STEP 6