NBF SIGNATURE — SERIES —

800-558-1010 | www.NBF.com

AT WORK - Media Cabinets ASSEMBLY INSTRUCTIONS

Congratulations on the purchase of your new *Signature Series product!*

COMPONENTS

Parts in carton A

Ⓐ Top -1pc

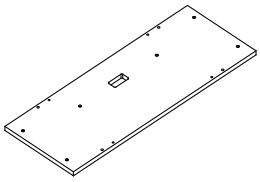

Ⓑ Bottom -1pc

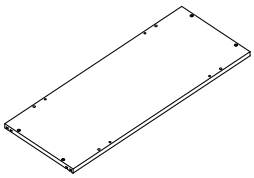

Ⓒ Top shelf -1pc

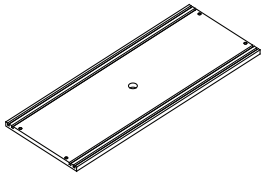

Ⓓ Middle Shelf - 1pcs

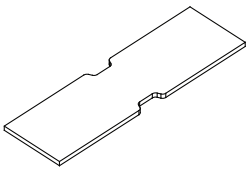

Ⓔ Top Rod - 2pcs

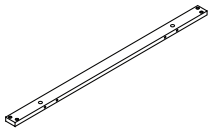

Ⓕ Bottom Rod - 2pcs

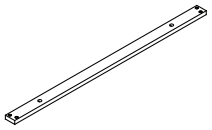

Ⓖ Door w/o Look -2pcs

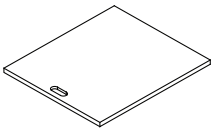

Ⓗ Door w/ Look -2pcs

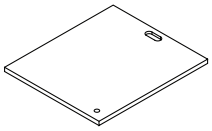

Ⓘ Left Mesh Panel -1pc

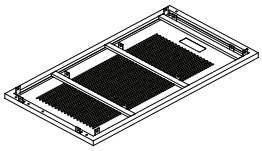

Ⓙ Right Mesh Panel -1pc

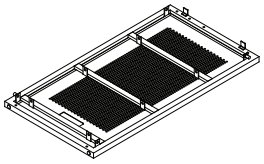

Ⓚ Connecting Rod -1pc

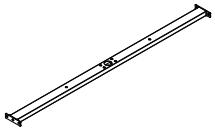

Ⓛ Vertical TV Mount Tube -1pc

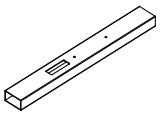

Ⓜ TV Mount -1pc

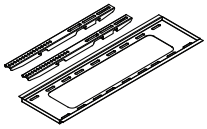

HARDWARE & TOOLS

Ⓝ Bolt M6*30mm - 2pcs

Ⓞ Bolt M6*12mm - 46pcs

Ⓟ Allen Wrench 4mm - 1pc

Ⓠ Wood dowel - 8pcs

Tools Required for Assembly

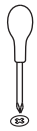

Philips Screw Driver

Ⓢ Cam Lock

Ⓣ 4.0*12 Screw

Ⓡ Cam bolt - 8pcs

Ⓢ Cam Lock - 8pcs

Ⓣ 4.0*12 Screw - 8pcs

Ⓤ Lock & Key - 2set

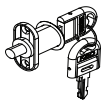

Ⓥ Grommet - 1pc

Ⓦ Rectangular Grommet - 6pcs

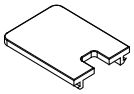

Ⓧ Adjustabie Glide - 4pcs

Ⓨ Washer 1.0*16W - 2pcs

Ⓩ Screw M8*33 - 4pcs

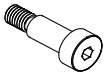

Ⓐⓐ Allen Wrench 5mm- 1pc

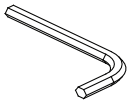

Ⓑⓑ L-Bracket - 8pcs

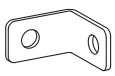

Ⓒⓒ Power Bar 3000mm - 1pc

Ⓓⓓ Washer 1.5*19W - 4pcs

NBF SIGNATURE — SERIES —

800-558-1010 | www.NBF.com

AT WORK - Media Cabinets
ASSEMBLY INSTRUCTIONS

Congratulations on the purchase of your new *Signature Series product!*

COMPONENTS

STEP 1

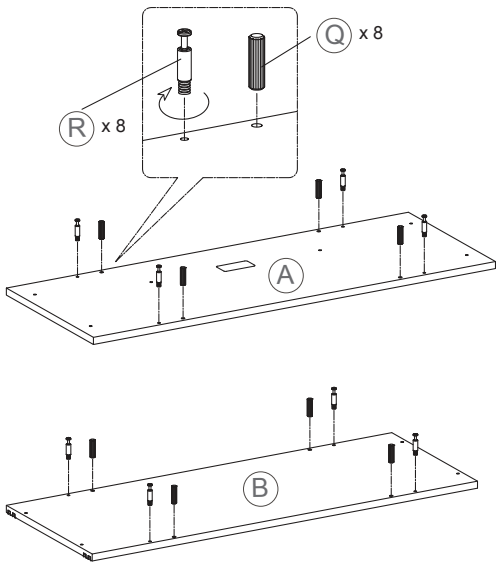

STEP 2

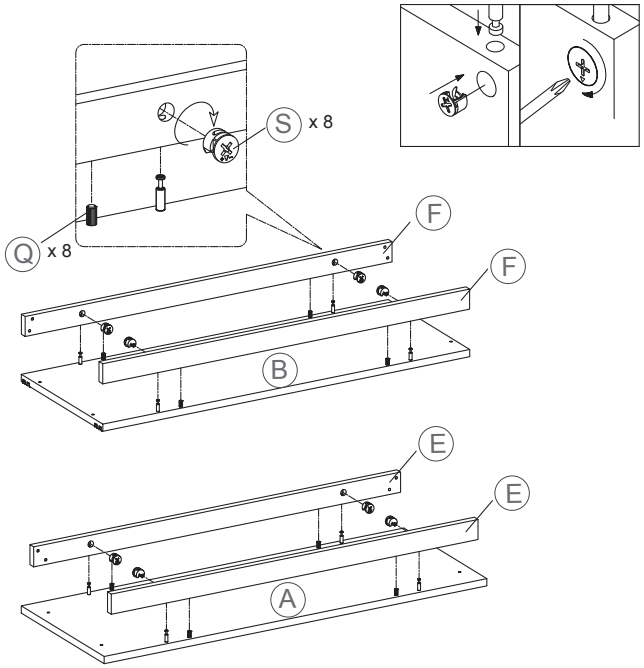

STEP 4

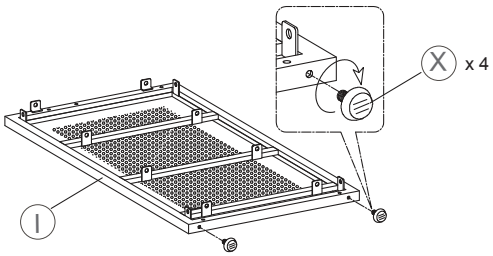

STEP 3

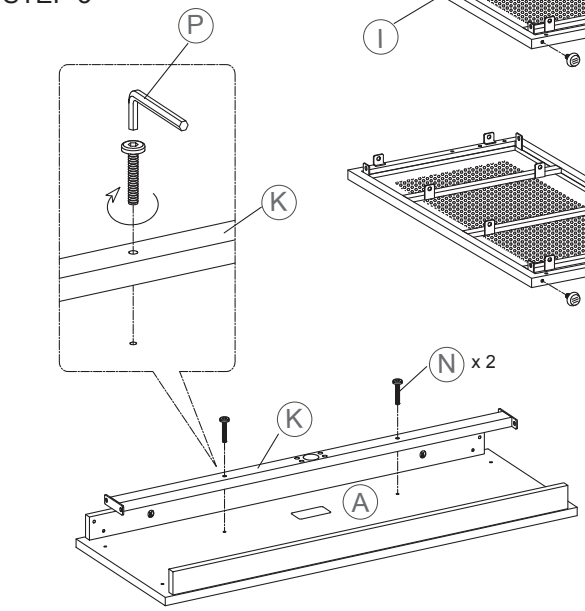

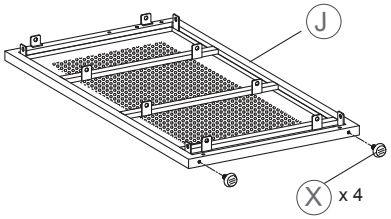

STEP 5

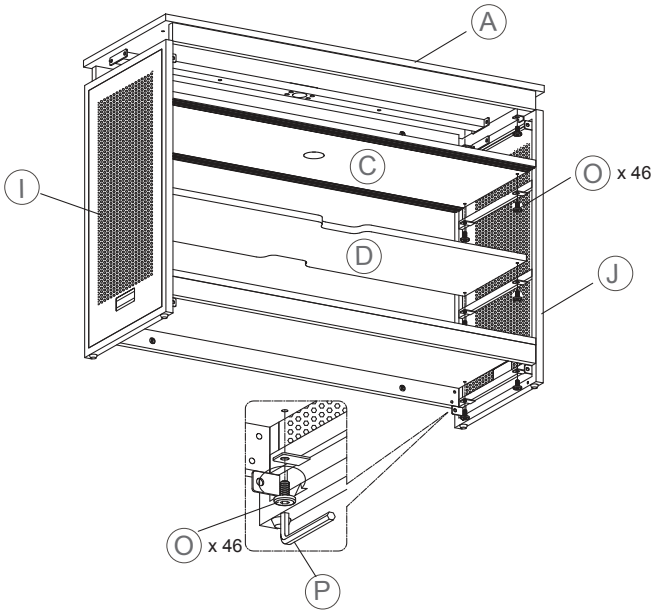

Congratulations on the purchase of your new *Signature Series product!*

COMPONENTS

STEP 6

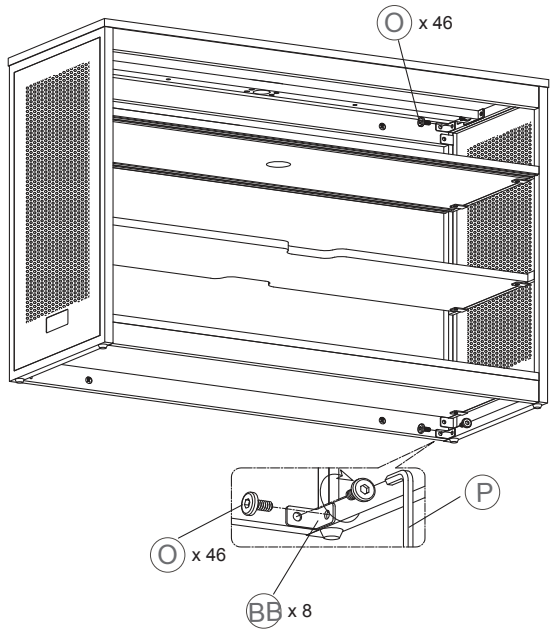

STEP 7

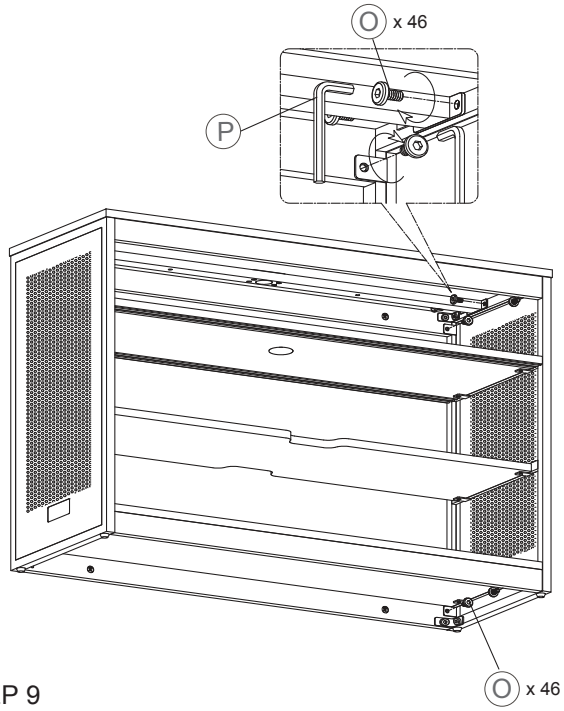

STEP 8

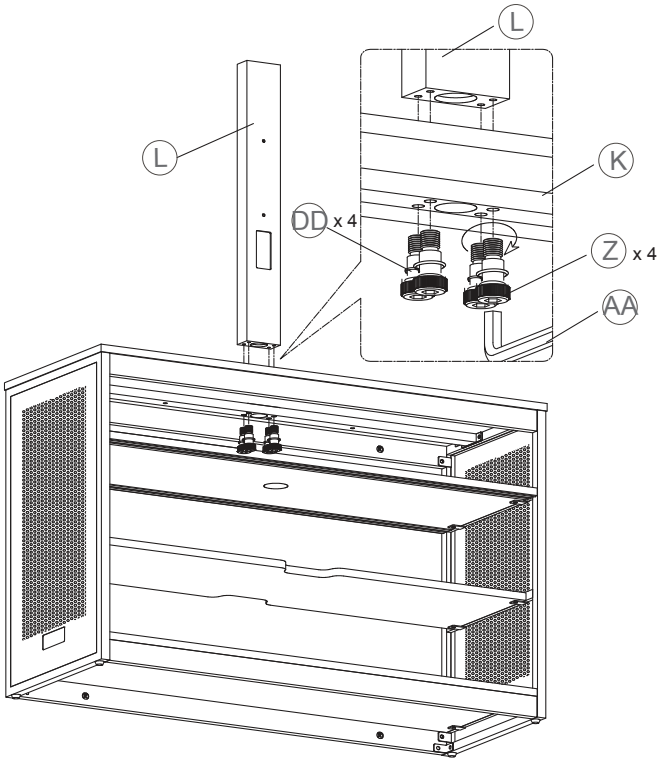

STEP 9

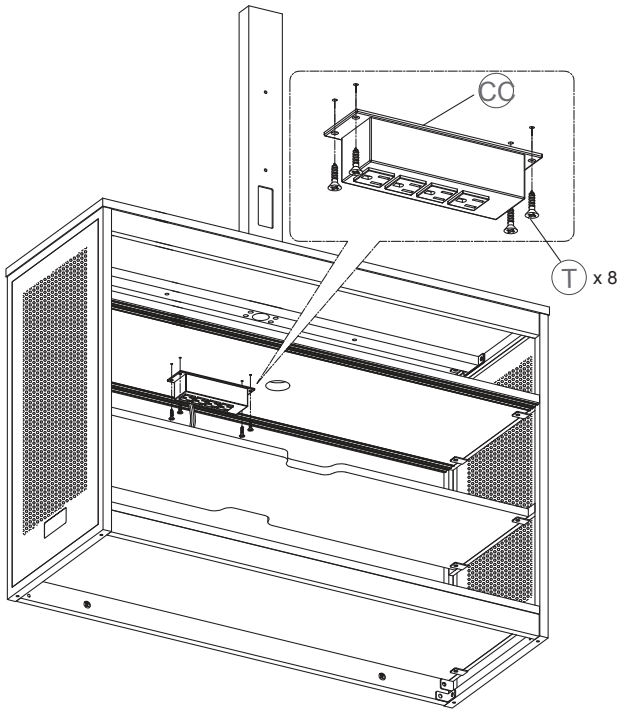

Congratulations on the purchase of your new *Signature Series product!*

COMPONENTS

STEP 10

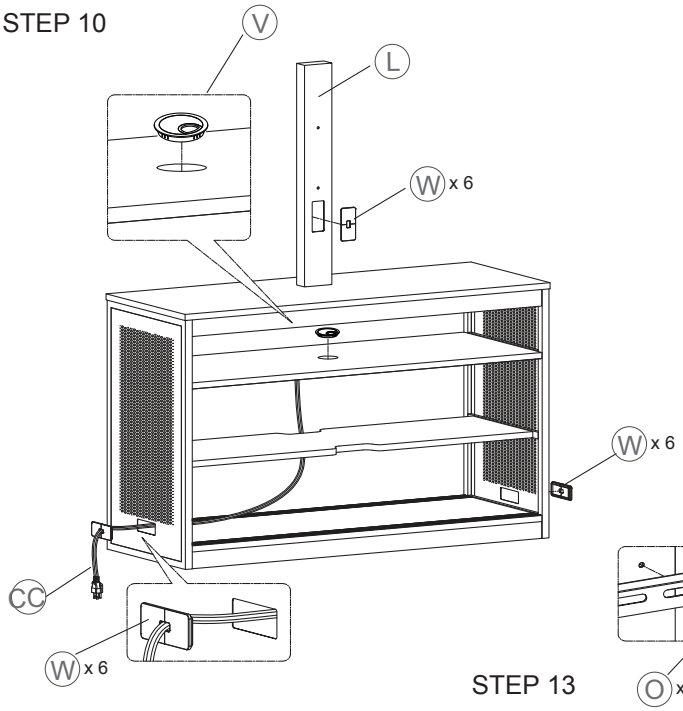

STEP 11

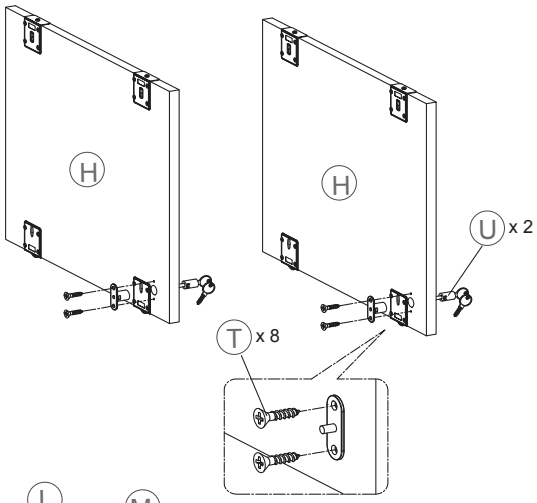

STEP 12

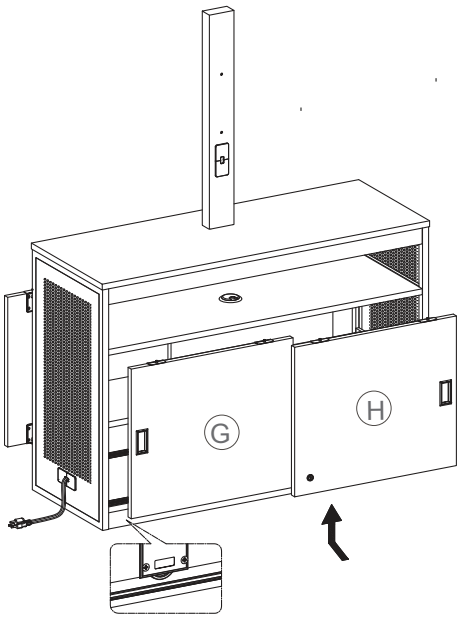

STEP 13

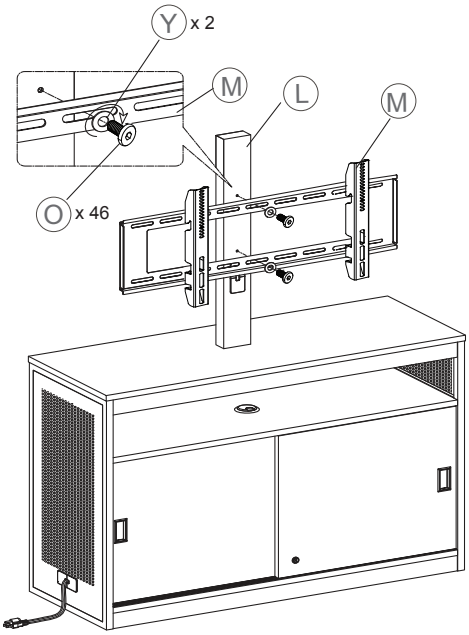
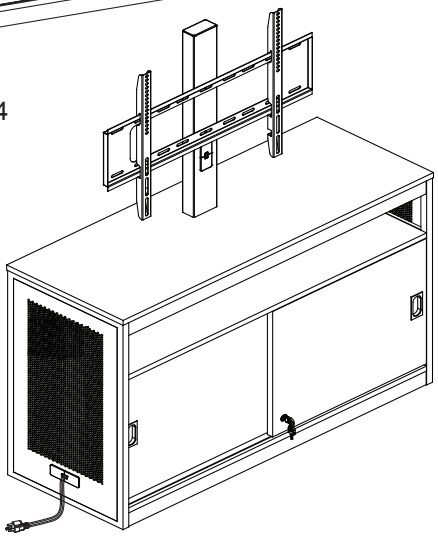
STEP 14