**please unscrew B screws from cushion before assembly.**

## MODEL : 8909

| (1)x1 | (2)x1 | (3)x1 (L)x1 (R) |
|---|---|---|
| Back | 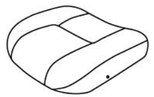 Seat | Right & Left Frame |
| **(4)x1** | **(5)x1** | |
| Back Bar | Front Bar | |

| | | |
|---|---|---|
| (A)x4 | | M6*80 FRAME SCREW |
| (B)x4 | | M6*25 BACK BAR SCREW |
| (C)x2 | | M6*20 SEAT SCREW |
| (D)x2 | 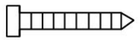 | M6*55 ARM SCREW |
| (E)x6 | | WOOD CAP |

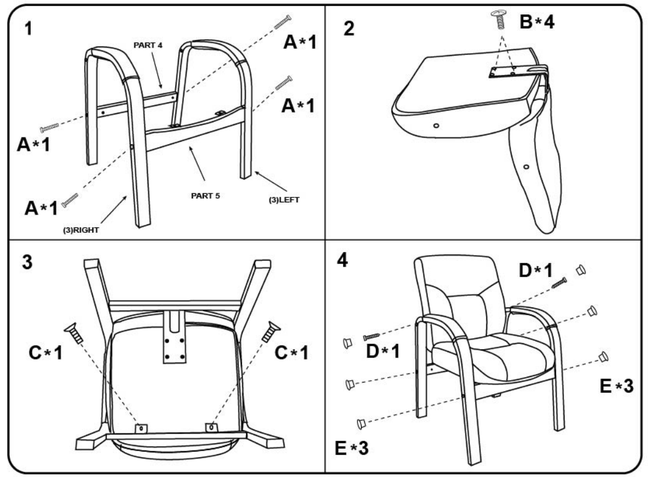


NOTE: Before insert all 6 (E) wood caps to screw holes:
1. Lightly tighten the screws indicate on step 1.
2. Tighten ALL 6 screws on step 4, then insert ALL 6 (D) wood caps to finish.

**Insert and loosely tighten all screws. When assembly is completed, fully tighten all screws before using. This chair is only intended for sitting. Any other use will void the warranty.**

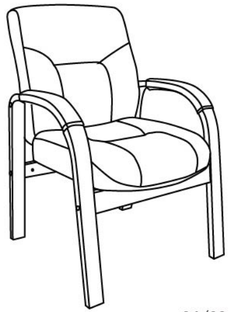

04/09

**please unscrew B screws from cushion before assembly.**

## MODEL: B8909N

| (1)X1 | (2)X1 | (3)X1 |
|---|---|---|
| Back | 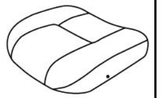 Seat | WF031-FB Front Bar |
| **(4)X1** | **(5)X1 (L)** | **(5)X1 (R)** |
| WF031-BB Back Bar | WF031-RF Wood Frame-Right | WF031-LF Wood Frame-Left |

| | | |
|---|---|---|
| (A)x2 | | M6*80 Front Frame |
| (B)x4 | | M6*25 L-bar |
| (C)x2 | | M6*20 Front Bar |
| (D)x2 | | M6*35 Back Frame |
| (E)x6 | | Insert Caps |
| (F)x2 |  | M6*65 Back Frame |

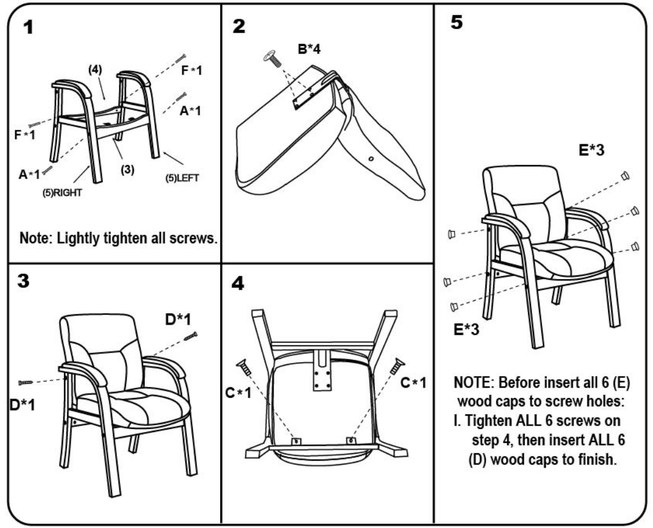


**Insert and loosely tighten all screws. When assembly is completed, fully tighten all screws before using. This chair is only intended for sitting. Any other use will void the warranty.**

12/10

**Customer Service Hotline: 1-800-593-1888 For further assembly instructions, please visit our website at www.bosschair.com**