Reception Desk
ASSEMBLY INSTRUCTIONS

COMPONENTS

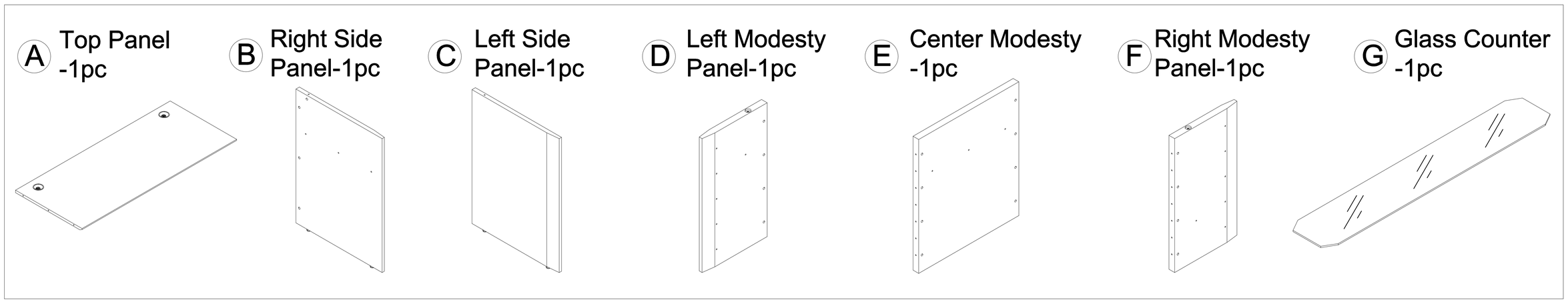

HARDWARE & TOOLS

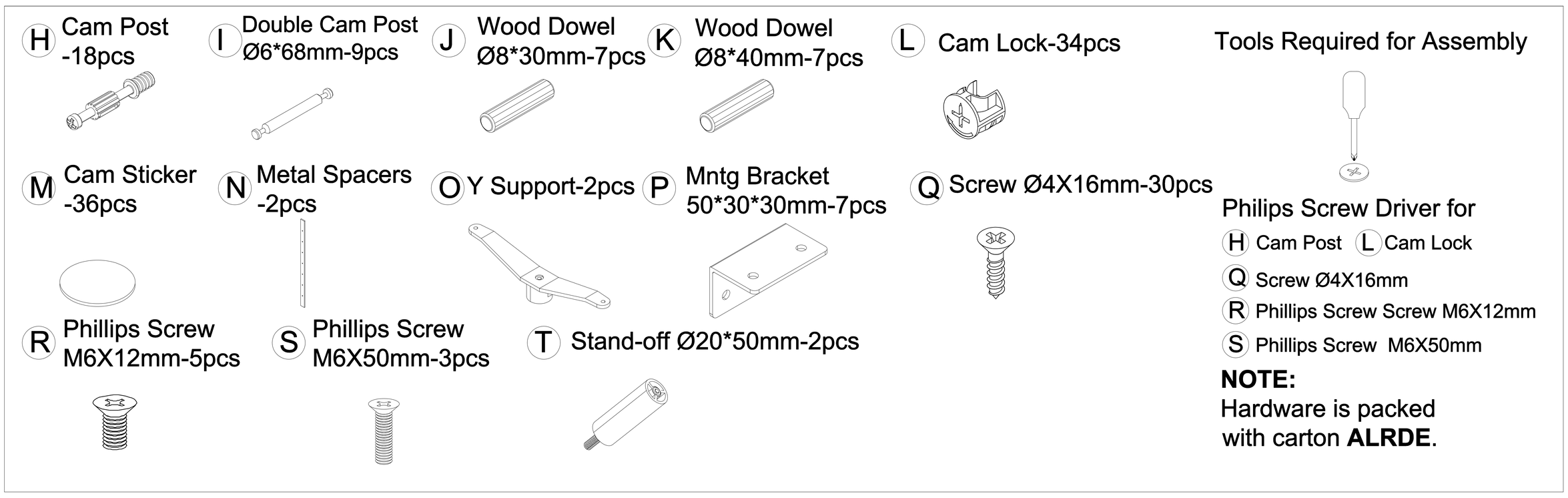

INSTRUCTIONS - Do not use power tools to assemble

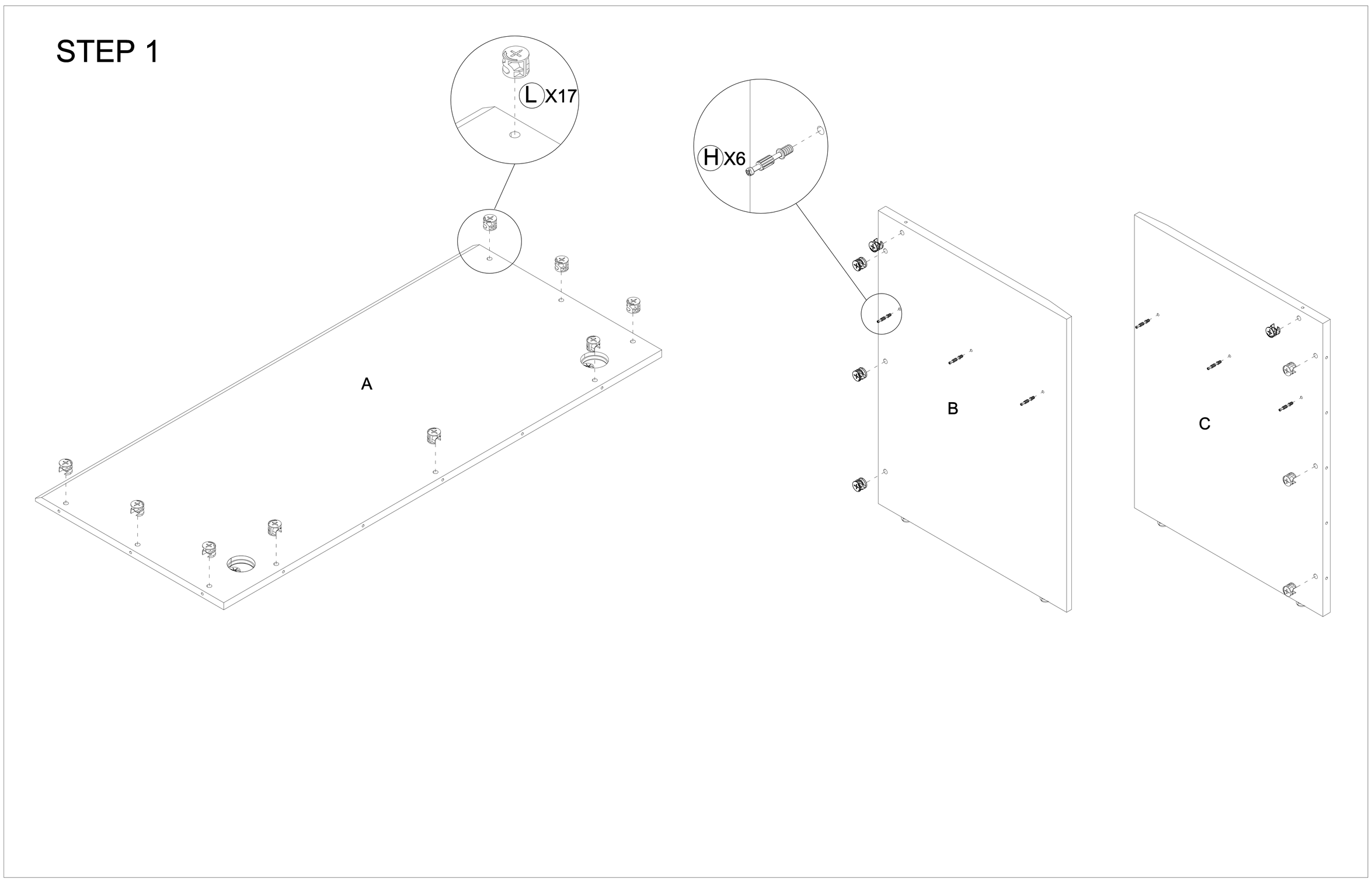

ALRDT / ALRDE / ALRDC

INSTRUCTIONS

STEP 2

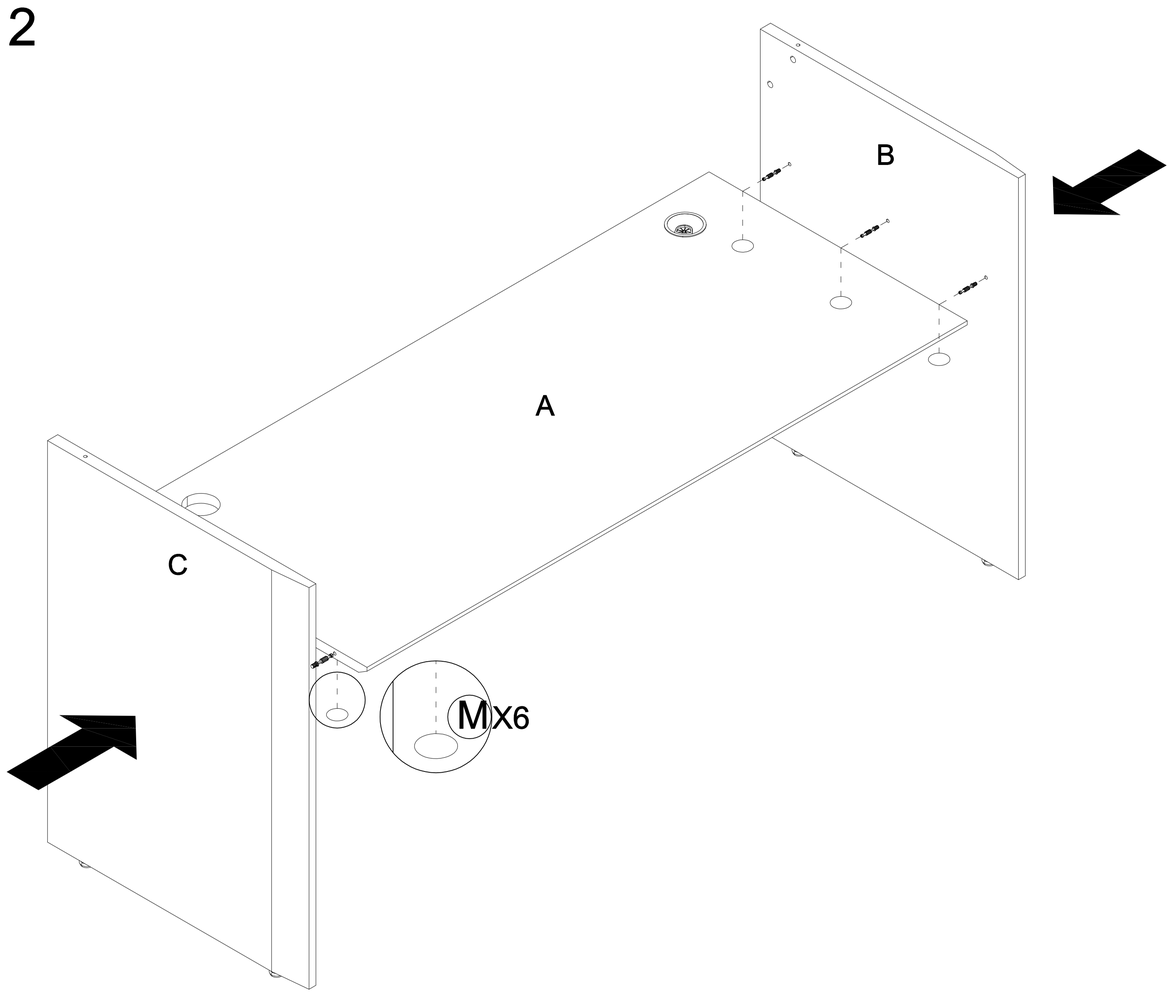

STEP 3

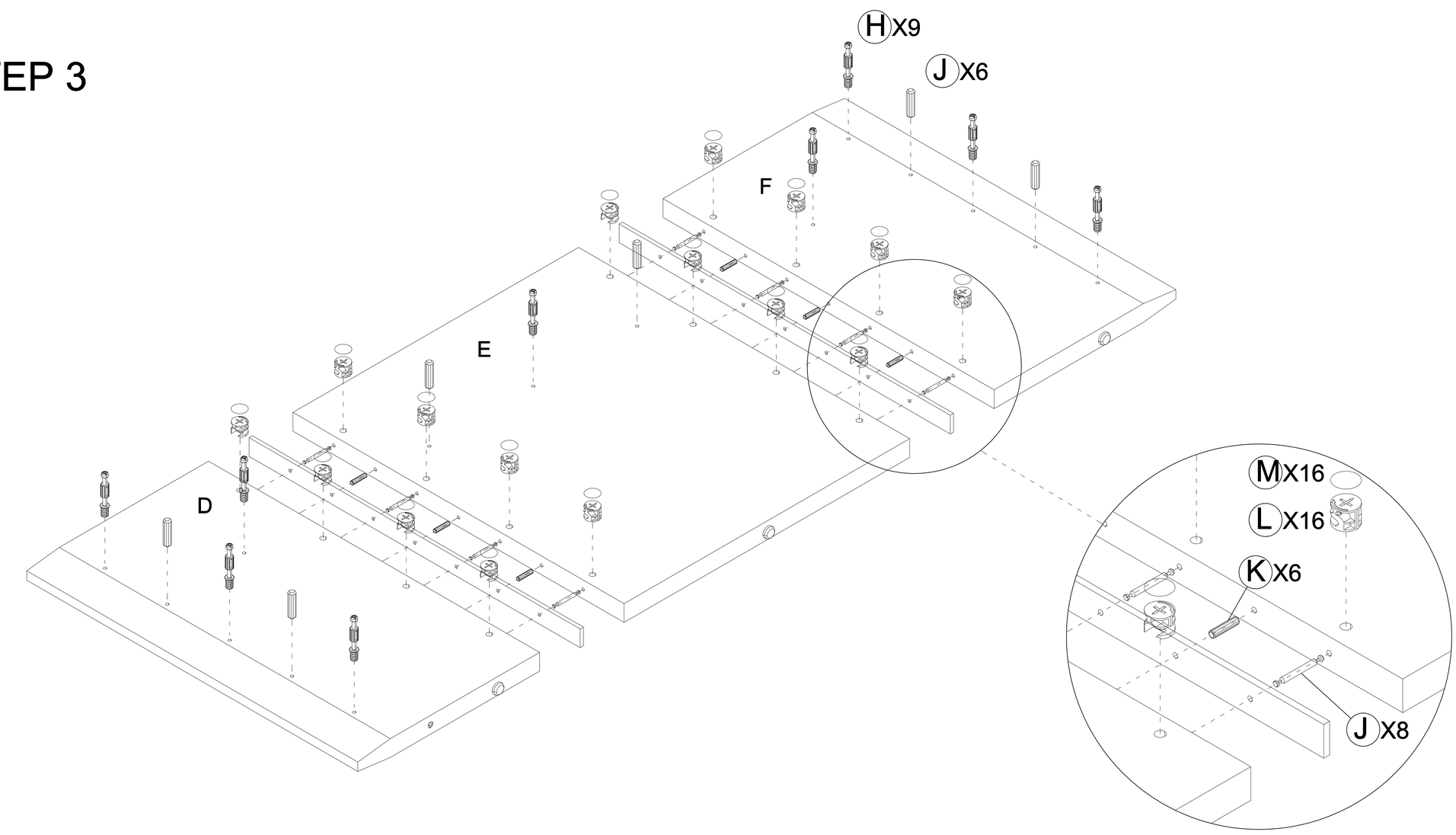

INSTRUCTIONS

STEP 4

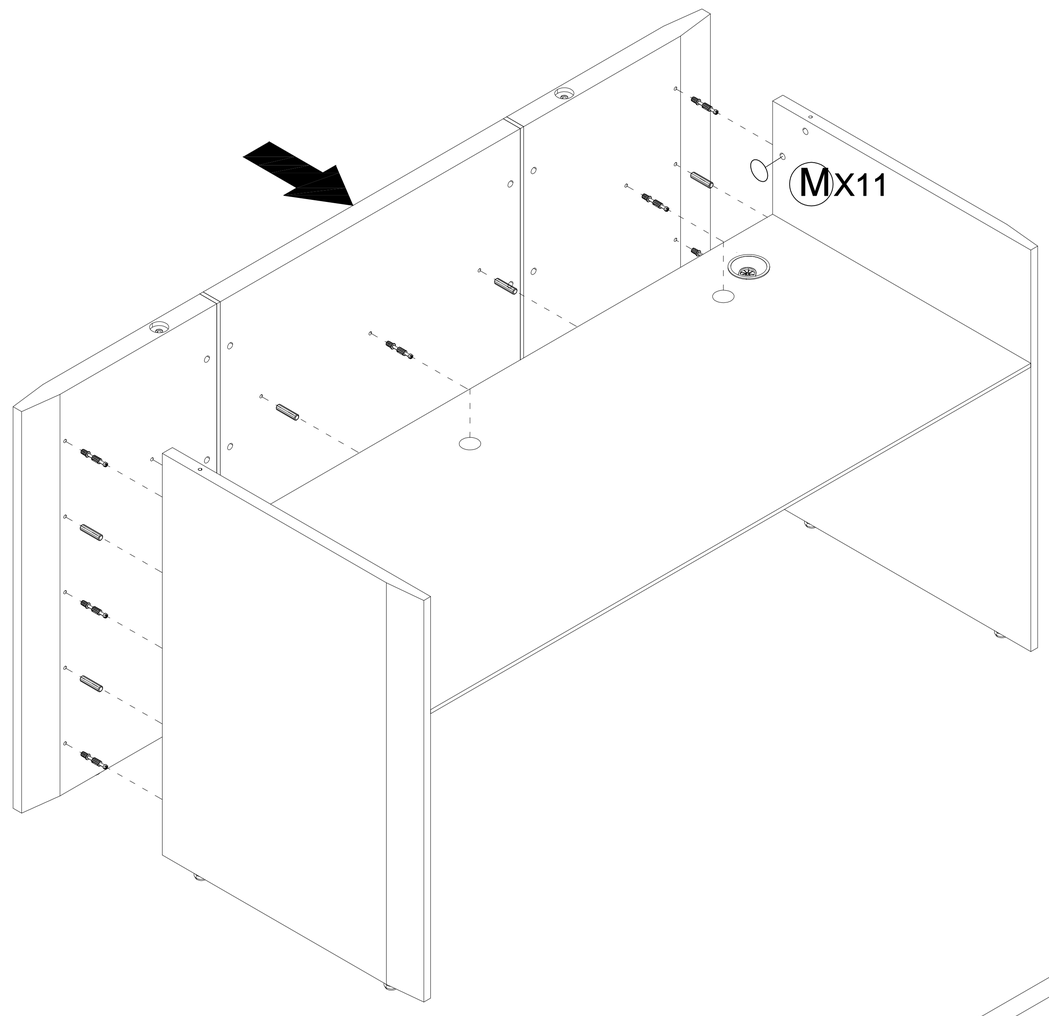

STEP 5

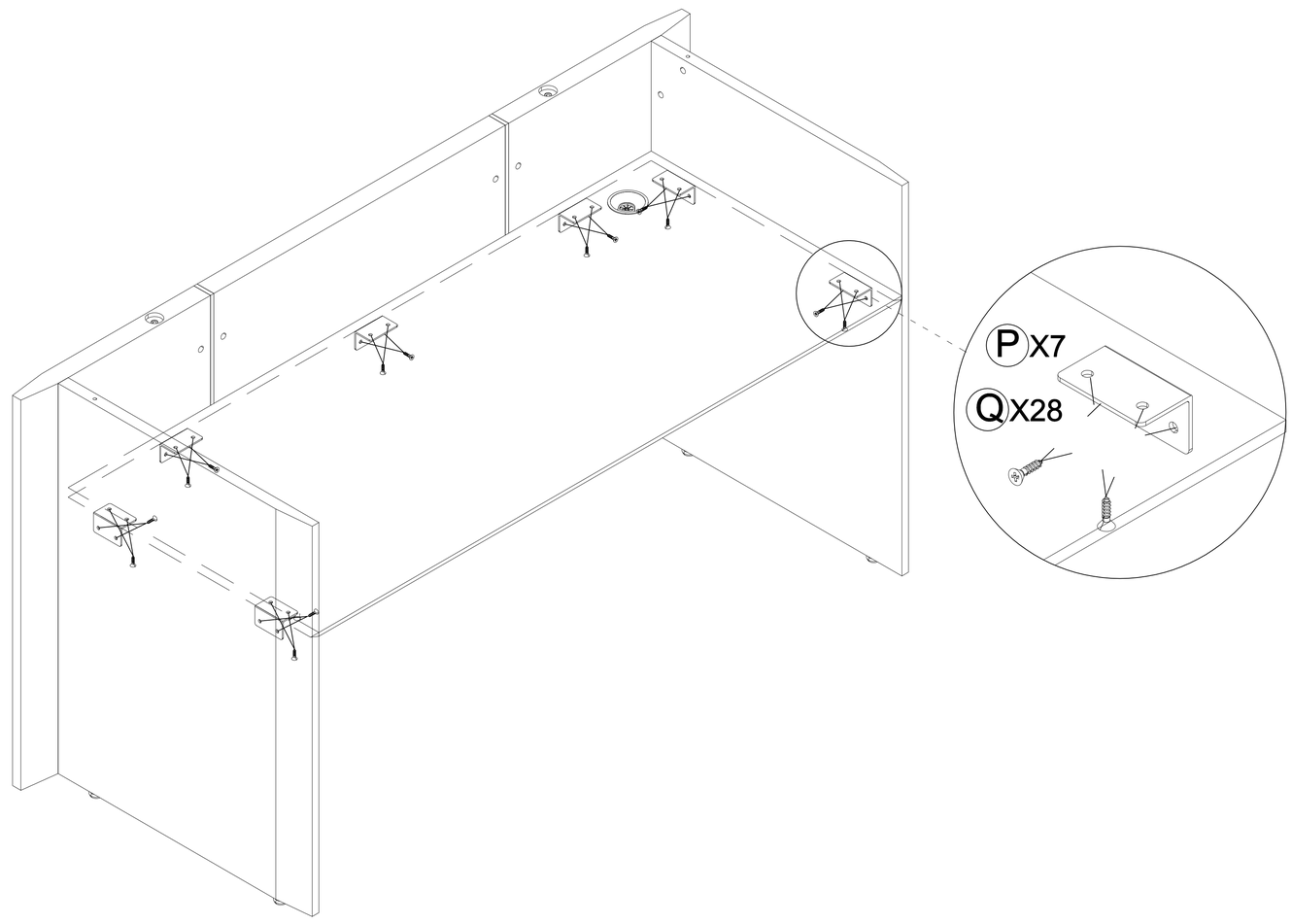

STEP 6

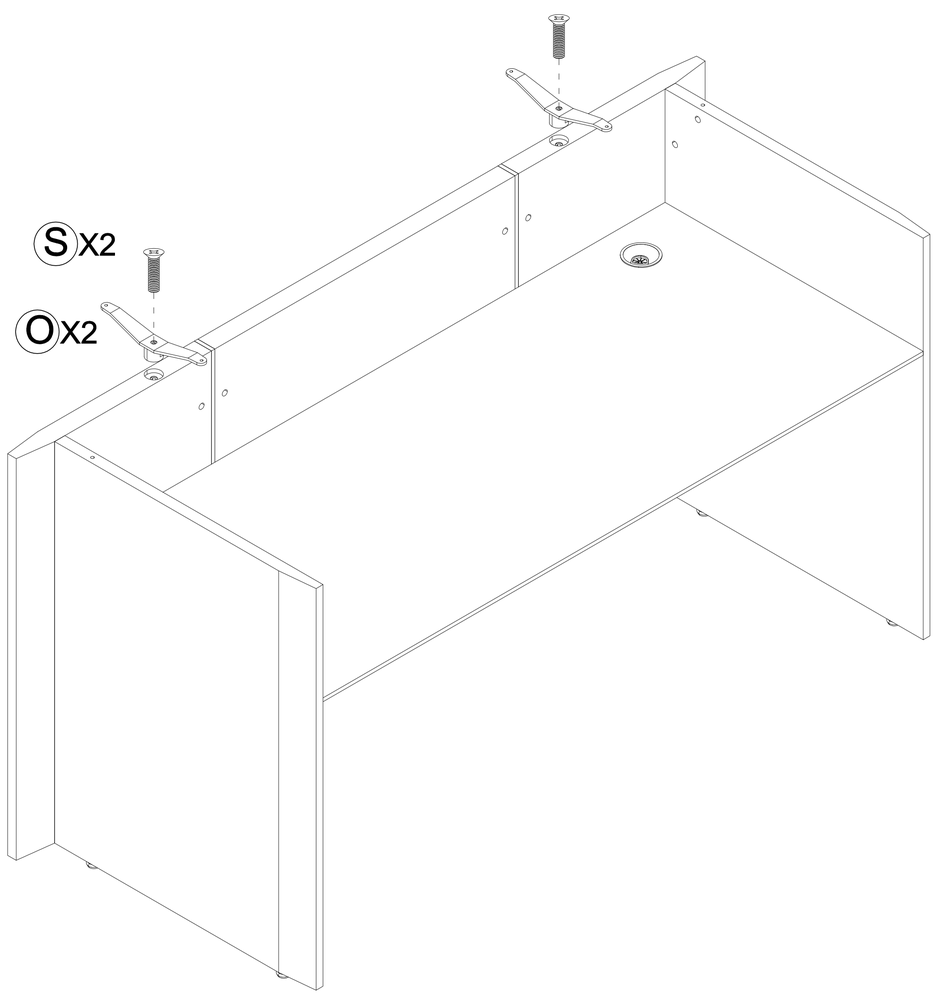

STEP 7

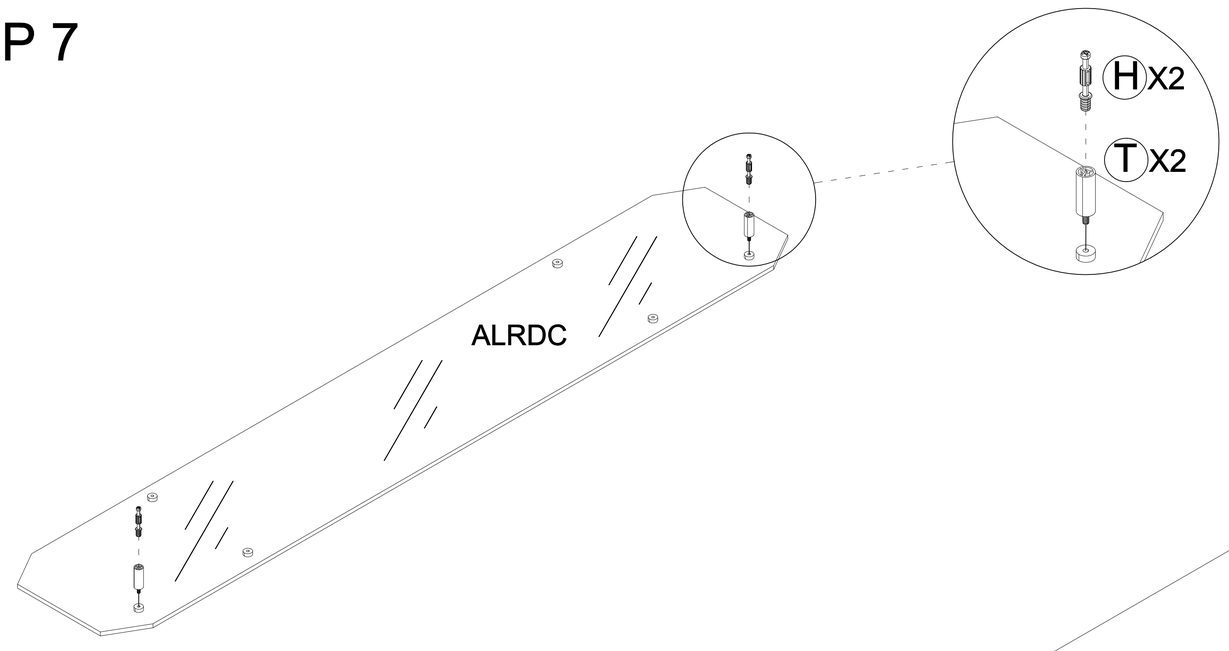

STEP 8

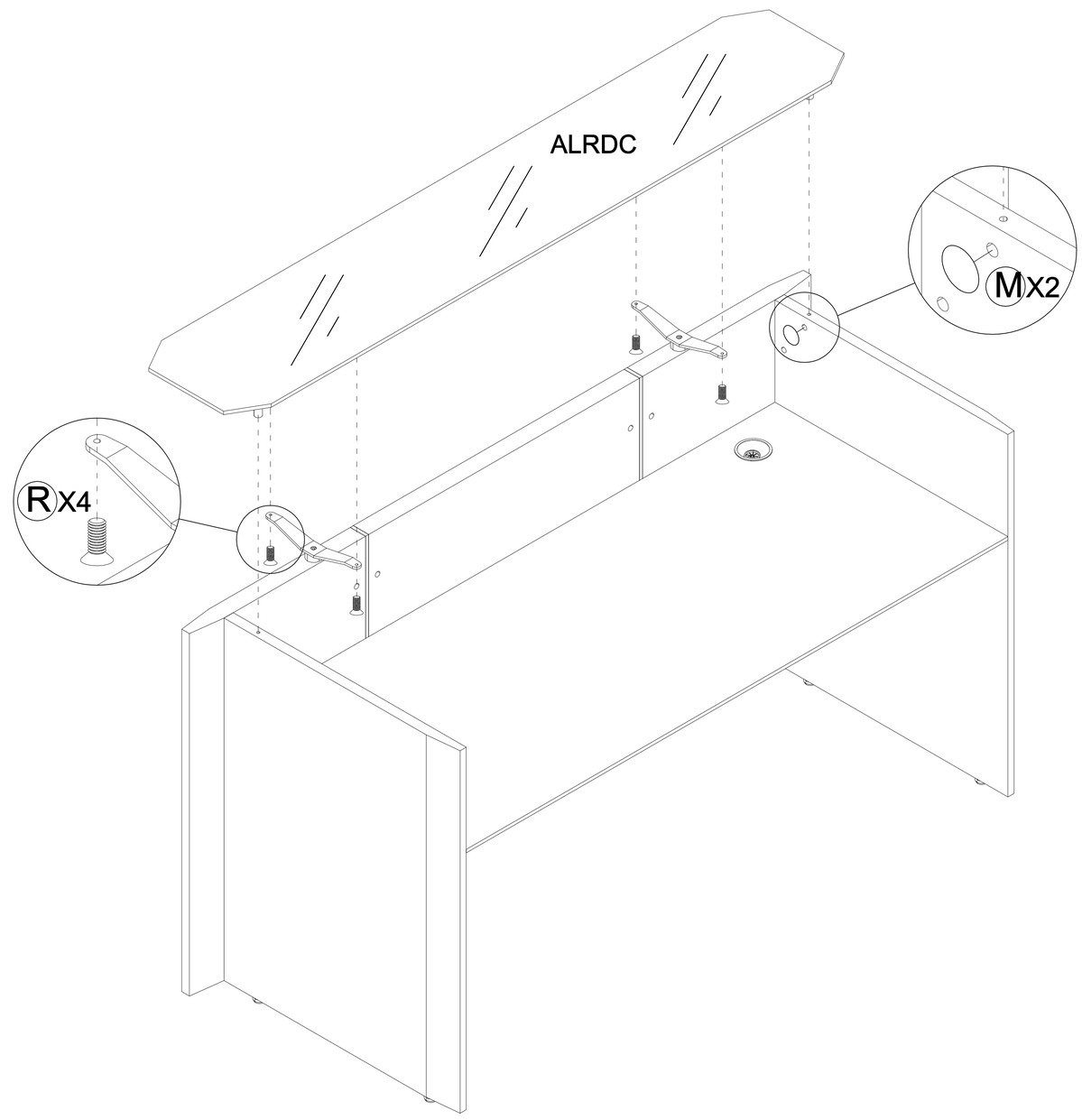
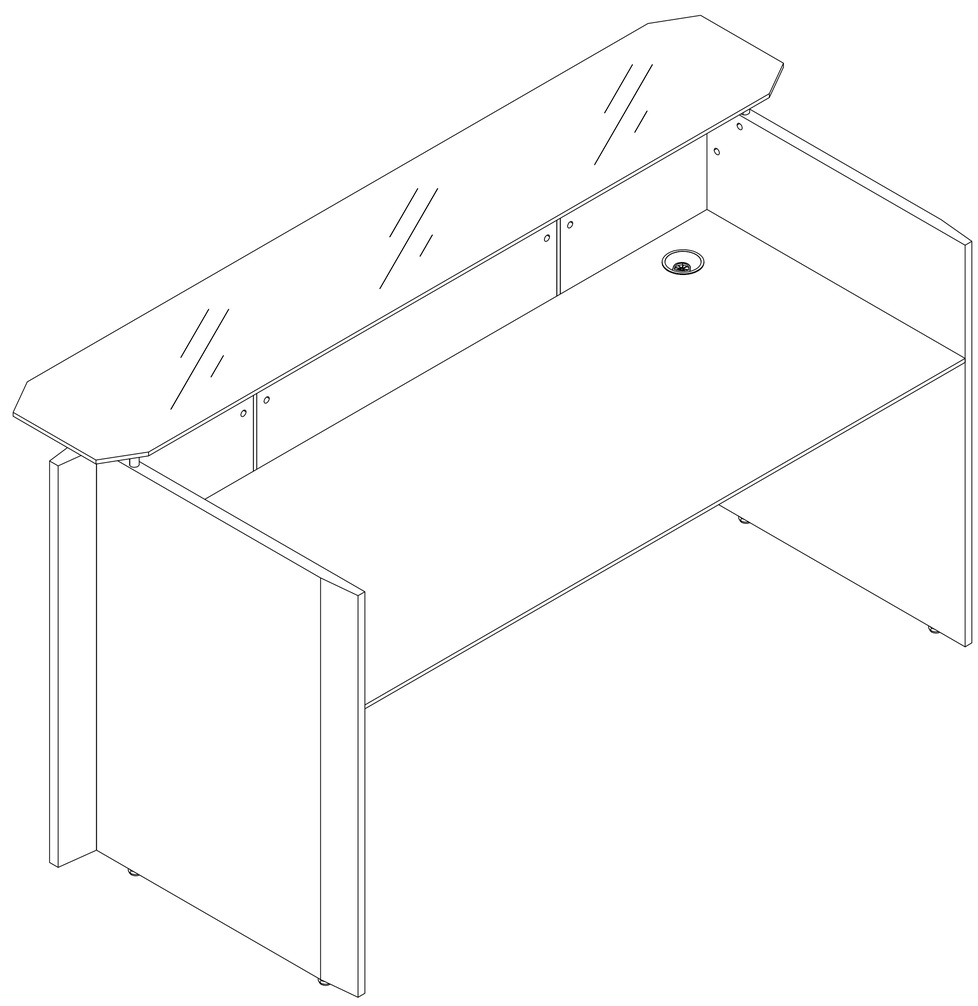
COMPLETED