SPACE®
SEATING

818-41G9C18P / 818-31G9C18P / 818-11G9C18P
818-41R9C18R / 818-41P9C1A8
MATREX BACK MANAGER'S CHAIR
OPERATING INSTRUCTIONS



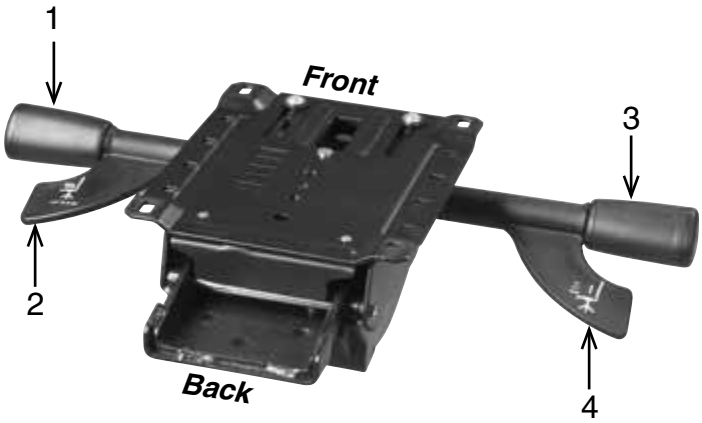

FEATURES

- **BACKREST LOCKING ADJUSTMENT**
  Turn knob (1) clockwise to lock backrest in position, to unlock, turn knob (1) counter-clockwise and lean back to release anti-kick back mechanism.
- **SEAT SLIDER**
  Lift lever (2) to slide seat, release lever (2) when desired position is reached.
- **TILT TENSION ADJUSTMENT**
  Turn knob (3) clockwise to increase tilt tension and turn knob (3) counter-clockwise to decrease tilt tension.
- **SEAT HEIGHT ADJUSTMENT**
  To raise seat height, remove pressure from seat and lift lever (4) up. To lower seat height, sit on chair and lift lever (4) up.

NOTE: It is normal for chair to slightly lower under body weight.

- **ARM HEIGHT ADJUSTMENT**
  To adjust arm height, push button (5) in to allow the arms to move up or down freely. Release button (5) once the desired height is reached.

WARNING

1. Use this product only one person at a time.
2. Do not use this chair unless all bolts screws and knobs are securely tightened.
3. Check that all bolts screws and knobs are tight every three months or as needed.
4. Do not overturn back tilt knob when decreasing tension.
5. Dispose of packing material properly. Do not use plastic cover as head covering. It may cause suffocation.
6. Do not use chair as a stepladder.
7. Use this chair for its intended purpose only.
8. Use mild detergent only for cleaning.

LIMITED WARRANTY

SPACE® chairs are warranted from the date of purchase against failure due to material and workmanship as follows:*

- Lifetime on component parts including pneumatic cylinder, control mechanism, base and casters.
- 3 Years on upholstery fabric and foam against wear and deterioration.
- Leather is not warranted against routine scratching and scuffing, as leather is subject to minor blemishes in use.

**All warranties are limited to the original purchaser for normal commercial usage defined as a standard forty hour work week by persons weighing 250 lbs. or less. This warranty will not cover labor, freight or damage from misuse, abuse, negligence, alteration, accident, vandalism, rusting, acts of nature or any other event beyond the control of Office Star Products. The warranty does not cover cosmetic damage that may result from normal use. Liability for incidental or consequential damages is excluded. The user assumes all risk of injury resulting from use of this product. When usage is more than 40 hours per week, a five year warranty on all parts applies. Fabric is warranted for one year.* This warranty gives you specific legal rights, and you may also have other rights which vary from state to state.

To make a warranty claim, contact Parts Department via e-mail **parts@officestar.net**, by Fax 1-909-930-5629, or toll free parts number 1-800-950-7262, Monday through Friday 8:00 a.m. - 5:00 p.m. Pacific Time. Provide model number and description of the problem and obtain confirmation number. At it's option Office Star Products will:
(a) Supply compatible components of current manufacture.
(b) Repair the customer's component.

It is the customer's responsibility to prepay freight on any components returned to the factory. Return freight on components covered by warranty will be paid by Office Star Products.

OFFICE STAR® PRODUCTS

SPACE SEATING®

818-41G9C18P / 818-31G9C18P / 818-11G9C18P
818-41R9C18R / 818-41P9C1A8
MATREX BACK MANAGER'S CHAIR
ASSEMBLY INSTRUCTIONS

STEP 1

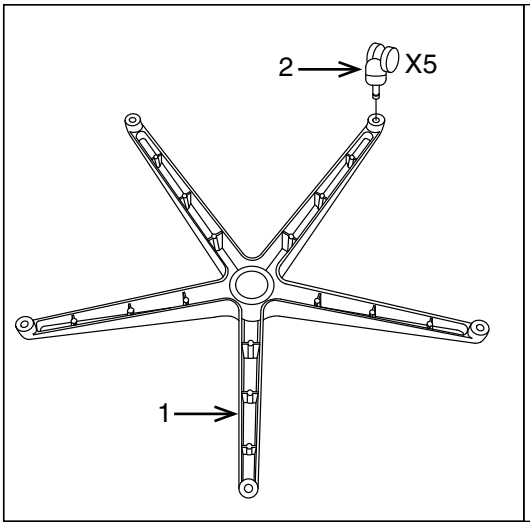

STEP 2

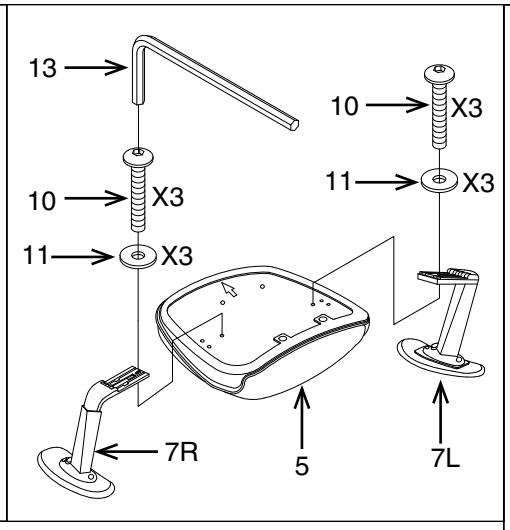

STEP 3

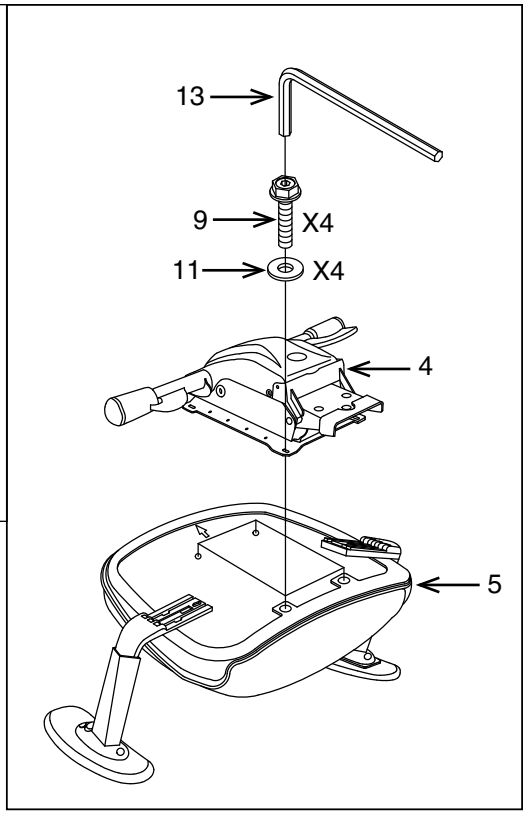

STEP 4

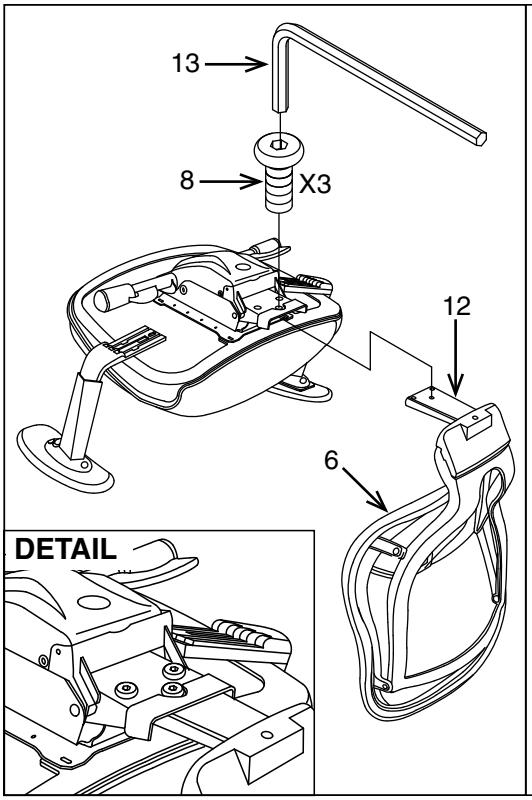

STEP 5

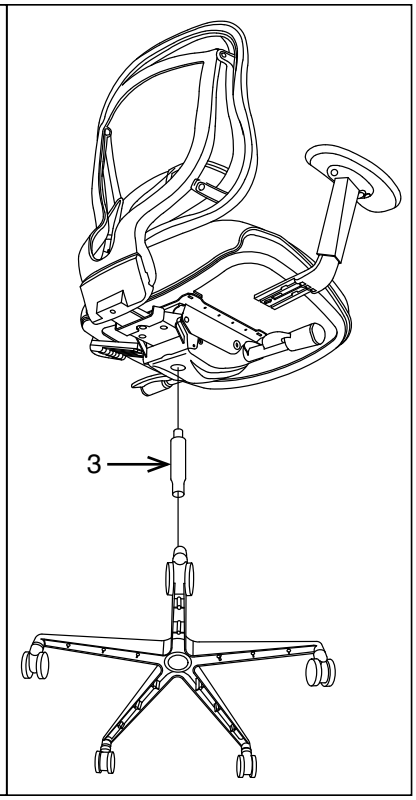

PART	QTY
1. Base	1
2. Casters	5
3. Pneumatic Cylinder	1
4. Seat Plate	1
5. Seat Cushion	1
6. Back Assembly	1
7. Arms (7L & 7R)	2
8. Back Support Screw	3
9. Seat Plate Screw	4
10. Arm Screw	6
11. Flat Washer	10
12. Back Support (pre-installed)	1
13. Allen Wrench	1

Remove all parts from carton, separate by part numbers indicated on parts list, and verify part quantities.

STEP 1 Insert five Casters (2) into Base (1), push hard until you feel or hear the Caster (2) snap into place.

STEP 2 Align the holes in the Arms (7L & 7R) with the holes in the Seat Cushion (5), attach Arms (7L & 7R) to Seat Cushion (5) using three Arm Screws (10) and three Flat Washers (11) for each Arm. **FULLY TIGHTEN ALL ARM SCREWS (10) USING ALLEN WRENCH (13).**

STEP 3 Attach Seat Plate (4) to Seat Cushion (5) with the arrow towards the front of the chair, secure using four Flat Washers (11) and four Seat Plate Screws (9), **FULLY TIGHTEN ALL SEAT PLATE SCREWS (9) USING ALLEN WRENCH (13).**

STEP 4 Attach Back Support (12) to rear of Seat Plate (4) using three Back Support Screws (8), **SEE DETAIL.**
FULLY TIGHTEN ALL BACK SUPPORT SCREWS (8) USING ALLEN WRENCH (13).

STEP 5 Insert Pneumatic Cylinder (3) into Base (1), Place assembled seat on top of Pneumatic Cylinder (3) and apply downward pressure.

ATTENTION: MAKE SURE ALL SCREWS ARE FULLY TIGHTENED BEFORE USING CHAIR.

© Office Star Products May 2010