National Business Furniture

Assembly Instructions
For New Castle Wood Benches

Tools required: Rubber mallet (Standard hammer is not recommended)

Note: These instructions are intended for various models and configurations. Your benches may not look exactly as those shown in the diagrams.

Important: The assembly process requires all interlocking wedge hardware be kept loose until later in the sequence. Once all parts are properly connected, it is then safe to tighten and secure hardware. Follow these instructions closely to ensure your product remains strong and stable for many years of use.

Weight Capacity: All benches in this series have a weight capacity of 275 lbs. per seat, unless otherwise stated.

Single Bench

1. Unpack and identify all parts.
2. This bench is held together by use of ***interlocking wedge*** hardware, as shown in figure 1.
3. Attach the seat cushion to one leg frame by aligning the interlocking wedges and sliding them together simultaneously, as shown in figure 2. **Important: Keep these wedge connections loose for now.**
4. Repeat step 3 to attach the second leg frame to the seat cushion. Keep these connections loose for now as well.
5. With the bench upright on a level surface, use your hands to apply pressure to the seat cushion a little at a time. You should feel the wedges slide together and tighten.
6. With scrap cardboard or other protective material over the fabric, use a rubber mallet (not a standard hammer) to gently tap the seat cushion until the interlocking wedges are "locked" together.

   Important: Wedges are correctly "locked" when the inner wedge comes into contact with the top flap of the outer wedge, and the bottom edges align, as shown in figure 3. Avoid excessive force or damage to the wedges may occur.
7. Wedge connections must be visually inspected before use to ensure all are correctly set and locked.
8. Your bench is now assembled and ready to use.

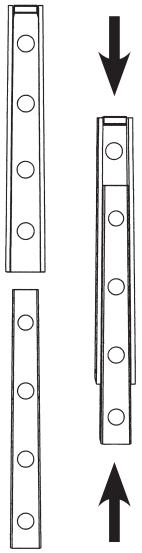

Figure 1

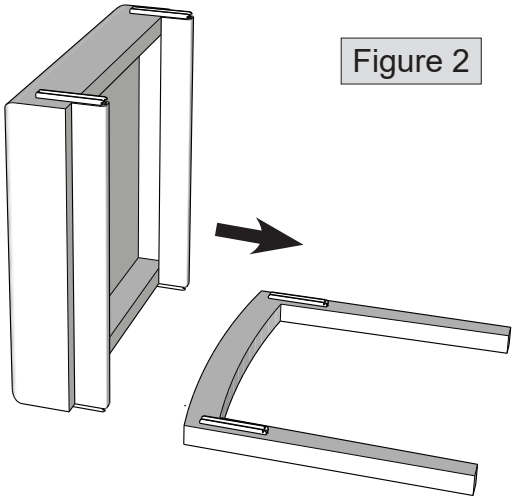

Figure 2

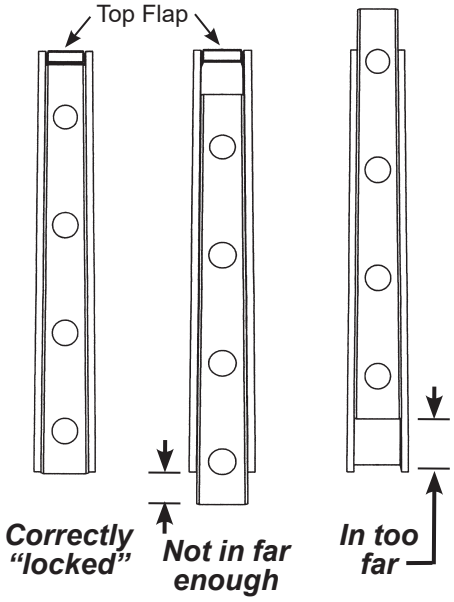

Figure 3

TROUBLESHOOTING TIP: If bench does not sit level on the floor, check that all wedges are correctly "locked," as shown in figure 3.

Thank you for purchasing this NBF product!
Need assistance with parts or assembly? Call 800.275.7545

© 2026 National Business Furniture, LLC

Sep 2026

National Business Furniture

Assembly Instructions
For New Castle Wood Benches

Tools required: Rubber mallet (Standard hammer is not recommended)

Note: These instructions are intended for various models and configurations. Your benches may not look exactly as those shown in the diagrams.

Important: The assembly process requires all interlocking wedge hardware be kept loose until later in the sequence. Once all parts are properly connected, it is then safe to tighten and secure hardware. Follow these instructions closely to ensure your product remains strong and stable for many years of use.

Weight Capacity: All benches in these series have a weight capacity of 275 lbs. per seat, unless otherwise stated.

Multi-Seat Benches

1. Unpack and identify all parts. Center legs have wedge hardware on both sides. End legs have wedge hardware on one side only.
2. These benches are held together by use of ***interlocking wedge*** hardware, as shown in figure 1 on opposite side of this sheet.
3. Start with one end leg frame to assemble the first bench and follow steps 3 and 4 on the opposite side of this sheet. I**mportant: keep all wedge hardware connections loose for now.**
4. Continue attaching seat cushions and leg frames until entire set is assembled. **Again, keep all wedge hardware connections loose.**
5. Once all seat cushions and leg frames have been connected, place entire assembly upright on a level surface.
6. Use your hands to apply downward pressure to each seat cushion a little at a time. You should feel the wedges slide together and tighten.
7. With scrap cardboard or other protective material over the fabric, use a rubber mallet (not a standard hammer) to gently tap the seat and back cushions until the interlocking wedges are "locked" together. Refer to figure 3 on opposite side of this sheet.

   Important: Wedges are correctly "locked" when the inner wedge comes into contact with the top flap of the outer wedge, and the bottom edges align, as shown in figure 3. Avoid excessive force or damage to the wedges may occur.
8. Wedge connections must be visually inspected before use to ensure all are correctly set and locked.
9. Your benches are now assembled and ready to use.

TROUBLESHOOTING TIP: If benches do not sit level on the floor, check that all wedges are correctly "locked" as shown in figure 4 on opposite side of this sheet.

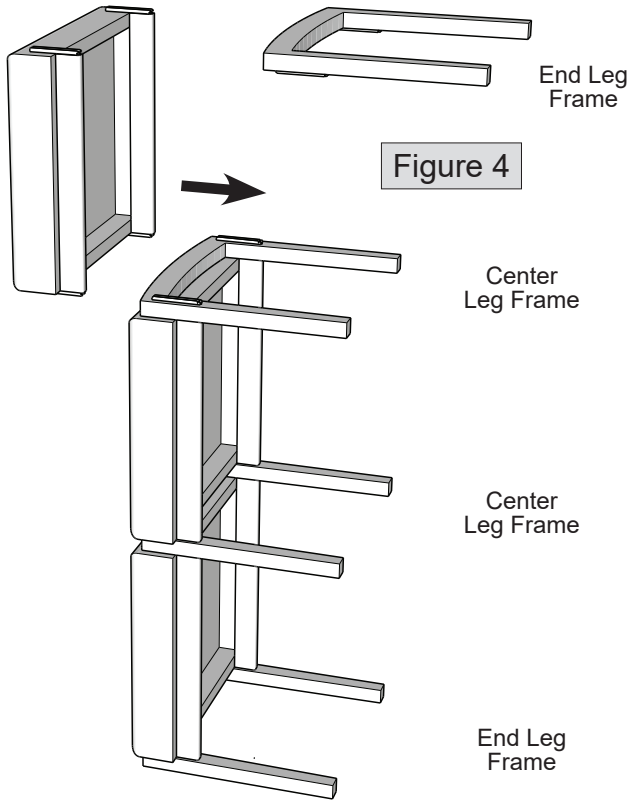

Figure 4

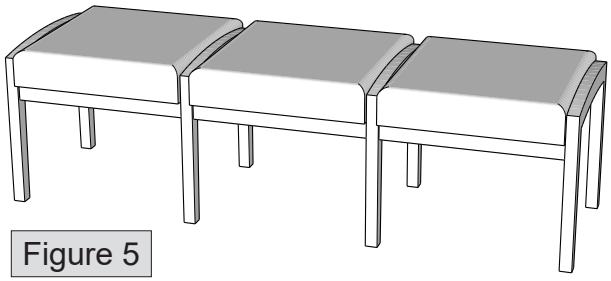

Figure 5

Thank you for purchasing this NBF product!
Need assistance with parts or assembly? Call 800.275.7545

© 2026 National Business Furniture, LLC