Assembly Instructions

36" Bookcase

hubbub

Components

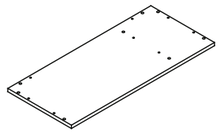

A Top panel **(1)**

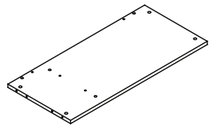

B Shelf panel **(1)**

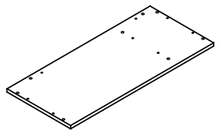

C Bottom panel **(1)**

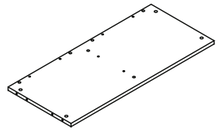

D Left side panel**(1)**

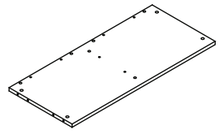

E Right side panel **(1)**

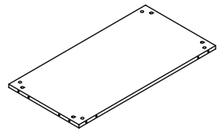

F Upper back panel **(1)**

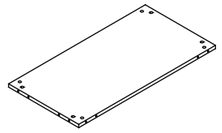

G Lower back panel **(1)**

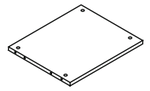

H Divider panel **(2)**

I Leg **(4)**

Hardware/Tools

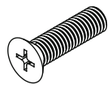

J Screw M 6*15 **(16)**

K Cam bolt **(36)**

L Cam lock **(36)**

M Wood dowel **(36)**

N Adhesive cover **(36)**

! Tools Required for Assembly

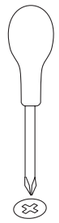

Phillips Screwdriver

1

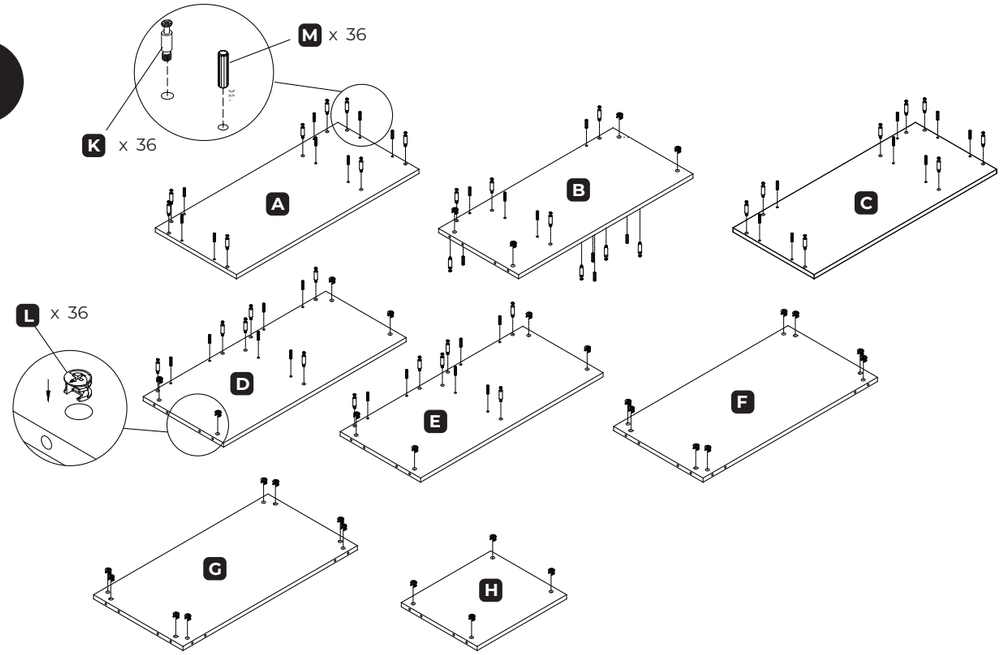
M x 36
K x 36
A
B
C
L x 36
D
E
F
G
H

2

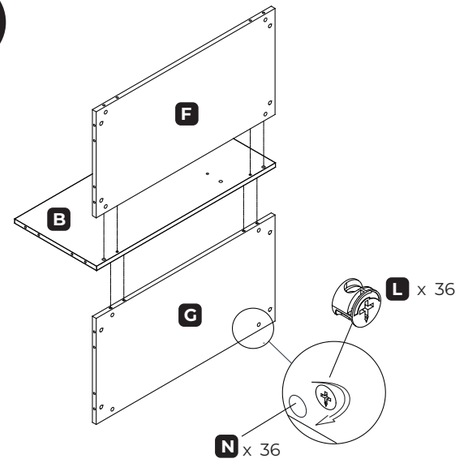
F
B
G
L x 36
N x 36

3

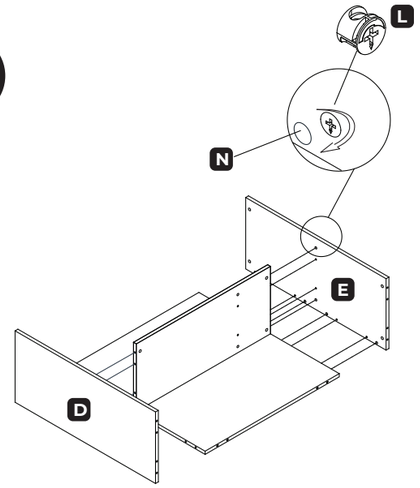
L
N
E
D

4

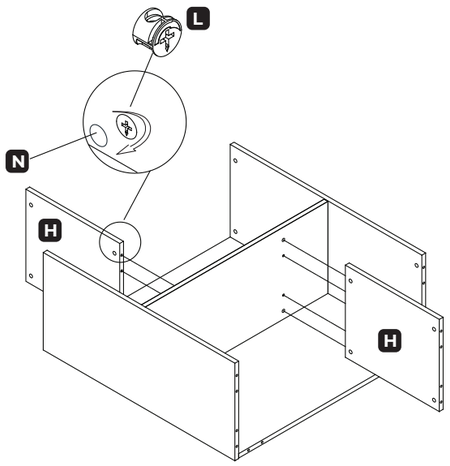
L
N
H
H

5

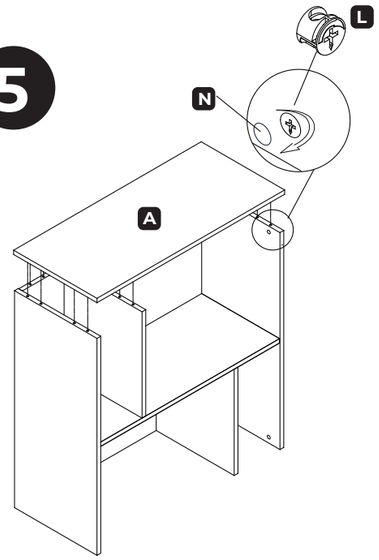
L
N
A

6

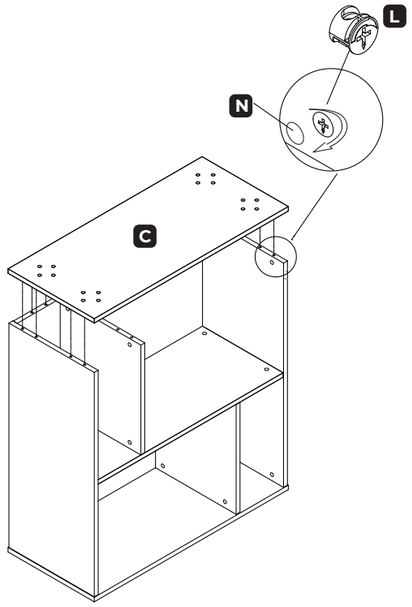
L
N
C

7

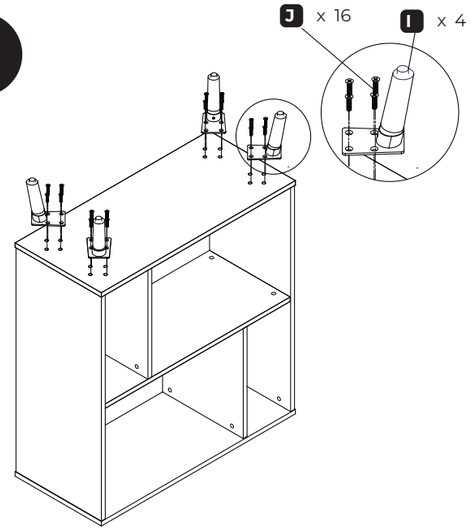
J x 16
I x 4