National Business Furniture

Rivet- 72" Hutch

Dimensions

Product Name	Rivet- 72" Hutch
MFG Code	CFD

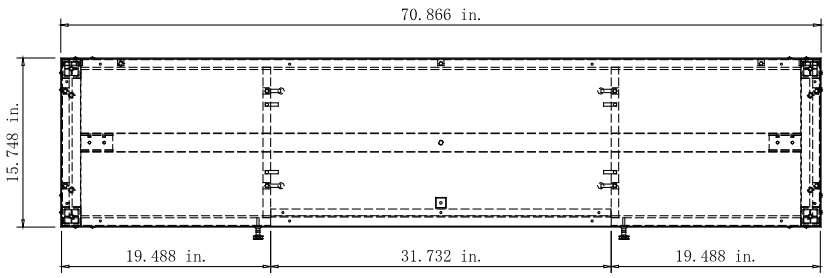

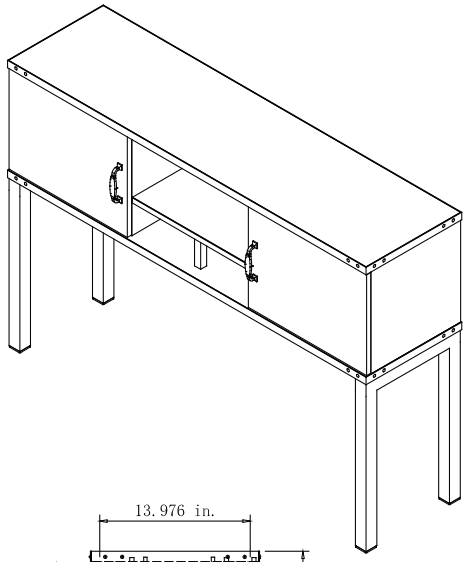

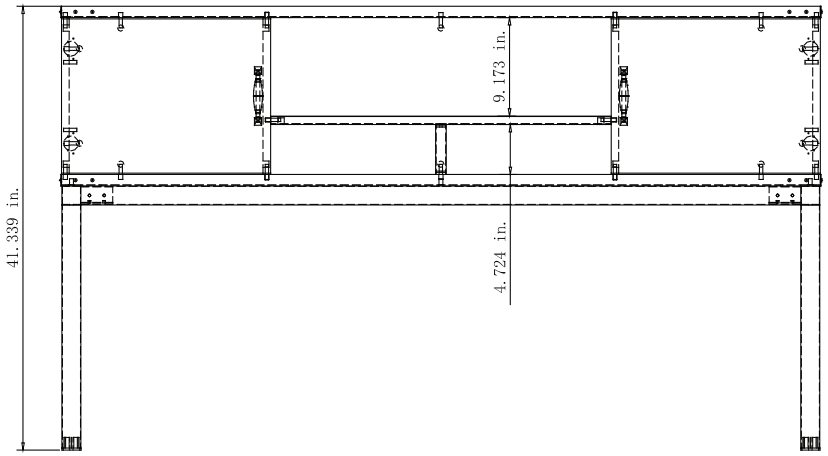

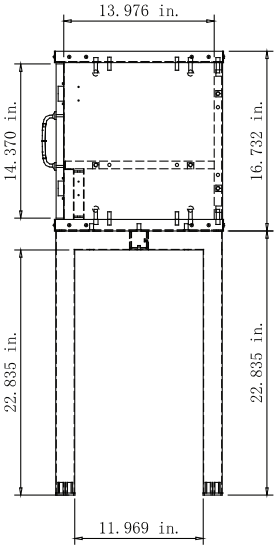

National Business Furniture

Rivet- 72x24" Top And Base

Dimensions

Product Name	Rivet- 72x24" Top And Base
MFG Code	CFD

