National Business Furniture

Rivet- 60/72" Hutch

Assembly Instructions

COMPONENTS

(A) Top -1pc

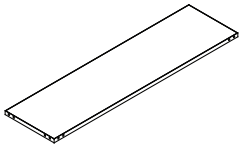

(B) Left side panel -1pc

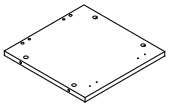

(C) Right side panel -1pc

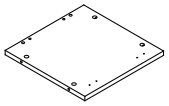

(D) Back panel -1pc

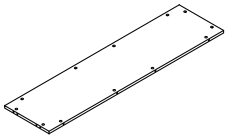

(E) Bottom- 1pc

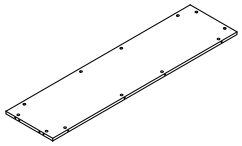

(F) Left center panel- 1pc

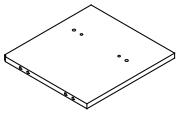

(G) Right center panel- 1pc

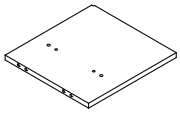

(H) Fixed panel - 1pc

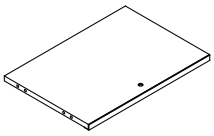

(I) Door- 2pcs

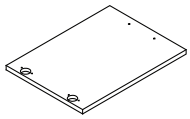

(J) Left frame - 1pc

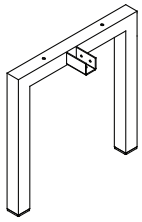

(K) Right frame - 1pc

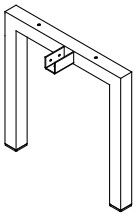

(L) Support bar - 1pc

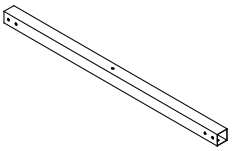

HARDWARE & TOOLS

(M) Cam bolt - 32pcs



(N) Cam lock - 32pcs



(O) Wood dowel - 16pcs



(P) Adhesive cover - 34pcs



Tools Required for Assembly



Philips Screw Driver

(Q) Full cover hinge - 4pcs

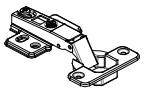

(R) Screw M4*16 - 24pcs



(S) Handle - 2pcs

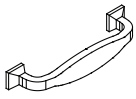

(T) Screw M4*22 - 4pcs



(U) Door bumper - 2pcs



(V) Screw M6*12 - 8pcs



(W) Screw M6*40 - 2pcs

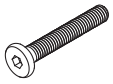

(X) Screw M6*60 - 5pcs

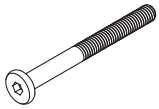

(Y) Allen Key - 1pc

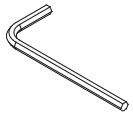

(Z) Support bar - 1pc

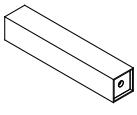

National Business Furniture

Rivet- 60/72" Hutch

Assembly Instructions

INSTRUCTIONS

STEP 1

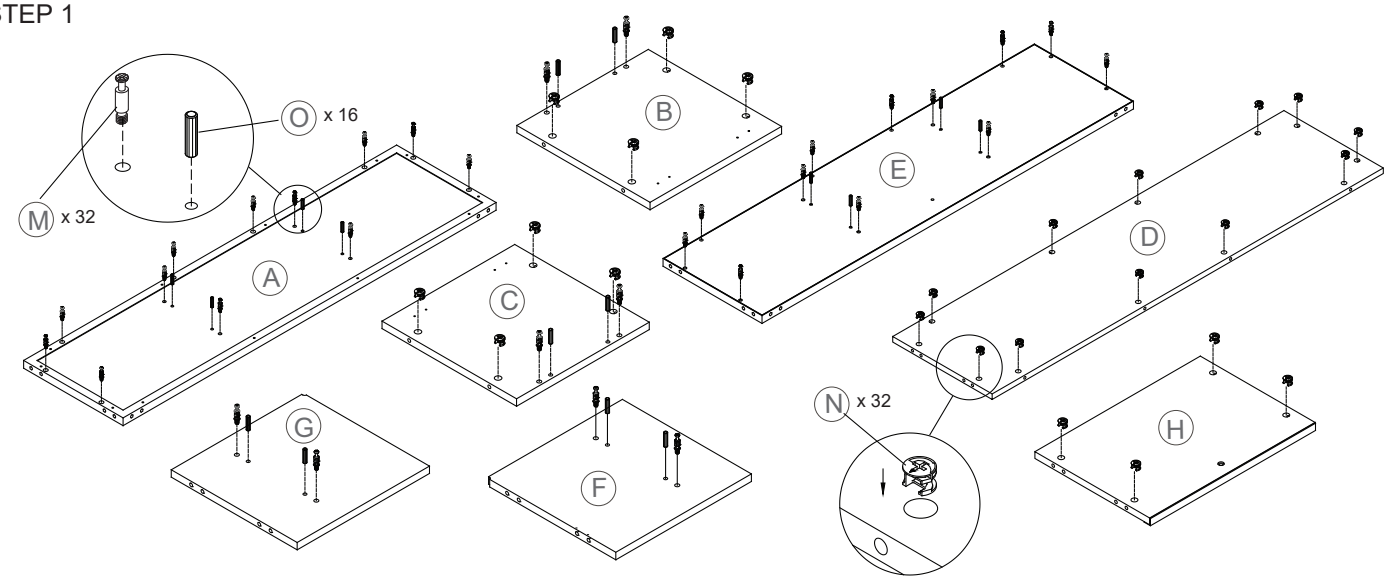

STEP 2

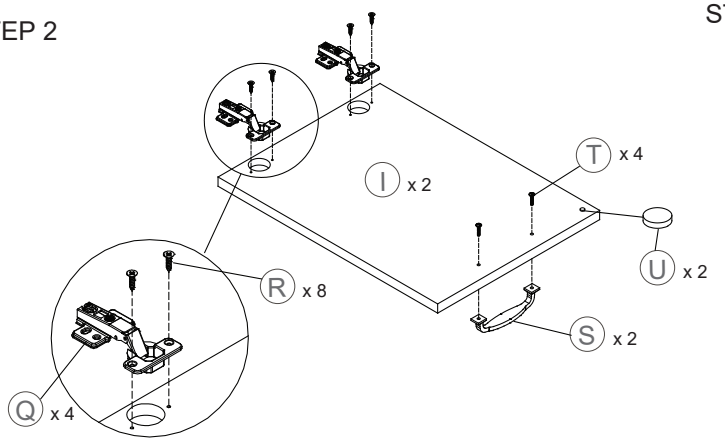

STEP 3

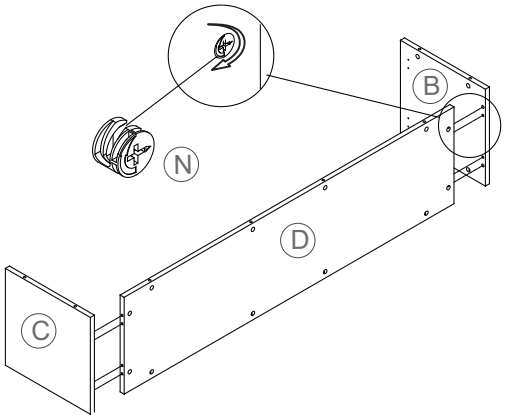

STEP 4

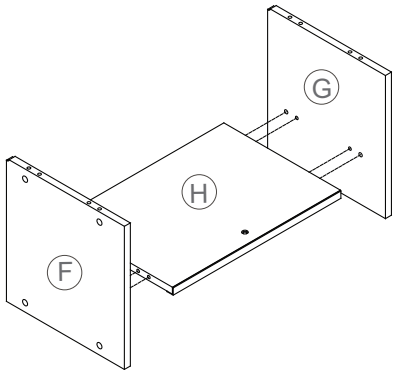

STEP 5

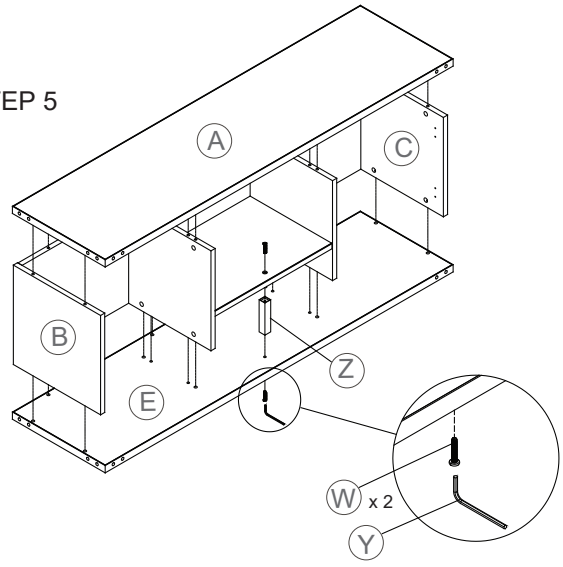

National Business Furniture

Rivet- 60/72" Hutch

Assembly Instructions

INSTRUCTIONS

STEP 6

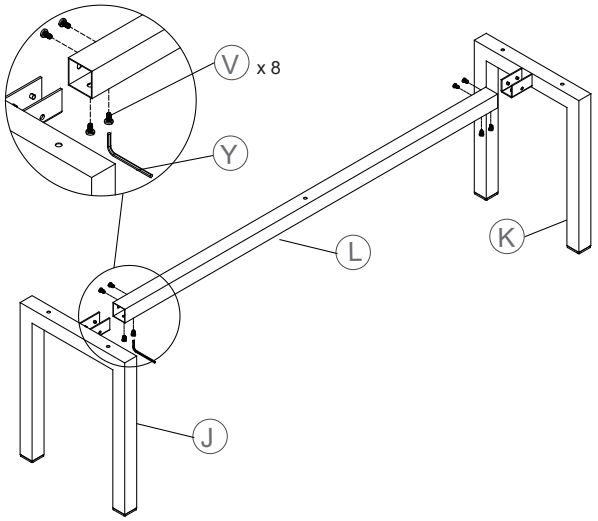

STEP 7

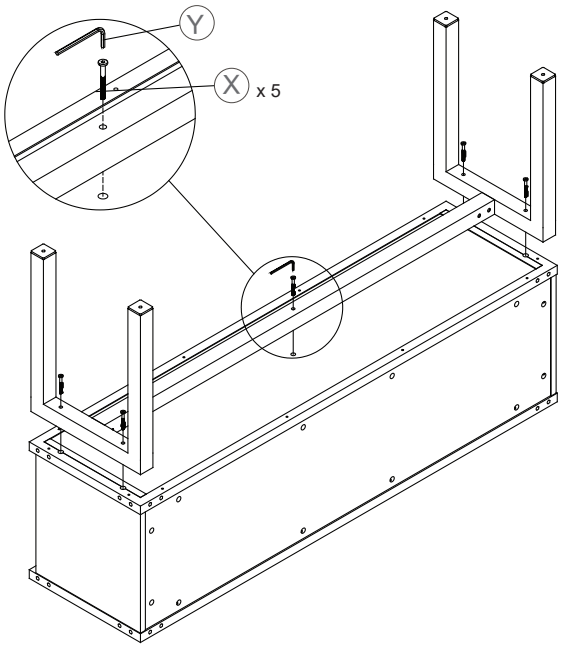

STEP 8

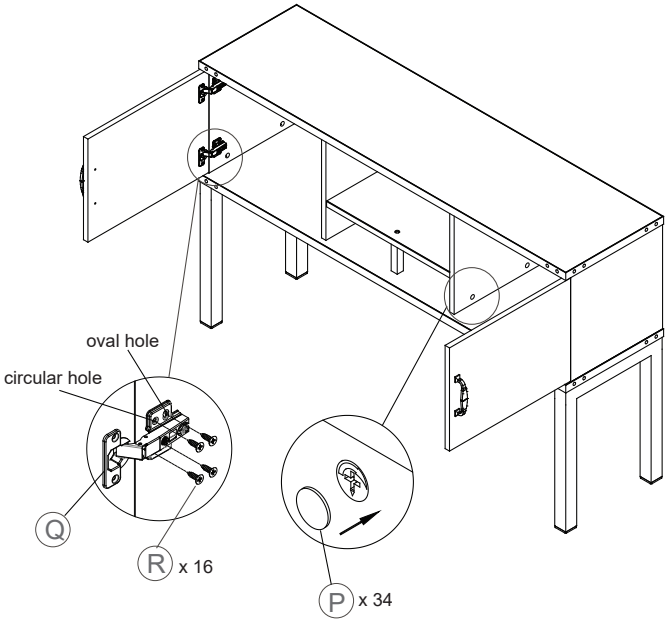

STEP 9

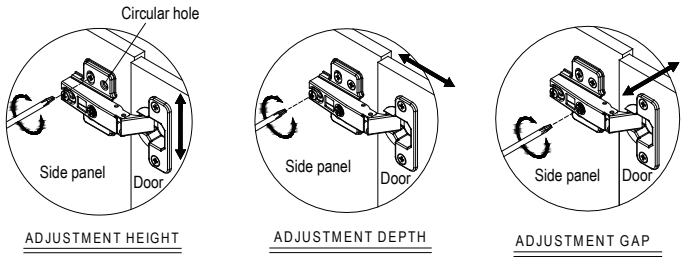

Once height adjustment is complete, insert screw (R) into the circular hole to attach the hinge.

National Business Furniture

Rivet- 60/66/72" Top And Base

Assembly Instructions

COMPONENTS

(A) Top -1pc

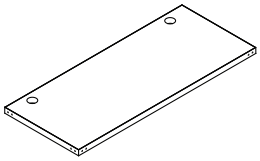

(B) Baffle -1pc



(C) Support Bar- 2pcs

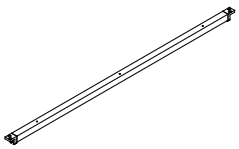

(D) Left Frame -1pc

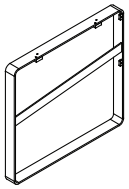

(E) Right Frame -1pc

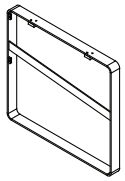

HARDWARE & TOOLS

(F) Screw M6*20 - 8pcs



(G) Screw M6*30 - 4pcs

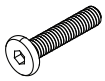

(H) Screw M6*57 - 6pcs

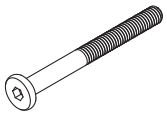

(I) Adjustable Glide - 4pcs

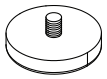

Tools Required for Assembly

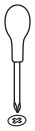

Philips Screw Driver

(J) Allen Key - 1pc

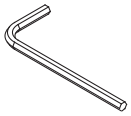

(K) Grommet - 2pcs



INSTRUCTIONS

STEP 1

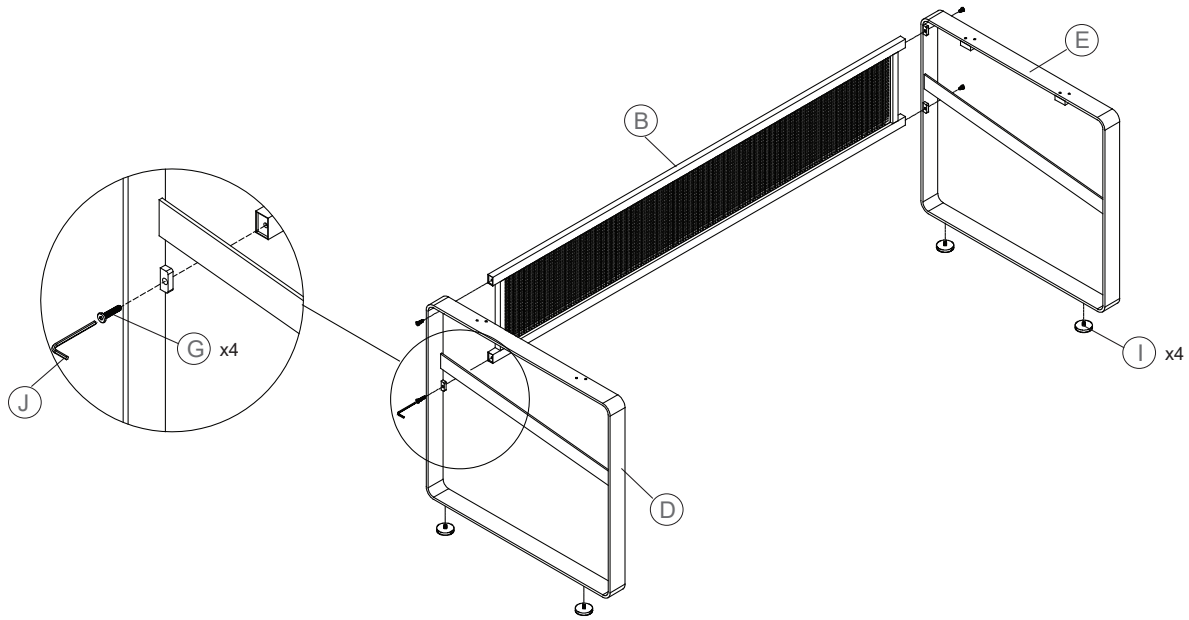

National Business Furniture

Rivet- 60/66/72" Top And Base

Assembly Instructions

INSTRUCTIONS

STEP 2

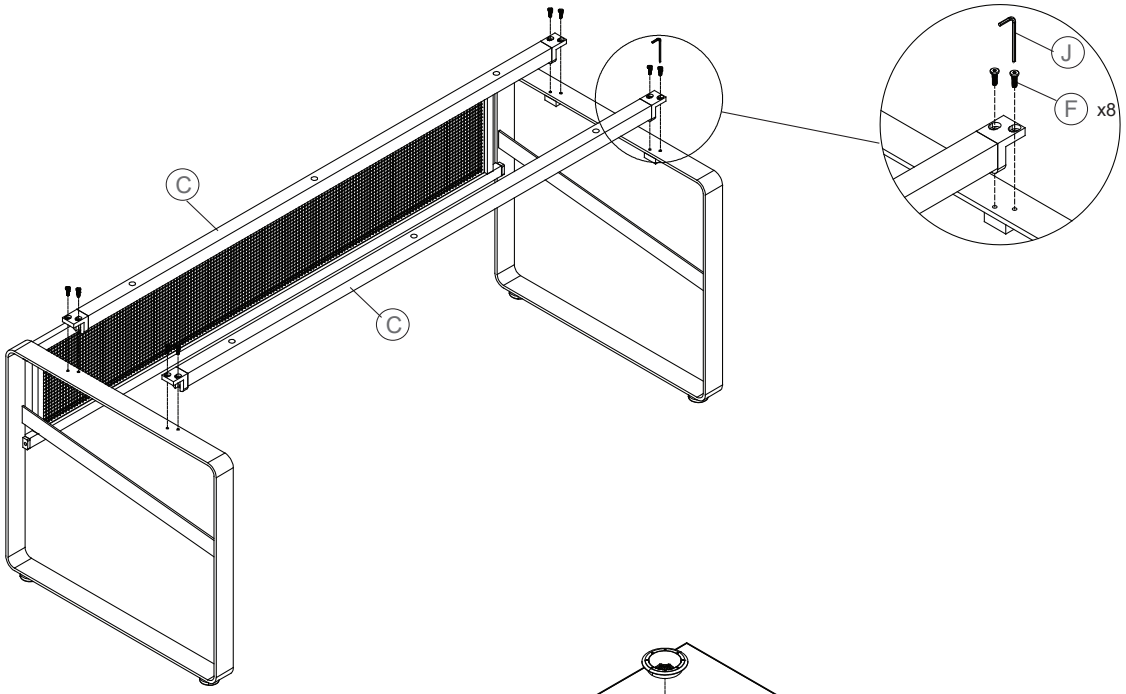

STEP 3

