National Business Furniture

At Work- Storage Cabinet 42" H

Assembly Instructions

COMPONENTS

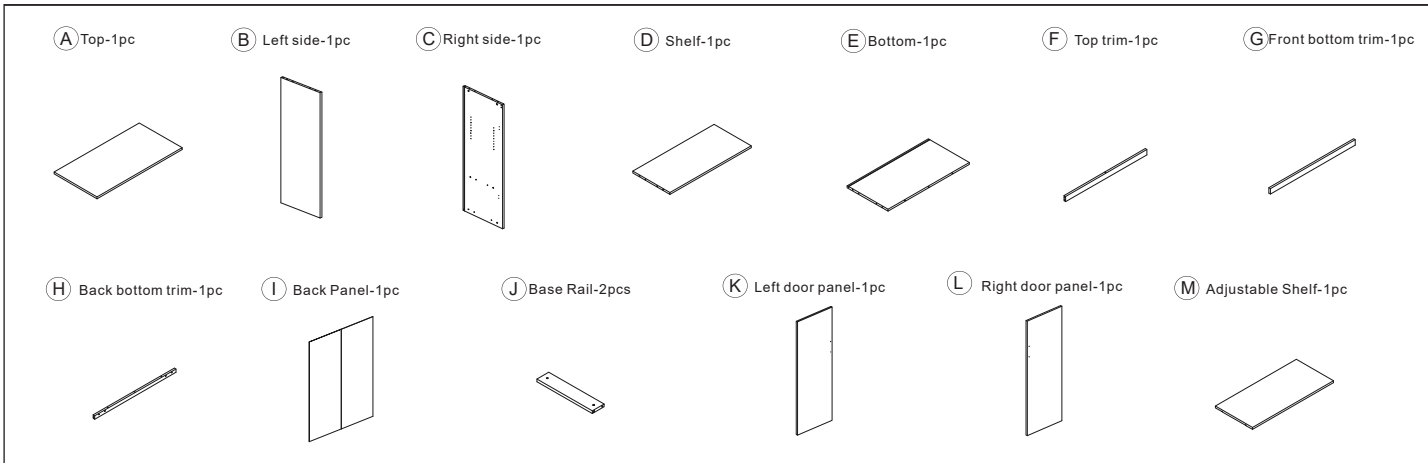

HARDWARE & TOOLS

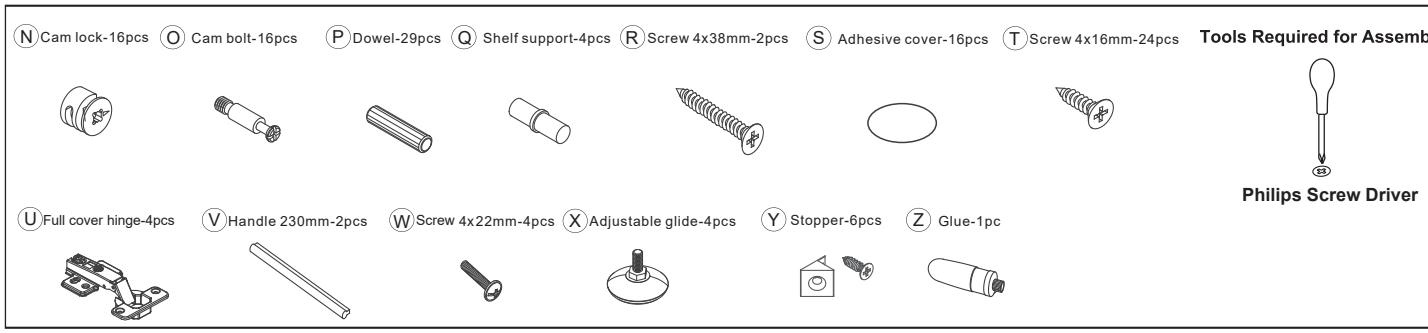

INSTRUCTIONS

STEP 1

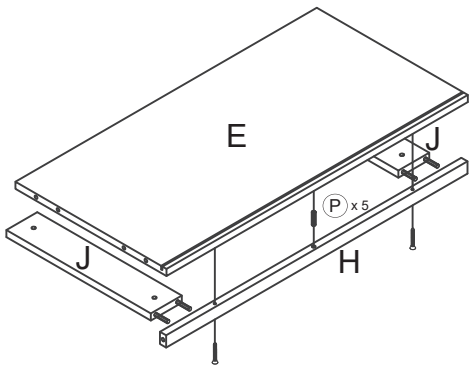

STEP 2

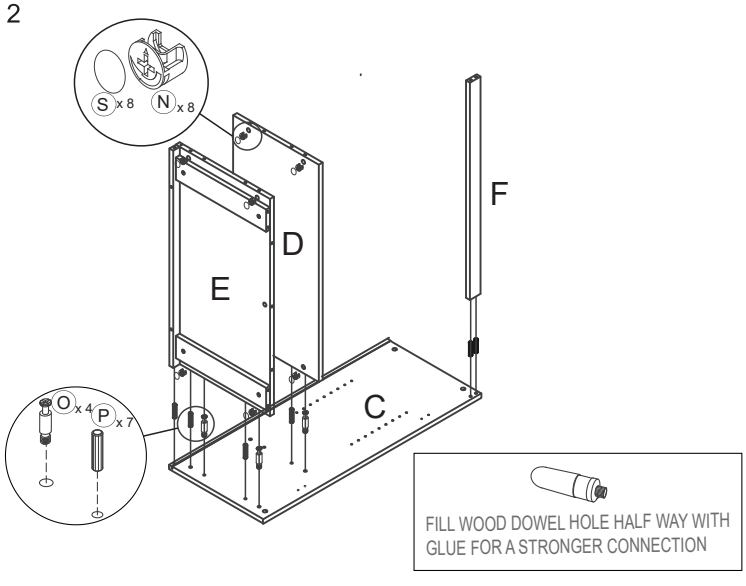

National Business Furniture

At Work - Storage Cabinet 42" H

Assembly Instructions

INSTRUCTIONS

STEP 3

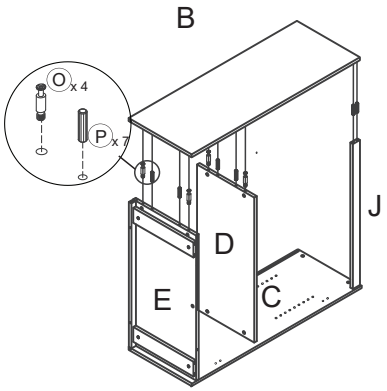

STEP 4

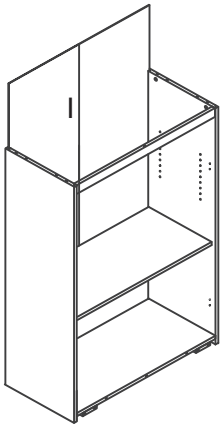

STEP 5

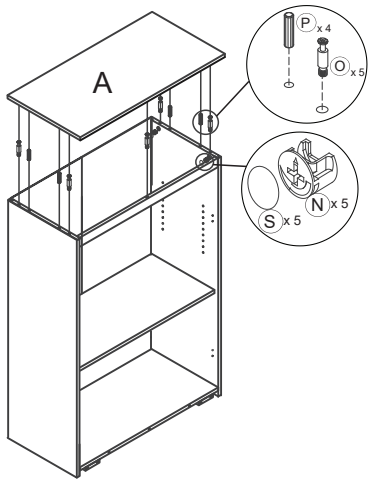

STEP 6

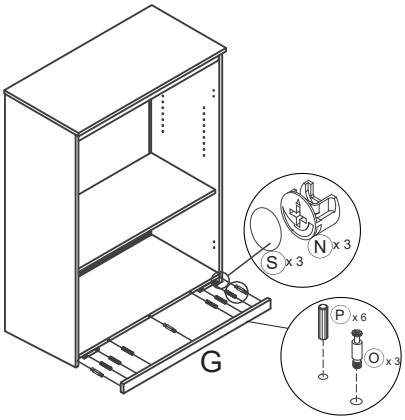

STEP 7

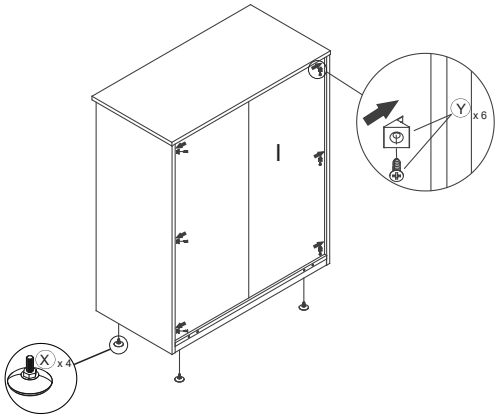

STEP 8

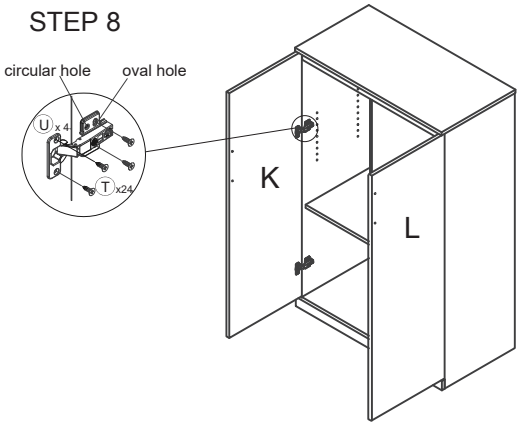

STEP 9

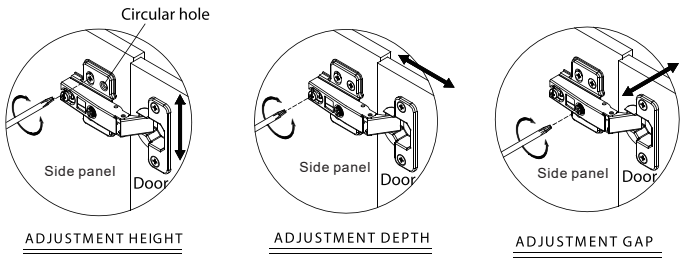

When adjustment height is OK, Then use screw T to fix the hinge in the circular hole

National Business Furniture

At Work - Storage Cabinet 42" H

Assembly Instructions

INSTRUCTIONS

STEP 10

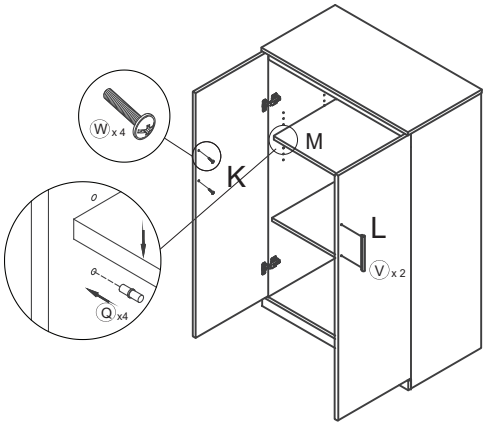

COMPLETED

