National Business Furniture

At Work- Pedestal Storage Cabinet

Assembly Instructions

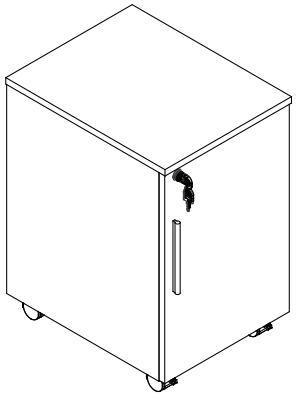

HARDWARE & TOOLS

Ⓐ Caster with lock-2pcs



Ⓑ Caster-2pcs



Ⓒ Screw 4x16mm-16pcs



Ⓓ Shelf support-8pcs



Ⓔ Key-1set



Tools Required for Assembly



Philips Screw Driver

INSTRUCTIONS

STEP 1

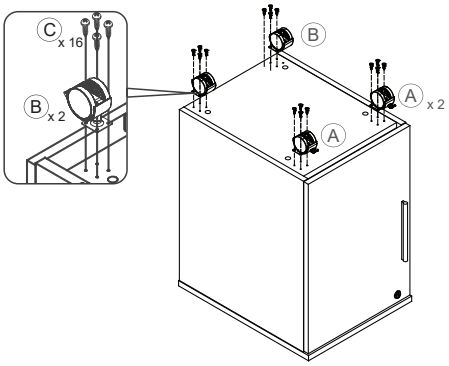

STEP 2

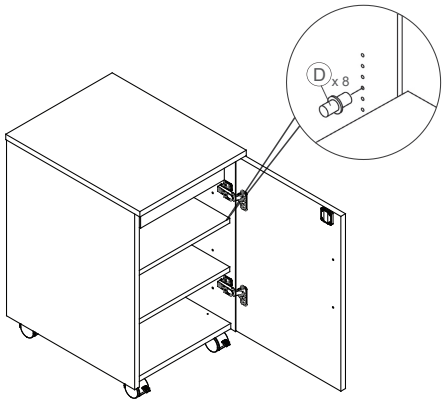

COMPLETED

