National Business Furniture

At Work- Open Frame Bookcase

Assembly Instructions

COMPONENTS

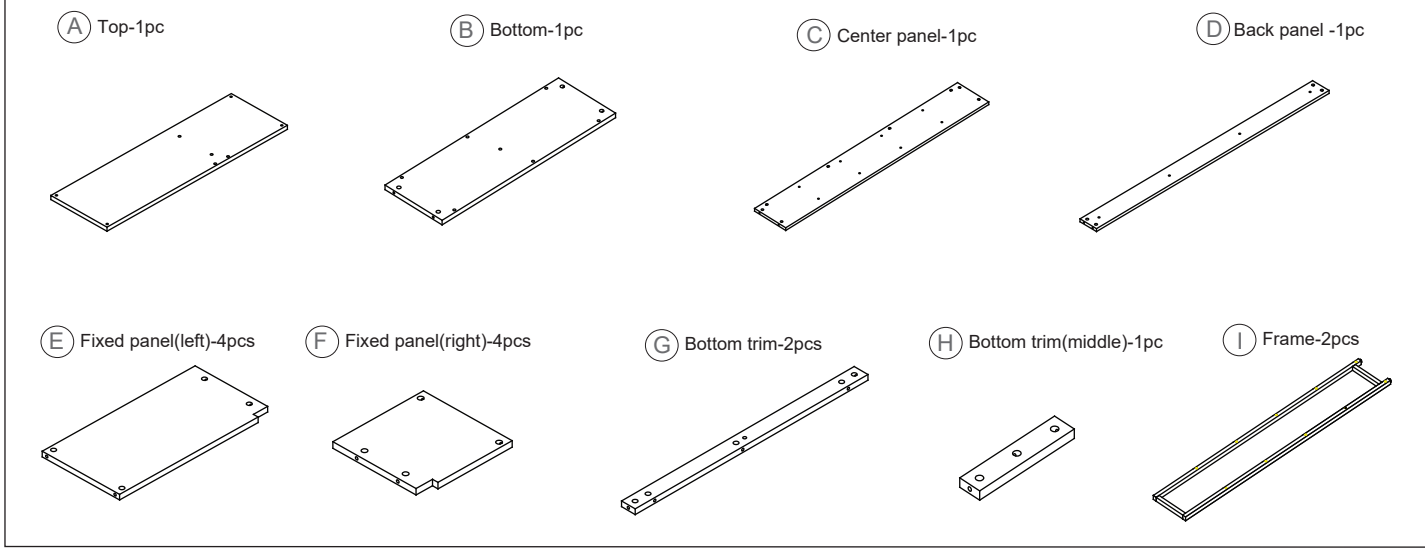

HARDWARE & TOOLS

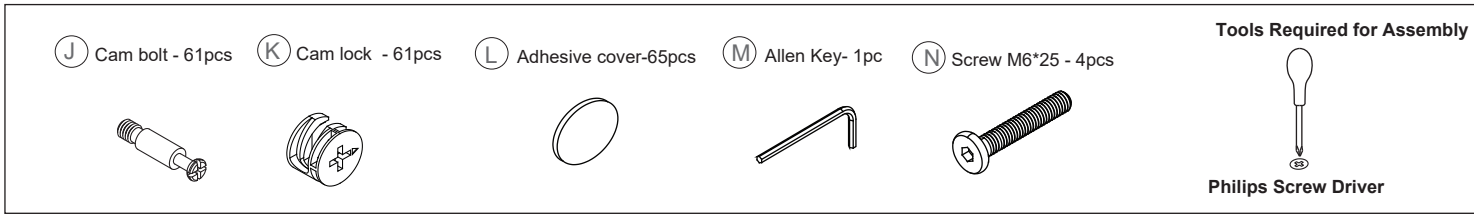

INSTRUCTIONS

STEP 1

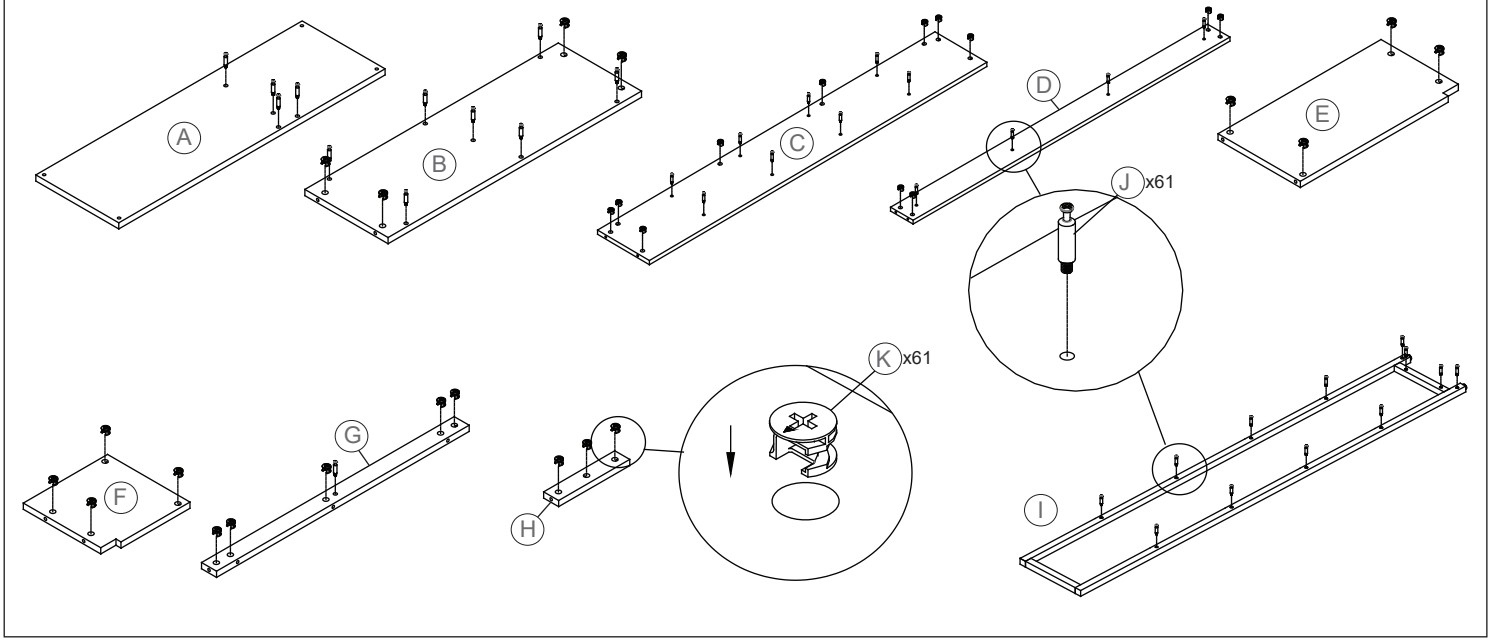

National Business Furniture

At Work- Open Frame Bookcase

Assembly Instructions

INSTRUCTIONS

STEP 2

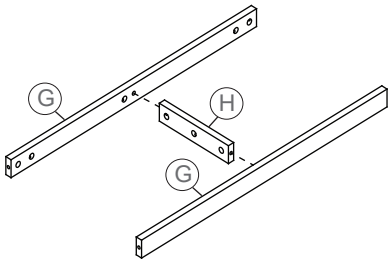

STEP 3

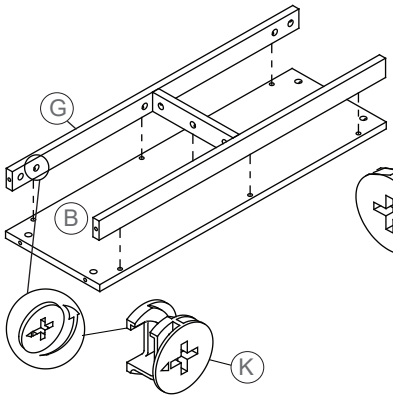

STEP 4

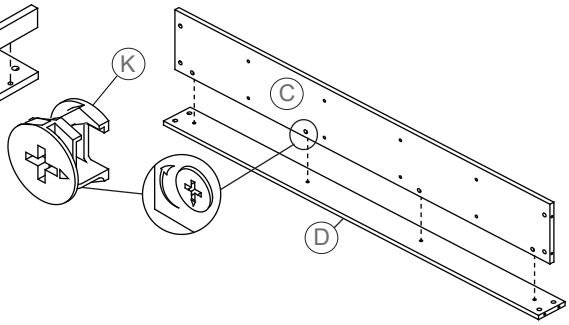

STEP 5

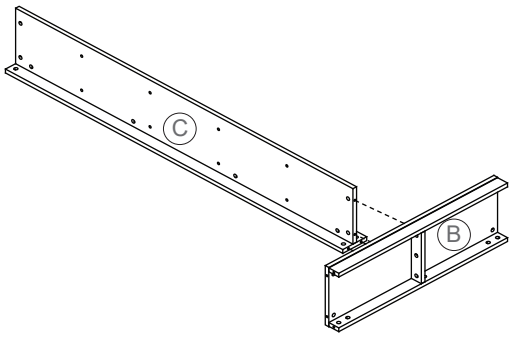

STEP 6

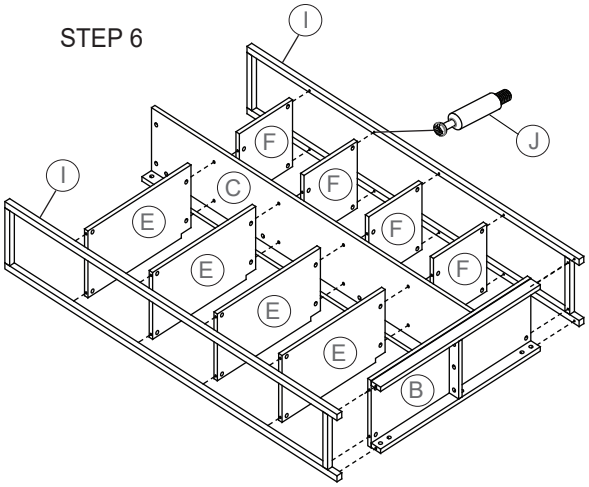

STEP 7

