National Business Furniture

Rivet-48"*24"/60"*24" Straight Adjustment Desk

Assembly Instructions

COMPONENTS

(A) Desk TOP -1pc (B) Support Beam-1set (C) Lifting Leg - 2pcs (D) Foot - 2pcs (E) Bracket- 2pcs (F) Control Box- 1pc (G) Display- 1pc

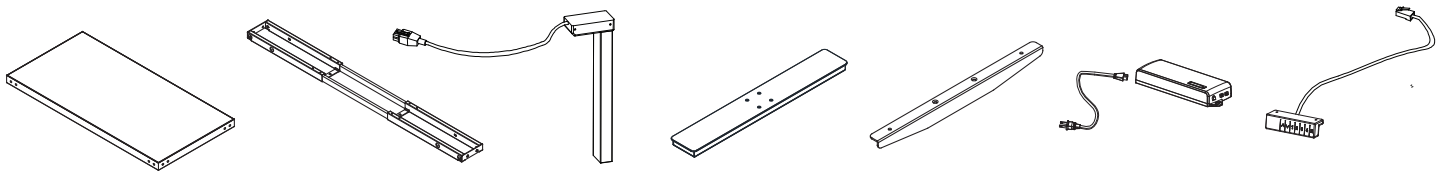

HARDWARE & TOOLS

(H) Adjustable Glide - 4pcs (I) Screws M8*16mm - 8pcs (J) Screws M6*14mm - 8pcs (K) Screws M6*10mm - 4pcs (L) Screws M6*12mm - 8pcs



Tools Required for Assembly

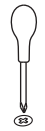

Philips Screw Driver for Parts N and O

(M) Rubber Cushion - 6pcs (N) Screws 3.5*19- 2pcs (O) Screws 4.8*19- 8pcs (P) Allen Key(4mm) - 1pc (Q) Allen Key(5mm) - 1pc



INSTRUCTIONS

STEP 1

Loosen the 4 screws of beam using Allen Key(4mm), adjust the beam to proper position to fit the Desk Top. (According to the predrilled holes on the TOP,see STEP 5)

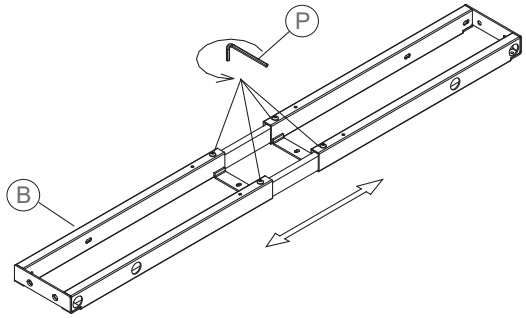

STEP 2

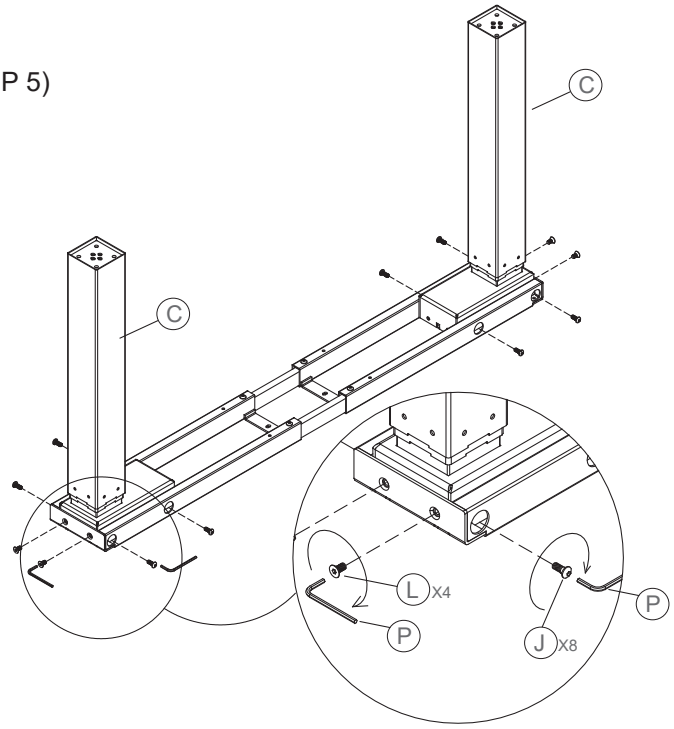

National Business Furniture

Rivet-48"*24"/60"*24" Straight Adjustment Desk

Assembly Instructions

INSTRUCTIONS

STEP 3

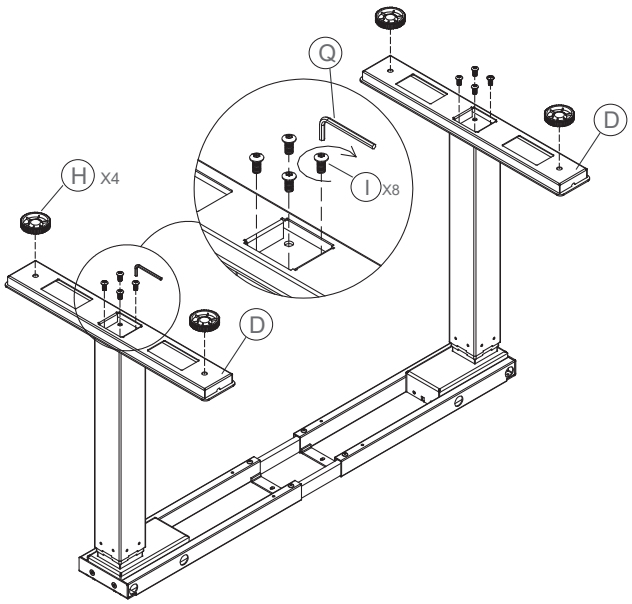

STEP 4

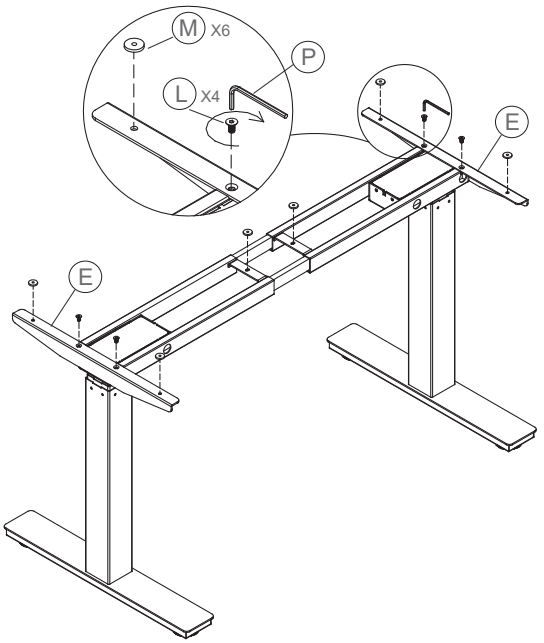

STEP 5

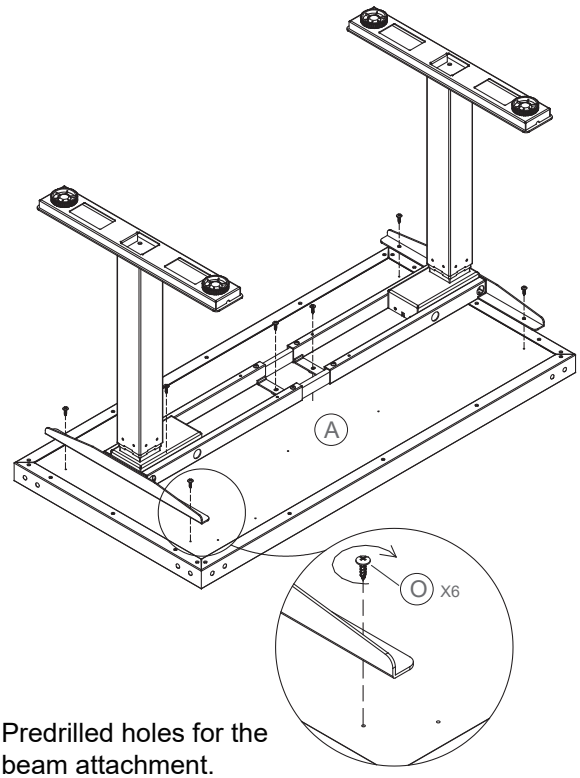

Predrilled holes for the beam attachment.

STEP 6

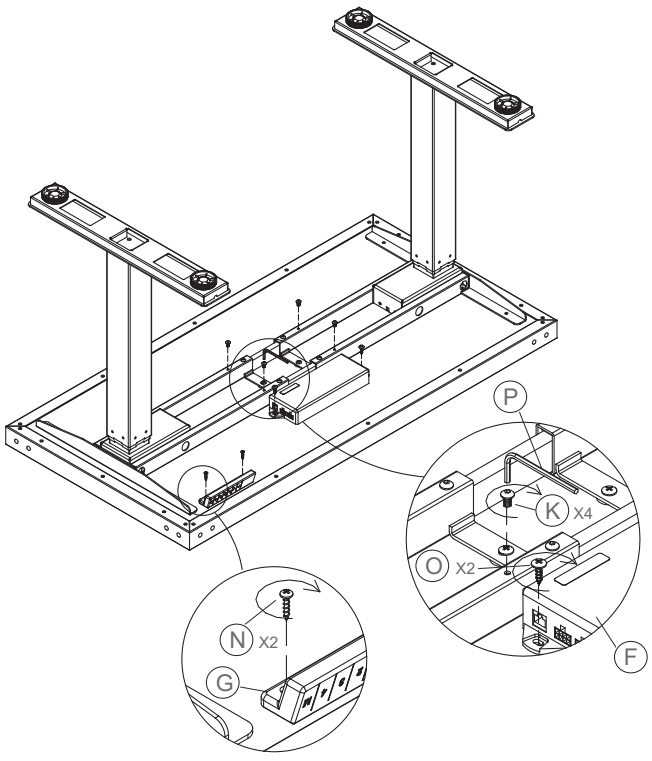

National Business Furniture

Rivet-48"*24"/60"*24" Straight Adjustment Desk

Assembly Instructions

INSTRUCTIONS

STEP 7

Connect the control box to the handset and to the motor.

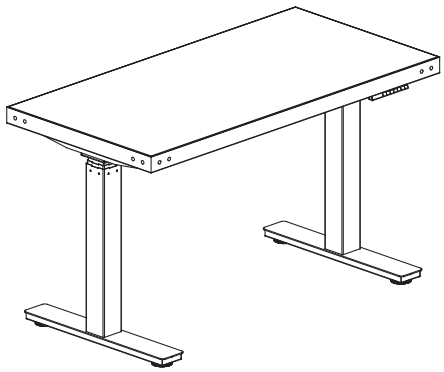

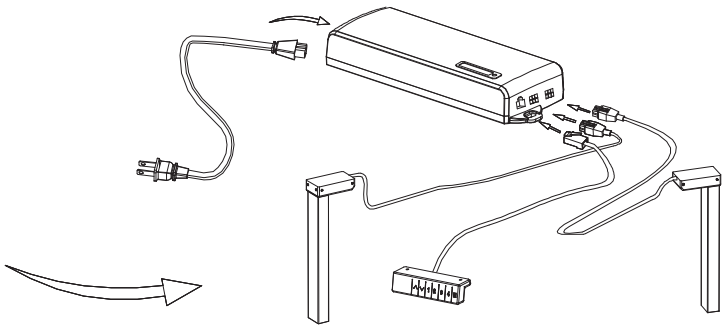

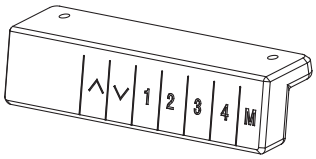

Operation Guide

1.Normal Operation

Adjust the desk to the desired height by pressing and holding the "∧" or "∨" button.

2.Setting the Memory Function

When the desk is at the desired height, press and hold the "M" button until the display flashes.Then press "1" to set position one. Repeat this procedure for up to four desired settings. These settings are saved in the device's memory, and will remain even if the desk is unplugged.

3.System Initialization and Reset

To reset the system, press and hold both the "∧" and "∨" buttons at the same time. After a moment, the desk will begin to lower. Wait until the desk reaches its lowest point, indicated by a beep. The system memory is now cleared and reset.

4.Display Format

To change the display from centimeters to inches, press and hold the "1", "2", and "M" buttons at the same time for 5 seconds.The display will flash "C-E". Within 5 seconds, press the 1 key for centimeters, or press the 2 key for inches. If this procedure does not work, reset the system and try again.

5.Normal Maintenance

Save wrenches and tighten screws/bolts every 6 months.

6.Notice

1.This product should only be used within its technical parameters, for its intended use.
2.This system should be kept dry and away from corrosive gas.
3.Avoid rapid, repeated stress on adjustment motor.
4.Always use two people to lift and move this desk.
5.Max weight limit:233.2 lbs .

National Business Furniture

Rivet- Mobile Box/File Pedestal

Assembly Instructions

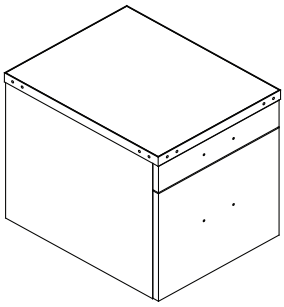

HARDWARE & TOOLS

A	B	C	D	Tools Required for Assembly
Caster - 5pcs	File Clip - 2pcs	Metal Bar-300mm - 1pc	Screw M4.5*16 - 20pcs	Philips Screw Driver

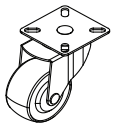

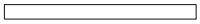



INSTRUCTIONS

STEP 1

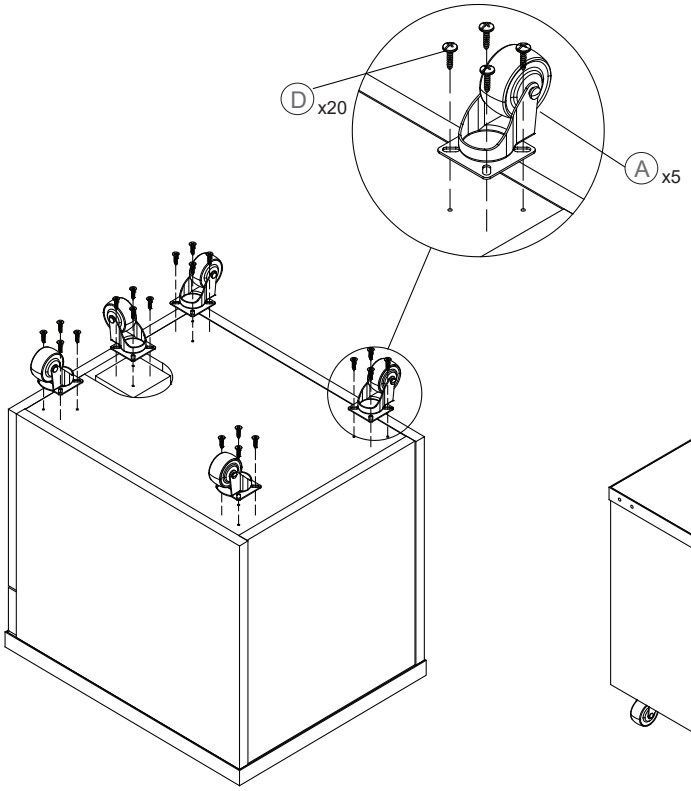

STEP 2

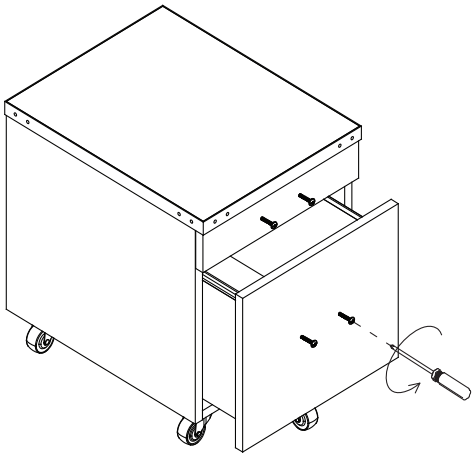
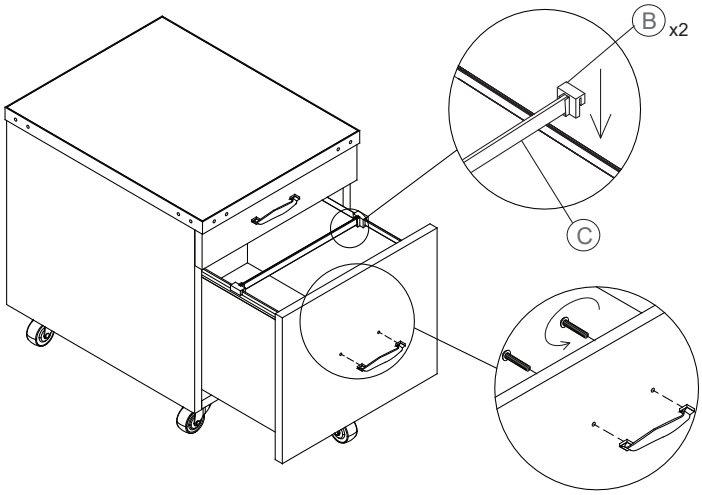

National Business Furniture

Rivet- Wardrobe

Assembly Instructions

COMPONENTS

Ⓐ Adjustable Shelf -1pc

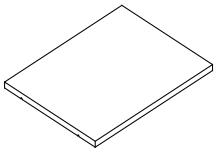

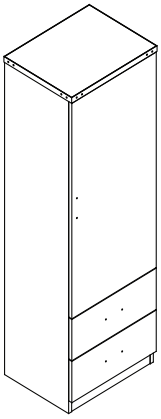

HARDWARE & TOOLS

Ⓑ Adjustable Glide - 4pcs



Ⓒ Shelf Support - 4pcs



Tools Required for Assembly

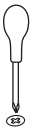

Philips Screw Driver

INSTRUCTIONS

STEP 1

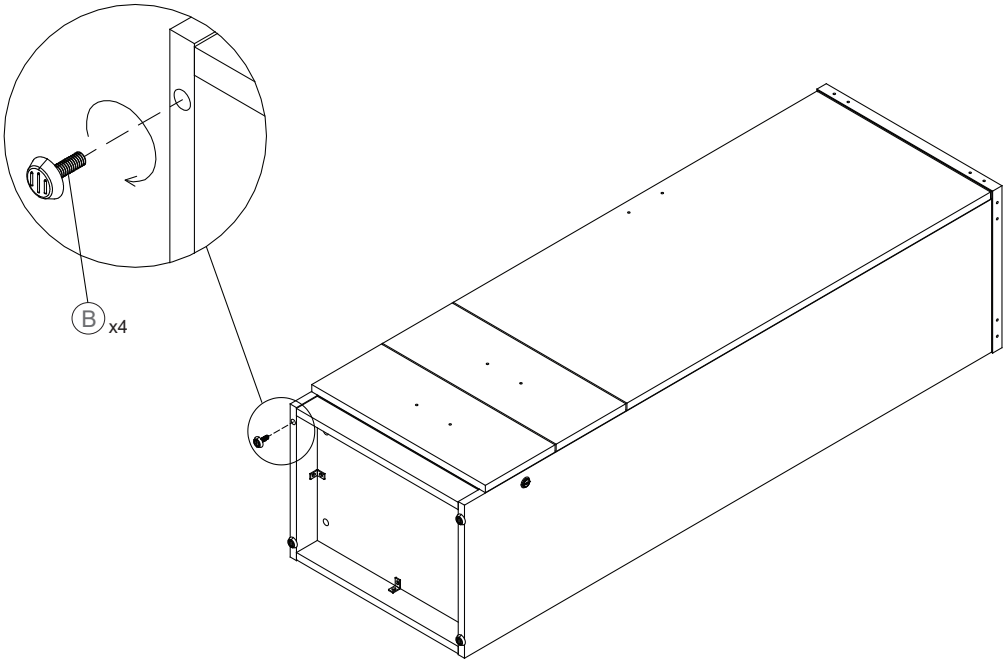

National Business Furniture

Rivet- Wardrobe

Assembly Instructions

INSTRUCTIONS

STEP 2

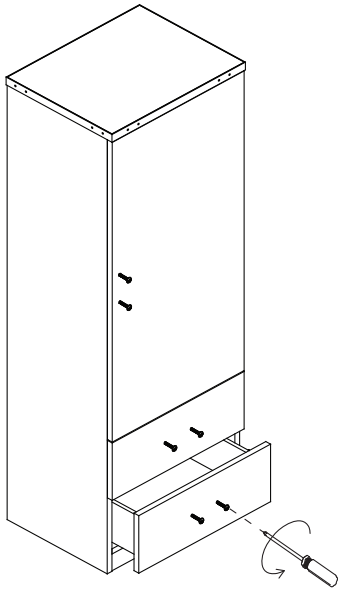

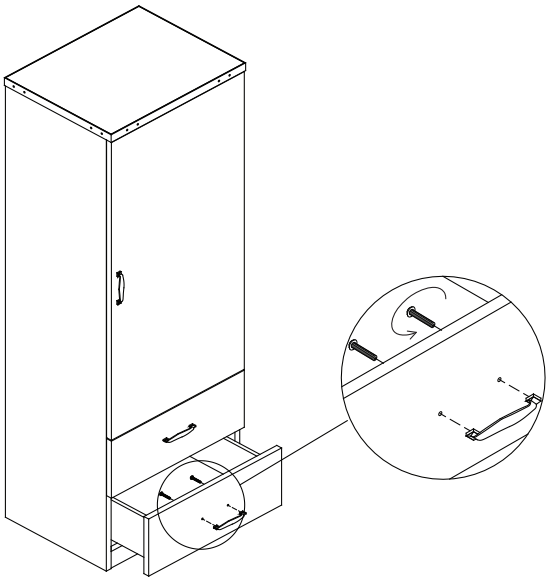

STEP 3

