INSTALLATION AND MAINTENANCE INSTRUCTIONS

RPGE/X*E713 SERIES UNITS

RESIDENTIAL PACKAGED UNITS

Gas/Electric
508687-02
09/2026

THIS MANUAL MUST BE LEFT WITH THE HOMEOWNER FOR FUTURE REFERENCE

Table of Contents

Unit Dimensions 5
Roof Curb Dimensions 7
Adjustable Roof Curb Dimensions.....9
Installation 12
Venting.....16
Duct System 17
Filters.....17
Condensate Drain.....17
Gas Piping.....18
Electrical Wiring 19
Heating Start-Up 20
Operation.....22
Maintenance.....23
Refrigerant Detection System.....26
Decommissioning.....31

⚠ WARNING

Improper installation, adjustment, alteration, service, or maintenance can cause injury or property damage. Refer to this manual. For assistance or additional information, consult a licensed professional (or equivalent), HVAC installer, service agency, or the gas supplier.

⚠ WARNING

Do not store combustible materials, including gasoline and other flammable vapors and liquids, near the unit, vent pipe, or warm air ducts. Such actions could cause property damage, personal injury, or death.

This unit is designed for use with R-454B refrigerant only.

INTERTEK ETL CM C US LISTED

PFAS

Allied Air Enterprises LLC
215 Metropolitan Drive
West Columbia, SC 29170

(P) 508687-02

⚠ CAUTION

The installation of the unit, wiring, warm air ducts, venting, etc. must conform to the requirements of the National Fire Protection Association; the National Fuel Gas Code, ANSI Z223.1 (latest edition) and the National Electrical Code, ANSI/NFPA No. 70 (latest edition) in the United States; the Canadian Installation Codes CAN/CGA-B149.1 & .2 (latest edition) and the Canadian Electrical Code Part 1, CSA 22.1 (latest edition) in Canada; and any state or provincial laws, local ordinances, or local gas utility requirements. Local authorities having jurisdiction should be consulted before installation is made. Such applicable regulations or requirements take precedence over the general instructions in this manual.

Save these instructions for future reference

⚠ WARNING

The maximum altitude is 4500 ft (1372 m) with no modifications to the gas system. The maximum altitude is 10,000 ft (3200 m).

⚠ WARNING

Every working procedure that affects safety means shall only be carried out by competent persons. This appliance is not to be used by persons (including children) with reduced physical, sensory or mental capabilities, or lack of experience and knowledge, unless they have been given supervision or instruction concerning use of the appliance by a person responsible for their safety. Children should be supervised to ensure they do not play with the appliance.

⚠ WARNING

Improper installation, adjustment, alteration, service or maintenance can cause property damage, personal injury or loss of life. Installation and service must be performed by a licensed professional HVAC installer or equivalent, service agency, or the gas supplier.

⚠ CAUTION

Servicing shall be performed only as recommended by the manufacturer.

⚠ IMPORTANT

The Clean Air Act of 1990 bans the intentional venting of refrigerant (CFCs, HCFCs and HFCs) as of July 1, 1992. Approved methods of recovery, recycling or reclaiming must be followed. Fines and/or incarceration may be levied for noncompliance.

⚠ WARNING

Ducts connected to an appliance shall not contain a potential ignition source.

⚠ WARNING

For appliances using A2L refrigerants connected via an air duct system to one or more rooms, only auxiliary devices approved by the appliance manufacturer or declared suitable with the refrigerant shall be installed in connecting ductwork.

⚠ CAUTION

Leak Detection System installed. Unit must be powered except for service.

⚠ WARNING

- Do not use means to accelerate the defrosting process or to clean, other than those recommended by the manufacturer.
- The appliance shall be stored in a room without continuously operating ignition sources (for example: open flames, an operating gas appliance, or an operating electric heater).
- Do not pierce or burn.
- Be aware that refrigerants may not contain an odor.

⚠ WARNING

Auxiliary devices which may be a potential ignition source shall not be installed in the duct work. Examples of such potential ignition sources are hot surfaces with a temperature exceeding 700°C and electric switching devices.

⚠ WARNING

For duct connected appliances, false ceilings or drop ceilings may be used as a return air plenum if a REFRIGERANT DETECTION SYSTEM is provided in the appliance and any external connections are also provided with a sensor immediately below the return air plenum duct joint.

⚠ CAUTION

Any service personnel installing, decommissioning, or performing maintenance on the unit must be properly trained with A2L refrigerants.

⚠ IMPORTANT

In addition to conventional charging procedures, the following requirements shall be followed.

- Ensure that contamination of different refrigerants does not occur when using charging equipment. Hoses or lines shall be as short as possible to minimize the amount of refrigerant contained in them.
- Cylinders shall be kept in an appropriate position according to the instructions.

⚠ IMPORTANT

- Ensure that the REFRIGERATING SYSTEM is earthed prior to charging the system with refrigerant.
- Label the system when charging is complete (if not already).
- Extreme care shall be taken not to overfill the REFRIGERATING SYSTEM. Prior to recharging the system, it shall be pressure tested with the appropriate purging gas. The system shall be leak tested on completion of charging, but prior to commissioning. A follow up leak test shall be carried out prior to leaving the site.

⚠ IMPORTANT

When removing refrigerant from a system, either for servicing or decommissioning, it is recommended good practice that all refrigerants are removed safely. When transferring refrigerant into cylinders, ensure that only appropriate refrigerant recovery cylinders are employed. Ensure that the correct number of cylinders for holding the total system charge is available. All cylinders to be used are designated for the recovered refrigerant and labelled for that refrigerant (i. e. special cylinders for the recovery of refrigerant). Cylinders shall be complete with pressure-relief valve and associated shut-off valves in good working order. Empty recovery cylinders are evacuated and, if possible, cooled before recovery occurs.

The recovery equipment shall be in good working order with a set of instructions concerning the equipment that is at hand and shall be suitable for the recovery of all appropriate refrigerants including, when applicable, flammable refrigerants. In addition, a set of calibrated weighing scales shall be available and in good working order. Hoses shall be complete with leak-free disconnect couplings and in good condition. Before using the recovery machine, check that it is in satisfactory working order, has been properly maintained and that any associated electrical components are sealed to prevent ignition in the event of a refrigerant release. Consult manufacturer if in doubt. The recovered refrigerant shall be returned to the refrigerant supplier in the correct recovery cylinder, and the relevant waste transfer note arranged. Do not mix refrigerants in recovery units and especially not in cylinders. If compressors or compressor oils are to be removed, ensure that they have been evacuated to an acceptable level to make certain that flammable refrigerant does not remain within the lubricant. The evacuation process shall be carried out prior to returning the compressor to the suppliers. Only electric heating to the compressor body shall be employed to accelerate this process. When oil is drained from a system, it shall be carried out safely.

⚠ IMPORTANT

Verify cabling will not be subject to wear, corrosion, excessive pressure, vibration, sharp edges or any other adverse environmental effects. The check shall also take into account the effects of aging or continual vibration from sources such as compressors or fans.

⚠ IMPORTANT

When breaking into the refrigerant circuit to make repairs – or for any other purpose – conventional procedures shall be used. However, for flammable refrigerants it is important that best practice be followed and, since flammability is a consideration, procedures such as safely remove refrigerant following local and national regulations, purging the circuit with inert gas, evacuating (optional for A2L), purging with inert gas (optional for A2L), or opening the circuit by cutting or brazing be adhered to. The refrigerant charge shall be recovered into the correct recovery cylinders if venting is not allowed by local and national codes. For appliances containing flammable refrigerants, the system shall be purged with oxygen-free nitrogen to render the appliance safe for flammable refrigerants. This process might need to be repeated several times. Compressed air or oxygen shall not be used for purging refrigerant systems.

For appliances containing flammable refrigerants, refrigerants purging shall be achieved by breaking the vacuum in the system with oxygen free nitrogen and continuing to fill until the working pressure is achieved, then venting to atmosphere, and finally pulling down to a vacuum (optional for A2L). This process shall be repeated until no refrigerant is within the system (optional for A2L). When the final oxygen free nitrogen charge is used, the system shall be vented down to atmospheric pressure to enable work to take place. Ensure that the outlet for the vacuum pump is not close to any potential ignition sources and that ventilation is available.

NOTE – *R454B is an A2L refrigerant. The system installation must meet the following parameters based upon total refrigerant charge. TAmin (Total minimum conditioned area) is the minimum allowable conditioned area based upon the total system charge at sea level. Values must be multiplied by altitude adjustment factor at installed altitude.*

See tables below

Table 1. Minimum conditioned area

ETIPR..... 108173-02	charge (lb)	<4	4	6	8	10
	charge (kg)	<1.8	1.8	2.7	3.6	4.5
Minimum Conditioned Area (ft^2)		N/A*	60	90	120	150
Minimum Conditioned Area (m^2)		N/A*	5.6	8.4	11.2	14.0

*Units with refrigerant charge below 4 lb.(1.8 kg) do not require a minimum conditioned room area.
-Units supply duct must be connected via air duct system to one or more rooms, totaling minimum conditioned area.

NOTE *– Multiply values in TAmin table by the Altitude Adjustment Factors to correct TAmin based on installed altitude.*

Altitude Adjustment Factor

Altitude (m)	0	200	400	600	800	1000	1200	1400	1600
Altitude (ft)	0	660	1310	1970	2620	3280	3940	4590	5250
Adj. Factor	1	1	1	1	1.02	1.05	1.04	1.1	1.12
Altitude (m)	1600	1800	2000	2200	2400	2600	2800	3000	3200
Altitude (ft)	5250	5910	6560	7220	7870	8530	9190	9840	10500
Adj. Factor	1.12	1.15	1.18	1.21	1.25	1.28	1.32	1.36	1.4

Qmin Table			
Refrigerant Charge lb (kg)	**CFM Required**	**Refrigerant Charge lb (kg)**	**CFM Required**
5 (2.3)	135	18 (8.1)	487
6 (2.7)	162	19 (8.6)	514
7 (3.2)	189	20 (9.1)	541
8 (3.6)	216	21 (9.5)	568
9 (4.1)	244	22 (10)	595
10 (4.5)	271	23 (10.4)	622
11 (5)	298	24 (10.9)	649
12 (5.4)	325	25 (11.3)	676
13 (5.9)	352	26 (11.7)	704
14 (6.4)	379	27 (12.2)	731
15 (6.8)	406	28 (12.7)	758
16 (7.3)	433	29 (13.2)	785
17 (7.7)	460	30 (13.6)	812

NOTE *– Qmin minimum airflow requirement for refrigerant leak mitigation.*

Unit Dimensions (Inches) - Small Base Gas/Electric

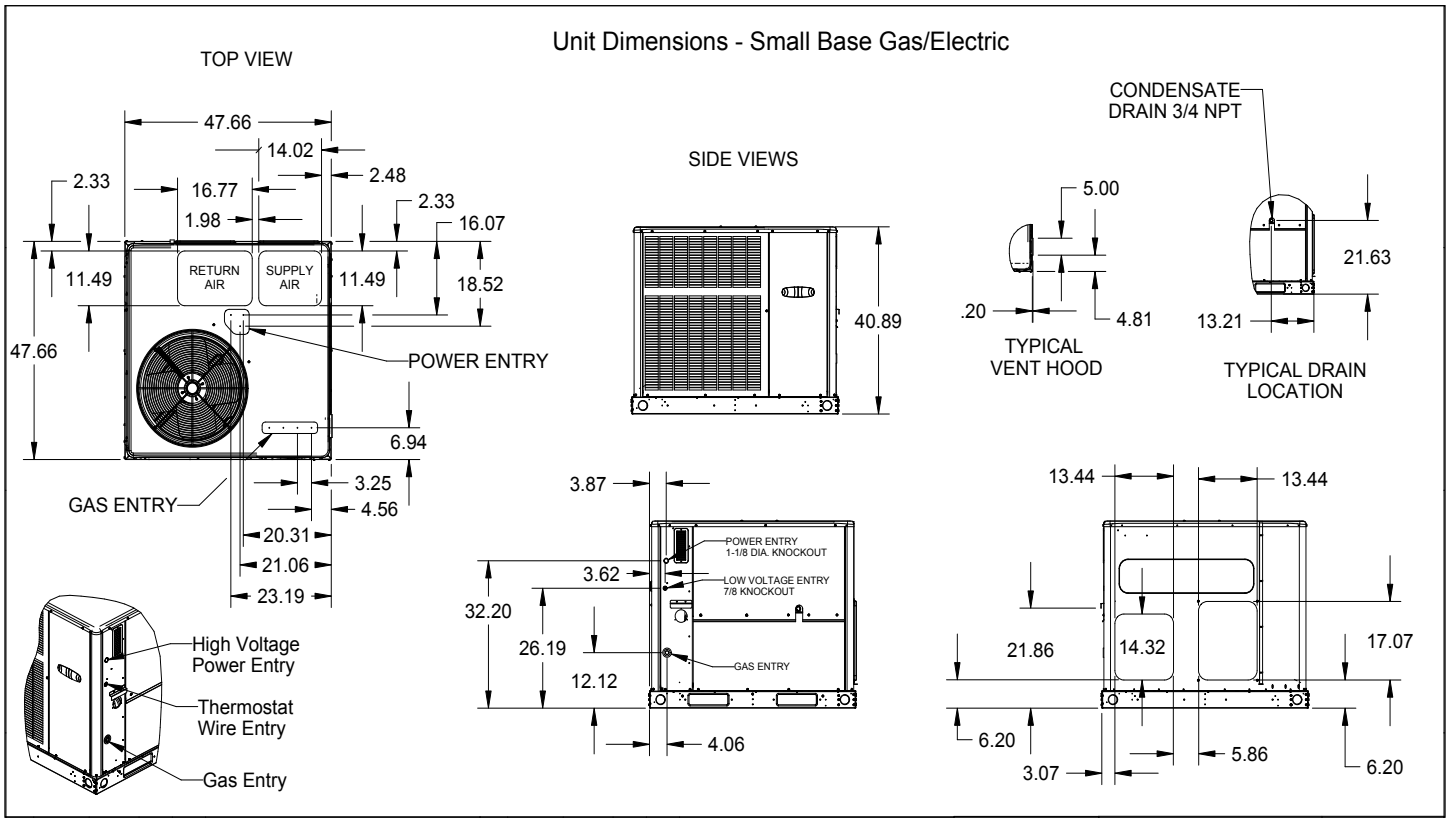

Unit Dimensions (Inches) - Large Base Gas/Electric

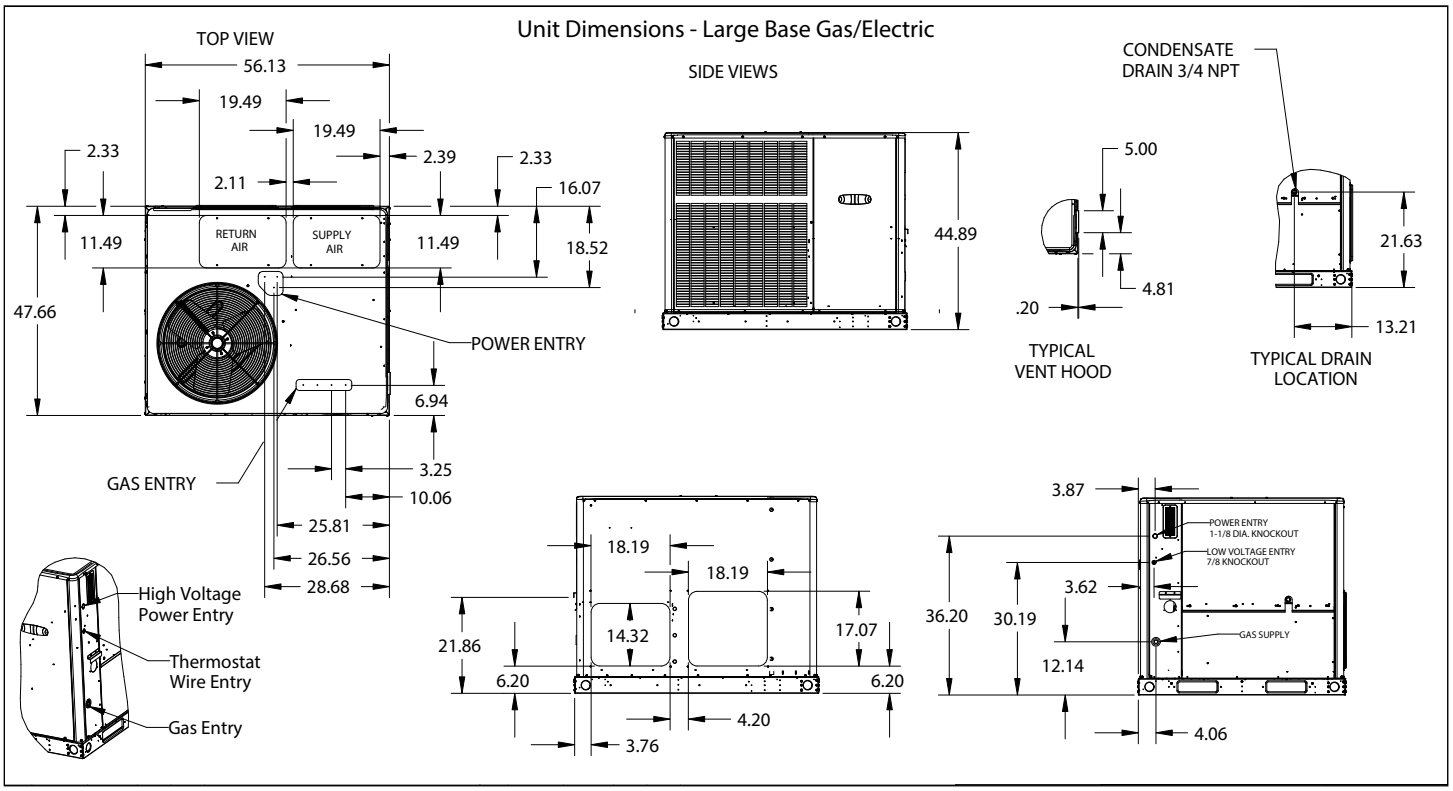

Roof Curb Dimensions (Inches (mm)) - Small Base Gas/Electric

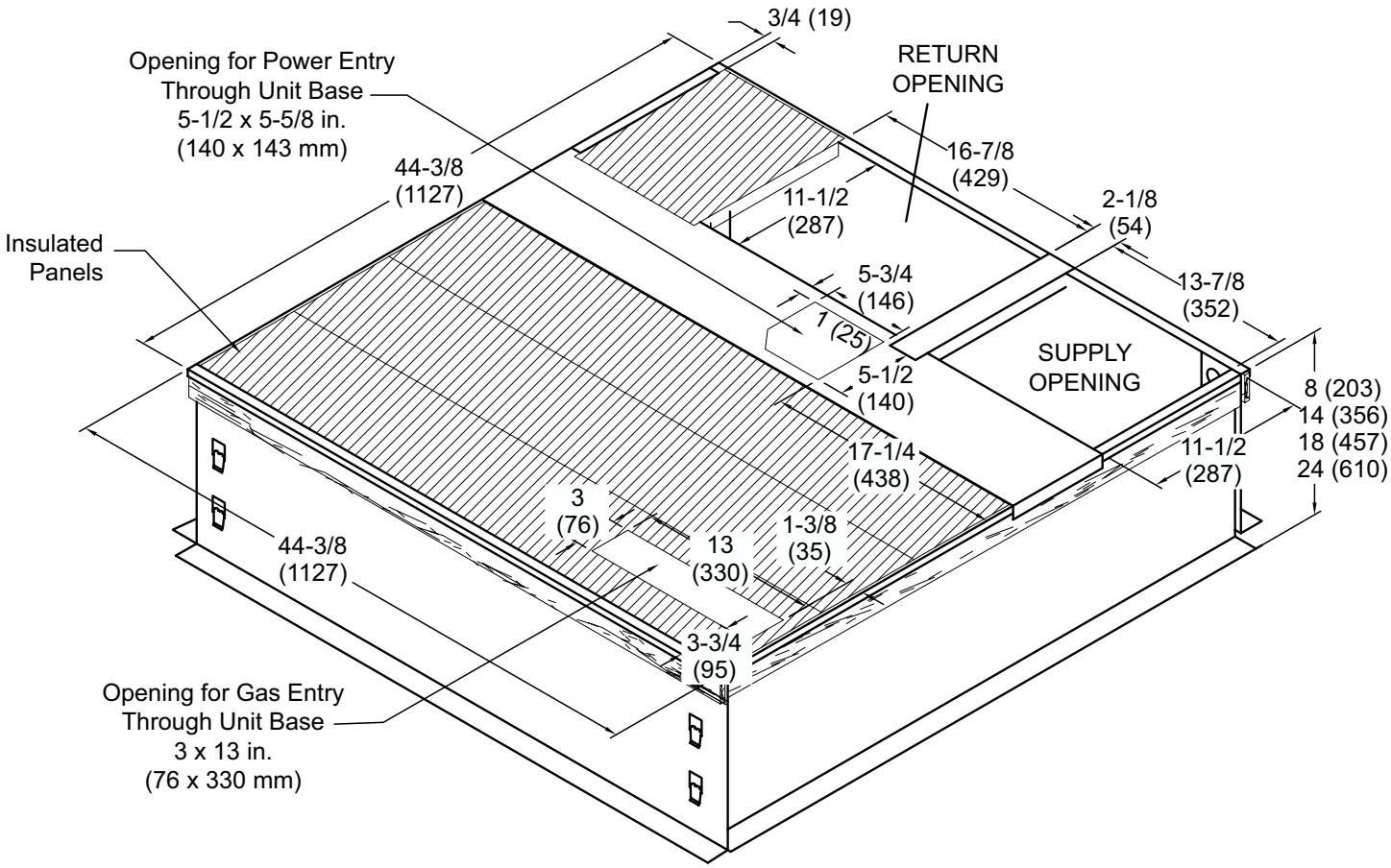

NOTE - Roof deck may be omitted within confines of curb.

NOTE - If bottom entry is used, condensate from the heat exchanger may leak during warm ambient temperatures in humid climates. Ensure that bottom entry is watertight, if used.

Roof Curb Dimensions (Inches (mm)) - Large Base Gas/Electric

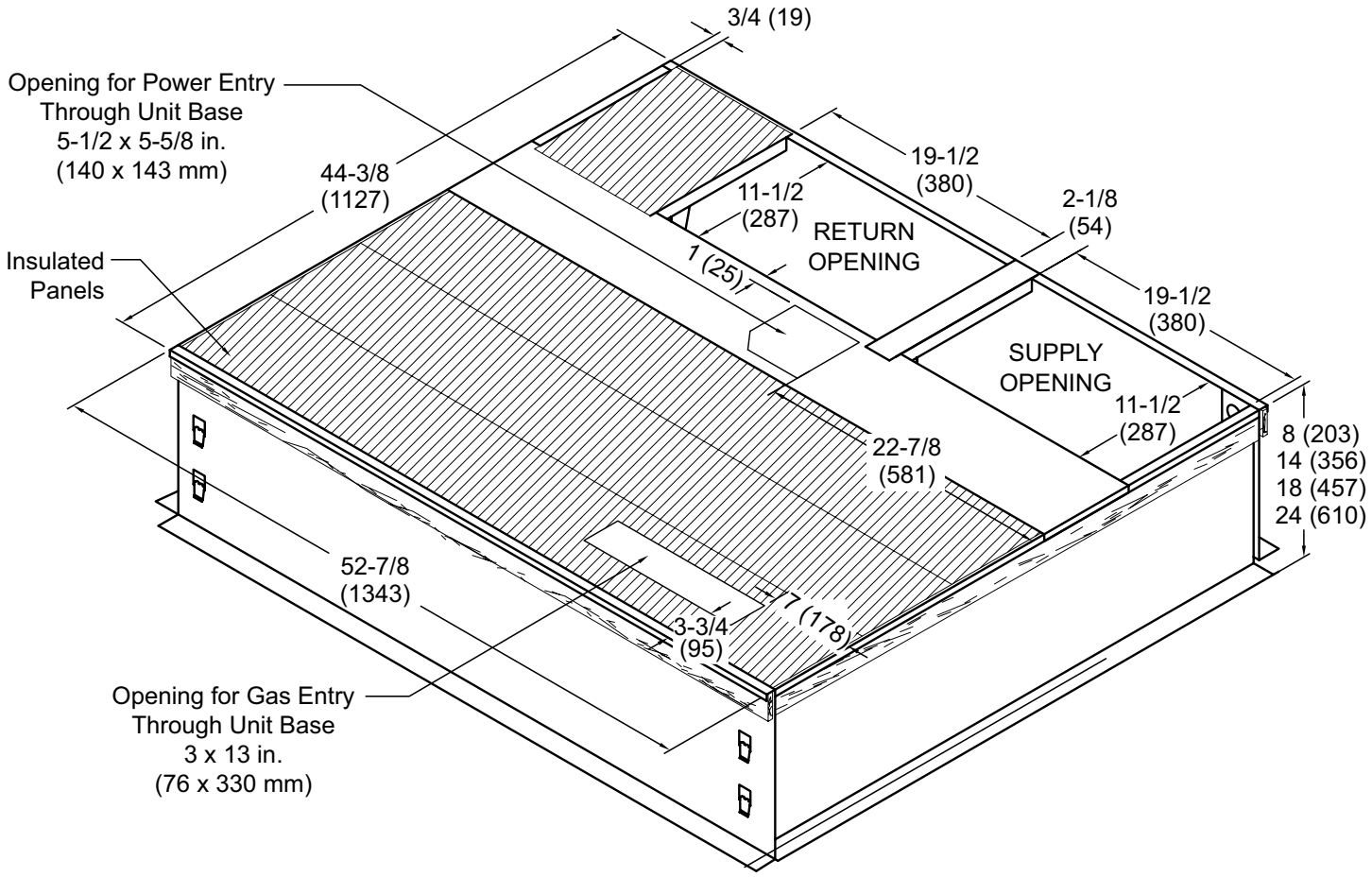

NOTE - Roof deck may be omitted within confines of curb.

NOTE - If bottom entry is used, condensate from the heat exchanger may leak during warm ambient temperatures in humid climates. Ensure that bottom entry is watertight, if used.

Adjustable Roof Curb Dimensions (Inches) - Small Base Gas/Electric (Knock-Down Style)

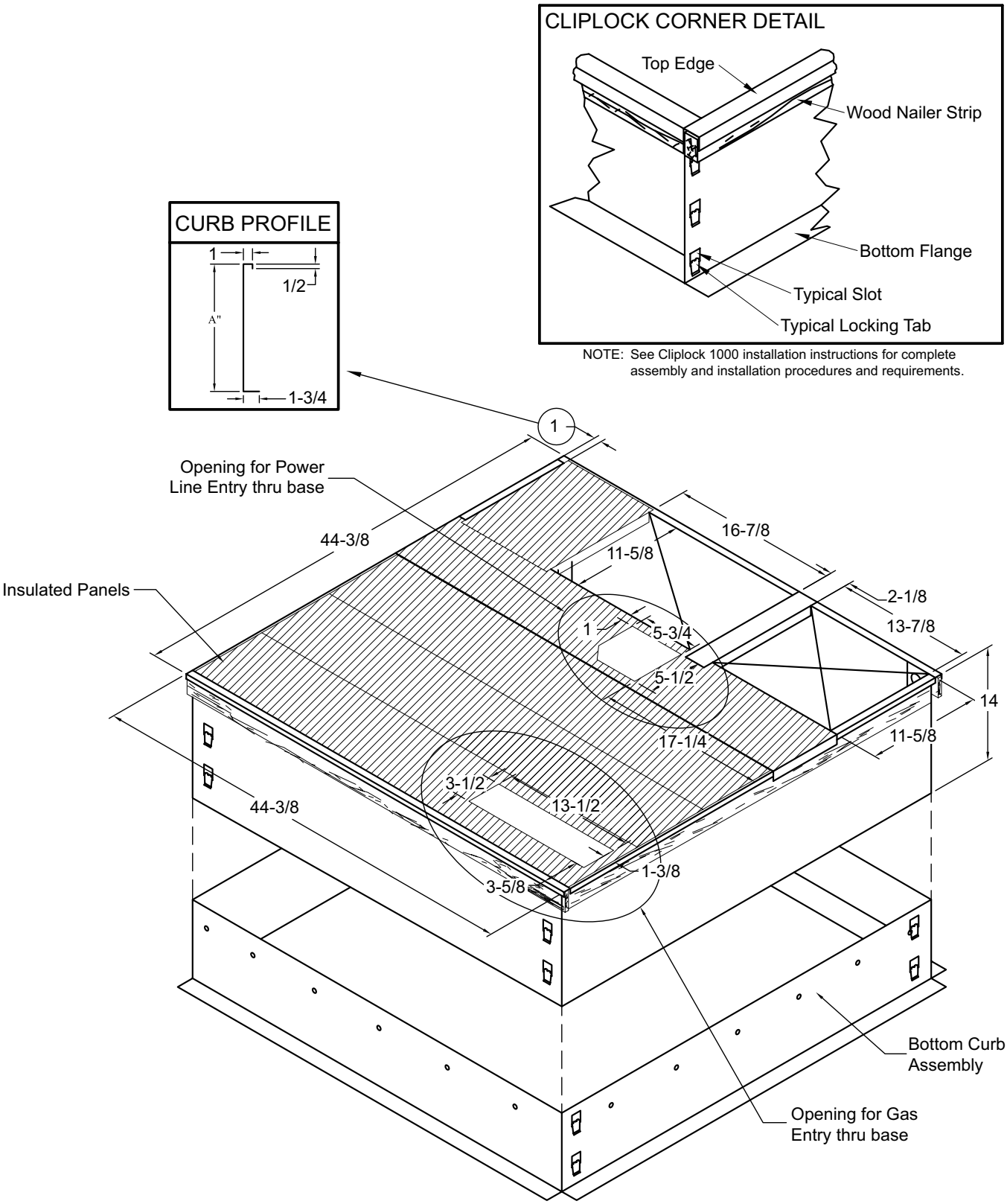

NOTE - Roof deck may be omitted within confines of curb.

NOTE - If bottom entry is used, condensate from the heat exchanger may leak during warm ambient temperatures in humid climates. Ensure that bottom entry is watertight, if used.

Adjustable Roof Curb Dimensions (Inches) - Large Base Gas/Electric (Knock-Down Style)

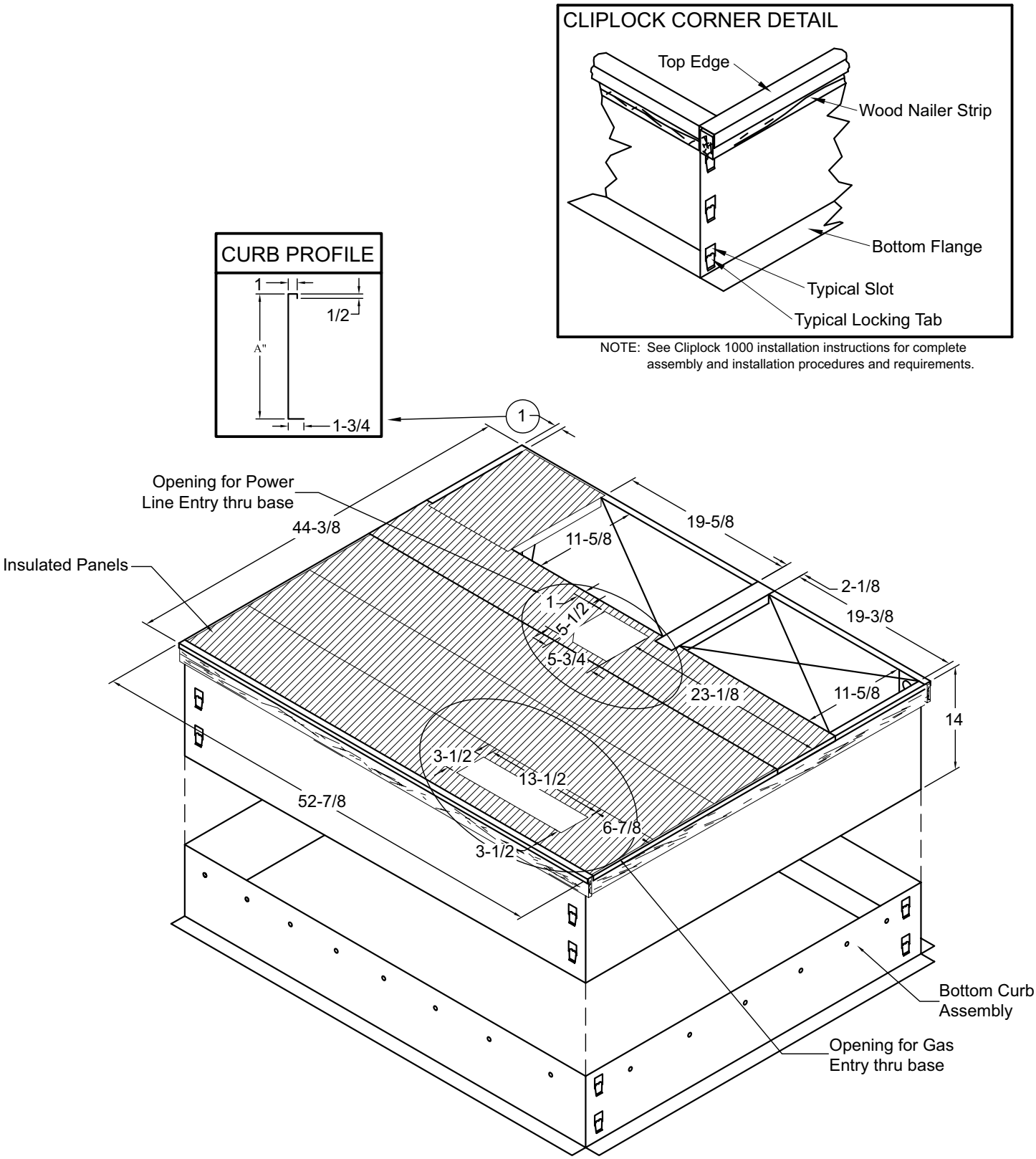

NOTE: See Cliplock 1000 installation instructions for complete assembly and installation procedures and requirements.

NOTE - Roof deck may be omitted within confines of curb.

NOTE - If bottom entry is used, condensate from the heat exchanger may leak during warm ambient temperatures in humid climates. Ensure that bottom entry is watertight, if used.

Adjustable Roof Curb Dimensions (Inches (mm)) (Welded Style)

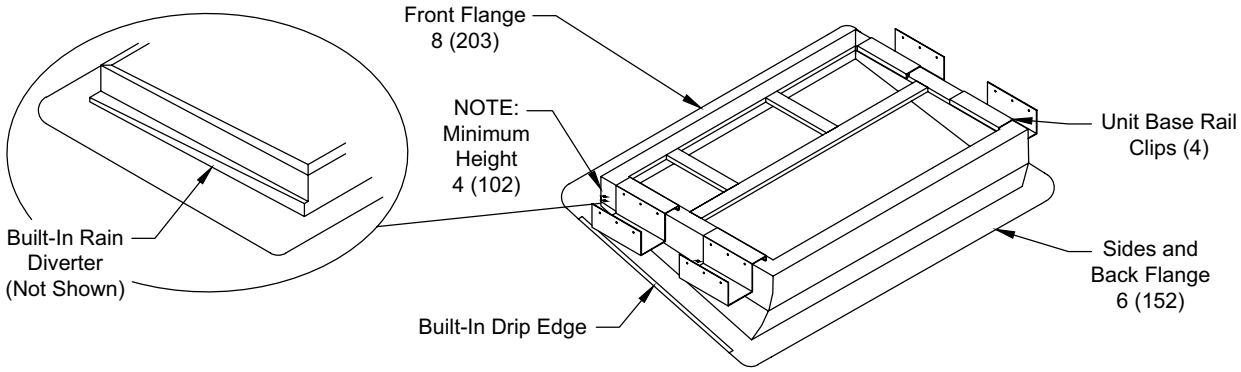

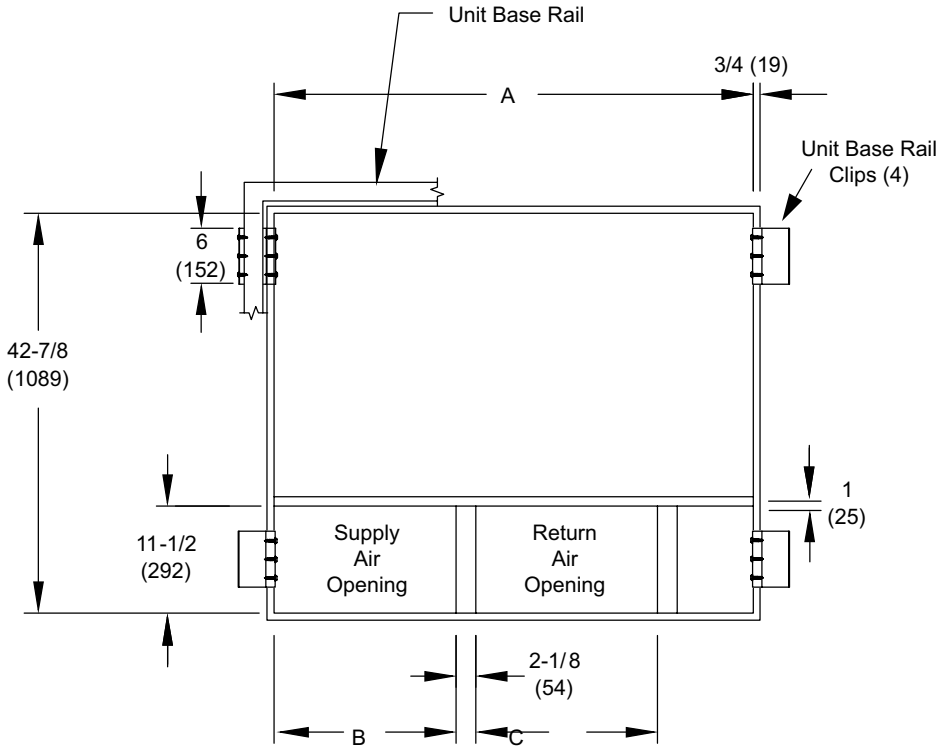

Usage	A		B		C	
	in.	mm	in.	mm	in.	mm
24,30,36	42-7/8	1089	13-7/8	352	16-7/8	429
42,48,60	51-3/8	1305	19-1/2	495	19-1/2	495

Installation

These instructions must be saved for future reference.

These units are single package air conditioners with gas heat designed for outdoor installation on a rooftop or a slab.

The units are completely assembled. All piping, refrigerant charge, and electrical wiring are factory installed and tested. The units require only electric power, gas piping, condensate drain, and duct connections, plus installation of the vent cover at the point of installation.

If components are to be added to a unit to meet local codes, they are to be installed at the dealer's and/or customer's expense.

The size of unit for the proposed installation should be based on heat loss/heat gain calculation made according to the methods of Air Conditioning Contractors of America (ACCA).

⚠ WARNING

In the State of Massachusetts:

This product must be installed by a licensed Plumber or Gas Fitter. When flexible connectors are used, the maximum length shall not exceed 36". When lever-type gas shutoffs are used, they shall be T-handle type.

These installation instructions are intended as a general guide only, for use by an experienced, qualified contractor.

These units are certified by E.T.L. Testing Laboratories, Inc.:

- For use as a forced air furnace with cooling unit.
- For outdoor installation only.
- For installation on combustible material.
- For use with natural gas or propane gas. (Conversion kit required for propane gas application.)

These units are not suitable for use with conventional venting systems.

Inspection

As soon as the unit is received, it should be inspected for possible damage during transit. If damage is evident, the extent of the damage should be noted on the carrier's freight bill. A separate request for inspection by the carrier's agent should be made in writing.

Location

Use the following guidelines to select a suitable location for these units.

1. Unit is designed for outdoor installation only. Unit must be installed so all electrical components are protected from water.
2. Condenser coils must have an unlimited supply of air.
3. For ground level installation, use a level prefabricated pad or use a level concrete slab. Do not tie the slab to the building foundation.
4. Maintain level within a tolerance of 1/4" maximum across the entire length or width of the unit.

⚠ CAUTION

Unit levelness is critical for proper float switch operation.

5. Do not locate the unit where the combustion air supply will be exposed to any of the following substances:

- Permanent wave solutions
- Chlorinated waxes and cleaners
- Chlorine-based swimming pool chemicals
- Water softening chemicals
- Deicing salts or chemicals
- Carbon tetrachloride
- Halogen-type refrigerants
- Cleaning solvents (such as perchloroethylene)
- Printing inks, paint removers, varnishes, etc.
- Cements and glues
- Antistatic fabric softeners for clothes dryers
- Masonry acid washing materials
- Chlorinated laundry products
- Hydrochloric acid

Installing the Unit

Every working procedure that affects safety means shall only be carried out by competent persons. This appliance is not to be used by persons (including children) with reduced physical, sensory or mental capabilities, or lack of experience and knowledge, unless they have been given supervision or instruction concerning use of the appliance by a person responsible for their safety. Examples of such working procedures are breaking into the refrigerating circuit, opening of sealed components, and opening of ventilated enclosures.

- Work shall be undertaken under a controlled procedure so as to minimize the risk of a flammable gas or vapor being present while the work is being performed.

- The area shall be checked with an appropriate refrigerant detector prior to and during work, to ensure the technician is aware of potentially toxic or flammable atmospheres. Ensure that the leak detection equipment being used is suitable for use with all applicable refrigerants, i. e. non-sparking, adequately sealed or intrinsically safe.
- If any hot work is to be conducted on the refrigerating equipment or any associated parts, the appropriate fire extinguishing equipment shall be available to hand. Have a dry powder or CO2 fire extinguisher adjacent to the charging area.
- No person carrying out work in relation to a refrigerating system which involves exposing any pipe work shall use any sources of ignition in such a manner that it may lead to the risk of fire or explosion. All possible ignition sources, including cigarette smoking, should be kept sufficiently far away from the site of installation, repairing, removing and disposal, during which refrigerant can possibly be released to the surrounding space. Prior to work taking place, the area around the equipment is to be surveyed to make sure that there are no flammable hazards or ignition risks. “No Smoking” signs shall be displayed.
- Ensure that the area is in the open or that it is adequately ventilated before breaking into the system or conducting any hot work. A degree of ventilation shall continue during the period that the work is carried out.
- Pipe-work including piping material, pipe routing, and installation shall include protection from physical damage in operation and service, and be in compliance with national and local codes and standards
- All field joints shall be accessible for inspection prior to being covered or enclosed.
- Where electrical components are being changed, they shall be fit for the purpose and to the correct specification. At all times the manufacturer’s maintenance and service guidelines shall be followed. If in doubt, consult the manufacturer’s technical department for assistance. The following checks shall be applied to installations using FLAMMABLE REFRIGERANTS as applicable:

1. The actual refrigerant charge is in accordance with the room size within which the refrigerant containing parts are installed.

2. The ventilation machinery and outlets are operating adequately and are not obstructed.

3. If an indirect refrigerating circuit is being used, the secondary circuit shall be checked for the presence of refrigerant.

4. Markings on the equipment should be visible and legible. Markings and signs that are illegible shall be corrected.

5. Refrigerating pipe or components are installed in a position where they are unlikely to be exposed to any substance which may corrode refrigerant containing components, unless the components are constructed of materials which are inherently resistant to being corroded or are suitably protected against being so corroded.

For systems containing refrigerant, all repair and maintenance to electrical components shall include initial safety checks and component inspection procedures such as that capacitors are discharged in a safe manner to avoid possibility of sparking, that no live electrical components and wiring are exposed while charging, recovering, or purging the system, and that there is continuity of earth bonding. If a fault exists that could compromise safety, then no electrical supply shall be connected to the circuit until it is satisfactorily dealt with. If the fault cannot be corrected immediately but it is necessary to continue operation, an adequate temporary solution shall be used that is reported to the owner of the equipment, so all parties are advised.

NOTE: *Sealed electrical components shall be replaced, not repaired.*

NOTE: *Intrinsically safe components must be replaced, not repaired.*

NOTE: *All maintenance staff and others working in the local area shall be instructed on the nature of work being carried out with work in confined spaces being avoided.*

- Under no circumstances shall potential sources of ignition be used in the searching for or detection of refrigerant leaks. A halide torch (or any other detector using a naked flame) shall not be used. The following leak detection methods are deemed acceptable for all refrigerant systems. Electronic leak detectors may be used to detect refrigerant leaks but, in the case of flammable refrigerants, the sensitivity may not be adequate, or may need re-calibration. (Detection equipment shall be calibrated in a refrigerant-free area.) Ensure that the detector is not a potential source of ignition and is suitable for the refrigerant used. Leak detection equipment shall be set at a percentage of the LFL of the refrigerant and shall be calibrated to the refrigerant employed, and that 25% refrigerant is con-firmed. Leak detection fluids are also suitable for use with most refrigerants but the use of detergents containing chlorine shall be avoided as the chlorine may react with the refrigerant and corrode the copper pipe-work. If a leak is suspected, all naked flames shall be removed/ extinguished. If a leakage of refrigerant is found which requires brazing, all of the refrigerant shall be recovered from the system, or isolated (by means of shut off valves) in a part of the system remote from the leak.
- When breaking into the refrigerant circuit to make repairs – or for any other purpose – conventional procedures shall be used. However, for flammable refrigerants it is important that best practice be followed

and, since flammability is a consideration, procedures such as safely remove refrigerant following local and national regulations, purging the circuit with inert gas, evacuating (optional for A2L), purging with inert gas (optional for A2L), or opening the circuit by cutting or brazing be adhered to. The refrigerant charge shall be recovered into the correct recovery cylinders if venting is not allowed by local and national codes. For appliances containing flammable refrigerants, the system shall be purged with oxygen-free nitrogen to render the appliance safe for flammable refrigerants. This process might need to be repeated several times. Compressed air or oxygen shall not be used for purging refrigerant systems. For appliances containing flammable refrigerants, refrigerants purging shall be achieved by breaking the vacuum in the system with oxygen-free nitrogen and continuing to fill until the working pressure is achieved, then venting to atmosphere, and finally pulling down to a vacuum (optional for A2L). This process shall be repeated until no refrigerant is within the system (optional for A2L). When the final oxygen-free nitrogen charge is used, the system shall be vented down to atmospheric pressure to be able to perform the required work. Ensure that the outlet for the vacuum pump is not close to any potential ignition sources and working area is well ventilated.

Use of Unit During Construction

Use of this unit as a construction heater or air conditioner is not recommended during any phase of construction. Very low return air temperatures, harmful vapors and operation of the unit with clogged or misplaced filters will damage the unit.

If this unit has been used for heating or cooling of buildings or structures under construction, the following conditions must be met or the warranty will be void:

- A room thermostat must control the unit. The use of fixed jumpers that will provide continuous heating or cooling is not allowed.
- A pre-filter must be installed at the entry to the return air duct.
- MERV 11 or greater air filters must be installed in the system and must be regularly inspected and maintained (e.g., regular static checks and replaced at end of life) during construction.
- The return air duct must be provided and sealed to the unit.
- Return air temperature range between 55°F (13°C) and 80°F (27°C) must be maintained.
- Air filters must be replaced and pre-filters must be removed upon construction completion.
- The input rate and temperature rise must be set per the unit rating plate.
- The heat exchanger, components, duct system, air filters and evaporator coil must be thoroughly cleaned following final construction clean-up.
- The unit operating conditions (including airflow, cooling operation, ignition, input rate, temperature rise and venting) must be verified according to these installation instructions.

Clearances

All units require certain clearances for proper operation and service. Refer to Table 2 for the minimum clearances to combustibles, servicing, and proper unit operation. In the U.S., units may be installed on combustible floors made from wood or class A, B, or C roof covering material. In Canada, units may be installed on combustible floors. Units must be installed outdoors.

Clearance to combustibles below the unit flue is 10 inches since the flue points down.

Do not permit overhanging structures or shrubs to obstruct condenser air discharge outlet, combustion air inlet, or vent outlet.

Table 2. Minimum Clearances

	Clearance to Combustibles	Clearance for Service Access
Front of unit	0 in.	24 in.
Back of unit	0 in.	0 in.
Left side	0 in.	24 in.
Right side (from vent hood)	12 in.	24 in.
Base of unit	0 in.	0 in.
Top of unit	0 in.	48 in.
Minimum clearance to combustible material below the flue is 10 inches to allow proper dissipation of flue gasses and temperatures. For any future service, installer must provide access to screws of top and rear panels.		

Roof Curb Installation

If a roof curb is used, follow the manufacturer's installation instructions and be sure that all required clearances are observed (see Clearances section).

Rigging Unit

Exercise care when moving the unit. Do not remove any packaging until the unit is near the place of installation.

1. Connect rigging to the unit base rails using both holes in each corner.
2. All panels must be in place for rigging.
3. Place field-provided spreaders in place. Spreaders must be of adequate strength and length (must exceed unit dimension by 6 inches).

Units may also be moved or lifted with a forklift. **The lengths of the forks of the forklift must be a minimum of 42 inches.**

⚠ CAUTION

Before lifting a unit, make sure that the weight is distributed equally on the cables so that it will lift evenly.

Unpacking

NOTE: *Some units will be packaged with stacking brackets while other units will be packaged on a pallet.*

1. ***For units packaged with stacking brackets:*** Locate the four stacking brackets at each corner of the top panel. Remove the screws that secure these brackets. All screws must be re-installed. The stacking brackets can be discarded.
2. ***For units packaged on a pallet:*** Remove the unit from the skid.
3. Remove the bag and remaining packaging material, which can be discarded.
4. Locate the four plastic fork slot bumpers on the base rails. Remove the fasteners and bumpers and discard.

Service Access

Access to all serviceable components is provided by four removable panels: upper access panel (for blower, ID coil, and optional filter), heat exchanger access, control access panel, and compressor access.

⚠ CAUTION

As with any Mechanical equipment, personal injury can result from contact with sharp sheet metal edges. Be careful when you handle this equipment.

⚠ WARNING

This unit is charged with R-454B refrigerant. Operating pressures for units charged with R-454B are higher than pressures in units charged with HCFC-22. All service equipment MUST be rated for use with R-454B refrigerant.

Venting

The vent outlet must be installed in a location as to prevent building degradation and must be consistent with the National Fuel Gas Code, Z223.1 or CAN/CGA-B149.1 & .2.

The products of combustion are discharged through a screened opening on the gas heat side panel. The horizontal vent system shall terminate at least 4 feet below, 4 feet horizontally from, or 1 foot above any door, window, or gravity air inlet into the building. The vent system shall terminate at least 3 feet above any forced air inlet located within 10 feet.

The unit shall be installed in a manner such that snow accumulation will not restrict the flow of flue products.

Minimum horizontal clearance of 4 feet from electric meters, gas meters, regulator, and relief equipment is required.

In addition to the above requirements, consideration must be given to prevent unwanted ice buildup from the vent condensate. The vent should not be located on the side of a building where the prevailing winter winds could trap the moisture, causing it to freeze on the walls or on overhangs (under eaves). The vent should not be located over a sidewalk, patio, or other walkway where the condensate could cause the surface to become slippery.

The products of combustion must not be allowed to accumulate within a confined space where they may be recirculated.

Rain Baffle Installation

The unit is shipped with the rain baffle inside the control compartment. Locate the rain baffle and attach to side of utility panel with screws provided in the instruction bag (see Figure 1).

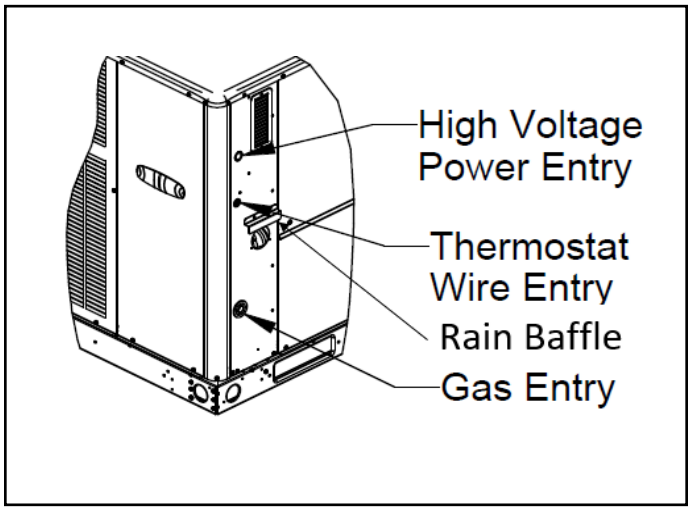

Figure 1. Installing the Vent Cover

NOTE:

If an existing gas furnace is being removed from a common venting system when this packaged unit is installed, then read and follow the instructions in the "Removal of Unit from Common Venting System" section that follows. Otherwise, you may skip this section.

Removal of Unit from Common Venting System

When an existing furnace is removed from a common venting system serving other appliances, the venting system is likely to be too large to properly vent the remaining attached appliances. The following test should be conducted with each appliance while the other appliances connected to the common venting system are not in operation.

1. Seal any unused openings in the common venting system.
2. Visually inspect the venting system for proper size and horizontal pitch and determine there is no blockage or restriction, leakage, corrosion, or other deficiencies which could cause an unsafe condition.
3. Insofar as is practical, close all building doors and windows between the space in which the appliances remaining connected to the common venting system are located and other spaces in the building. Turn on clothes dryers and any appliance not connected to the common venting system. Turn on exhaust fans, such as range hoods and bathroom exhausts, so they will operate at maximum speed. Do not operate a summer exhaust fan. Close fireplace dampers.
4. Following the lighting instructions, place the unit being inspected in operation. Adjust the thermostat so the appliance will operate continuously.
5. Test for spillage at the draft control relief opening after 5 minutes of main burner operation. Use the flame of a match or candle.
6. Follow the preceding steps for each appliance connected to the common venting system.
7. After it has been determined that each appliance remaining connected to the common venting system properly vents when tested as outlined above, return doors, windows, exhaust fans, fireplace dampers, and any other fuel burning appliance to their previous condition of use.
8. If improper venting is observed during any of the above tests, the common venting system must be corrected. See National Fuel Gas Code, ANSI Z223.1 (latest edition) or CAN/CGA B149.1 & .2 Canadian Installation Codes to correct improper operation of common venting system.

Duct System

The duct system should be designed and sized according to the methods in the Air Conditioning Contractors of America (ACCA) manual that is most appropriate to the installation application.

A closed return air duct system shall be used. This shall not preclude use of economizers or outdoor fresh air intake. It is recommended that supply and return air duct connections at the unit be made with flexible joints.

The supply and return air duct systems should be designed for the CFM and static requirements of the job. They should not be sized by matching the dimensions of the duct connections on the unit.

The unit is shipped ready for horizontal flow (side duct connections) or downflow (bottom duct connections). All units are equipped with a drain pan overflow switch that is installed and wired at the factory. Duct attachment screws are intended to go into the duct panel flanges. Duct to unit connections must be sealed and weather proofed.

For horizontal duct systems:

1. Remove the duct covers on side of the unit. They can be discarded.
2. Install the duct system to the unit.

For downflow duct systems:

1. Remove the duct covers on side of the unit. Keep the screws and the covers as they will be re-installed later.
2. Remove the downflow duct covers located inside unit. Remove the four screws securing each cover. Remove the covers from the unit. They can be discarded.
3. Remove screws located between the supply and return air openings that attach the blower deck to the base pan. These screws can interfere with bottom duct connections or roof curb seals. Discard these screws.
4. Install the duct system to the unit.
5. Re-install the duct covers removed in Step 1.

Filters

Air filters are not supplied with the unit. A field-provided air filter must always be installed ahead of the evaporator coil and must be cleaned or replaced if necessary. Dirty filters will reduce the airflow of the unit.

An optional filter rack kit may be purchased separately for installation inside the unit's coil compartment. Air filter sizes are shown in Table 3 for use with filter rack kit.

NOTE:

The filter rack must be installed prior to installation of the unit in applications where access to the rear panel is limited.

Table 3. Unit Air Filter Sizes - inches

Unit Model	Filter 1	Filter 2
24, 30, 36	14 x 20 x 1	20 x 20 x 1
42, 48, 60	20 x 20 x 1	

Condensate Drain

This package unit is equipped with a 3/4" FPT coupling for condensate line connection. Plumbing must conform to local codes. Use a sealing compound on male pipe threads.

Do not operate unit without a drain trap. The condensate drain is on the negative pressure side of the blower; therefore, air being pulled through the condensate line will prevent positive drainage without a proper trap.

The condensate drain line must be properly trapped, routed to a suitable drain and primed prior to unit commissioning.

NOTE: *Install drain lines and trap so they do not block service access to the unit.*

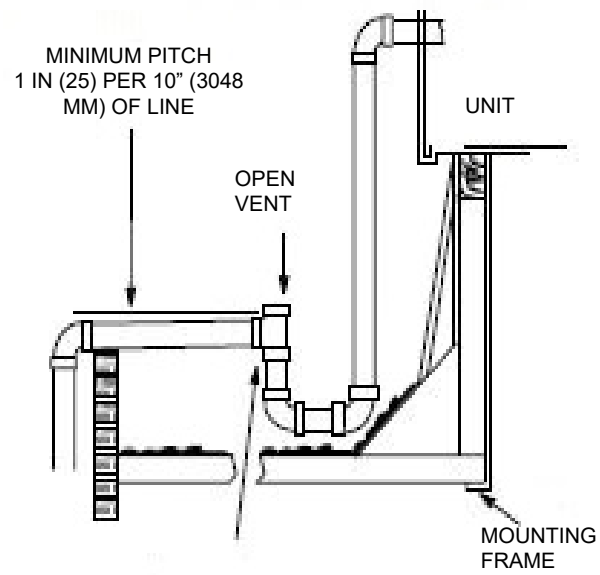

Trap must be deep enough to offset maximum static difference (generally, 3 inches (76 mm) minimum). In addition, the drain line must be supported if longer than 10 feet.

Trap must be primed at start-up.

Figure 2. Typical Condensate Drain Connection

See Figure 2 for proper drain arrangement. The drain line must pitch to an open drain or pump to prevent clogging of the line. Seal around the drain connection with suitable material to prevent air leakage into the return air system.

To prime trap, pour several quarts of water into drain, enough to fill drain trap and line.

⚠ CAUTION

Drain lines should be hand-tightened only. Do not use tools to tighten fitting into drain.

Gas Piping

Proper sizing of a gas piping depends on the cubic feet per hour of gas flow required, specific gravity of the gas, and length of run. National Fuel Gas Code Z223.1 latest edition should be followed in all cases unless superseded by local codes or gas company requirements. In Canada, refer to CAN/CGA B.149.1 & .2 (latest edition).

The heating value of the gas may differ with locality. The value should be checked with the local gas utility. For temperature rise of unit, see unit rating plate.

Gas Piping Recommendations

- A drip leg and a ground joint union must be installed in the gas piping. A ground joint union is recommended by the manifold/valve.
- When required by local codes, a manual shutoff valve may have to be installed outside of the unit.
- Use pipe thread sealing compound resistant to propane gas sparingly on male threads.
- The gas supply should be a separate line and installed in accordance with all safety codes listed on Page 1. After the gas connections have been completed, open the main shutoff valve admitting normal gas pressure to the mains. Check all joints for leaks with soapy solution or other material suitable for the purpose.

⚠ WARNING

Never use a flame to check for gas leaks. Explosion causing injury or death may occur.

- The furnace and its field supplied manual shutoff valve must be disconnected from the gas supply piping system during any pressure testing of that system at test pressures in excess of 1/2 PSIG (3.48kPa).
- A 1/8" N.P.T. plugged tapping, accessible for test gauge connections, must be installed immediately upstream of the gas supply connection to the furnace.

Gas Connection

The gas supply line is routed through the gas entry location on the side of the unit (see Figure 3). A grommet is provided in the instruction bag and should be used to seal gas supply line to gas entry of control compartment.

NOTE: *An optional bottom-entry gas kit is available for these units. See the kit instructions for proper installation details.*

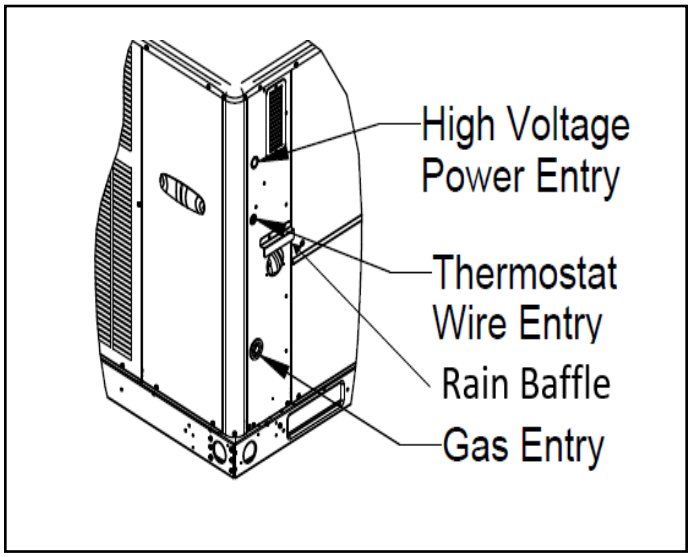

Figure 3.

⚠ WARNING

The furnace must be isolated from the gas supply piping system by closing the field supplied manual shutoff valve during any pressure testing of gas supply piping system at test pressures equal to or less than 1/2 psig or 14" w.c. If the piping system is to be tested at pressures in excess of 1/2 psig, the furnace and its individual shutoff valve must be disconnected from the gas supply piping system.

NOTE: LP/Propane Units, Tanks, and Piping

Units are shipped equipped for use with natural gas, but can be converted to LP/propane in the field by an approved licensed technician. If conversion is required, use the approved conversion kit.

When converting a low NOx unit (designated by an L in some model numbers) to propane, **the NOx inserts must be removed.**

All LP/propane gas equipment must conform to the safety standards of the National Fire Protection Association.

For satisfactory operation, LP/propane gas pressure must be a minimum of 11" w.c. at the unit under full load.

Complete information regarding tank sizing for vaporization, recommended regulator settings, and pipe sizing is available from most regulator manufacturers and LP/propane gas suppliers.

Check all connections for leaks when piping is completed, using a soapy, non-chlorine based solution. **Some soaps used for leak detection are corrosive to certain metals. Carefully rinse piping thoroughly after completing leak detection.**

NOTE: *An optional bottom-entry gas kit is available for these units. See the kit instructions for proper installation details.*

⚠ WARNING

Danger of explosion. Can cause injury or product or property damage. Do not use matches, candles, flame or other sources of ignition to check for leaks.

⚠ CAUTION

If a flexible gas connector is required or allowed by the authority that has jurisdiction, black iron pipe shall be installed at the gas valve and must extend outside the cabinet. The flexible connector can then be added between the black iron pipe and the gas supply line.

Electrical Wiring

See Figure 4 and Figure 5

All wiring should be done in accordance with the National Electrical Code, ANSI/NFPA No. 70 (latest edition); Canadian Electrical Code Part 1, CSA C22.1 (latest edition); or local codes where they prevail. Use wiring with a temperature limitation of 75°C minimum. Run the 208 or 230 volt, 60 hertz electric power supply through a fused disconnect switch to the control box of the unit and connect as shown in the wiring diagram located on the inside of the control access panel.

Power supply to the unit must be N.E.C. Class 1, and must comply with all applicable codes. A disconnect switch should be field provided for the unit; follow local codes to determine what type of switch to use. The switch must be separate from all other circuits. If any of the wire supplied with the unit must be replaced, replacement wire must be of the type shown on the wiring diagram. Electrical wiring must be sized to carry minimum circuit ampacity marked on the unit. **Use copper conductors only.** Each unit must be wired with a separate branch circuit and be properly fused.

NOTE: *An optional bottom-entry power kit is available for these units. See the kit instructions for proper installation details.*

⚠ CAUTION

When connecting electrical power and control wiring to the unit, waterproof type connectors must be used so that water or moisture cannot be drawn into the unit during normal operation.

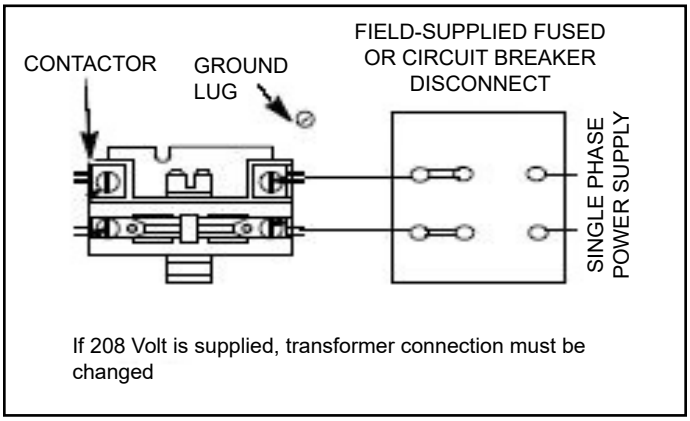

Figure 4. 208/230 Line Voltage Wiring

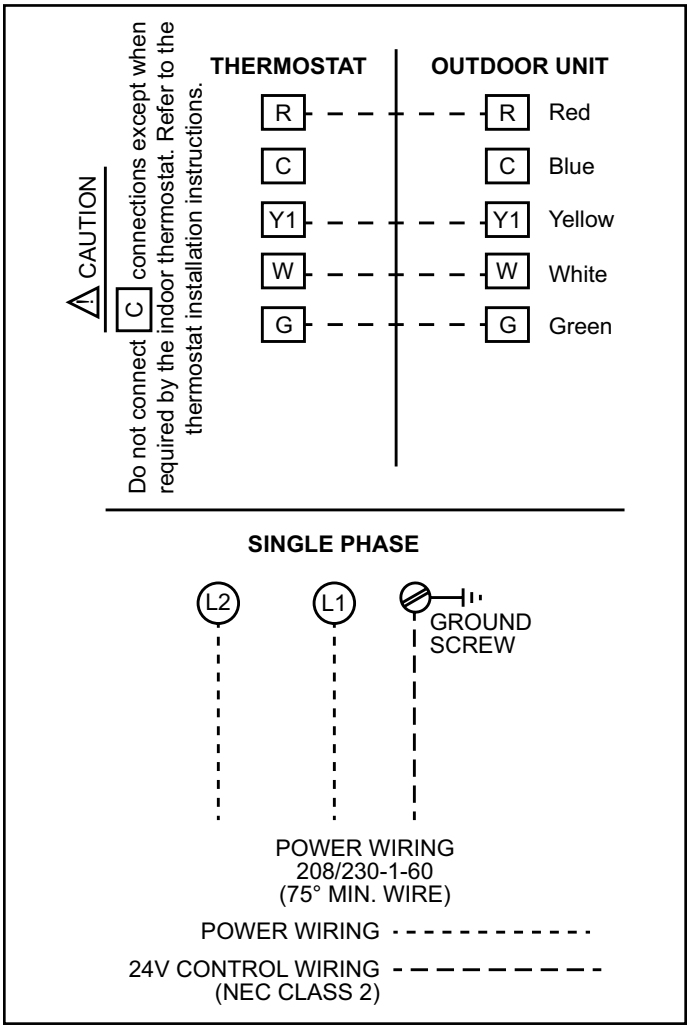

Figure 5. Typical Wiring Connections

Thermostat

The room thermostat should be located on an inside wall where it will not be subject to drafts, sun exposure, or heat from electrical fixtures or appliances. Follow the manufacturer's instructions enclosed with thermostat for general installation procedure. Color-coded insulated wires (#18 AWG) should be used to connect the thermostat to the unit.

Four wires are required for cooling. The heat anticipator setting is 0.75 amp.

Compressor

Units are shipped with compressor mountings factory-adjusted and ready for operation.

> **⚠ CAUTION**
>
> Do not loosen compressor mounting bolts.

Heating Start-Up

For Your Safety, Read Before Lighting

> **⚠ CAUTION**
>
> Furnace is equipped with a direct ignition control. Do not attempt to manually light the burners.

Pre-Start Checklist

Complete the following checks before starting the unit:

1. Check the type of gas being supplied. Be sure it is the same as listed on the unit nameplate.
2. Make sure that the vent cover has been properly installed.

To Light Main Burners

1. Turn off electrical power to unit.
2. Turn the thermostat to lowest setting.
3. Slide the gas valve switch to the "ON" position (see Figure 6).
4. Turn on electrical power to the unit.
5. Set the room thermostat to the desired temperature. (If the thermostat "set" temperature is above room temperature after the pre-purge time expires, main burners will light.)

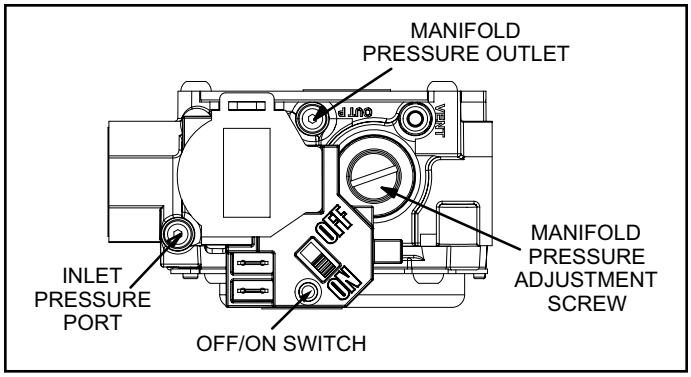

Figure 6. Gas Valve

To Shut Down Main Burners

1. Turn off electrical power to unit.
2. Slide the gas valve switch to the "OFF" position (see Figure 6).

Post-Start Checklist

After the entire control circuit has been energized and the heating section is operating, make the following checks:

1. Check for gas leaks, using soapy solution, in the unit piping as well as the supply piping.
2. Check for correct manifold gas pressures (see Manifold Gas Pressure Adjustment Regulator sections).
3. Check the supply gas pressure. It must be within the limits shown on the rating plate. Supply pressure should be checked with all gas appliances in the building at full fire. At no time should the standby gas pressure exceed 13" w.c., nor the operation pressure drop below 5" w.c. for natural gas units or 11" w.c. for propane gas. If gas pressure is outside these limits, contact the gas supplier for corrective action.
4. Adjust temperature rise to the range specified on the rating plate.
5. The RDS Non-Communicating Blower Control Board is equipped with a Test/Reset button. Once the HVAC system has been powered, the system will then run through a purge sequence for five (5) minutes. After the purge sequence is complete, proceed to testing cooling demand and heating demand.

Manifold Gas Pressure Adjustment Regulator – Natural Gas

For purpose of input adjustment, the minimum permissible gas supply pressure is 5" w.c. for natural gas.

Gas input must never exceed the input capacity shown on the rating plate. **The furnace is equipped for natural gas rated inputs with manifold pressure of 3.5" w.c.**

The manifold pressure can be measured by shutting off the gas, removing the pipe plug in the downstream side of the gas valve, and connecting a water manometer or gauge. **Under no circumstances should the final**

manifold pressure vary more than 0.3" w.c. from the above specified pressures. To adjust the regulator, turn the adjusting screw on the regulator clockwise to increase pressure and input or counterclockwise to decrease pressure and input. See Figure 6 to assist in locating the regulator on the gas valve.

Check the furnace rate by observing the gas meter, making sure all other gas appliances are turned off. The test hand on the meter should be timed for at least one revolution, noting the number of seconds per revolution. The heating value of the gas can be obtained from the local utility.

$$\text{BTU/HR Input} = \frac{\text{Cubic Feet per Revolution}}{\text{\# Seconds per Revolution}} \times 3600 \times \text{Heating Value}$$

For example, by actual measurement, it takes 38 seconds for the hand on the 1-cubic foot dial to make a revolution with a 100,000 BTU/HR furnace running. The result is 99,750 BTU/HR, which is close to the 100,000 BTU/HR rating of the furnace.

Manifold Gas Pressure Adjustment Regulator – LP/ Propane Gas

LP/propane units require a LPG regulator on both the gas valve and on the LP/propane tank.

IMPORTANT: For purpose of input adjustment, the minimum permissible gas supply pressure (inlet side of gas valve) is 11" w.c. for LP/propane.

If at any time ignition is slow and burner does not seem to be operating correctly, check manifold pressure (outlet side of the gas valve). **It should be 10" to 10.5" w.c. pressure for LP/propane.**

The furnace is designed to obtain rated input at 10" w.c. manifold pressure for propane.

High Altitude

The unit is rated for elevations up to 4500 feet with no modifications. For elevations above 4500 feet, refer to the latest edition of the National Fuel Gas Code ANSI Z223.1/ NFPA 54 or the latest edition of the Canadian Natural Gas and Propane Installation Code CAN/CGA B149.1 and B149.2 for further details.

To check this pressure:

1. Slide the gas valve switch to the "OFF" position (see Figure 6).
2. Remove plug on valve marked "OUTLET PRESSURE."
3. Install a water manometer.
4. Slide the gas valve switch to the "ON" position and initiate a call for heat. If manifold pressure must be adjusted, remove cap from pressure regulator and turn adjustment screw clockwise to increase pressure or counterclockwise to reduce pressure.
5. After checking pressure, turn gas off, remove manometer fitting, and replace pipe plug and regulator cap.
6. Put furnace in operation and check plug for leaks using soapy solution.

Burner and Burner Orifice Instructions

To check or change burners or burner orifices:

1. **Close the main manual gas shutoff valve and turn off all power to unit.**
2. Remove the burner access panel.
3. Disconnect the union in the gas supply line upstream of the gas valve and downstream of the manual shutoff valve.
4. Label wires going to the gas valve, then disconnect the wires.
5. To change orifice:
   a. Remove screws that fasten the manifold to the burner box assembly and remove the manifold.
   b. Replace the burner orifices with those provided. Torque to 75-90 in-lbs. Do not use thread sealant.
   c. To reassemble: Reverse above steps, making sure orifices are inserted into the orifice holders on the back end of the burners, and that burners are level and centered on each burner opening in the vest panel.
6. To remove or service burners:
   a. Label and disconnect the wires to the rollout switch and disconnect the igniter and flame sensor leads at the ignition control.
   b. Remove the screws that secure the burner box assembly to the vest panel and remove the assembly from the unit.
   c. Remove the screws that fasten the burner rack and bottom shield assembly to the burner box. Burners are now accessible for removal.
   d. To Reassemble: Reverse above steps.
7. After reassembly of all parts is complete and all wires are reconnected, open the main manual gas shutoff valve; check for and correct any gas leaks. Turn electrical power on, initiate a call for heat, and check for proper burner operation.
8. Install burner access panel.

Operation

Cooling System

The cooling system is factory-charged with R-454B. The compressor is hermetically sealed and base-mounted with rubber-insulated bolts.

Cooling Sequence of Operation

When the thermostat calls for cooling, R is closed to Y (see the wiring diagrams). This action completes the low voltage control circuit, energizing the compressor, condenser fan motor, and blower motor.

Unit compressors have internal protection. In the event there is an abnormal rise in the temperature of the compressor, the protector will open and cause the compressor to stop.

A combustion air inducer operates for the first 10 seconds of every cooling cycle to prevent insects from nesting in the flue outlet.

Blower Delay – Cooling

The circulating air blower is controlled by a timing circuit in the integrated blower/ignition control. Timings are not adjustable. Blower "ON" delay is 5 seconds after the compressor starts and blower "OFF" timing is 60 seconds after the compressor shuts down.

NOTE: *There is no blower OFF delay when there is a call for G (fan only).*

Cooling System Performance

This equipment is a self-contained, factory-optimized refrigerant system. The unit should not require adjustments to system charge when properly installed. If unit performance is questioned, perform the following checks.

Table 4.

Cooling System Performance Values		
Model	**Suction Superheat +/- 3°**	**Liquid Subcooling +/- 2°**
2 Ton	13	
2.5 Ton	15	
3 Ton	15	
3.5 Ton	13	
4 Ton	14	
5 Ton	16	
Based on outdoor ambient temperature of 82°F, and indoor entering air of 80°F db, 67°F wb.		

Ensure unit is installed per manufacturer's instructions and that line voltage and air flow are correct. Refer to Table 4 for proper performance value. The indoor metering device varies by model. When checking performance of a unit using an orifice for metering, refer to the suction superheat value to judge performance. When checking performance of a unit that uses an expansion valve for metering, refer to the subcooling value to judge system performance. If the measured performance value varies from table value allowance, check internal seals, service panels and duct work for air leaks, as well as restrictions and blower speed settings. If unit performance remains questionable, remove system charge, evacuate to 500 microns, and weigh in refrigerant to nameplate charge. It is critical that the exact charge is re-installed. Failure to comply will compromise system performance. If unit performance is still questionable, check for refrigerant-related problems, such as blocked coil or circuits, malfunctioning metering device or other system components.

Continuous Fan

With the proper thermostat and sub-base, continuous blower operation is possible by closing the R to G circuit. Cooling blower delay is also functional in this mode.

Heating Sequence of Operation

When the thermostat calls for heating, R is closed to W. The following describes the gas heating sequence of operation.

1. A call for heat from the room thermostat starts the combustion air blower and the circulating air blower.
2. When the speed of the combustion air blower reaches proper RPM, the pressure switch closes, initiating a pre-purge period (30 seconds nominal).
3. When the pre-purge period has expired, the ignition control energizes the main gas valve and spark electrode for a period of 10 seconds.
4. If the flame sensor does not sense that a flame has been established in the 10-second interval, then the ignition control will de-energize the gas valve, and begins a 30 second inter-purge period, then initiates another trial for ignition.
5. The ignition control is designed to repeat this "trial for ignition" a total of three times. If, at the end of the third trial, flame still has not been established, then the ignition control will try to light again 1 hour later. The 1-hour retry is indefinite. The ignition control can be reset by interrupting the unit power or the thermostat circuit.
6. When W1 is energized from the room thermostat, the circulating air blower is energized after a 30 second blower on delay.
7. When the thermostat is satisfied, the combustion air blower and gas valve are de-energized. The circulation air blower will continue to run for a short period after the furnace is shut down.

Blower Delay – Heating

- The circulating air blower "OFF" delay is 180 seconds after shutting down the burners. This delay is not adjustable.
- The circulating air blower "ON" delay is 30 seconds after "W" signal is received to allow the furnace to warm up.

Safety Controls

The control circuit includes the following safety controls:

Limit Control

This control is located behind the heat exchanger access panel and is designed to open at abnormally high circulating air temperatures. It resets automatically. The limit control operates when a high temperature condition, caused by inadequate airflow, occurs. This closes the main gas valve.

Pressure Switch

If the combustion air blower should fail, the pressure switch prevents the spark electrode and gas valve from being energized.

Flame Sensor

If the ignition control does not receive a signal from the flame sensor indicating that the burners have established flame, the gas valve closes after the 10-second trial for ignition period.

Rollout Switch

The switch is located on the top of the burner box. In the event of a sustained main burner rollout, the rollout switch shuts off the ignition control and closes the main gas valve. To reset, push the button on top of the switch.

Secure Owner's Approval

When the system is functioning properly, secure the owner's approval. Show the owner the location of all disconnect switches and the thermostat. Instruct the owner on how to start and stop the unit and how to adjust temperature settings within the limitations of the system.

Prior to service, safety checks are necessary to minimize risk of ignition.

Service will be undertaken under a controlled procedure to minimize risk of flammable gas or vapor being present during maintenance.

Prior to service, area will be checked with an appropriate refrigerant detector.

Maintenance

Periodic inspection and maintenance normally consists of changing or cleaning the filters and cleaning the evaporator coil. On occasion, other components of the furnace may also require cleaning.

⚠ WARNING

Shut off all electrical power to the unit before conducting any maintenance procedures. Failure to do so could cause personal injury.

Filters

Filters are not supplied with the unit. Inspect once a month. Replace disposable or clean permanent type as necessary. **Do not replace permanent type with disposable.**

Motors

Indoor and outdoor fan and vent motors are permanently lubricated and require no maintenance.

Evaporator Coil

Dirt and debris should not be allowed to accumulate on the evaporator coil surface or other parts in the air circuit. Cleaning should be as often as necessary to keep coil clean. Use a brush, vacuum cleaner attachment, or other suitable means. If water is used to clean the coil, be sure the power to unit is shut off prior to cleaning. **Care should be used when cleaning the coil so that the coil fins are not damaged.**

Do not permit the hot condenser air discharge to be obstructed by overhanging structures or shrubs.

Condenser Coil

Clean condenser coil annually with water and inspect monthly during the cooling season.

Failure to follow instructions will cause damage to the unit. This unit is equipped with an aluminum coil. Aluminum coils may be damaged by exposure to solutions with a pH below 5 or above 9. The aluminum coil should be cleaned using potable water at a moderate pressure (less than 50psi). If the coil cannot be cleaned using water alone, recommends use of a coil cleaner with a pH in the range of 5 to 9. The coil must be rinsed thoroughly after cleaning. In coastal areas, the coil should be cleaned with potable water several times per year to avoid corrosive buildup (salt).

Burners

To clean the burners, first remove them from the furnace as explained in the Burner and Burner Orifice Instructions section. Vacuum and/or brush as required.

Vent Outlet

Visually inspect vent outlet periodically to make sure that there is no buildup of soot or dirt. If necessary, clean to maintain adequate opening to discharge flue products.

Heat Exchanger

With proper combustion adjustment, the heat exchanger of a gas-fired furnace will seldom need cleaning. Sooting of a gas appliance is highly irregular and once cleaned, the cause of the sooting must be determined. If the heat exchanger should become sooted, it can be cleaned as follows:

1. Remove the burner assembly as outlined in the Burner and Burner Orifice Instructions section.
2. Remove the combustion blower.
3. At the bottom of the heating section, remove the screws holding the flue collector box. Carefully remove the flue collector box without ripping the adjacent insulation.
4. Using a wire brush on a flexible wand, brush out the inside of each heat exchanger from the burner inlet and flue outlet ends.
5. Brush out the inside of the flue collector box.
6. Run the wire brush down the heat exchanger tubes from the flue collector end.
7. If soot buildup is excessive, remove the vent motor and clean the wheel and housing. Run the wire brush down the flue extension at the outlet of the vent housing.
8. After brushing is complete, blow all brushed areas with air. Vacuum as needed.
9. Replace parts in the reverse order they were removed in Steps 1 through 3.
10. When replacing the flue collector box, be careful so as not to tear the adjoining insulation.
11. Assure that all joints on the vent side of the combustion system are air tight. Apply a high temperature (+500°F) sealing compound where needed.

Control System Diagnostics

Table 5. Fault Codes

LED Status	Flashing Rate	Fault Description
Slow Flash	One flash per second	Normal operation: No call for heat
Fast Flash	Two flashes per second	Normal operation: Call for heat
2 Flash	Two flashes in second with 1-second pause	System lockout: Failed to detect or sustain flame
3 Flash	Three flashes in 1.5 seconds with 1-second pause	Pressure switch senses incorrect pressure or gas valve coil is open.
4 Flash	Four flashes in 2 seconds with 1-second pause	High limit or rollout switch open
5 Flash	Five flashes in 2.5 seconds with 1-second pause	Flame sensed and gas valve not energized
Steady	--	Internal failure: Micro-controller failure; self-check

Table 6. Cooling Performance - Gas/Electric Models

80 DB / 67 WB Deg. Return Air		Air Temperature Entering Evaporator Coil, Degree F										
Cooling Input (1000 BTU)	Pressure	65°	70°	75°	80°	85°	90°	95°	100°	105°	110°	115°
24	Suction +/-2 PSIG	110	115	119	121	125	127	130	134	136	138	139
30		122	124	126	128	130	133	133	136	138	140	141
36		127	128	130	131	132	133	133	135	136	137	139
42		121	123	126	128	130	132	134	136	138	140	142
48		125	127	130	132	135	137	137	141	143	145	145
60		115	118	120	123	125	127	129	131	132	134	135
24	Liquid +/- 4 PSIG	219	237	256	275	296	316	340	362	386	411	437
30		226	244	262	281	301	326	345	369	394	420	447
36		226	246	266	288	310	334	361	383	410	437	466
42		233	252	271	291	312	334	357	375	402	433	461
48		244	263	283	304	326	348	369	395	420	447	475
60		231	248	268	288	310	332	356	381	405	433	458
24	Superheat +/-2 DEG F	25	24	22	20	18	16	13	11	8	5	3
30		21	19	17	16	14	13	10	9	8	5	4
36		13	12	12	12	11	11	11	11	11	11	11
42		22	20	19	18	17	15	13	10	4	6	5
48		24	22	21	20	18	17	14	13	11	9	2
60		23	21	20	18	15	13	10	7	6	5	5

Table 7. Blower Performance

Model	Blower Tap	CFM @ Ext. Static Pressure in. wc without Filter, Dry Coil									
		0.1	0.2	0.3	0.4	0.5	0.6	0.7	0.8	0.9	1.0
24	TAP 1	610	560	525	485	430	N/A	N/A	N/A	N/A	N/A
	TAP 2	820	795	760	720	690	650	615	575	540	470
	TAP 3	960	925	885	850	815	780	745	710	675	635
30	TAP 1	850	820	780	745	710	680	630	590	550	515
	TAP 2	1040	1000	970	935	900	875	845	815	770	735
	TAP 3	1140	1105	1075	1045	1015	1000	965	925	890	825
36	TAP 1	850	800	750	700	645	600	550	480	435	N/A
	TAP 2	1245	1210	1175	1140	1100	1065	1025	975	920	845
	TAP 3	1390	1355	1320	1285	1250	1205	1165	1125	1050	875
42	TAP 1	800	720	640	550	475	390	310	N/A	N/A	N/A
	TAP 2	1470	1410	1360	1300	1260	1210	1155	1095	1000	940
	TAP 3	1600	1555	1510	1470	1430	1390	1340	1265	1210	1155
48	TAP 1	1145	1075	1000	930	850	790	740	670	570	490
	TAP 2	1675	1630	1600	1540	1490	1440	1390	1300	1230	1125
	TAP 3	1775	1735	1700	1660	1605	1555	1515	1455	N/A	N/A
60	TAP 1	1045	970	895	820	745	665	580	480	N/A	N/A
	TAP 2	1855	1810	1770	1725	1680	1630	1595	1550	N/A	N/A
	TAP 3	1965	1920	1875	1835	1785	1750	1710	1665	1615	1570

NOTE: *This appliance is tested to 0.58 static with a filter and 0.5 static without a filter*.

Table 8. Minimum Circulation Airflow

Charge (oz)	60 - 80	80 - 100	100 - 120	120 - 140	140 - 160
Qmin (CFM)	135	169	203	237	271

Refrigerant Detection System

Figure 7. Example of Clear, Unobstructed Sensor Inlet

Sensor Maintenance

It is recommended to check the state of the sensor every 6 months, at the beginning of each cooling and heating season.

- Ensure that the sensor opening is clear and free of debris.
- Check that the sensor cable is in good condition.
- DO NOT use abrasive cleaning solutions or detergents to clean sensor opening.
- DO NOT use flammable compressed air solutions to clean the sensor opening.
- DO NOT vacuum sensor inlet opening, as this could cause damage to the sensor internal components.
- Replace sensor if the opening is not clean or free of debris.
- When cleaning the evaporator coil, remove sensor from the coil. Follow recommended coil cleaning guidelines as described in installation instructions.

Modes of Operation

The modes of operation for the RDS Non-Communicating Blower Control Board are Initializing, Normal, Leak Detected, and Fault.

Initializing

The RDS Non-Communicating Blower Control Board is establishing connection with the refrigerant detection sensor and is completing an initial five (5) minute purge sequence.

Normal

The HVAC system is functioning normally. The RDS Non-Communicating Blower Control Board has not detected a refrigerant leak.

Leak Detected

When the RDS Non-Communicating Blower Control Board detects a refrigerant leak:

The RDS Non-Communicating Blower Control Board shuts off the (R) input (24VAC power) to the thermostat, which de-energizes the outdoor unit compressor and heat sources, such as gas and/or electric strip heat. No heating or cooling demands will be met.

The RDS Non-Communicating Blower Control Board activates the blower (high speed). The blower purges refrigerant from the cabinet, plenum, and ductwork.

After the RDS Non-Communicating Blower Control Board determines the refrigerant levels are below the safety threshold, the blower will continue to function for an additional seven (7) minutes.

After the blower sequence is complete, the HVAC system resumes normal operation.

***NOTE** – The HVAC system may not maintain a cooling or heating setpoint if a significant leak exists. Any refrigerant leaks that remain unaddressed for an extended time may cause the HVAC system to shut down on a low refrigerant pressure limit condition.*

Fault

When a fault is detected within the RDS Non-Communicating Blower Control Board, the indoor unit blower engages and remains engaged at a constant output until the fault is cleared.

Diagnostic Codes

The RDS Non-Communicating Blower Control Board is equipped with a multicolor LED within its enclosure. The LED signals the state of the RDS Non-Communicating Blower Control Board.

See Table 9 to review the diagnostic codes.

Table 9. LED Diagnostic Codes

State	LED Diagnostic Code	Action
Initializing	Flashing green[1]	Not Applicable
Monitoring	Solid green with blue flash[2]	Not Applicable
Mitigating (Leak Detected)	Flashing blue	Check coil tubes for leak. Repair the issue and restart the equipment.
Fault/Service	Solid blue, interrupted by issue flash code	Refer to Table 10 for troubleshooting steps.

1. A rapid flash indicates the RDSC is in the process of sensor enumeration
2. A blue flash indicates the mitigation process has previously occurred.

Red LED Diagnostic Codes

Red diagnostic codes indicate a specific RDS Non-Communicating Blower Control Board issue. Yellow diagnostic codes indicate the sensor's position (if applicable).

Table 10. Red LED Diagnostic Codes

Red Flash	Applies to Individual Sensor(s)	Issue	Action
1	Yes	Sensor indicates fault	Replace the sensor (Cat. # 27J27)
2	No	Float Switch Active	Check if drain line float switch is installed.
3	Yes	Incompatible sensor type	Replace with a compatible sensor (Cat. # 27J27)
4	Yes	Sensor communications issue	Check sensor connection. Ensure connection is clean and tight.
5	No	R-input not available	Check for 24VAC power connection to the R terminal inputs on the RDSC. R-inputs must be energized for the RDSC to function.
6	No	Invalid configuration of sensor count	Verify the DIP switch setting is correct and matches the number of sensors being used.

Test Button Functionality

The RDS Non-Communicating Blower Control Board is equipped with a Test/Reset button. The Test button can be used to complete several functions, depending on the mode of operation of the RDS Non-Communicating Blower Control Board.

Table 11 lists the functions of the Test button during each mode of operation.

Table 11. Test Button Function

Mode of Operation	Press the Test Button to...
Normal	Trigger a leak detection response. Verify all equipment is wired correctly into the RDSC (after installation).
Leak Detected	Reset the RDSC to a normal mode of operation after a previous leak has been detected and purged from the HVAC system.
Fault	Reset the RDSC after troubleshooting and resolving a fault condition. If the fault is not resolved, the RDSC will enter the Fault mode again.

Test Button - Additional Functions

Table 12 lists the additional functions of the Test Button while the RDS Non-Communicating Blower Control Board is functioning within the states of Initializing, Monitoring, Leak Detection, Servicing and Fault. Refer to "Table 9. LED Diagnostic Codes" on the page previous to this one.

Table 12. Additional Button Functions

State	Press	Action
Initializing	Short	Skips remaining pre-purge after sensors are recognized by the RDSC
Initializing	Long	Reset control
Monitoring	Short	Clear purge-counter if prior mitigation has occurred; Test mitigation
Monitoring	Long	Reset control
Mitigating	Short	If testing mitigation, end test
Servicing	Short	Reevaluate fault condition - if cleared return to monitoring, otherwise update indicator
Servicing	Long	Reset control
Fault	Short	Reevaluate fault condition - if cleared return to monitoring, otherwise update indicator
Fault	Long	Reset control

Thermostat Compatibility

Thermostats that preserve memory settings are compatible with the RDS Non-Communicating Blower Control Board. Examples include:

- Battery-powered thermostats
- Analog thermostats
- Smart thermostats
- Late-model programmable thermostats
- *Early-generation digital and programmable thermostats may not retain the operation mode and temperature setpoints after a power outage.*

The following scenarios are likely to occur when home occupants are not available to adjust the thermostat setpoints as the system is recovering from leak detection and resuming normal operation:

- Heating could be lost during a cold night
- Cooling could be lost during a hot day
- The thermostat could reset to an incorrect temperature setpoint

Compatibility Verification

Complete the following process to determine whether the thermostat is compatible with the RDS Non-Communicating Blower Control Board.

1 - Change the thermostat's current setpoint and operating mode.

2 - Power cycle the breaker to the furnace.

***NOTE** – Wait five (5) minutes before supplying power to the furnace breaker.*

3 - Note whether the thermostat maintained its setpoints and operating mode.

a. If the thermostat maintained the settings, the thermostat is compatible with the RDS Non-Communicating Blower Control Board.

b. If the thermostat did not maintain its setpoint and/or operating mode, the thermostat is not compatible with the RDS Non-Communicating Blower Control Board. Recommend replacing with a compatible thermostat.

Additional Applications

In zoned applications, all dampers will remain open when the RDS Non-Communicating Blower Control Board is in Fault or Leak Detected mode. Normal heating and cooling demands are permissible, but the blower will remain engaged until the fault condition is addressed.

Zone HVAC System

If the RDS Non-Communicating Blower Control Board is installed in a zone HVAC system, the RDS Non-Communicating Blower Control Board will open all zone dampers if a leak is detected.

***NOTE** – Proper wiring of the zone panel to the RDS Non-Communicating Blower Control Board is required for all zone dampers to open.*

After the purge sequence is complete, the zone system will resume normal operation.

External Alarm

(*For applications with external alarms wired directly to the RDS Non-Communicating Blower Control Board.*)

The RDS Non-Communicating Blower Control Board triggers the external alarm system when it enters Leak Detected mode. For alarm notifications, the RDS Non-Communicating Blower Control Board provides a dry relay contact that is rated 3A at 30 VAC/DC.

Start Up Test Procedure

The RDS Non-Communicating Blower Control Board is equipped with a Test/Reset button, see “Test Button Functionality” on page 27. The system will then run through a purge sequence for five (5) minutes. After the purge sequence is complete, proceed to testing cooling demand and heating demand.

Cooling Demand

1 - Prompt a cooling demand at the thermostat.

2 - Press the Test button on the RDS Non-Communicating Blower Control Board.

The system then executes a leak detection response.

3 - Observe the following sequence:

a. The LED indicator flashes the sequence for leak detection (flashing blue).

b. The blower powers up.

c. The outdoor compressor powers down.

4 - Press the Test button to terminate the simulated Leak Detected mode upon test completion.

Heating Demand

1 - Prompt a heating demand at the thermostat.

2 - Press the Test Button on the RDS Non-Communicating Blower Control Board.

3 - Observe the following sequence:

a. The LED indicator flashes the sequence for leak detection (flashing blue).

b. The blower powers up.

c. The outdoor compressor powers down.

4 - Press the Test button to terminate the simulated Leak Detected mode upon test completion.

The installation of the RDS Non-Communicating Blower Control Board is complete after both sequences are successfully completed.

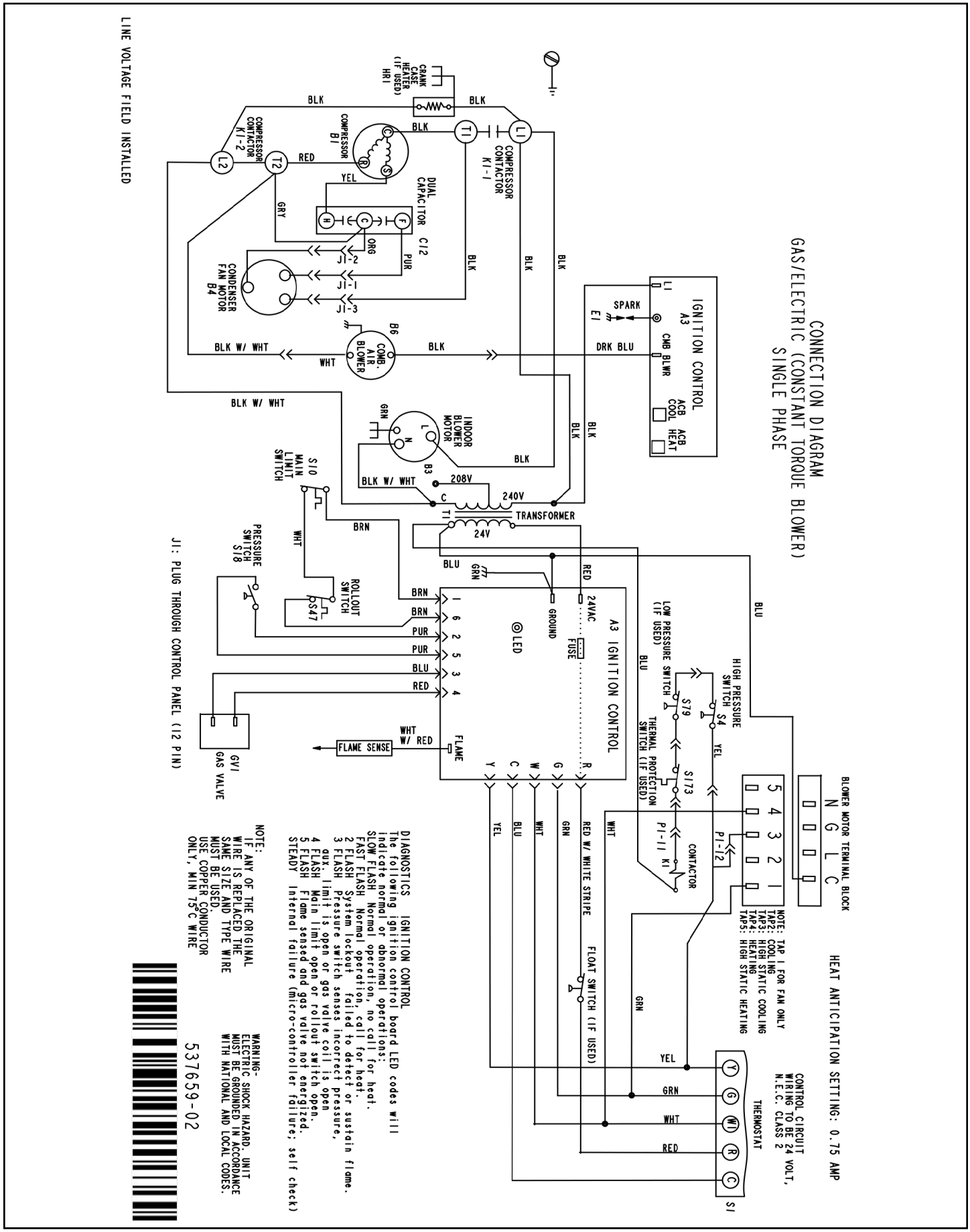

Figure 8. Wiring Diagram – Single Phase CT (2 to 2.5-ton)

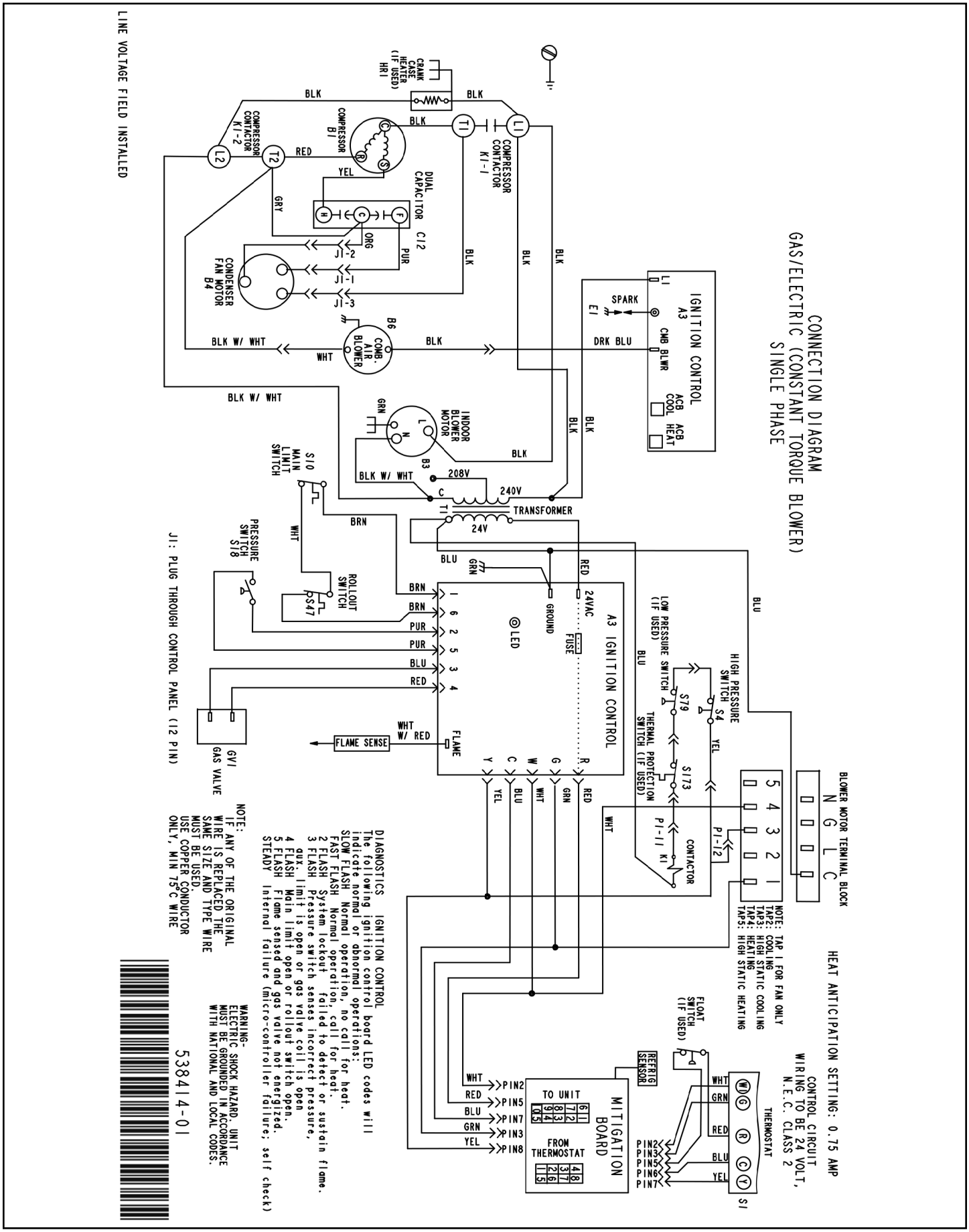

Figure 9. Wiring Diagram – Single Phase CT (3 to 5-ton)

Decommissioning

Before carrying out this procedure, it is essential that the technician is completely familiar with the equipment and all its detail. It is recommended good practice that all refrigerants are recovered safely.

Prior to the task being carried out, an oil and refrigerant sample shall be taken in case analysis is required prior to re-use of recovered refrigerant. It is essential that electrical power is available before starting decommissioning.

a) Become familiar with the equipment and its operation.

b) Isolate system electrically.

c) Before attempting the procedure, ensure that:

- mechanical handling equipment is available, if required, for handling refrigerant cylinders;
- all personal protective equipment is available and being used correctly;
- the recovery process is supervised at all times by a competent person;
- recovery equipment and cylinders conform to the appropriate standards.

d) Pump down refrigerant system, if possible.

e) If a vacuum is not possible, make a manifold so that refrigerant can be removed from various parts of the system.

f) Make sure that cylinder is situated on the scales before recovery takes place.

g) Start the recovery machine and operate in accordance with instructions.

h) Do not overfill cylinders (no more than 80% volume liquid charge).

i) Do not exceed the maximum working pressure of the cylinder, even temporarily.

j) When the cylinders have been filled correctly and the process completed, make sure that the cylinders and the equipment are removed from site promptly and all isolation valves on the equipment are closed off.

k) Recovered refrigerant shall not be charged into another REFRIGERATING SYSTEM unless it has been cleaned and checked.

NOTE: Equipment shall be labelled stating that is has been decommissioned and emptied of refrigerant. The label shall be dated and signed. For appliances containing FLAMMABLE REFRIGERANTS, ensure that there are labels on the equipment stating the equipment contains FLAMMABLE REFRIGERANT.