INSTALLATION INSTRUCTIONS

A97DF2EK & 97G2DFEK

Warm Air Gas Furnace
Downflow Air Discharge
Direct Vent & Non-Direct Vent

This manual must be left with the homeowner for future reference.

This is a safety alert symbol and should never be ignored. When you see this symbol on labels or in manuals, be alert to the potential for personal injury or death.

WARNING

Improper installation, adjustment, alteration, service or maintenance can cause property damage, personal injury or loss of life. Installation and service must be performed by a licensed professional installer (or equivalent), service agency or the gas supplier.

WARNING

This furnace is equipped with an ignition control factory enabled for use with Allied A2L refrigerant systems. Disabling the refrigerant detection functionality on A2L system is prohibited by safety codes. Refer to furnace installation instructions for non-A2L and non-Allied refrigerant system setup.

CAUTION

As with any mechanical equipment, personal injury can result from contact with sharp sheet metal edges. Be careful when you handle this equipment.

Table of Contents

Unit Dimensions 2
Parts Arrangement....3
Gas Furnace....4
Shipping and Packing List 4
Safety Information 4
General....6
Combustion, Dilution & Ventilation Air 7
Installation 9
Filters....12
Duct System 12
Venting Practices....15
Condensate Piping 30
Gas Piping....33
Electrical....35
Ignition Control 38
Low GWP Applications 41
Unit Start-Up....49
Other Unit Adjustments....52
Blower Performance....54
Service....56
Planned Service 57
Repair Parts List....57

Manufactured By
Allied Air Enterprises LLC
215 Metropolitan Drive
West Columbia, SC 29170

(P) 508622-02

Unit Dimensions

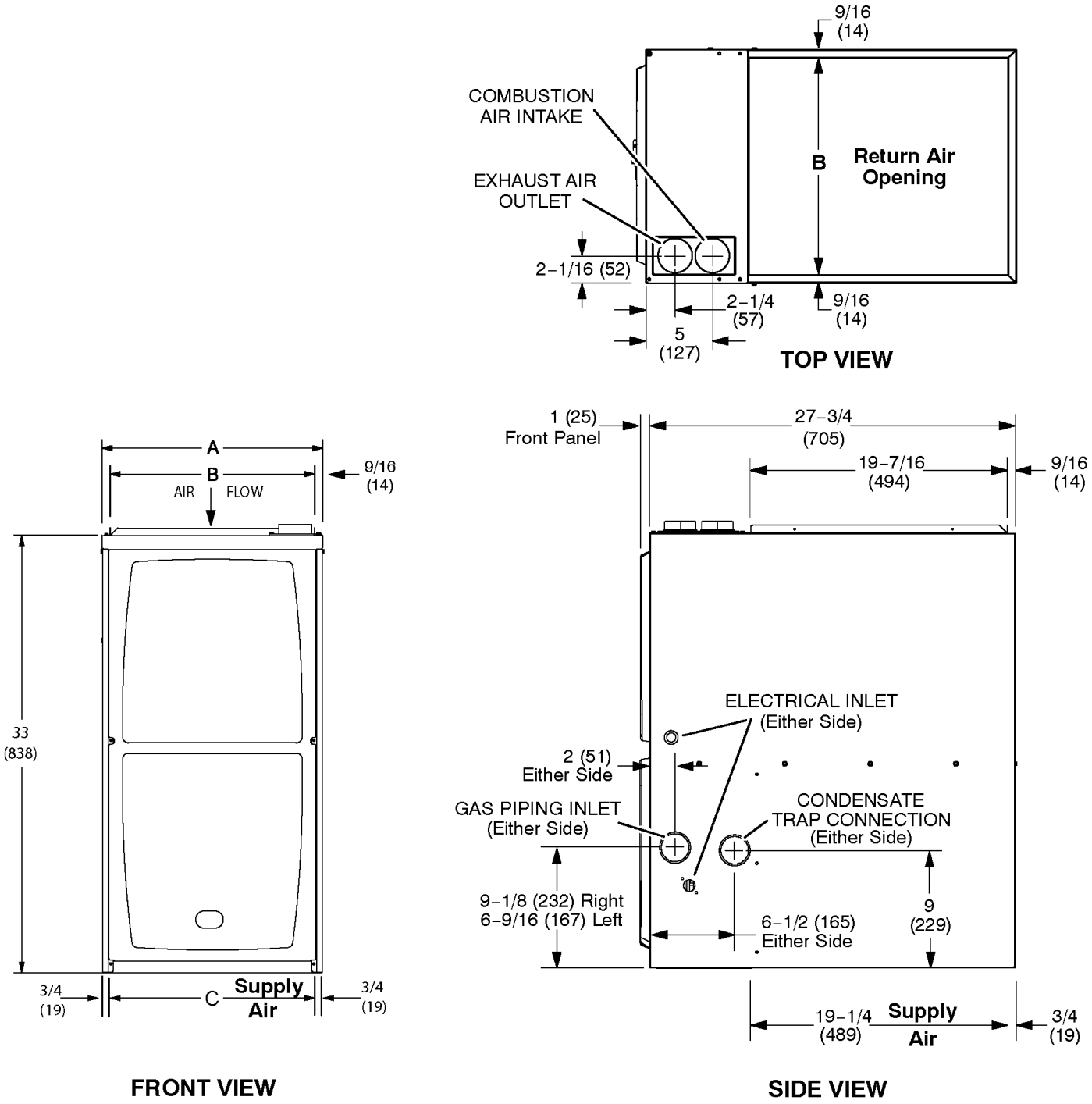

Model	Cooling Capacity	A		B		C	
		in.	mm	in.	mm	in.	mm
045-B	3 ton	17-1/2	446	16-3/8	416	16	406
070-B	4 ton						
090-C	4 ton	21	533	19-7/8	504	19-1/2	495
110-C	5 ton						

Parts Arrangement

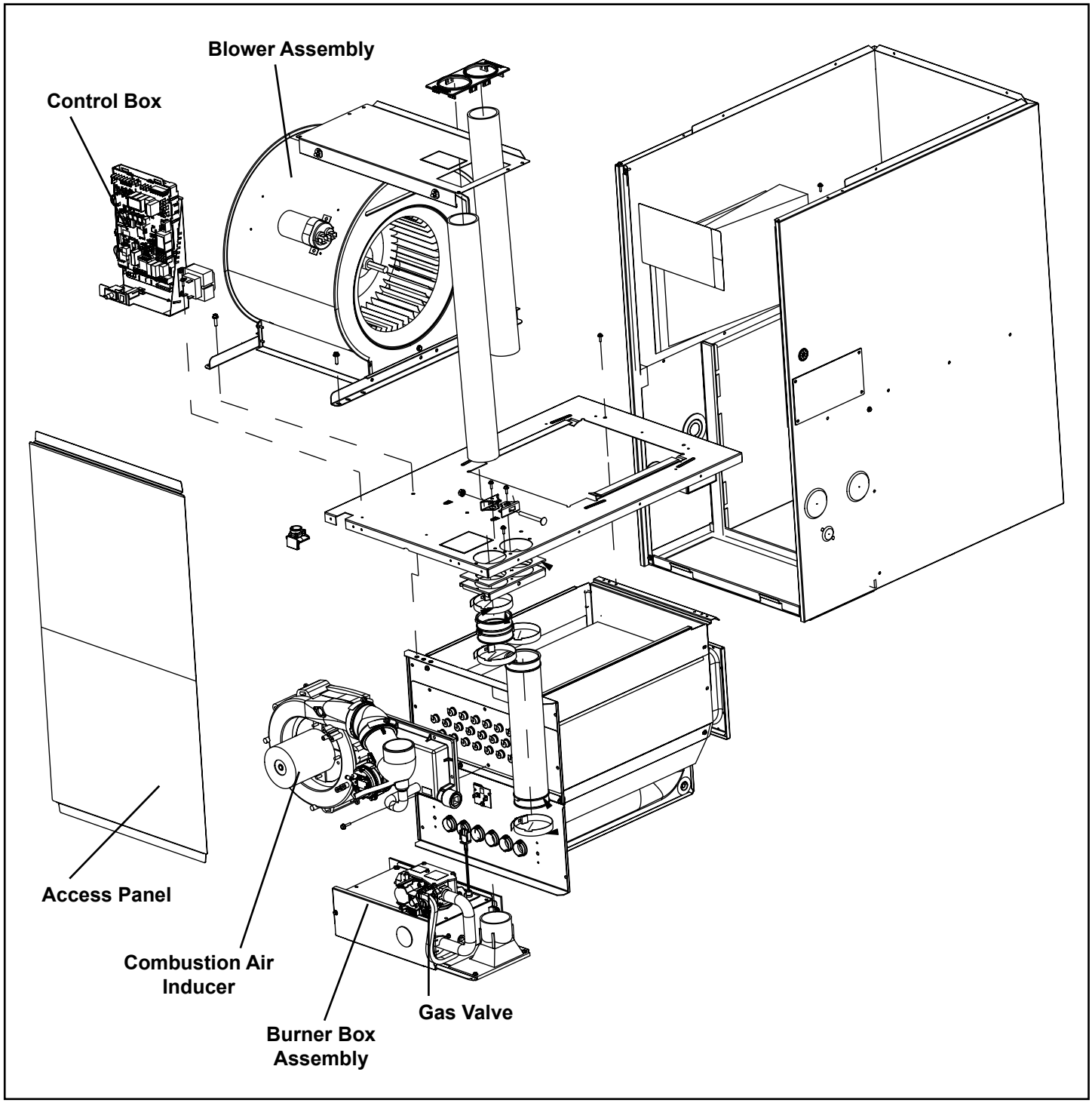

Figure 1.

Gas Furnace

This Category IV gas furnace is shipped ready for installation in the downflow position.

The furnace is equipped for installation in natural gas applications. A conversion kit (ordered separately) is required for use in LP/propane gas applications.

This unit can be installed as either a Direct Vent or a Non-Direct Vent gas central furnace.

NOTE: *In Direct Vent installations, combustion air is taken from outdoors and flue gases are discharged outdoors. Non-Direct Vent installations, combustion air is taken from indoors or ventilated attic or crawl space and flue gases are discharged outdoors. See Figure 2 and Figure 3 for application involving roof termination.*

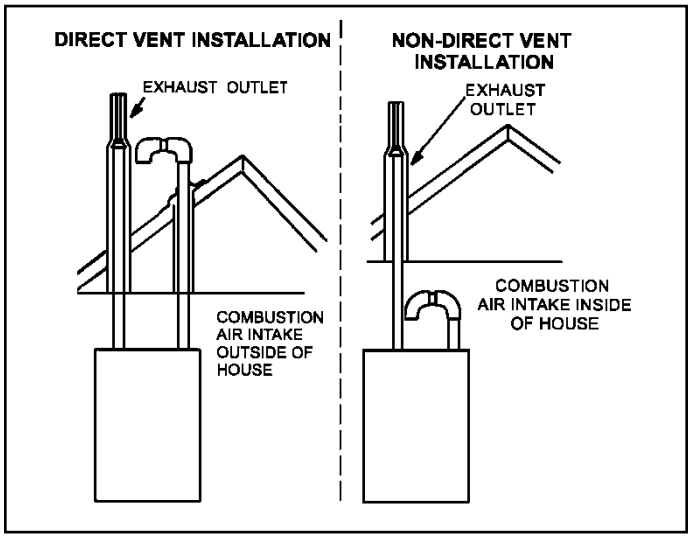

Figure 2.

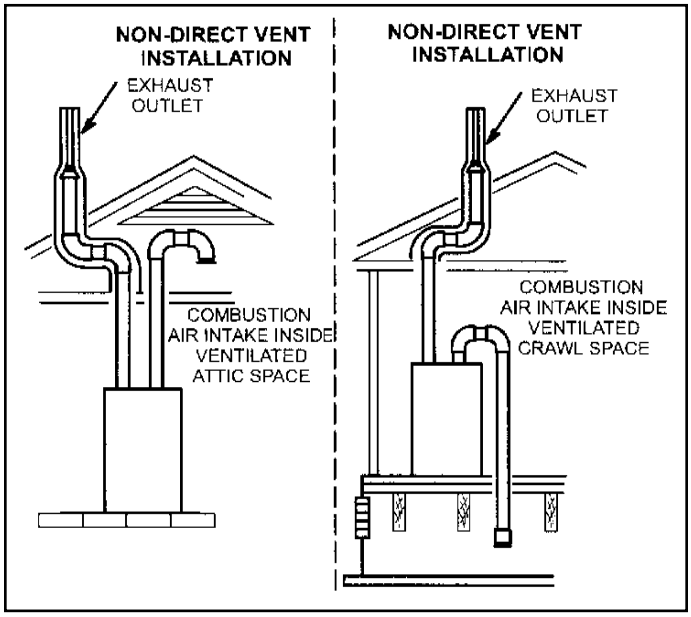

Figure 3.

Shipping and Packing List

Package 1 of 1 contains:

1 - Assembled Gas Unit

1 - Bag assembly containing the following:

- 1 - Snap bushing
- 1 - Snap Plug
- 1 - Wire tie
- 1 - Condensate trap
- 1 - Condensate trap cap
- 1 - Condensate trap clamp
- 1 - 2” diameter debris screen
- 1 - 3/4” Threaded street elbow

RDS Sensor kit can be ordered separately and is field installed.

Check equipment for shipping damage. If you find any damage, immediately contact the last carrier.

Please refer to specification sheets for available accessories.

Safety Information

⚠ WARNING

Improper installation, adjustment, alteration, service or maintenance can cause property damage, personal injury or loss of life. Installation and service must be performed by a licensed professional installer (or equivalent), service agency or the gas supplier.

⚠ CAUTION

As with any mechanical equipment, personal injury can result from contact with sharp sheet metal edges. Be careful when you handle this equipment.

⚠ DANGER

DANGER OF EXPLOSION!

There are circumstances in which odorant used with LP/propane gas can lose its scent. In case of a leak, LP/propane gas will settle close to the floor and may be difficult to smell. An LP/propane leak detector should be installed in all LP applications.

Use only the type of gas approved for use with this furnace. Refer to unit nameplate.

This unit is CSA International certified to ANSI Z21.47 and CSA 2.3 standards.

Building Codes

In the USA, installation of gas furnaces must conform with local building codes. In the absence of local codes, units must be installed according to the current National Fuel Gas Code (ANSI Z223.1/NFPA 54). The National Fuel Gas Code is available from the American National Standards Institute, Inc., 11 West 42nd Street, New York, NY 10036.

In Canada, installation must conform with current National Standard of Canada CSA-B149 Natural Gas and Propane Installation Codes, local plumbing or waste water codes and other applicable local codes.

In order to ensure proper unit operation in non-direct vent applications, combustion and ventilation air supply must be provided according to the current National Fuel Gas Code or CSA-B149 standard.

Locations and Clearances

This furnace is CSA International certified for installation clearances to combustible material as listed on the unit nameplate and in the table in Figure 15. Installers should also consider the greater of either accessibility/service clearances or fire protection clearances.

NOTE: *When furnace is installed on a combustible floor, a downflow combustible flooring base must be installed between the furnace and the floor.*

For installation in a residential garage, the furnace must be installed so that the burner(s) and the ignition source are located no less than 18 inches (457 mm) above the floor. The furnace must be located or protected to avoid physical damage by vehicles. When a furnace is installed in a public garage, hangar, or other building that has a hazardous atmosphere, the furnace must be installed according to recommended good practice requirements and current National Fuel Gas Code or CSA B149 standards.

NOTE: *Furnace must be adjusted to obtain a temperature rise within the range specified on the unit nameplate. Failure to do so may cause erratic limit operation and premature heat exchanger failure.*

This gas furnace must be installed so that its electrical components are protected from water.

Installed in Combination with a Cooling Coil

When this furnace is used with cooling units (Figure 4), it shall be installed in parallel with, or on the upstream side of, cooling units to avoid condensation in the heating compartment. With a parallel flow arrangement, a damper (or other means to control the flow of air) must adequately prevent chilled air from entering the furnace. If the damper is manually operated, it must be equipped to prevent operation of either the heating or the cooling unit, unless it is in the full HEAT or COOL setting.

When installed, this furnace must be electrically grounded according to local codes. In addition, in the United States, installation must conform with the current National Electric Code, ANSI/NFPA No. 70. The National Electric Code (ANSI/NFPA No. 70) is available from the following address:

National Fire Protection Association
1 Battery March Park
Quincy, MA 02269

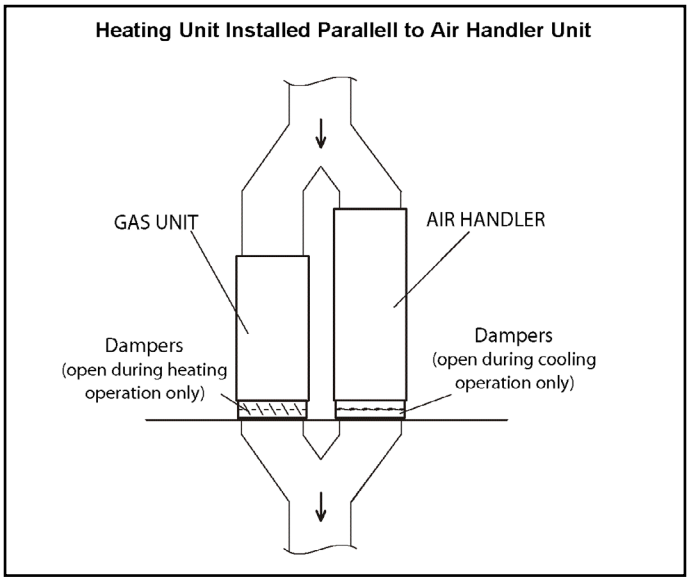

Figure 4.

In Canada, all electrical wiring and grounding for the unit must be installed according to the current regulations of the Canadian Electrical Code Part I (CSA Standard C22.1) and/or local codes.

NOTE: *This furnace is designed for a minimum continuous return air temperature of 60°F (16°C) or an intermittent operation down to 55°F (13°C) dry bulb for cases where a night setback thermostat is used. Return air temperature must not exceed 85°F (29°C) dry bulb.*

This gas furnace may be installed in alcoves, closets, attics, basements, garages, and utility rooms.

This furnace design has NOT been CSA certified for installation in mobile homes, recreational vehicles, or outdoors.

Never use an open flame to test for gas leaks. Check all connections using a commercially available soap solution made specifically for leak detection.

Use of Furnace as a Construction Heater

Units may be used for heating of buildings or structures under construction, if the following conditions are met to ensure proper operation.

DO NOT USE THE UNIT FOR CONSTRUCTION HEAT UNLESS ALL OF THE FOLLOWING CRITERIA ARE MET:

a. Furnace must be in its final location. The vent system must be permanently installed per these installation instructions.

b. Furnace must be installed as a two pipe system and one hundred percent (100%) outdoor air must be provided for combustion air requirements during construction.

c. A room thermostat must control the furnace. The use of fixed jumpers that will provide continuous heating is prohibited.

d. The input rate and temperature rise must be set per the furnace rating plate.

e. Supply and Return air ducts must be provided and sealed to the furnace. Return air must be terminated outside of the space where furnace is installed.

f. Return air temperature range between 60°F (16°C) and 80°F (27°C) must be maintained.

g. MERV 11 or greater air filters must be installed in the system and must be regularly inspected and maintained (e.g., regular static checks and replaced at end of life) during construction.

h. Blower and vestibule access panels must be in place on the furnace at all times.

i. The furnace heat exchanger, components, duct system, and evaporator coils must be thoroughly cleaned following final construction clean−up.

j. Air filters must be replaced upon construction completion.

k. All furnace operating conditions (including ignition, input rate, temperature rise and venting) must be verified in accordance with these installation instructions.

l. The refrigerant leak detection sensor must be inspected for dust/debris deposits. Please refer to the evaporator coil and/or refrigerant detection sensor kit instructions for additional information.

EQUIPMENT MAY EXPERIENCE PREMATURE COMPONENT FAILURE AS A RESULT OF FAILURE TO FOLLOW THE ABOVE INSTALLATION INSTRUCTIONS. FAILURE TO FOLLOW THE ABOVE INSTALLATION INSTRUCTIONS VOIDS THE MANUFACTURER'S EQUIPMENT LIMITED WARRANTY. ALLIED AIR DISCLAIMS ALL LIABILITY IN CONNECTION WITH INSTALLER'S FAILURE TO FOLLOW THE ABOVE INSTALLATION INSTRUCTIONS.

NOTWITHSTANDING THE FOREGOING, INSTALLER IS RESPONSIBLE FOR CONFIRMING THAT THE USE OF CONSTRUCTION HEAT IS CONSISTENT WITH THE POLICIES AND CODES OF ALL REGULATING ENTITIES. ALL SUCH POLICIES AND CODES MUST BE ADHERED TO.

General

These instructions are intended as a general guide and do not supersede local codes in any way. Consult authorities having jurisdiction before installation.

In addition to the requirements outlined previously, the following general recommendations must be considered when installing one of these furnaces:

- Place the furnace as close to the center of the air distribution system as possible. The furnace should also be located close to the vent termination point.
- When the furnace is installed in non-direct vent applications, do not install the furnace where drafts might blow directly into it. This could cause improper combustion and unsafe operation.
- When the furnace is installed in a non-direct vent applications, do not block the furnace combustion air opening with clothing, boxes, doors, etc. Air is needed for proper combustion and safe unit operation.
- When the furnace is installed in an attic or other insulated space, keep insulation away from the furnace.
- When the furnace is installed in an unconditioned space, consider provisions required to prevent freezing of the condensate drain system.

NOTE: *The Commonwealth of Massachusetts stipulates these additional requirements:*

- Gas furnaces shall be installed by a licensed plumber or fitter only.
- The gas cock must be "T handle" type.
- When a furnace is installed in an attic, the passageway to and service area surrounding the equipment shall be floored.

⚠ CAUTION

These units should not be installed in areas normally subject to freezing temperatures.

Combustion, Dilution & Ventilation Air

If this unit is installed as a Non-Direct Vent Furnace, follow the guidelines in this section.

NOTE: *In Non-Direct Vent Installations, combustion air is taken from indoors and flue gases are discharged outdoors.*

⚠ WARNING

Insufficient combustion air can cause headaches, nausea, dizziness or asphyxiation. It will also cause excess water in the heat exchanger resulting in rusting and premature heat exchanger failure. Excessive exposure to contaminated combustion air will result in safety and performance related problems. Avoid exposure to the following substances in the combustion air supply:

- Permanent wave solutions
- Chlorinated waxes and cleaners
- Chlorine base swimming pool chemicals
- Water softening chemicals
- De-icing salts or chemicals
- Carbon tetrachloride
- Halogen type refrigerants
- Cleaning solvents (such as perchloroethylene)
- Printing inks, paint removers, varnishes, etc.
- Hydrochloric acid
- Cements and glues
- Antistatic fabric softeners for clothes dryers
- Masonry acid washing materials

In the past, there was no problem in bringing in sufficient outdoor air for combustion. Infiltration provided all the air that was needed. In today's homes, tight construction practices make it necessary to bring in air from outside for combustion. Take into account that exhaust fans, appliance vents, chimneys, and fireplaces force additional air that could be used for combustion out of the house. If sufficient combustion air is not available, the furnace or other appliance will operate inefficiently and unsafely.

Unless outside air is brought into the house for combustion, negative pressure (outside pressure is greater than inside pressure) will build to the point that a down draft can occur in the furnace vent pipe or chimney. As a result, combustion gases enter the living space creating a potentially dangerous situation.

In addition to providing combustion air, fresh outdoor air dilutes contaminants in the indoor air. These contaminants may include bleaches, adhesives, detergents, solvents and other contaminants which can corrode furnace components.

⚠ CAUTION

Do not install the furnace in a corrosive or contaminated atmosphere. Meet all combustion and ventilation air requirements, as well as all local codes.

In the absence of local codes concerning air for combustion and ventilation, use the guidelines and procedures in this section to install these furnaces to ensure efficient and safe operation. You must consider combustion air needs and requirements for exhaust vents and gas piping. A portion of this information has been reprinted with permission from the National Fuel Gas Code (ANSI-Z223.1/NFPA 54). This reprinted material is not the complete and official position of ANSI on the referenced subject, which is represented only by the standard in its entirely.

In Canada, refer to the CSA B149 Installation codes.

The requirements for providing air for combustion and ventilation depend largely on whether the furnace is installed in an unconfined or a confined space.

Unconfined Space

An unconfined space is an area such as a basement or large equipment room with a volume greater than 50 cubic feet (1.42 m³) per 1,000 Btu (.29 kW) per hour of the combined input rating of all appliances installed in that space. This space also includes adjacent rooms which are not separated by a door. Though an area may appear to be unconfined, it might be necessary to bring in outdoor air for combustion if the structure does not provide enough air by infiltration. If the furnace is located in a building of tight construction with weather stripping and caulking around the windows and doors, follow the procedures in the "Air from Outside" section.

Confined Space

A confined space is an area with a volume less than 50 cubic feet (1.42 m³) per 1,000 Btu (.29 kW) per hour of the combined input rating of all appliances installed in that space. This definition includes furnace closets or small equipment rooms.

When the furnace is installed so that supply ducts carry air circulated by the furnace to areas outside the space containing the furnace, the return air must be handled by ducts which are sealed to the furnace casing and which terminate outside the space containing the furnace. This is especially important when the furnace is mounted on a platform in a confined space such as a closet or small equipment room. Even a small leak around the base of the unit at the platform or at the return air duct connection can cause a potentially dangerous negative pressure condition. Air for combustion and ventilation can be brought into the confined space either from inside the building or from outside.

Air from Inside

If the confined space that houses the furnace adjoins a space categorized as unconfined, air can be brought in by providing two permanent openings between the two spaces. Each opening must have a minimum free area of 1 square inch (645 mm²) per 1,000 Btu (.29 kW) per hour of total input rating of all gas-fired equipment in the confined space. Each opening must be at least 100 square inches (64516 mm²). One opening shall be within 12 inches (305 mm) of the top of the enclosure and one opening within 12 inches (305 mm) of the bottom. See Figure 5.

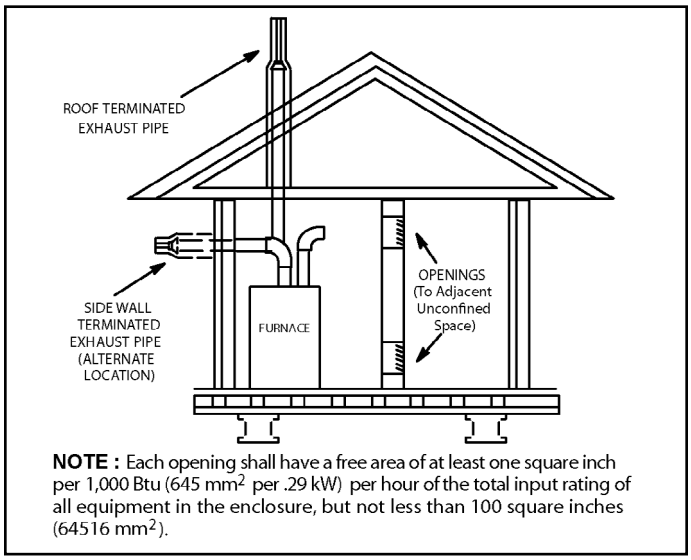

Figure 5. Equipment in Confined Space - All Air from Inside

Air from Outside

If air from outside is brought in for combustion and ventilation, the confined space shall be provided with two permanent openings. One opening shall be within 12" (305 mm) of the top of the enclosure and one within 12" (305 mm) of the bottom. These openings must communicate directly or by ducts with the outdoors or spaces (crawl or attic) that freely communicate with the outdoors or indirectly through vertical ducts. Each opening shall have a minimum free area of 1 square inch per 4,000 Btu (645 mm² per .59 kW) per hour of the total input rating of all equipment in the enclosure (See Figure 6 and Figure 7).

It is also permissible to bring air for combustion from a ventilated attic (Figure 8) or ventilated crawl space (Figure 9).

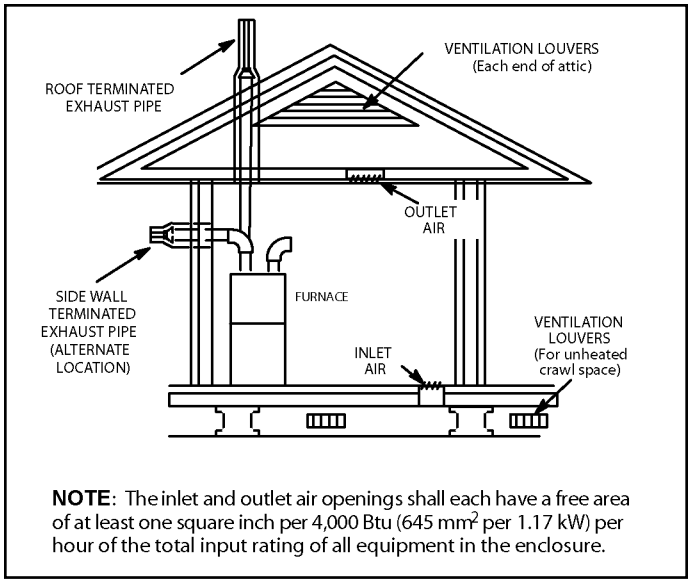

Figure 6. Equipment in Confined Space - All Air from Outside (Inlet Air from Crawl Space and Outlet Air to Ventilated Attic)

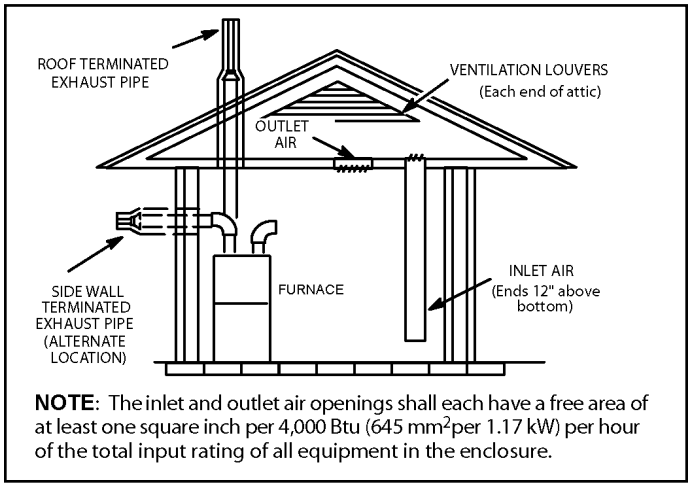

Figure 7. Equipment in Confined Space - All Air from Outside (All Air Through Ventilated Attic)

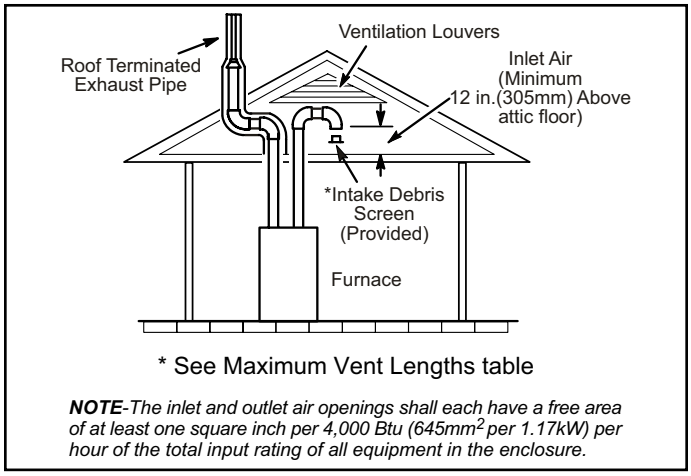

Figure 8. Equipment in Confined Space (Inlet Air from Ventilated Attic & Outlet Air to Outside)

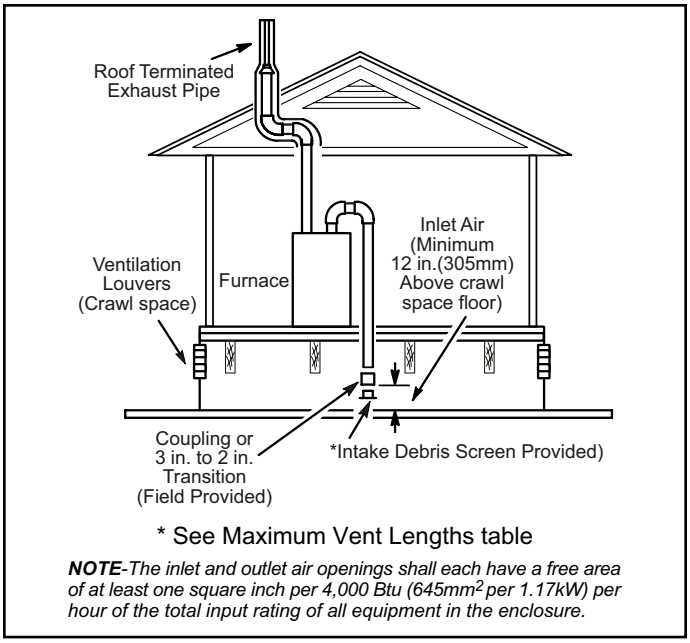

Figure 9. Equipment in Confined Space (Inlet Air from Ventilated Crawlspace & Outlet Air to Outside)

When communicating with the outdoors through horizontal ducts, each opening shall have a minimum free area of 1 square inch (645 mm²) per 2,000 Btu (.56 kW) per hour of the total input rating of all equipment in the enclosure. See Figure 10.

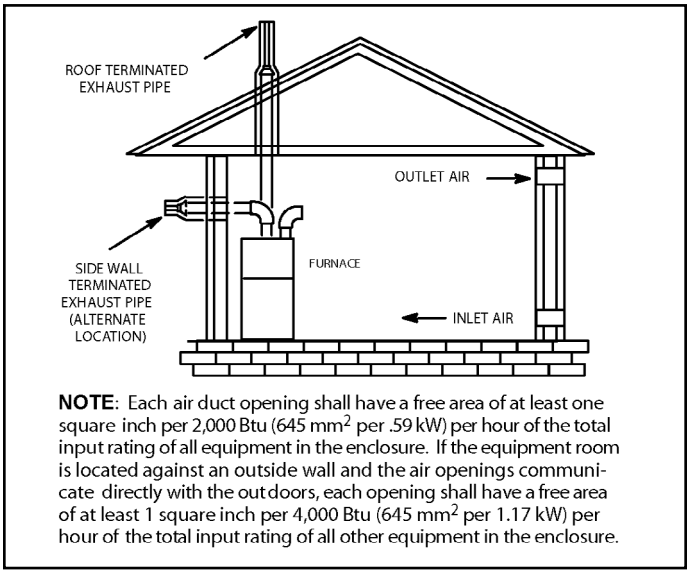

Figure 10. Equipment in Confined Space - all Air from Outside

When ducts are used, they shall be of the same cross-sectional area as the free area of the openings to which they connect. The minimum dimension of rectangular air ducts shall be no less than 3 inches (75 mm). In calculating free area, the blocking effect of louvers, grilles, or screens must be considered. If the design and free area of protective covering is not known for calculating the size opening required, it may be assumed that wood louvers will have 20 to 25 percent free area and metal louvers and grilles will have 60 to 75 percent free area. Louvers and grilles must be fixed in the open position or interlocked with the equipment so that they are opened automatically during equipment operation.

⚠ WARNING

If this unit is being installed in an application with combustion air coming in from a space serviced by an exhaust fan, power exhaust fan, or other device which may create a negative pressure in the space, take care when sizing the inlet air opening. The inlet air opening must be sized to accommodate the maximum volume of exhaust air as well as the maximum volume of combustion air required for all gas appliances serviced by this space.

Installation

Setting Equipment

⚠ WARNING

Do not install the furnace on its front, back or in the horizontal position. See Figure 13. Do no connect the return air ducts to the back of the furnace. Doing so will adversely affect the operation of the safety control devices, which could result in personal injury or death.

Select a location that allows for the required clearances that are listed on the unit nameplate. Also consider gas supply connections, electrical supply, vent connection, condensate trap and drain connections, and installation and service clearances [24 inches (610 mm) at unit front]. The unit must be level from side to side. Tilt the unit slightly (maximum 1/2 in. from level) from back to front to aid in the draining of the heat exchanger. See Figure 12.

Shipping Bolt Removal

NOTE: *Units with a 1/2 hp blower motors are equipped with three flexible legs and one rigid leg. The rigid leg is equipped with a shipping bolt and a flat white plastic washer (rather than the rubber mounting grommet used with a flexible mounting leg). See Figure 11. The bolt and washer must be removed before the furnace is placed into operation. After the bolt and washer have been removed, the rigid leg will not touch the blower housing.*

Allow for clearances to combustible materials as indicated on the unit nameplate. Minimum clearances for closet or alcove installations are shown in Figure 15.

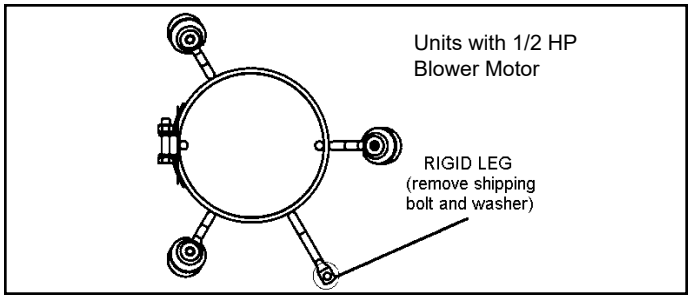

Figure 11.

⚠ WARNING

Improper installation of the furnace can result in personal injury or death. Combustion and flue products must never be allowed to enter the return air system or air in the living space. Use sheet metal screws and joint tape to seal return air system to furnace.

In platform installations with furnace return, the furnace should be sealed airtight to the return air plenum. A door must never be used as a portion of the return air duct system. The base must provide a stable support and an airtight seal to the furnace. Allow absolutely no sagging, cracks, gaps, etc.

For no reason should return and supply air duct systems ever be connected to or from other heating devices such as a fireplace or stove, etc. Fire, explosion, carbon monoxide poisoning, personal injury and/or property damage could result.

⚠ WARNING

Blower access panel must be securely in place when blower and burners are operating. Gas fumes, which could contain carbon monoxide, can be drawn into living space resulting in personal injury or death.

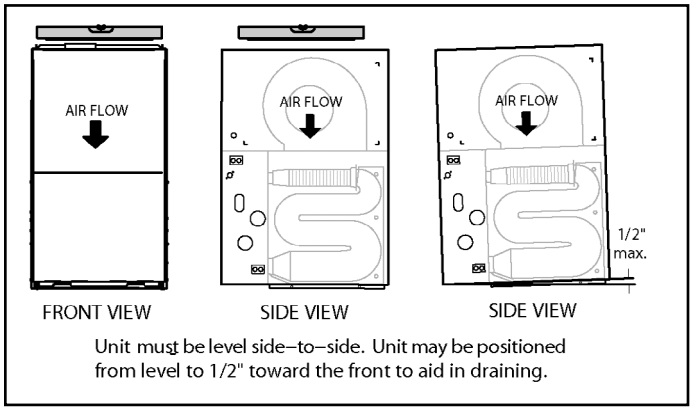

Figure 12. Setting Equipment

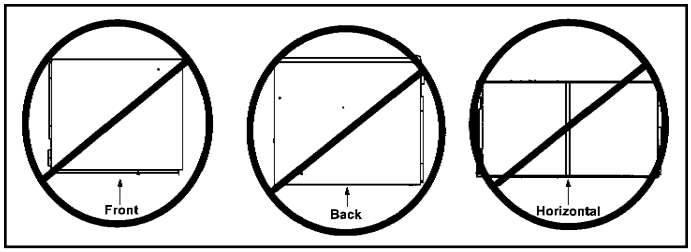

Figure 13. Improper Installations

The unit may be installed three ways in downflow applications: on non-combustible flooring, on combustible flooring using an additive base, or on a reverse-flow cooling coil cabinet. Do not drag the unit across the floor in the downflow position. Floor and furnace flange damage will result.

Refer to Figure 15 for clearances in downflow applications.

Installation on Non-Combustible Flooring

1. Cut floor opening keeping in mind clearances listed on unit rating plate. Also keep in mind gas supply connections, electrical supply, flue and air intake connections and sufficient installation and servicing clearances. See Table 1 for correct floor opening size.
2. Flange warm air plenum and lower the plenum into the opening.
3. Set the unit over the plenum and seal the plenum to the unit.
4. Ensure that the seal is adequate.

Table 1. Non-Combustible Floor Opening Size

Cabinet Width	Front to Rear		Side to Side	
	in.	mm	in.	mm
B (17.5”)	19-3/4	502	16-5/8	422
C (21”)	19-3/4	502	20-1/8	511

NOTE: *Floor opening dimensions listed are 1/4” (6 mm) larger than the unit opening. See dimension drawing on Page 2.*

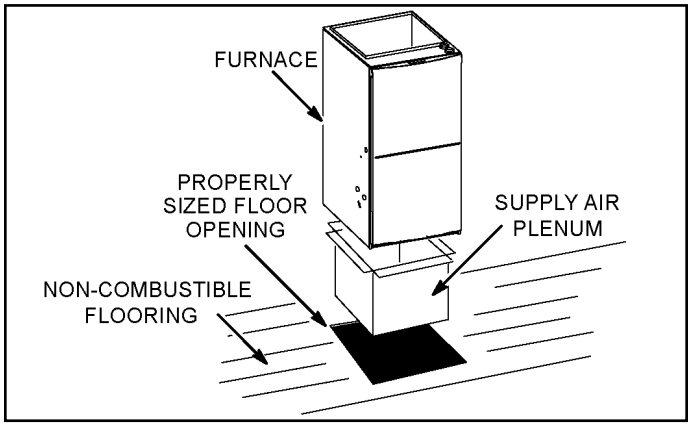

Figure 14.

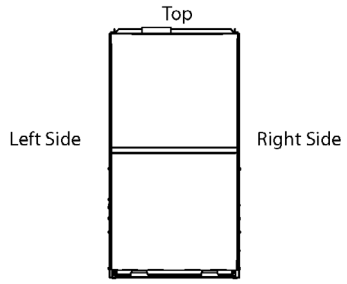

Top	0
*Front	0
Back	0
Sides	0†
Vent	0
Floor	NC‡

* Front clearance in alcove installation must be 24 in. (610 mm). Maintain a minimum of 24 in. (610 mm) for front service access.

† Allow proper clearances to accommodate condensate trap.

‡ The furnace may be installed on a combustible wood floor if an optional additive base is installed between the furnace and the combustible floor.

Figure 15. Downflow Application Installation Clearances

Installation on Combustible Flooring

1. When unit is installed on a combustible floor, a downflow combustible flooring base must be installed between the furnace and the floor. The base must be ordered separately. See Table 2 for opening size to cut in floor.

⚠ CAUTION

The furnace and combustible flooring base shall not be installed directly on carpeting, tile, or other combustible material other than wood flooring.

Table 2. Combustible Flooring Base Opening Size

Cabinet Width	Catalog Number	Front to Rear		Side to Side	
		in.	mm	in.	mm
B (17.5”)	11M60	22	559	18-3/4	476
C (21”)	11M61	22	559	22-3/4	578

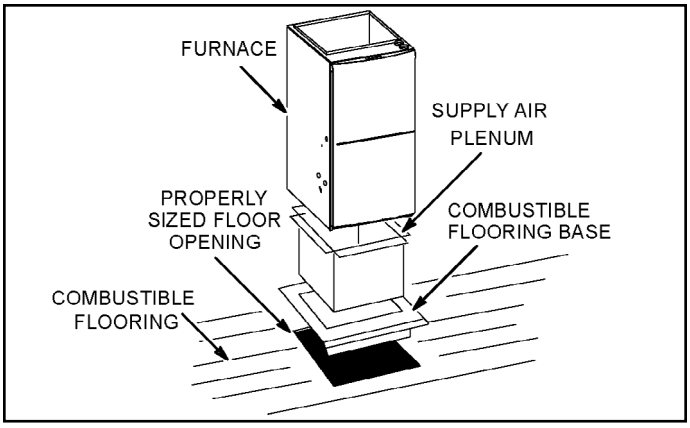

Figure 16.

2. After opening is cut, set the combustible flooring base into opening.
3. Check fiberglass strips on the combustible flooring base to make sure they are properly glued and positioned.
4. Lower supply air plenum into the combustible flooring base until plenum flanges seal against fiberglass strips.

   NOTE: *Be careful not to damage fiberglass strips. Check for a tight seal.*
5. Set the furnace over the plenum.
6. Ensure that the seal between the furnace and plenum is adequate.

Installation on Cooling Coil Cabinet

NOTE: *Downflow combustible flooring kit is not used.*

1. Refer to reverse-flow coil installation instructions for correctly sized opening in floor and installation of cabinet.
2. When cooling cabinet is in place, set and secure the furnace according to the instructions that are provided with the cooling coil. Secure the furnace to the cabinet.
3. Seal the cabinet and check for air leaks.

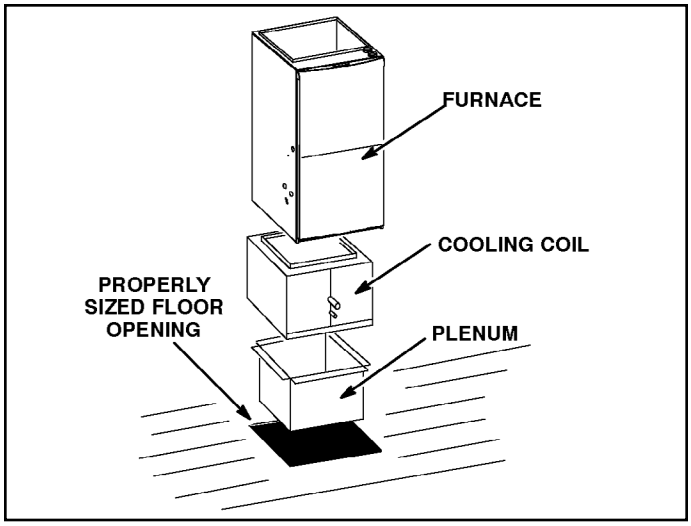

Figure 17.

Return Air Opening - Downflow Units

Return air may be brought in only through the top opening of a furnace installed in the downflow position. The following steps should be taken when installing plenum:

1. Bottom edge of plenum should be flanged with a hemmed edge (See Figure 18 or Figure 19).
2. Sealing strips should be used to ensure an airtight seal between the cabinet and the plenum.
3. In all cases, plenum should be secured to top of furnace using sheet metal screws.
4. Make certain that an adequate seal is made.

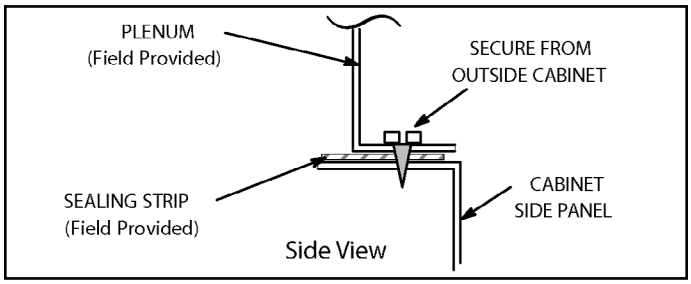

Figure 18.

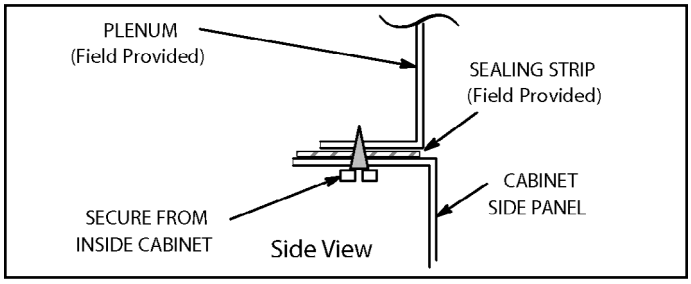

Figure 19.

Filters

This unit is not equipped with a filter or rack. A field provided filter is required for the unit to operate properly. Table 3 lists recommended filter sizes.

A filter must be in place whenever the unit is operating.

Table 3.

Furnace Cabinet Width	Filter Size
17-1/2”	16 25 1 (1)
21”	

Duct System

Use industry-approved standards to size and install the supply and return air duct system. This will result in a quiet and low-static system that has uniform air distribution.

NOTE: *This furnace is not certified for operation in heating mode (indoor blower operating at selected heating speed) with an external static pressure which exceeds 0.8 inches w.c. Operation at these conditions may result in improper limit operation.*

Supply Air Plenum

If the furnace is installed without a cooling coil, a removable access panel should be installed in the supply air duct. The access panel should be large enough to permit inspection (by reflected light) of the heat exchanger for leaks after the furnace is installed. The furnace access panel must always be in place when the furnace is operating and it must not allow leaks into the supply air duct system.

Return Air Plenum

NOTE: *Return air must not be drawn from a room where this furnace, or any other gas-fueled appliance (i.e., water heater), or carbon monoxide-producing device (i.e., wood fireplace) is installed.*

When return air is drawn from a room, a negative pressure is created in the room. If a gas appliance is operating in a room with negative pressure, the flue products can be pulled back down the vent pipe and into the room. This reverse flow of the flue gas may result in incomplete combustion and the formation of carbon monoxide gas. This toxic gas might then be distributed throughout the house by the furnace duct system.

Use fiberglass sealing strips, caulking, or equivalent sealing method between the plenum and the furnace cabinet to ensure a tight seal. If a filter is installed, size the return air duct to fit the filter frame.

Pipe & Fittings Specifications

All pipe, fittings, primer and solvent cement must conform with American National Standard Institute and the American Society for Testing and Materials (ANSI/ASTM) standards. The solvent shall be free flowing and contain no lumps, undissolved particles or any foreign matter that adversely affects the joint strength or chemical resistance of the cement. The cement shall show no gelation, stratification, or separation that cannot be removed by stirring. Refer to Table 5 for approved piping and fitting materials.

⚠ CAUTION

Solvent cements for plastic pipe are flammable liquids and should be kept away from all sources of ignition. Do not use excessive amounts of solvent cement when making joints. Good ventilation should be maintained to reduce fire hazard and to minimize breathing of solvent vapors. Avoid contact of cement with skin and eyes.

⚠ IMPORTANT

The exhaust and intake connections are made of PVC. Use PVC primer and solvent cement when using PVC vent pipe. When using ABS vent pipe, use transitional solvent cement to make connections to the PVC fitting in the unit.

Use PVC primer and solvent cement or ABS solvent cement meeting ASTM specifications; refer to Table 5. As an alternate, use all purpose cement, to bond ABS, PVC, or CPVC pipe when using fittings and pipe made of the same materials. Use transition solvent cement when bonding ABS to either PVC or CPVC.

Low temperature solvent cement is recommended during cooler weather. Metal or plastic strapping may be used as vent pipe hangers. Uniformly apply a liberal coat of PVC primer for PVC or use a clean dry cloth for ABS to clean inside socket surface of fitting and male end of pipe to depth of fitting socket.

Table 4. Outdoor Termination Kits Usage

Model	VENT PIPE DIA. (in.)	STANDARD			CONCENTRIC		
		Outdoor Exhaust Accelerator (Dia. X Length)	Outdoor Exhaust Accelerator (Dia. X Length)	Flush Mount Kit	1-1/2” Concentric Kit	2” Concentric Kit	3” Concentric Kit
		1-1/2” X 12”	2” X 12”	51W11**	71M80 or +44W92++	69M29 or +44W92++	60L46 or 44W93+
045	[1] 1-1/2			YES	YES		
	2	YES		YES	YES		
	2-1/2	YES		YES	YES		
	3	YES		YES	YES		
070	[1] 1-1/2			YES	YES		
	2	YES		YES	YES		
	2-1/2	YES		YES	YES		
	3	YES		YES	YES		
090	2		YES	YES		YES	YES
	2-1/2		YES	YES		YES	YES
	3		YES	YES		YES	YES
110	2		YES	YES		YES	YES
	2-1/2		YES	YES		YES	YES
	3		YES	YES		YES	YES

[1] 2 inch to 1-1/2 inch reducer required, must be field provided.

* Requires field-provided and installed 1-1/2” exhaust accelerator.

** Kit 51W11 is provided with a 1-1/2” accelerator, which must be for all 2 and 2-1/2” PVC installations. When using 1-1/2 in. piping, the pipe must be transitioned to 2 in. pipe when used with the Flush Mount Kit.

+ Termination kits 44W92 and 44W93, 30G28 and 81J20 are approved for use in Canadian installations to meet CSAB149 and ULC S636.

++ The 44W92 Concentric kit is provided with a 1-1/2” accelerator, which must be installed on the exhaust outlet when this kit is used with this furnace. When using 1-1/2 in. piping, the pipe must be transitioned to 2 in. pipe when used with the Concentric Kit.

Canadian Applications Only

Pipe, fittings, primer and solvent cement used to vent (exhaust) this appliance must be certified to ULC S636 and supplied by a single manufacturer as part of an approved vent (exhaust) system. When bonding the vent system to the furnace, use ULC S636 approved One-Step Transition Cement to bond the pipe to the flue collar. In addition, the first three feet of vent pipe from the furnace flue collar must be accessible for inspection.

Table 5 lists the available exhaust termination kits. All vent terminations are PVC.

Table 5.

Piping and Fittings Specifications	
Schedule 40 PVC (Pipe)	D1785
Schedule 40 PVC (Fittings)	D2466
Schedule 40 CPVC (Pipe)	F441
Schedule 40 CPVC (Fittings)	F438
SDR-21 PVC or SDR-26 PVC (Pipe)	D2241
SDR-21 CPVC or SDR-26 CPVC (Pipe)	F442
Schedule 40 ABS (Pipe)	D1527
Schedule 40 ABS (Fittings)	D2468
ABS-DWV (Drain Waste & Vent) (Pipe & Fittings)	D2661
PVC-DWV (Drain Waste & Vent) (Pipe & Fittings)	D2665
Primer & Solvent Cement	**ASTM Specification**
PVC & CPVC Primer	F656
PVC Solvent Cement	D2564
CPVC Solvent Cement	F493
ABS Solvent Cement	D2235
PVC/CPVC/ABS All Purpose Cement For Fittings & Pipe of the same material	D2564, D2235, F493
ABS to PVC or CPVC Transition Solvent Cement	D3138
Canada Pipe & Fitting & Solvent Cement	**Marking**
PVC & CPVC Pipe and Fittings	ULC S636
PVC & CPVC Solvent Cement	
ABS to PVC or CPVC Transition Cement	
Polypropylene Venting System	
PolyPro® by Duravent	
InnoFlue® by Centrotherm	
ECCO Polypropylene Vent™	
UL 1738 CERTIFIED GAS VENTING SYSTEM	
IPEX System1738 Schedule 40 PVC Pipes and Fittings	UL 1738
IPEX System1738 PVC FGV Cement & Primer	
POLYPROPYLENE VENTING SYSTEM	
InnoFlue® by Centrotherm	

Joint Cementing Procedure

All cementing of joints should be done according to the specifications outlined in ASTM D 2855.

NOTE: *A sheet metal screw may be used to secure the intake pipe to the connector, if desired. Use a drill or self tapping screw to make a pilot hole.*

⚠ DANGER

DANGER OF EXPLOSION!

Fumes from PVC glue may ignite during system check. Allow fumes to dissipate for at least 5 minutes before placing unit into operation.

1. Measure and cut vent pipe to desired length.
2. Deburr and chamfer end of pipe, removing any ridges or rough edges. If end is not chamfered, edge of pipe may remove cement from fitting socket and result in a leaking joint.
3. Clean and dry surfaces to be joined.
4. Test fit joint and mark depth of fitting on outside of pipe.
5. Uniformly apply a liberal coat of PVC primer for PVC or use a clean dry cloth for ABS to clean inside socket surface of fitting and male end of pipe to depth of fitting socket.
6. Promptly apply solvent cement to end of pipe and inside socket surface of fitting. Cement should be applied lightly but uniformly to inside of socket. Take care to keep excess cement out of socket. Apply second coat to end of pipe.

   NOTE: *Time is critical at this stage. Do Not allow Primer to dry before applying cement.*
7. Immediately after applying last coat of cement to pipe, and while both inside socket surface and end of pipe are wet with cement, forcefully insert end of pipe into socket until it bottoms out. Turn PVC pipe 1/4 turn during assembly (but not after pipe is fully inserted) to distribute cement evenly. Do not turn ABS or cellular core pipe pipe.

   NOTE: *Assembly should be completed within 20 seconds after last application of cement. Hammer blows should not be used when inserting pipe.*
8. After assembly, wipe excess cement from pipe at end of fitting socket. A properly made joint will show a bead around its entire perimeter. Any gaps may indicate an improper defective assembly due to insufficient solvent.
9. Handle joints carefully until completely set.

Venting Practices

NOTE - For any Low GWP refrigerant systems with exposed line set joints installed in the same space,each non-direct vent furnace system must have a refrigerant detection sensor installed below the level of the burners (See SECONDARY SENSOR REQUIREMENTS on page 41). Any direct vent furnace system is not subject to this requirement.

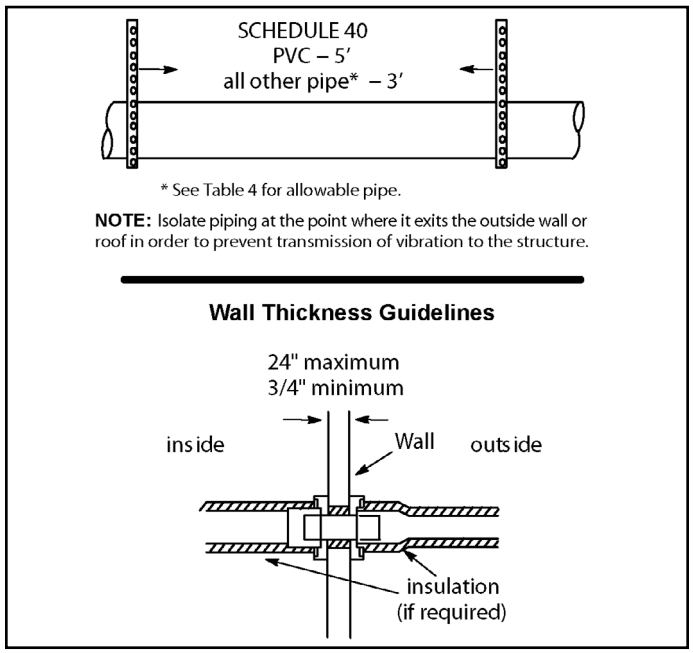

Figure 20. Piping Suspension Guidelines

Removal of the Furnace from Common Vent

In the event that an existing furnace is removed from a venting system commonly run with separate gas appliances, the venting system is likely to be too large to properly vent the remaining attached appliances.

Conduct the following test while each appliance is operating and the other appliances (which are not operating) remain connected to the common venting system. If the venting system has been installed improperly, you must correct the system as indicated in the general venting requirements section.

⚠ WARNING

CARBON MONOXIDE POISONING HAZARD

Failure to follow the steps outlined below for each appliance connected to the venting system being placed into operation could result in carbon monoxide poisoning or death.

The following steps shall be followed for each appliance connected to the venting system being placed into operation, while all other appliances connected to the venting system are not in operation.

1. Seal any unused openings in the common venting system.
2. Inspect the venting system for proper size and horizontal pitch. Determine that there is no blockage, restriction, leakage, corrosion, or other deficiencies which could cause an unsafe condition.
3. Close all building doors and windows and all doors between the space in which the appliances remaining connected to the common venting system are located and other spaces of the building. Turn ON clothes dryers and any appliances not connected to the common venting system. Turn ON any exhaust fans, such as range hoods and bathroom exhausts, so they will operate at maximum speed. Do not operate a summer exhaust fan. Close fireplace dampers.
4. Follow the lighting instructions. Turn ON the appliance that is being inspected. Adjust the thermostat so that the appliance operates continuously.
5. After the main burner has operated for 5 minutes, test for leaks of flue gases at the draft hood relief opening. Use the flame of a match or candle.
6. After determining that each appliance connected to the common venting system is venting properly, (step 3) return all doors, windows, exhaust fans, fireplace dampers, and any other gas burning appliances to their previous mode of operation.
7. If a venting problem is found during any of the preceding tests, the common venting system must be modified to correct the problems.

Resize the common venting system to the minimum vent pipe size determined by using the appropriate tables in Appendix G. These are in the current standards of the National Fuel Gas Code ANSI Z223.1.

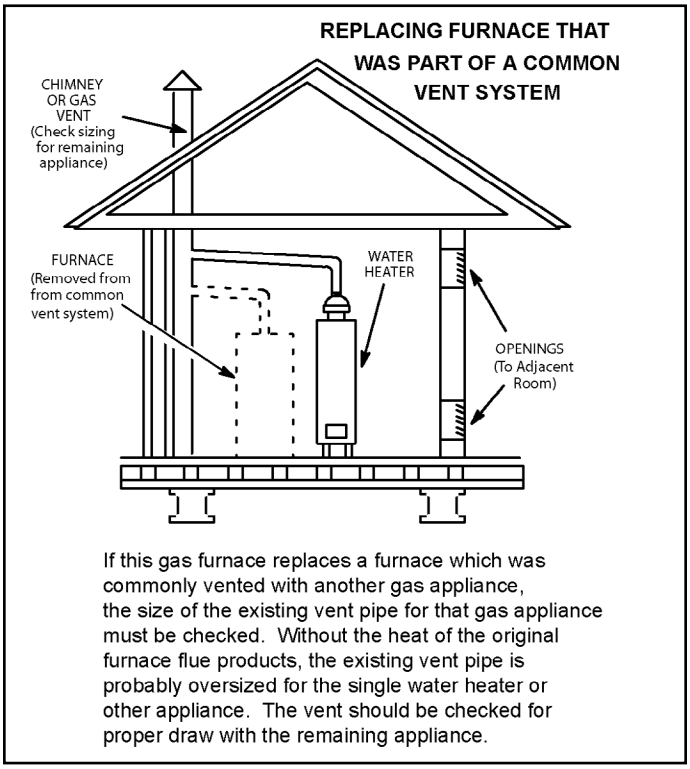

Figure 21.

1. In areas where piping penetrates joist or interior walls, hole must be large enough to allow clearance on all sides of pipe through center of hole using a hanger.
2. When furnace is installed in a residence where unit is shut down for an extended period of time, such as a vacation home, make provisions for draining condensate collection trap and lines.

Exhaust Piping

Route piping to outside of structure. Continue with installation following instructions given in piping termination section.

⚠ CAUTION

Do not discharge exhaust into an existing stack or stack that also serves another gas appliance. If vertical discharge through an existing unused stack is required, insert PVC pipe inside the stack until the end is even with the top or outlet end of the metal stack.

⚠ CAUTION

The exhaust vent pipe operates under positive pressure and must be completely sealed to prevent leakage of combustion products into the living space.

Vent Piping Guidelines

This gas furnace can be installed as either a Non-Direct Vent or a Direct Vent gas central furnace.

NOTE: *In non-Direct Vent installations, combustion air is taken from indoors and flue gases are discharged outdoors. In Direct Vent installations, combustion air is taken from outdoors and flue gases are discharged outdoors.*

Intake and exhaust pipe sizing - Size pipe according to Table 6 and Table 7A through Table 7C. Table 6 lists the minimum vent pipe lengths permitted. Table 7A through Table 7C list the maximum pipe lengths permitted.

Regardless of the diameter of pipe used, the standard roof and wall terminations described in section Exhaust Piping Terminations should be used. Exhaust vent termination pipe is sized to optimize the velocity of the exhaust gas as it exits the termination.

Table 6.
Minimum Vent Pipe Lengths

Models	Min. Vent Length*
045, 070, 090, 110	15 ft or 5 ft plus 2 elbows or 10 ft plus 1 elbow
*Any approved termination may be added to the minimum length listed.	

Use the following steps to correctly size vent pipe diameter.

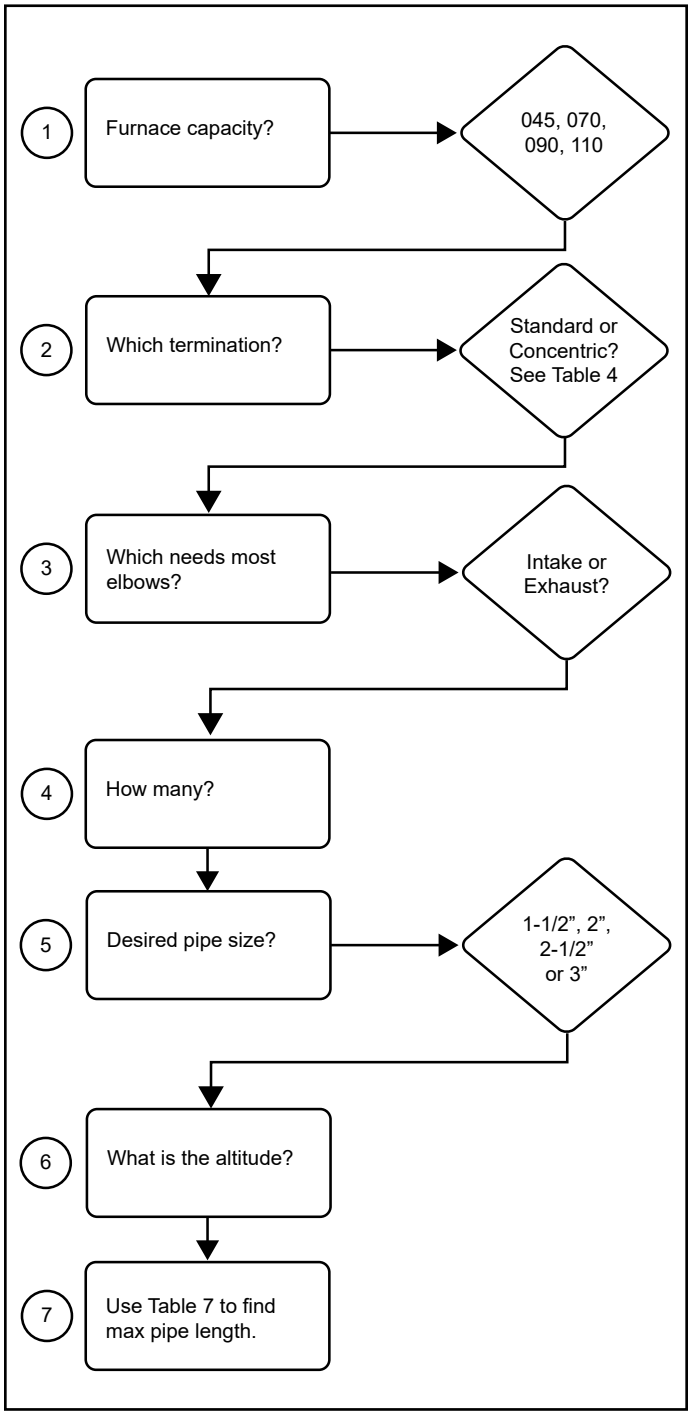

Figure 22.

In some applications which permit the use of several different sizes of vent pipe, a combination vent pipe may be used. Contact Allied Air Technical Service for assistance in sizing vent pipe in these applications.

⚠ IMPORTANT

Do not use screens or perforated metal in exhaust or intake terminations. Doing so will cause freeze-ups and may block the terminations.

Table 7A.

Maximum Allowable Intake or Exhaust Vent Length (feet)

Standard Termination at Elevation 0 - 4,500 ft																
Number of 90° Elbows Used	1-1/2” Pipe				2” Pipe				2-1/2” Pipe				3” Pipe			
	Model				Model				Model				Model			
	45	70	90	110	45	70	90	110	45	70	90	110	45	70	90	110
1	20	15	n/a	n/a	66	51	29	9	100	100	78	43	123	122	103	103
2	15	10			61	46	24	n/a	95	95	73	38	118	117	98	98
3	10	n/a			56	41	19		90	90	68	33	113	112	93	93
4	n/a				51	36	14		85	85	63	28	108	107	88	88
5					46	31	9		80	80	58	23	103	102	83	83
6					41	26	n/a		75	75	53	18	98	97	78	78
7					36	21			70	70	48	13	93	92	73	73
8					31	16			65	65	43	8	89	87	68	68
9					26	11			60	60	38	n/a	83	82	63	63
10					21	6			55	55	33		78	77	58	58

Standard Termination at Elevation 4,501 - 10,000 ft																
Number of 90° Elbows Used	1-1/2” Pipe				2” Pipe				2-1/2” Pipe				3” Pipe			
	Model				Model				Model				Model			
	45	70	90	110	45	70	90	110	45	70	90	110	45	70	90	110
1	20	15	n/a	n/a	66	51	29	n/a	100	100	78	43	123	122	103	103
2	15	10			61	46	24		95	95	73	38	118	117	98	98
3	10	n/a			56	41	19		90	90	68	33	113	112	93	93
4	n/a				51	36	14		85	85	63	28	108	107	88	88
5					46	31	9		80	80	58	23	103	102	83	83
6					41	26	n/a		75	75	53	18	98	97	78	78
7					36	21			70	70	48	13	93	92	73	73
8					31	16			65	65	43	8	89	87	68	68
9					26	11			60	60	38	n/a	83	82	63	63
10					21	n/a			55	55	33		78	77	58	58

*Size intake and exhaust pipe length separately. Values in table are for intake or exhaust, not combined total. Both intake and exhaust must be same pipe size.

Table 7B.

Maximum Allowable Intake or Exhaust Vent Length (feet)

Concentric Termination at Elevation 0 - 4,500 ft																
Number of 90° Elbows Used	1-1/2” Pipe				2” Pipe				2-1/2” Pipe				3” Pipe			
	Model				Model				Model				Model			
	45	70	90	110	45	70	90	110	45	70	90	110	45	70	90	110
1	15	10	n/a	n/a	58	43	27	7	90	90	74	39	106	106	99	99
2	10	n/a			53	38	22	n/a	85	85	69	34	101	101	94	94
3	n/a				48	33	17		80	80	64	29	96	96	89	89
4					43	28	12		75	75	59	24	91	91	84	84
5					38	23	7		70	70	54	19	86	86	79	79
6					33	18	n/a		65	65	49	14	81	81	74	74
7					28	13			60	60	44	9	76	76	69	69
8					23	n/a			55	55	39	n/a	71	71	64	64
9					18				50	50	34		66	66	59	59
10					13				45	45	29		61	61	54	54

Concentric Termination at Elevation 4,501 - 10,000 ft																
Number of 90° Elbows Used	1-1/2” Pipe				2” Pipe				2-1/2” Pipe				3” Pipe			
	Model				Model				Model				Model			
	45	70	90	110	45	70	90	110	45	70	90	110	45	70	90	110
1	15	10	n/a	n/a	58	43	27	n/a	90	90	74	39	106	106	99	99
2	10	n/a			53	38	22		85	85	69	34	101	101	94	94
3	n/a				48	33	17		80	80	64	29	96	96	89	89
4					43	28	12		75	75	59	24	91	91	84	84
5					38	23	7		70	70	54	19	86	86	79	79
6					33	18	n/a		65	65	49	14	81	81	74	74
7					28	13			60	60	44	9	76	76	69	69
8					23	8			55	55	39	n/a	71	71	64	64
9					18	n/a			50	50	34		66	66	59	59
10					13				45	45	29		61	61	54	54

*Size intake and exhaust pipe length separately. Values in table are for intake or exhaust, not combined total. Both intake and exhaust must be same pipe size.

Table 7C.

Maximum Allowable Exhaust Vent Lengths Using Ventilated Attic or Crawl Space for Intake Air in Feet

Standard Termination at Elevation 0 - 10,000 ft																
Number of 90° Elbows Used	1-1/2” Pipe				2” Pipe				2-1/2” Pipe				3” Pipe			
	Model				Model				Model				Model			
	45	70	90	110	45	70	90	110	45	70	90	110	45	70	90	110
1	15	10	n/a	n/a	56	41	24	n/a	85	85	63	28	103	102	83	83
2	10	n/a			51	36	19		80	80	58	23	98	97	78	78
3	n/a				46	31	14		75	75	53	18	93	92	73	73
4					41	26	9		70	70	48	13	88	87	68	68
5					36	21	4		65	65	43	8	83	82	63	63
6					31	16	n/a		60	60	38	3	78	77	58	58
7					26	11			55	55	33	n/a	73	72	53	53
8					21	6			50	50	28		68	67	48	48
9					16	1			45	45	23		63	62	43	43
10					11	n/a			40	40	18		58	57	38	38

NOTE: *Additional vent pipe and elbows used to terminate the vent pipe outside the structure must be included in the total vent length calculation.*

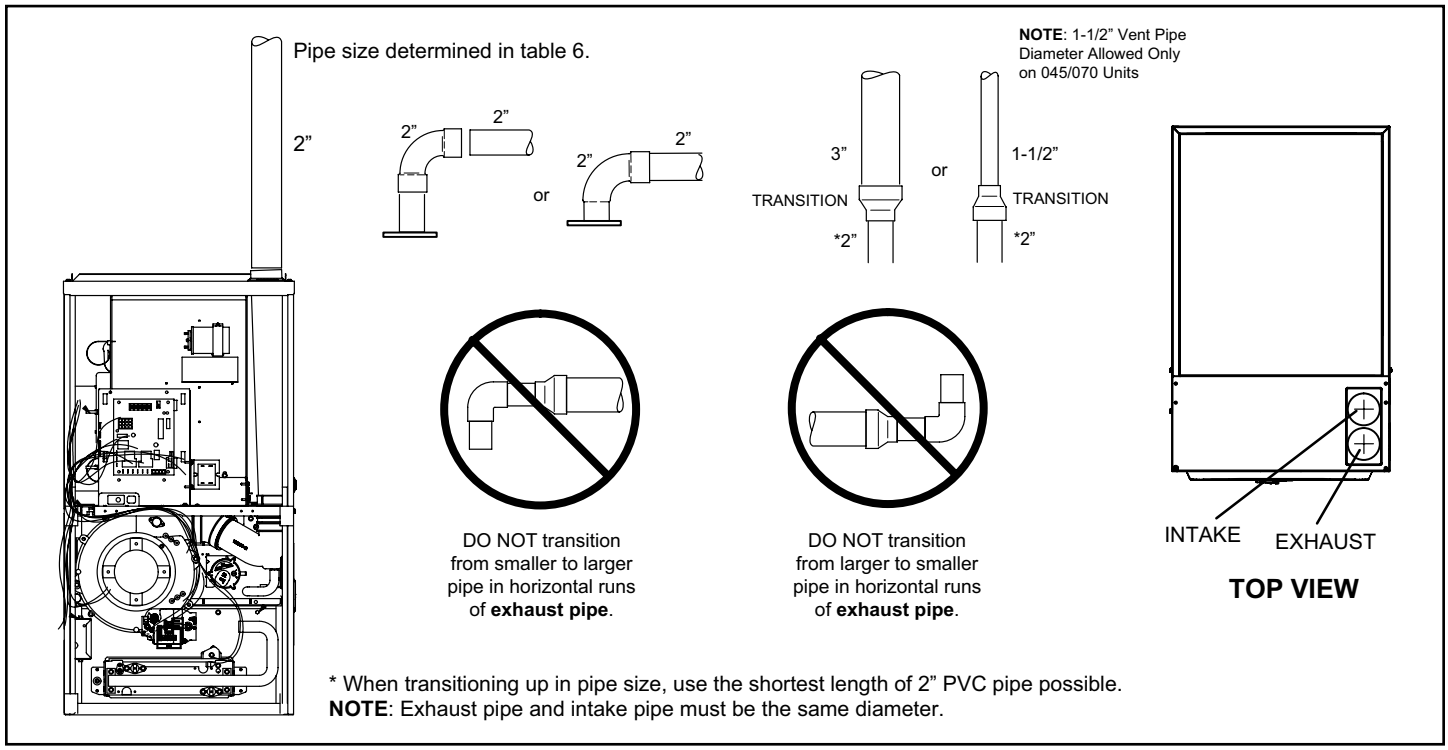

Figure 23. Typical Exhaust Pipe Connections

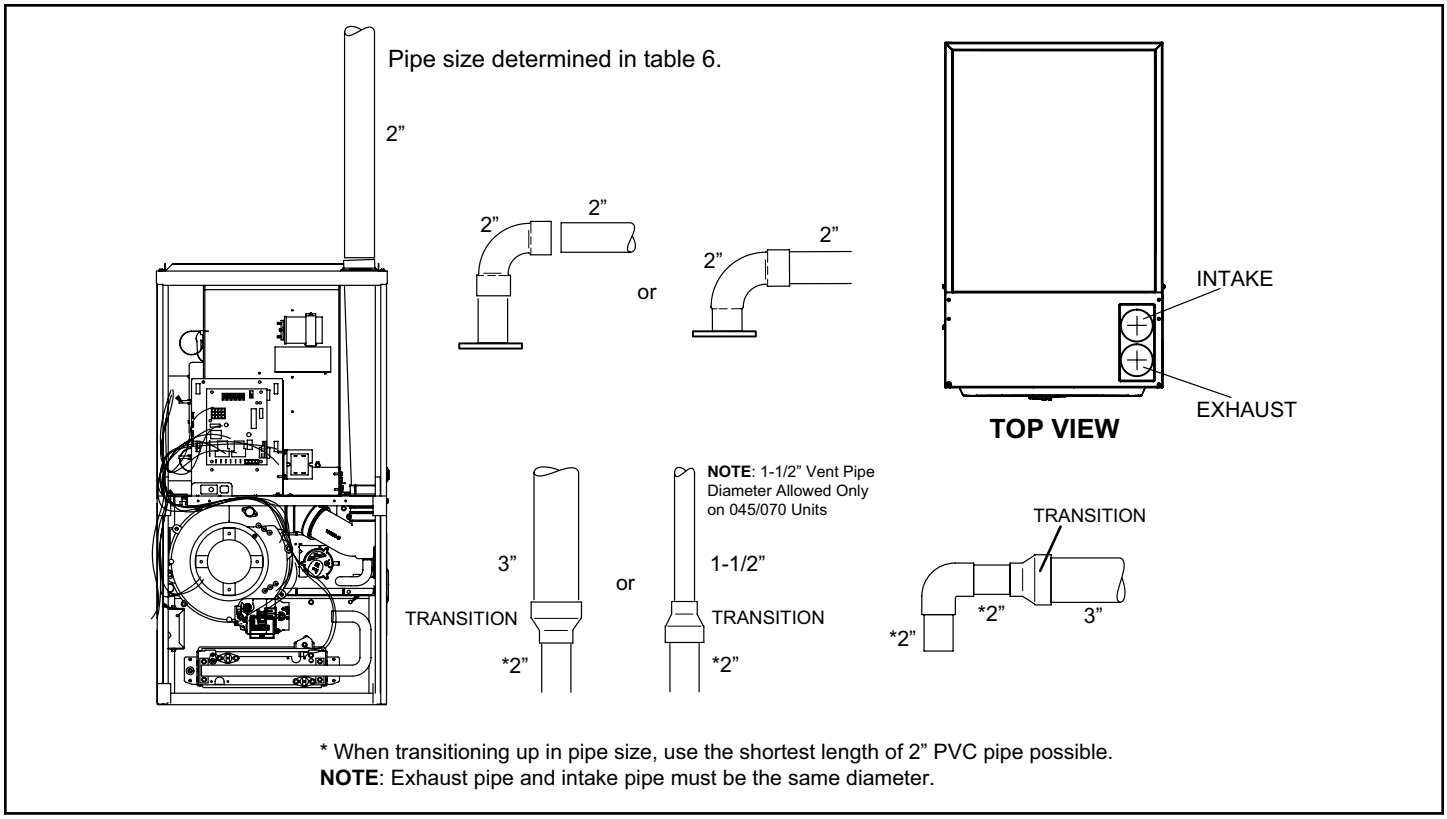

Figure 24. Typical Intake Pipe Connections (Direct Vent Applications)

Intake Piping

This furnace may be installed in either direct vent or non-direct vent applications. In non-direct vent applications, when intake air will be drawn into the furnace from the surrounding space, the indoor air quality must be considered. Guidelines listed in Combustion, Dilution and Ventilation Air section must be followed.

Follow the next two steps when installing the unit in Direct Vent applications, where combustion air is taken from outdoors and flue gases are discharged outdoors. **The provided air intake screen must not be used in direct vent applications (outdoors).**

1. Use cement or a sheet metal screw to secure the intake pipe to the inlet air connector.
2. Route piping to outside of structure. Continue with installation following instructions given in general guide lines for piping terminations and intake and exhaust piping terminations for direct vent sections. Refer to Table 7A through Table 7C for pipe sizes.

Follow the next two steps when installing the unit in Non-Direct Vent applications where combustion air is taken from indoors and flue gases are discharged outdoors.

1. Use field-provided materials and the factory-provided air intake screen to route the intake piping. Maintain a minimum clearance of 3” (76 mm) around the air intake opening. The air intake opening (with the protective screen) should always be directed forward, or sideways.
2. If intake air is drawn from a ventilated crawlspace (Figure 26) or ventilated attic (Figure 25) the exhaust vent length must not exceed those listed in Table 7C. If 3” diameter pipe is used, reduce to 2” diameter pipe to accommodate the debris screen.
3. Use a sheet metal screw to secure the intake pipe to the connector, if desired.

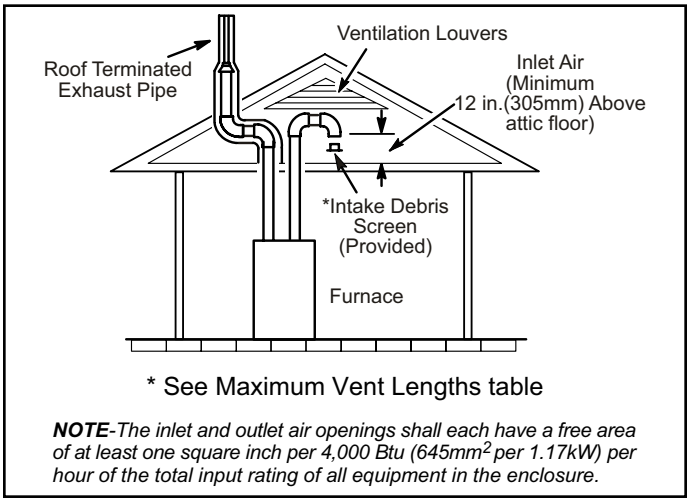

Figure 25. Equipment in Confined Space (Inlet Air from Ventilated Attic and Outlet Air to Outside)

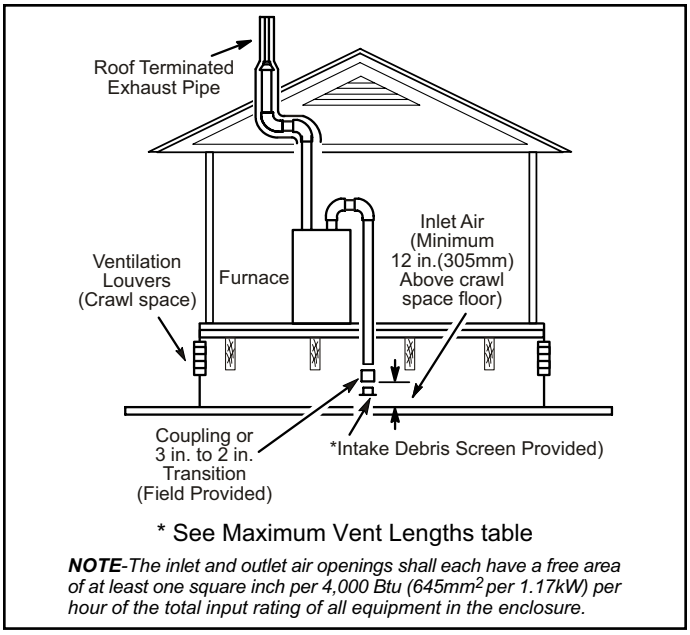

Figure 26. Equipment in Confined Space (Inlet Air from Ventilated Crawlspace and Outlet Air to Outside)

⚠ WARNING

If this unit is being installed in an application with combustion air coming in from a space serviced by an exhaust fan, power exhaust fan, or other device which may create a negative pressure in the space, take care when sizing the inlet air opening. The inlet air opening must be sized to accommodate the maximum volume of exhaust air as well as the maximum volume of combustion air required for all gas appliances serviced by this space.

General Guidelines for Vent Terminations

In Non-Direct Vent applications, combustion air is taken from indoors and the flue gases are discharged to the outdoors. This unit is then classified as a non-direct vent, Category IV gas furnace.

In Direct Vent applications, combustion air is taken from outdoors and the flue gases are discharged to the outdoors. This unit is then classified as a direct vent, Category IV gas furnace.

In both Non-Direct Vent and Direct Vent applications, the vent termination is limited by local building codes. In the absence of local codes, refer to the current National Fuel Gas Code ANSI Z223-1/NFPA 54 in U.S.A., and current CSA-B149 Natural Gas and Propane Installation Codes in Canada for details.

Position termination according to location given in Figure 28 or Figure 29. In addition, position termination so it is free from any obstructions and 12” above the average snow accumulation.

At vent termination, care must be taken to maintain protective coatings over building materials (prolonged exposure to exhaust condensate can destroy protective coatings). It is recommended that the exhaust outlet not be located within 6 feet (1.8 m) of a condensing unit because the condensate can damage the painted coating.

NOTE: *See Table 8 for maximum allowed exhaust pipe length without insulation in unconditioned space during winter design temperatures below 32° F (0° C). If required, exhaust pipe should be insulated with 1/2” (13 mm), Armaflex or equivalent when run through an unconditioned area. In extremely cold climate areas with temperature below 20° F (6.7° C) it is recommended that 3/4” (19 mm) Armaflex or equivalent be used. Insulation on outside runs of exhaust pipe should be painted or wrapped to protect insulation from deterioration in accordance with the insulation manufacturers recommendation. Exhaust pipe insulation may not be necessary in some specific applications.*

⚠ IMPORTANT

Do not use screens or perforated metal in exhaust terminations. Doing so will cause freeze-ups and may block the terminations.

NOTE: *During extremely cold temperatures, below approximately 20° F (6° C), units with long runs of vent pipe through unconditioned space, even when insulated, may form ice in the exhaust termination that prevents the unit from operating properly. Longer run times of at least 5 minutes will alleviate most icing problems. Also, a heating cable may be installed on exhaust piping and termination to prevent freeze-ups. Heating cable installation kits are available, see unit specification sheets for part numbers.*

⚠ IMPORTANT

For Canadian Installations Only:

In accordance to CSA International B149 installation codes, the minimum allowed distance between the combustion air intake inlet and the exhaust outlet of other appliances shall not be less than 12 inches (305 mm).

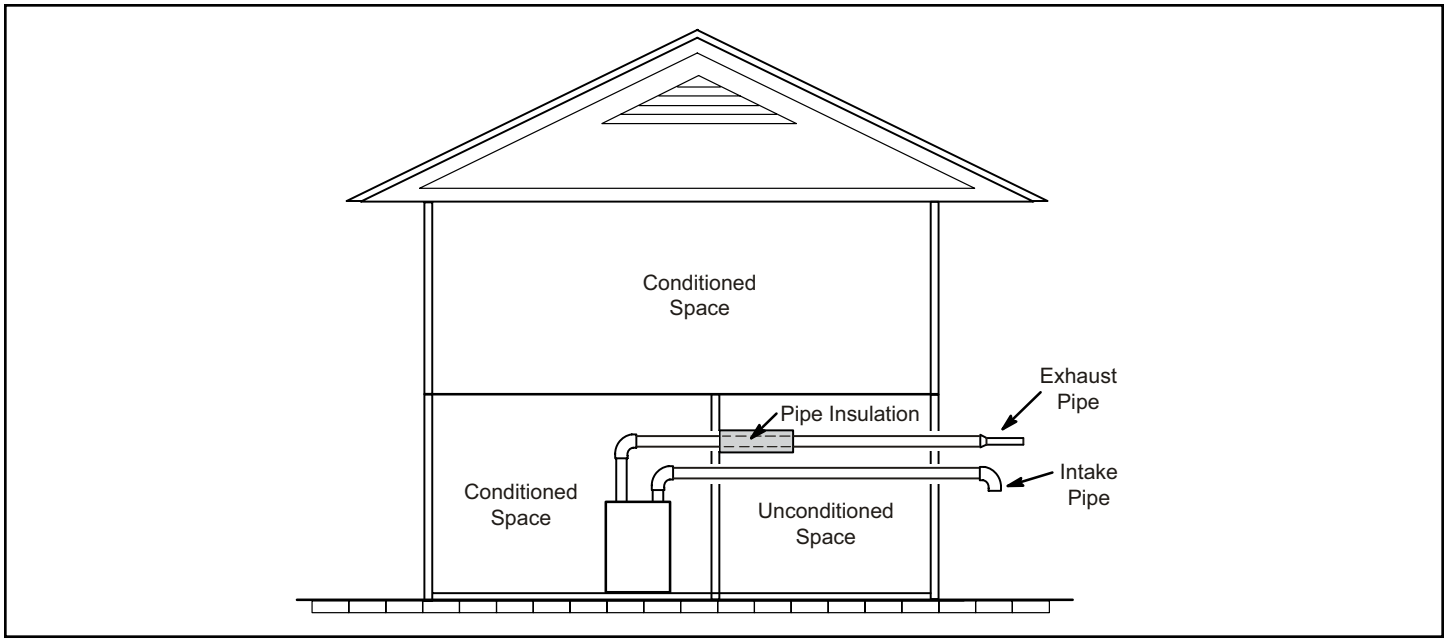

Figure 27. Insulating Exhaust Pipe in an Unconditioned Space

Table 8.

Maximum Allowable Exhaust Vent Pipe Length[3] (in ft.) without Insulation in Unconditioned Space for Winter Design Temperatures

Winter Design Temperatures[1] ºF (ºC)	Vent Pipe Diameter	Unit Input Size							
		045		070		090		110	
		PVC	[2]PP	PVC	[2]PP	PVC	[2]PP	PVC	[2]PP
32 to 21 (0 to -6)	1-1/2 in.	22	N/A	20	N/A	N/A	N/A	N/A	N/A
	2 in.	21	18	33	30	46	42	30	30
	2-1/2 in.	16	N/A	26	N/A	37	N/A	36	N/A
	3 in.	12	12	21	21	30	30	29	29
20 to 1 (-7 to -17)	1-1/2 in.	12	N/A	20	N/A	N/A	N/A	N/A	N/A
	2 in.	11	9	19	17	28	25	27	24
	2-1/2 in.	7	N/A	14	N/A	21	N/A	20	N/A
	3 in.	N/A	N/A	9	9	16	16	14	14
0 to -20 (-18 to -29)	1-1/2 in.	8	N/A	13	N/A	N/A	N/A	N/A	N/A
	2 in.	6	4	12	10	19	16	18	15
	2-1/2 in.	N/A	N/A	7	N/A	13	N/A	12	N/A
	3 in.	N/A	N/A	N/A	N/A	8	8	7	7

[1] Refer to 99% Minimum Design Temperature table provided in the current edition of the ASHRAE Fundamentals Handbook.

[2] Poly-Propylene vent pipe (PP) by Duravent and Centrotherm

[3] Vent length in table is equivalent length. Each elbow is equivalent to 5ft. of straight pipe and should be included when measuring total length.

NOTE- Maximum uninsulated vent lengths listed may include the termination (vent pipe exterior to the structure) and cannot exceed 5 linear feet or the maximum allowable intake or exhaust vent length listed in Table 7A through Table 7C.

NOTE - If insulation is required in an unconditioned space, it must be located on the pipe closest to the furnace. See Figure 27.

NOTE - Concentric terminations are the equivalent of 5ft. and should be considered when measuring pipe length.

VENT TERMINATION CLEARANCES FOR NON-DIRECT VENT INSTALLATIONS IN THE US AND CANADA

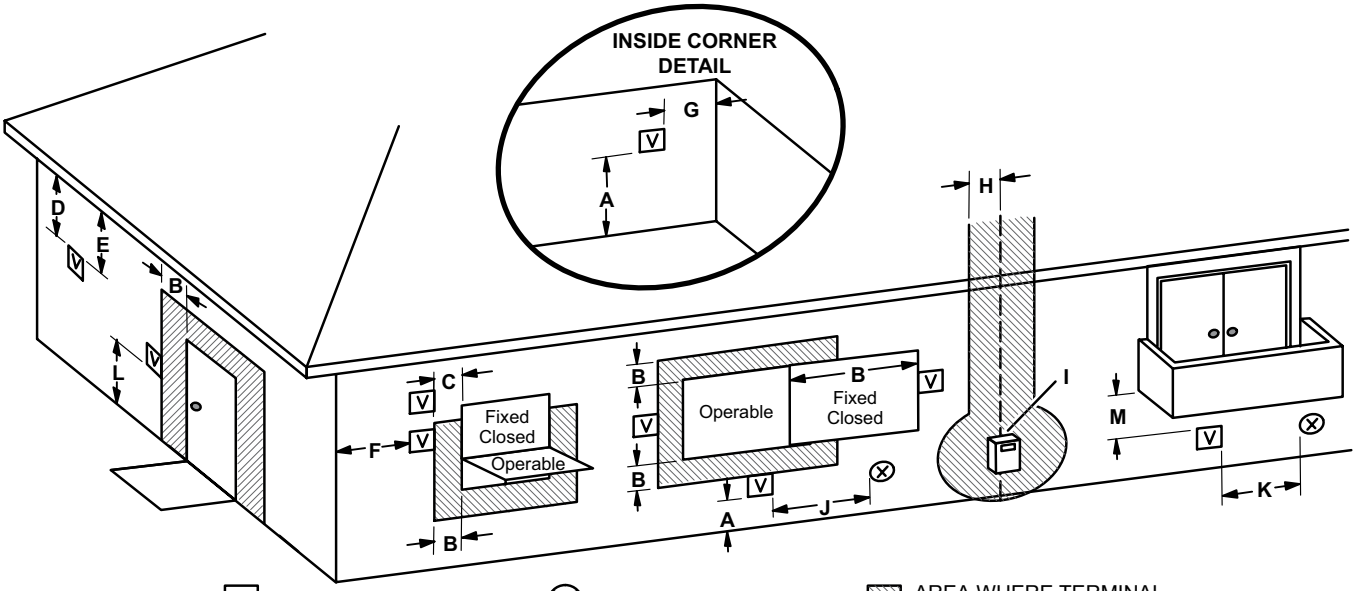

		US Installations[1]	Canadian Installations[2]
A =	Clearance above grade, veranda, porch, deck or balcony	12 inches (305mm) or 12 inches (305mm) above average snow accumulation.	12 inches (305mm) or 12 inches (305mm) above average snow accumulation.
B =	Clearance to window or door that may be opened	4 feet (1.2 m) below or to side of opening; 1 foot (30cm) above opening	6 inches (152mm) for appliances <10,000 Btuh (3kw), 12 inches (305mm) for appliances > 10,000 Btuh (3kw) and <100,000 Btuh (30kw), 36 inches (.9m) for appliances > 100,000 Btuh (30kw)
C =	Clearance to permanently closed window	* 12”	* 12”
D =	Vertical clearance to ventilated soffit located above the terminal within a horizontal distance of 2 feet (610 mm) from the center line of the terminal	* Equal to or greater than soffit depth.	* Equal to or greater than soffit depth.
E =	Clearance to unventilated soffit	* Equal to or greater than soffit depth.	* Equal to or greater than soffit depth.
F =	Clearance to outside corner	* No minimum to outside corner	* No minimum to outside corner
G =	Clearance to inside corner	*	*
H =	Clearance to each side of center line extended above meter / regulator assembly	* 3 feet (.9m) within a height 15 feet (4.5m) above the meter / regulator assembly	3 feet (.9m) within a height 15 feet (4.5m) above the meter / regulator assembly
I =	Clearance to service regulator vent outlet	* 3 feet (.9m)	3 feet (.9m)
J =	Clearance to non-mechanical air supply inlet to building or the combustion air inlet to any other appliance	4 feet (1.2 m) below or to side of opening; 1 foot (30 cm) above opening	6 inches (152mm) for appliances <10,000 Btuh (3kw), 12 inches (305mm) for appliances > 10,000 Btuh (3kw) and <100,000 Btuh (30kw), 36 inches (.9m) for appliances > 100,000 Btuh (30kw)
K =	Clearance to mechanical air supply inlet	3 feet (.9m) above if within 10 feet (3m) horizontally	6 feet (1.8m)
L =	Clearance above paved sidewalk or paved driveway located on public property	7 feet (2.1m)†	7 feet (2.1m)†
M =	Clearance under veranda, porch, deck or balcony	*12 inches (305mm)‡	12 inches (305mm)‡

1 In accordance with the current ANSI Z223.1/NFPA 54 Natural Fuel Gas Code

2 In accordance with the current CSA B149.1, Natural Gas and Propane Installation Code

† A vent shall not terminate directly above a sidewalk or paved driveway that is located between two single family dwellings and serves both dwellings.

‡ Permitted only if veranda, porch, deck or balcony is fully open on a minimum of two sides beneath the floor. Avoiding this location is recommended if possible.

*For clearances not specified in ANSI Z223.1/NFPA 54 or CSA B149.1, clearance will be in accordance with local installation codes and the requirements of the gas supplier and these installation instructions.”

***NOTE** - This figure is intended to illustrate clearance requirements and does not serve as a substitute for locally adopted installation codes.*

Figure 28. Vent Termination Clearances For Non-Direct Vent Installations in the USA and Canada

VENT TERMINATION CLEARANCES FOR DIRECT VENT INSTALLATIONS IN THE USA AND CANADA

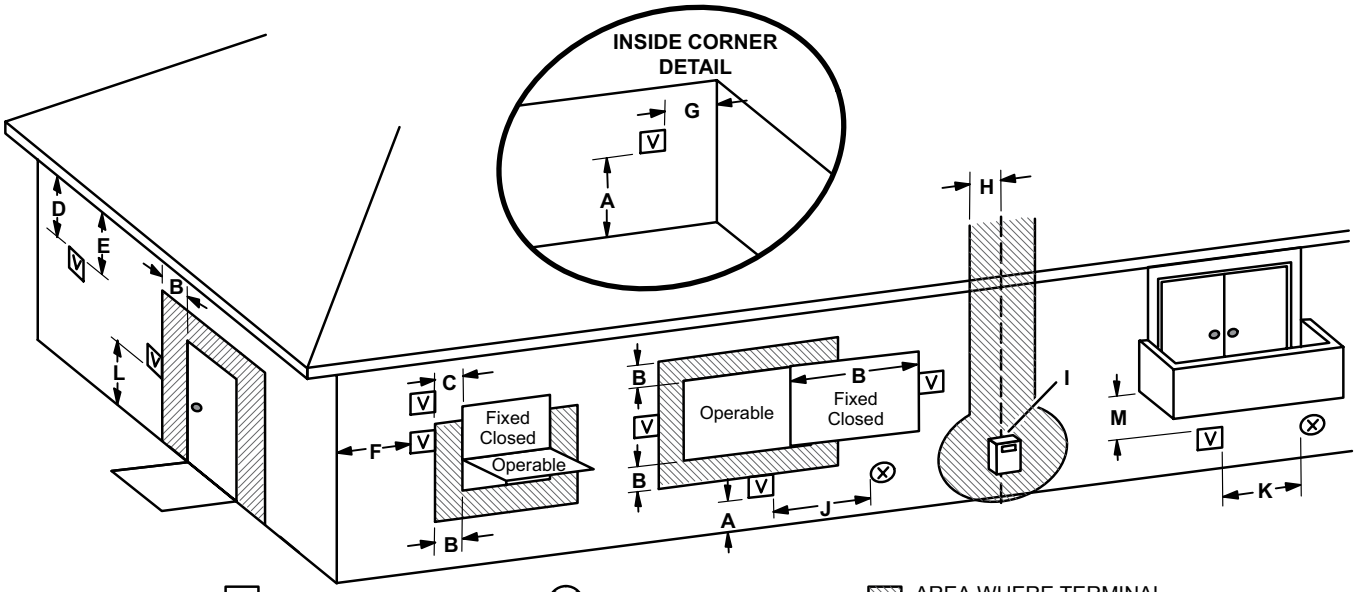

		US Installations[1]	Canadian Installations[2]
A =	Clearance above grade, veranda, porch, deck or balcony	12 inches (305mm) or 12 inches (305mm) above average snow accumulation.	12 inches (305mm) or 12 inches (305mm) above average snow accumulation.
B =	Clearance to window or door that may be opened	6 inches (152mm) for appliances <10,000 Btuh (3kw), 9 inches (228mm) for appliances > 10,000 Btuh (3kw) and <50,000 Btuh (15kw), 12 inches (305mm) for appliances > 50,000 Btuh (15kw)	6 inches (152mm) for appliances <10,000 Btuh (3kw), 12 inches (305mm) for appliances > 10,000 Btuh (3kw) and <100,000 Btuh (30kw), 36 inches (.9m) for appliances > 100,000 Btuh (30kw)
C =	Clearance to permanently closed window	* 12”	* 12”
D =	Vertical clearance to ventilated soffit located above the terminal within a horizontal distance of 2 feet (610mm) from the center line of the terminal	* Equal to or greater than soffit depth	* Equal to or greater than soffit depth
E =	Clearance to unventilated soffit	* Equal to or greater than soffit depth	* Equal to or greater than soffit depth
F =	Clearance to outside corner	* No minimum to outside corner	* No minimum to outside corner
G =	Clearance to inside corner	*	*
H =	Clearance to each side of center line extended above meter / regulator assembly	3 feet (.9m) within a height 15 feet (4.5m) above the meter / regulator assembly	3 feet (.9m) within a height 15 feet (4.5m) above the meter / regulator assembly
I =	Clearance to service regulator vent outlet	* 3 feet (.9m)	3 feet (.9m)
J =	Clearance to non-mechanical air supply inlet to building or the combustion air inlet to any other appliance	6 inches (152mm) for appliances <10,000 Btuh (3kw), 9 inches (228mm) for appliances > 10,000 Btuh (3kw) and <50,000 Btuh (15kw), 12 inches (305mm) for appliances > 50,000 Btuh (15kw)	6 inches (152mm) for appliances <10,000 Btuh (3kw), 12 inches (305mm) for appliances > 10,000 Btuh (3kw) and <100,000 Btuh (30kw), 36 inches (.9m) for appliances > 100,000 Btuh (30kw)
K =	Clearance to mechanical air supply inlet	3 feet (.9m) above if within 10 feet (3m) horizontally	6 feet (1.8m)
L =	Clearance above paved sidewalk or paved driveway located on public property	* 7 feet (2.1m)	7 feet (2.1m)†
M =	Clearance under veranda, porch, deck or balcony	*12 inches (305mm)‡	12 inches (305mm)‡

1 In accordance with the current ANSI Z223.1/NFPA 54 Natural Fuel Gas Code

2 In accordance with the current CSA B149.1, Natural Gas and Propane Installation Code

† A vent shall not terminate directly above a sidewalk or paved driveway that is located between two single family dwellings and serves both dwellings.

‡ Permitted only if veranda, porch, deck or balcony is fully open on a minimum of two sides beneath the floor. Avoiding this location is recommended if possible.

*For clearances not specified in ANSI Z223.1/NFPA 54 or CSA B149.1, clearance will be in accordance with local installation codes and the requirements of the gas supplier and these installation instructions.”

***NOTE** - This figure is intended to illustrate clearance requirements and does not serve as a substitute for locally adopted installation codes.*

Figure 29. Vent Termination Clearances For Direct Vent installations in the USA and Canada

Details of Intake and Exhaust Piping Terminations for Direct Vent Installations

NOTE: *In Direct Vent installations, combustion air is taken from outdoors and flue gases are discharged to outdoors.*

NOTE: *Flue gas may be slightly acidic and may adversely affect some building materials. If any vent termination is used and the flue gases may impinge on the building material, a corrosion-resistant shield (minimum 24 inches square) must be used to protect the wall surface. If the optional tee is used, the protective shield is required. The shield should be constructed using wood, plastic, sheet metal or other suitable material. All seams, joints, cracks, etc. in the affected area should be sealed using an appropriate sealant. See Figure 38.*

Intake and exhaust pipes may be routed either horizontally through an outside wall or vertically through the roof. In attic or closet installations, vertical termination through the roof is preferred. Figure 30 through Figure 37 show typical terminations.

1. Vent terminations are not required to be in the same pressure zone. You may exit the intake on one side of the structure and the exhaust on another side (Figure 31). You may exit the exhaust out the roof and the intake out the side of the structure (Figure 32).
2. Intake and exhaust pipes should be placed as close together as possible at termination end (refer to illustrations). Minimum separation is 3” (76 mm) on roof terminations and 6” (152 mm) on side wall terminations.
3. On roof terminations, the intake piping should terminate straight down using two 90° elbows (See Figure 30).
4. Exhaust piping must terminate straight out or up as shown. A reducer may be required on the exhaust piping at the point where it exits the structure to improve the velocity of exhaust away from the intake piping. See Table 9.

Table 9. Exhaust Pipe Termination Size Reduction

Model	Exhaust Pipe Size	Termination Pipe Size
*045 and *070	2” (51 mm), 2-1/2” (64 mm), 3’ (76 mm)	1-1/2” (38 mm)
*090		2” (51 mm)
110	3” (76 mm)	
*045, 070 and 090 units with the flush-mount termination must use the 1-1/2” accelerator supplied with this kit.		

5. On field supplied terminations for side wall exit, exhaust piping may extend a maximum of 12 inches (305 mm) for 2” PVC and 20 inches (508 mm) for 3” (76 mm) PVC beyond the outside wall. Intake piping should be as short as possible. See Figure 38.

   NOTE: *Care must be taken to avoid recirculation of exhaust back into intake pipe.*

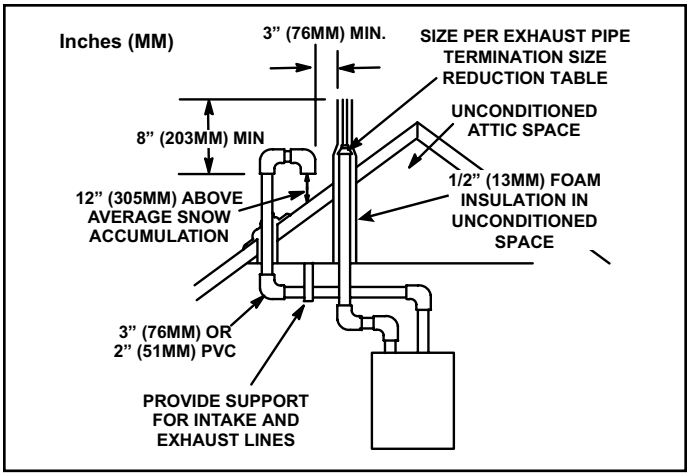

Figure 30. Direct Vent Roof Termination Kit 15F75 or 44J41

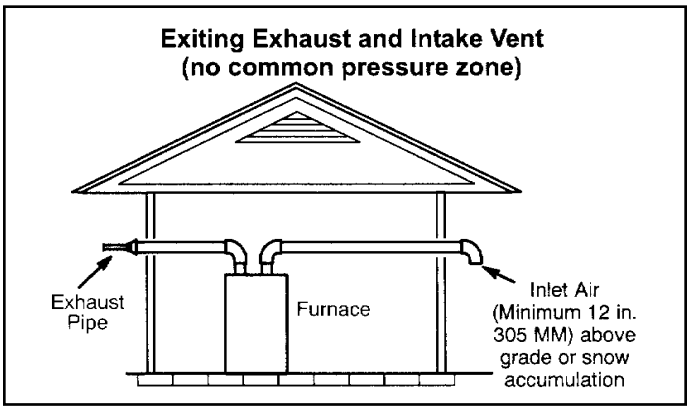

Figure 31.

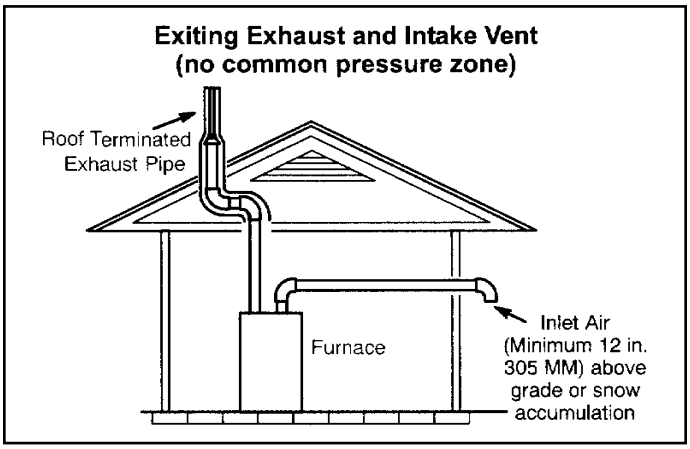

Figure 32.

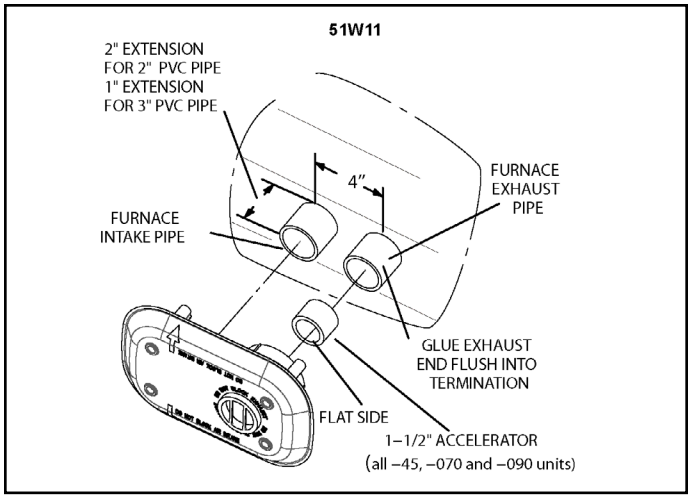

Figure 33. Flush Mount Side Wall Termination

6. On field supplied terminations, a minimum distance between the end of the exhaust pipe and the end of the intake pipe without a termination elbow is 8” and a minimum distance of 6” with a termination elbow. See Figure 38.
7. If intake and exhaust piping must be run up a side wall to position above snow accumulation or other obstructions, piping must be supported every 24” (610 mm) as shown in Figure 38.

   When exhaust and intake piping must be run up an outside wall, the exhaust piping must be terminated with pipe sized per Table 9. The intake piping may be equipped with a 90° elbow turndown. Using turndown will add 5 feet (1.5 m) to the equivalent length of the pipe.
8. Based on the recommendation of the manufacturer, a multiple furnace installation may use a group of up to four terminations assembled together horizontally, as shown in Figure 36.

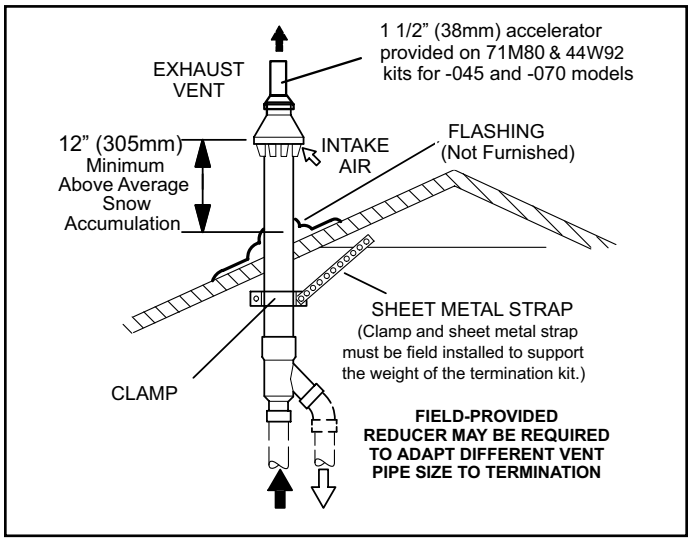

Figure 34. Direct Vent Concentric Rooftop Termination
71M80, 69M29 or 60L46 (US)
41W92 or 41W93 (Canada)

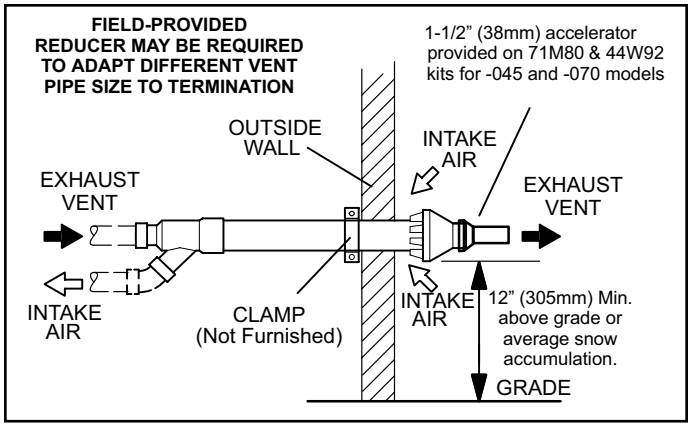

Figure 35. Direct Vent Concentric Wall Termination
71M80, 69M29 OR 60L46 (US)
41W92 or 41W93 (Canada)

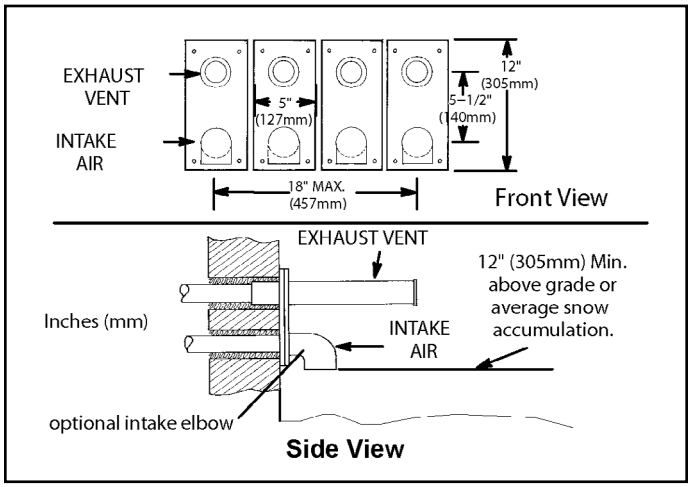

Figure 36. Optional Vent Termination for Multiple Unit Installation of Direct Vent Wall Termination Kit

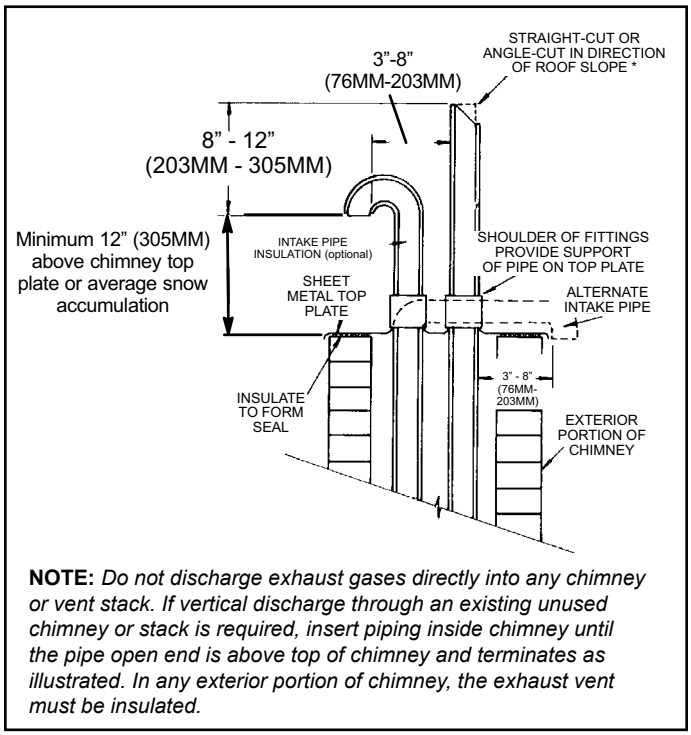

NOTE: *Do not discharge exhaust gases directly into any chimney or vent stack. If vertical discharge through an existing unused chimney or stack is required, insert piping inside chimney until the pipe open end is above top of chimney and terminates as illustrated. In any exterior portion of chimney, the exhaust vent must be insulated.*

Figure 37. Direct Vent Application Using Existing Chimney

FIELD FABRICATED WALL TERMINATION

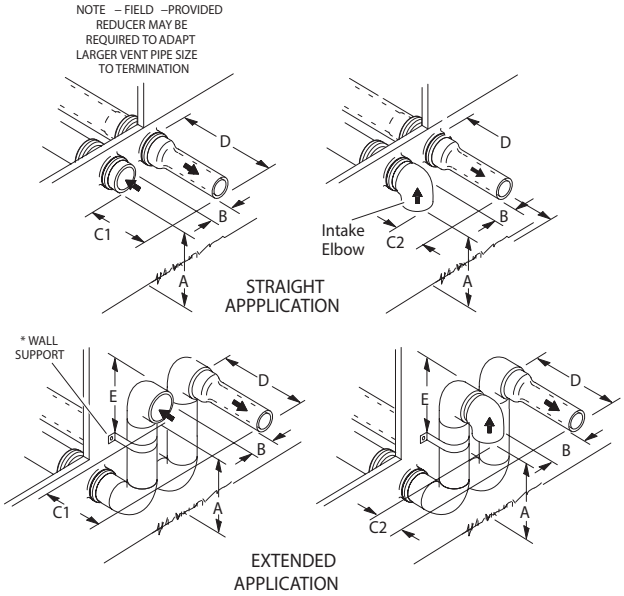

	2" (51mm) Vent Pipe	3" (76mm) Vent Pipe
A– Minimum clearance above grade or average snow accumulation	12" (305 mm)	12" (305 mm)
B– Maximum horizontal separation between intake and exhaust	6" (152 mm)	6" (152 mm)
C1 -Minimum from end of exhaust to inlet of intake	8" (203 mm)	8" (203 mm)
C2 -Minimum from end of exhaust to inlet of intake	6" (152 mm)	6" (152 mm)
D– Maximum exhaust pipe length	12" (305 mm)	20" (508 mm)
E– Maximum wall support distance from top of each pipe (intake/exhaust)	6" (152 mm)	6" (152 mm)

See maximum allowable venting tables for venting lengths with this arrangement.

* Use wall support every 24" (610 mm). Use two wall supports if extension is greater than 24" (610 mm) but less than 48" (1219 mm).

NOTE – One wall support must be within 6" (152 mm) from top of each pipe (intake and exhaust) to prevent movement in any direction.

ALTERNATE TERMINATIONS (TEE & FORTYFIVE DEGREE ELBOWS ONLY)

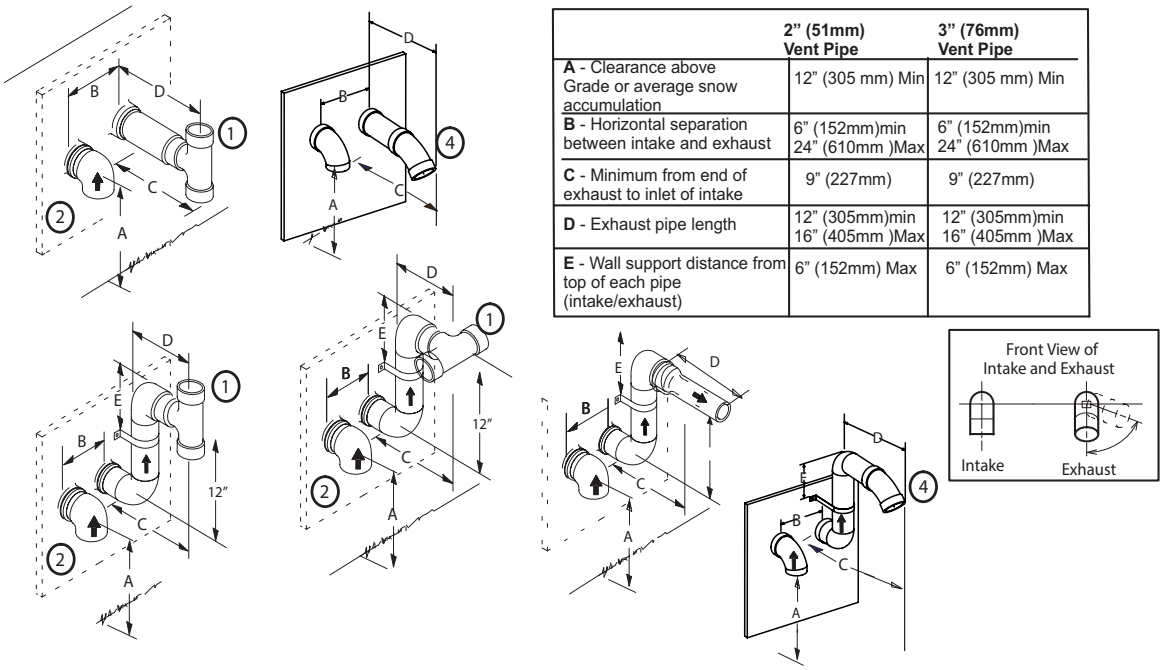

	2" (51mm) Vent Pipe	3" (76mm) Vent Pipe
A - Clearance above Grade or average snow accumulation	12" (305 mm) Min	12" (305 mm) Min
B - Horizontal separation between intake and exhaust	6" (152mm)min 24" (610mm)Max	6" (152mm)min 24" (610mm)Max
C - Minimum from end of exhaust to inlet of intake	9" (227mm)	9" (227mm)
D - Exhaust pipe length	12" (305mm)min 16" (405mm)Max	12" (305mm)min 16" (405mm)Max
E - Wall support distance from top of each pipe (intake/exhaust)	6" (152mm) Max	6" (152mm) Max

[1] The exhaust termination tee should be connected to the 2" or 3" PVC flue pipe as shown in the illustration. In horizontal tee applications there must be be a minimum of 3 ft away from covered patios or any living ares and cannot be within 3 ft of a window. Do not use an accelerator in applications that include an exhaust termination tee. The accelerator is not required.

[2] As required. Flue gas may be acidic and may adversely affect some building materials. If a side wall vent termination is used and flue gases will impinge on the building materials, a corrosion–resistant shield (24 inches square) should be used to protect the wall surface. If optional tee is used, the protective shield is recommended. The shield should be constructed using wood, sheet metal or other suitable material. All seams, joints, cracks, etc. in affected area, should be sealed using an appropriate sealant.

[3] Exhaust pipe 45 ° elbow can be rotated to the side away from the combustion air inlet to direct exhaust away from adjacent property. The exhaust must never be directed toward the combustion air inlet.

[4] Exhaust pipe can be rotated from the 12 o'clock position down to the 4o' clock position

[5] Exhaust pipe in double snorkel applications can use a 45 as an option to the accelerator tip.

Figure 38. Field-Fabricated Wall and Alternate Terminations

Details of Exhaust Piping Terminations for Non-Direct Vent Applications

Exhaust pipe may be routed either horizontally through an outside wall or vertically through the roof. In attic or closet installations, vertical termination through the roof is preferred. Figure 39 through Figure 42 show typical terminations.

1. Exhaust piping must terminate straight out or up as shown. The termination pipe must be sized as listed in Table 9. The specified pipe size ensures proper velocity required to move the exhaust gases away from the building.
2. On field supplied terminations for side wall exit, exhaust piping may extend a maximum of 12 inches (305 mm) for 2” PVC and 20” (508 mm) for 3” (76 mm) PVC beyond the outside wall. See Figure 40.
3. If exhaust piping must be run up a sidewall to position above snow accumulation or other obstructions, piping must be supported every 24” (610 mm) as shown in Figure 41. When exhaust piping must be run up an outside wall, any reduction in exhaust pipe size must be done after the final elbow.

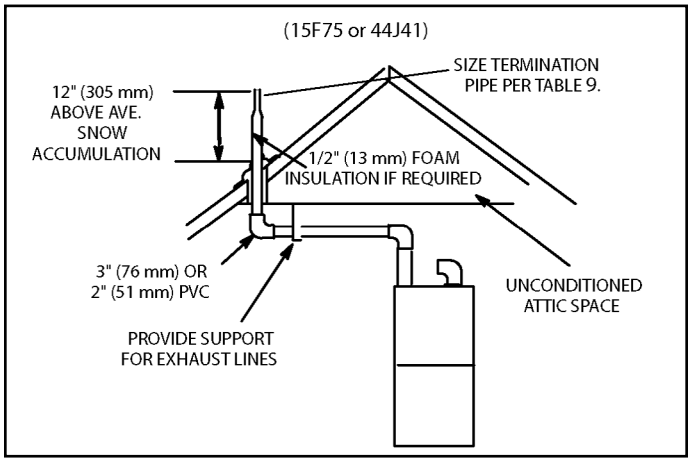

Figure 39. Non-Direct Vent Roof Termination Kit

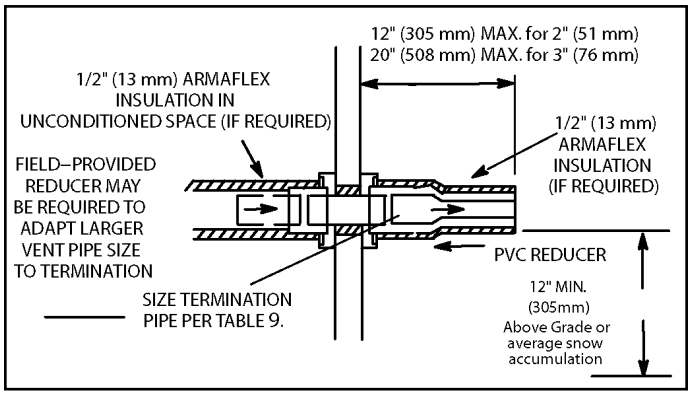

Figure 40. Non-Direct Vent Field Supplied Wall Termination

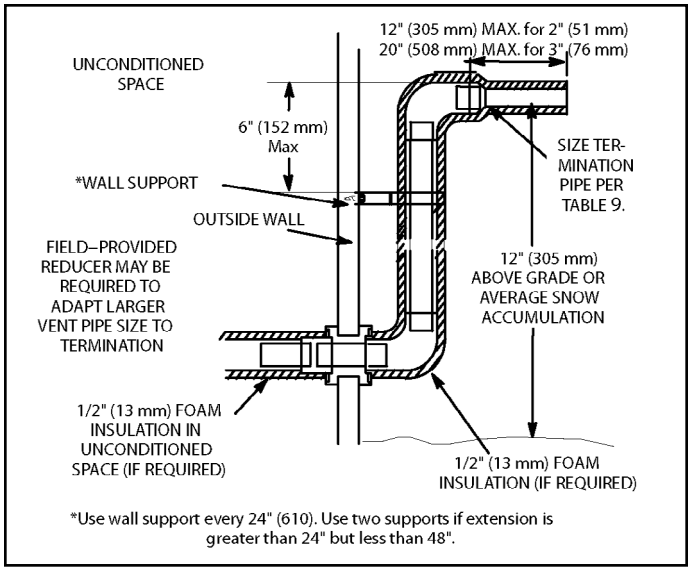

Figure 41. Non-Direct Vent Field Supplied Wall Termination Extended

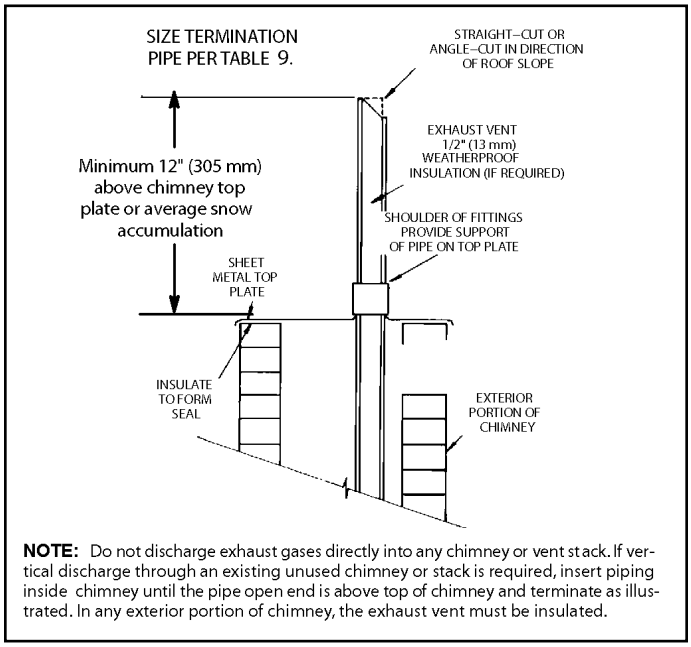

Figure 42. Non-Direct Vent Application Using Existing Chimney

Exhaust through Crawl Space Vent Option

All 33” condensing gas furnaces (92%+) are now approved to be vented down through a crawl space. Ensure a vent pipe drain kit, 51W18 (USA) or 15Z70 (Canada), is used as directed through the floor joists and into the crawl space. See the following figures.

Consult the vent tables for vent lengths and approved materials.

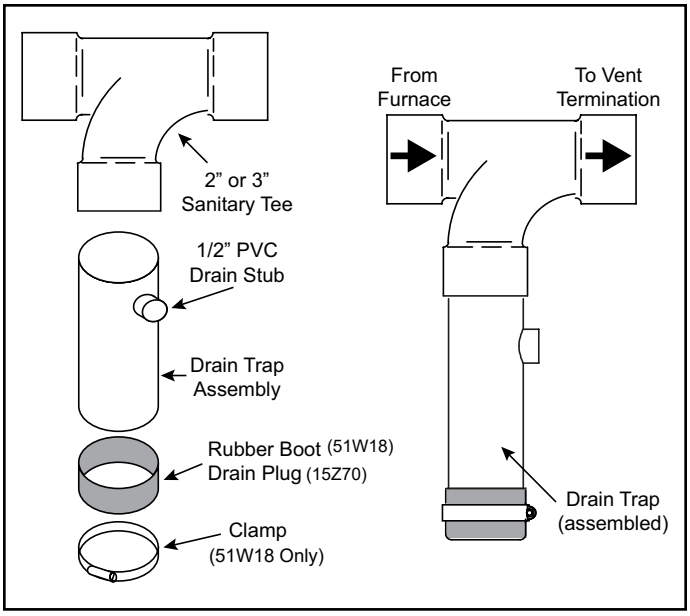

Figure 43. Kit 51W18 (USA) / 15Z70 (Canada) Parts Identification and Assembly

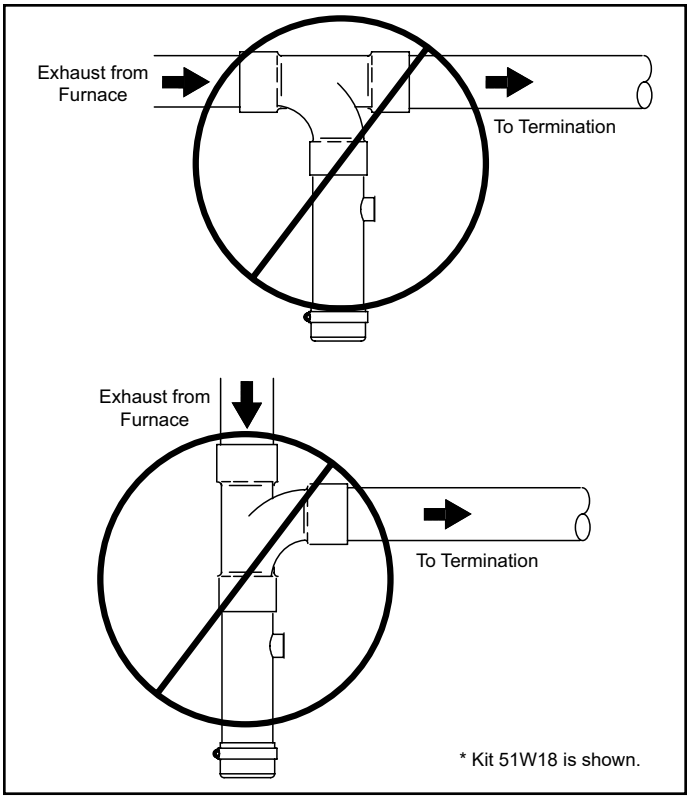

Figure 44. Crawl Space Vent Pipe Drain Trap Assembled Incorrectly

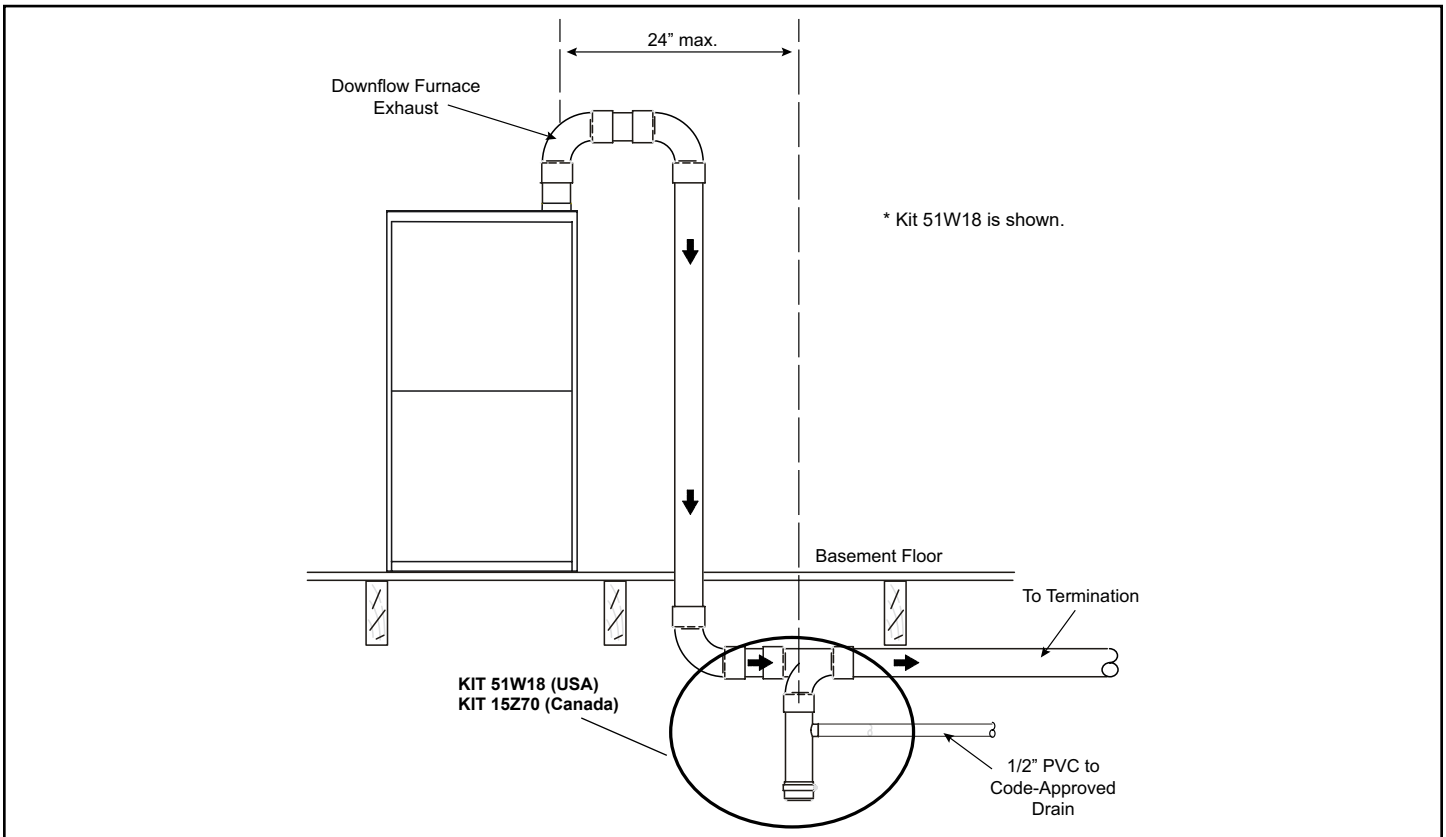

NOTE: *Upflow furnaces exhaust from the left side. All dimensions shown are typical for upflow or downflow furnaces.*

NOTE: *All horizontal runs of exhaust pipe must slope back toward the kit a minimum of 1/4" (6mm) for each 12" (305mm) to ensure drainage.*

Figure 45. Upflow or Downflow Furnace with Exhaust through Crawl Space

Condensate Piping

This unit is designed for either right or left side exit of condensate piping in downflow applications. Refer to Figure 46 for condensate trap locations.

NOTE: *If necessary the condensate trap may be installed up to 5 feet away using PVC pipe from the furnace. Piping from furnace must slope down a minimum of 1/4" per ft. toward trap.*

1. Determine which side condensate piping will exit the unit, location of trap, field-provided fittings and length of PVC pipe required to reach available drain.
2. Use a large flat head screw driver or a 1/2" drive socket extension and remove plug (Figure 46) from the cold end header box at the appropriate location on the side of the unit. Install provided 3/4 NPT street elbow fitting into cold end header box. Use Teflon tape or appropriate pipe dope.
3. Install the cap over the clean out opening at the base of the trap. Secure with clamp. See Figure 51.
4. Install drain trap using appropriate PVC fittings, glue all joints. Glue the provided drain trap as shown in Figure 51. Route the condensate line to an open drain. Condensate line must maintain a 1/4" downward slope from the furnace to the drain.

⚠ CAUTION

Do Not use copper tubing or existing copper condensate lines for drain line.

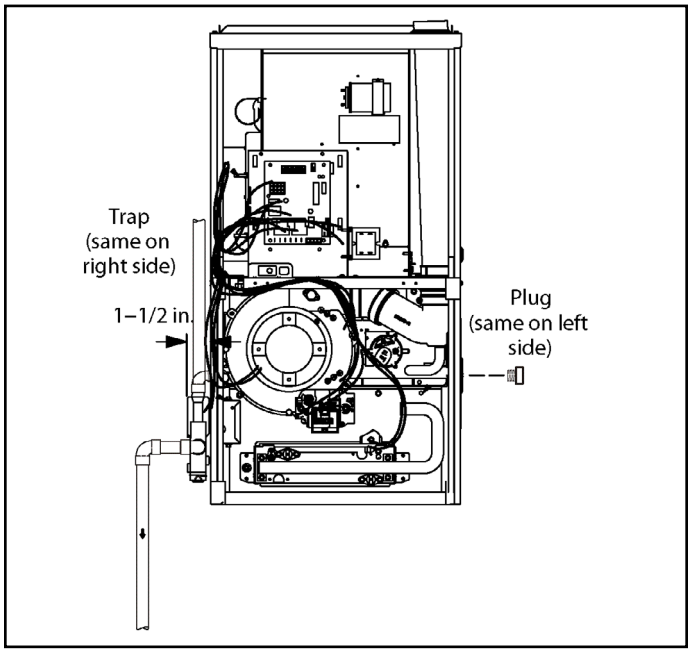

Figure 46. Condensate Trap and Plug Locations

NOTE: *Vinyl tubing may be used for condensate drain. Tubing must be 1-1/4" OD x 1" ID and should be attached to the drain on the trap using a hose clamp.*

5. Figure 48 shows the furnace and evaporator coil using a separate drain. If necessary, the condensate line from the furnace and evaporator coil can drain together. See Figure 49. The field provided vent must be a minimum 1" to a maximum 2" length above the condensate drain outlet connection.

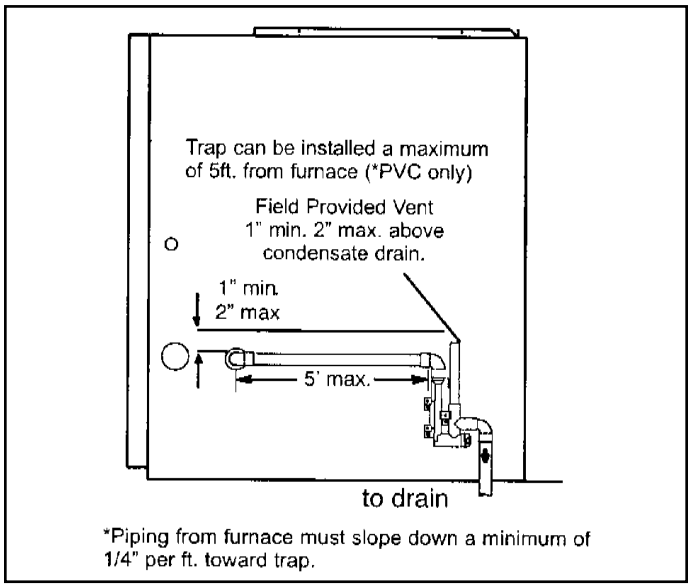

Figure 47. Condensate Trap Location (shown with right side exit of condensation)

6. If unit will be started immediately upon completion of installation, prime trap per procedure outlined in Unit Start-Up section.

Condensate line must slope downward away from the trap to drain. If drain level is above condensate trap, condensate pump must be used. Condensate drain line should be routed within the conditioned space to avoid freezing of condensate and blockage of drain line. If this is not possible, a heat cable kit may be used on the condensate trap and line.Heating cable kit is available in various lengths: 6 ft. (1.8 m) - kit no. 26K68 and 24 ft. (7.3 m) - kit no. 26K69.

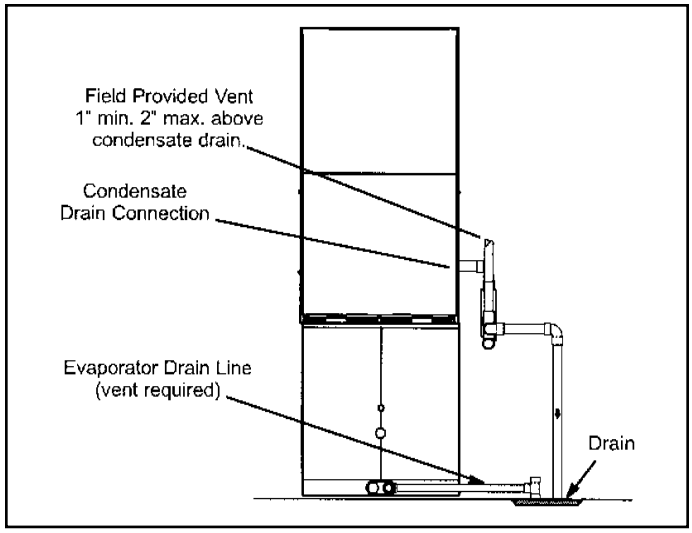

Figure 48. Evaporator Coil Using a Separate Drain

⚠ CAUTION

When combining the furnace and evaporator coil drains together, the A/C condensate drain outlet must be vented to relieve pressure in order for the furnace pressure switch to operate properly.

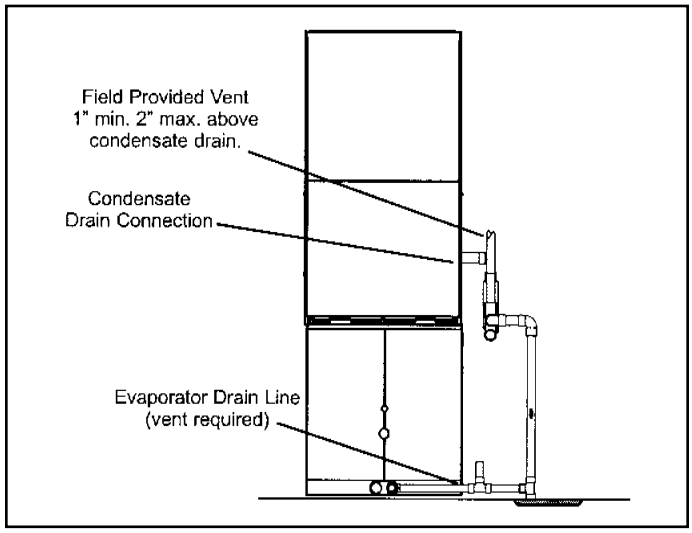

Figure 49. Evaporator Coil Using a Common Drain

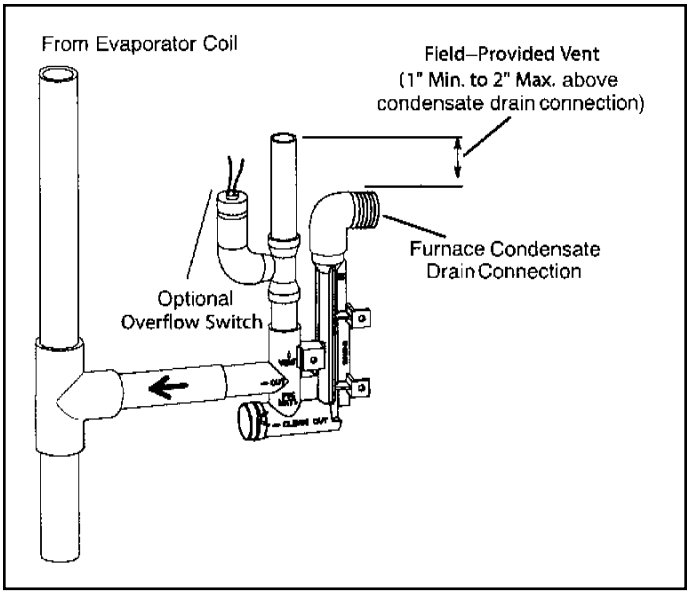

Figure 50. Condensate Trap with Optional Overflow Switch

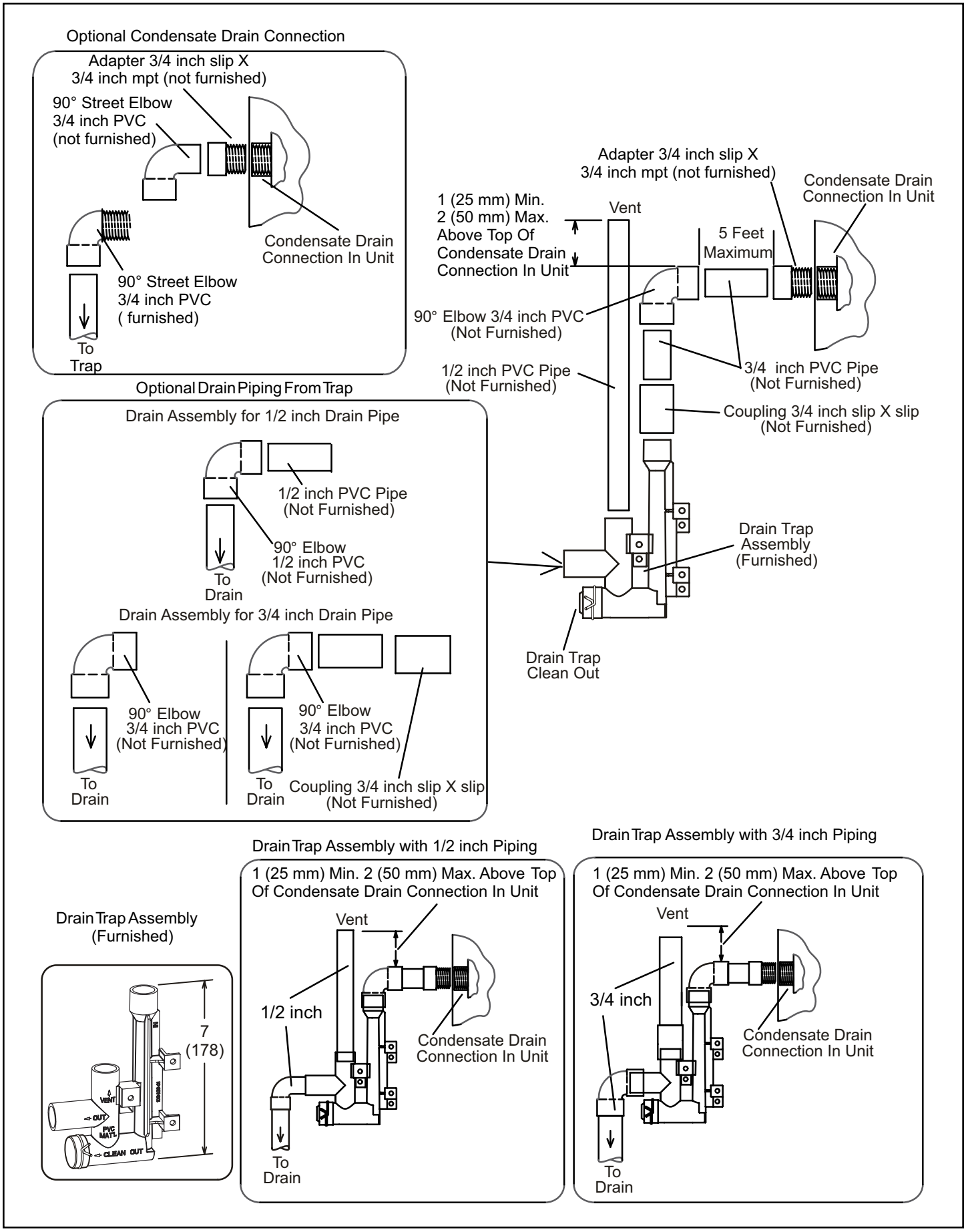

Figure 51. Trap Drain Assembly Using 1/2” PVC or 3/4” PVC

Gas Piping

⚠ CAUTION

If a flexible gas connector is required or allowed by the authority that has jurisdiction, black iron pipe shall be installed at the gas valve and extend outside the furnace cabinet. The flexible connector can then be added between the black iron pipe and the gas supply line.

⚠ WARNING

Do Not exceed 600 in. lbs. (50 ft. lbs.) torque when attaching the gas piping to the gas valve.

1. Gas piping may be routed into the unit through either the left or right hand side. Supply piping enters into the gas valve from the side of the valve as shown in Figure 53.

⚠ IMPORTANT

A low inlet pressure switch in LP/propane applications is recommended.

2. When connecting gas supply, factors such as length of run, number of fittings and furnace rating must be considered to avoid excessive pressure drop. Table 10 lists recommended pipe sizes for typical applications.

   NOTE: *Use two wrenches when connecting gas piping to avoid transferring torque to the manifold.*

3. Gas piping must not run in or through air ducts, clothes chutes, chimneys or gas vents, dumb waiters or elevator shafts. Center gas line through piping hole. Gas line should not touch side of unit. See Figure 53.
4. Piping should be sloped 1/4 inch per 15 feet (6 mm per 5.6 m) upward toward the gas meter from the furnace. The piping must be supported at proper intervals, every 8 to 10 feet (2.44 to 3.05 m), using suitable hangers or straps. Install a drip leg in vertical pipe runs to serve as a trap for sediment or condensate.
5. A 1/8” N.P.T. plugged tap or pressure post is located on the gas valve to facilitate test gauge connection.
6. In some localities, codes may require installation of a manual main shut off valve and union (furnished by installer) external to the unit. Union must be of the ground joint type.

⚠ IMPORTANT

Compounds used on threaded joints of gas piping must be resistant to the actions of liquified petroleum gases.

Leak Check

After gas piping is completed, carefully check all field-installed piping connections for gas leaks. Use a commercially available leak detecting solution specifically manufactured for leak detection. Never use an open flame to test for gas leaks.

The furnace must be isolated from the gas supply system by closing the individual manual shut-off valve during any gas supply system at pressures greater than or equal to 1/2 psig (3.48 kPa, 14 inches w.c.). This furnace and its components are designed, manufactured and independently certified to comply with all applicable ANSI/CSA standards. A leak check of the furnace and its components is not required.

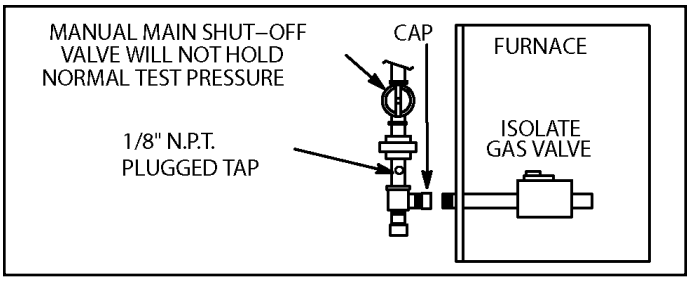

Figure 52.

⚠ IMPORTANT

When testing pressure of gas lines, gas valve must be disconnected and isolated. Gas Valves can be damaged if subjected to pressures greater than 1/2 psig (3.48 kPa).

⚠ WARNING

FIRE OR EXPLOSION HAZARD

Failure to follow the safety warnings exactly could result in serious injury, death, or property damage. Never use an open flame to test for gas leaks. Check all connections using a commercially available soap solution made specifically for leak detection. Some soaps used for leak detection are corrosive to certain metals. Carefully rinse piping thoroughly after leak test has been completed.

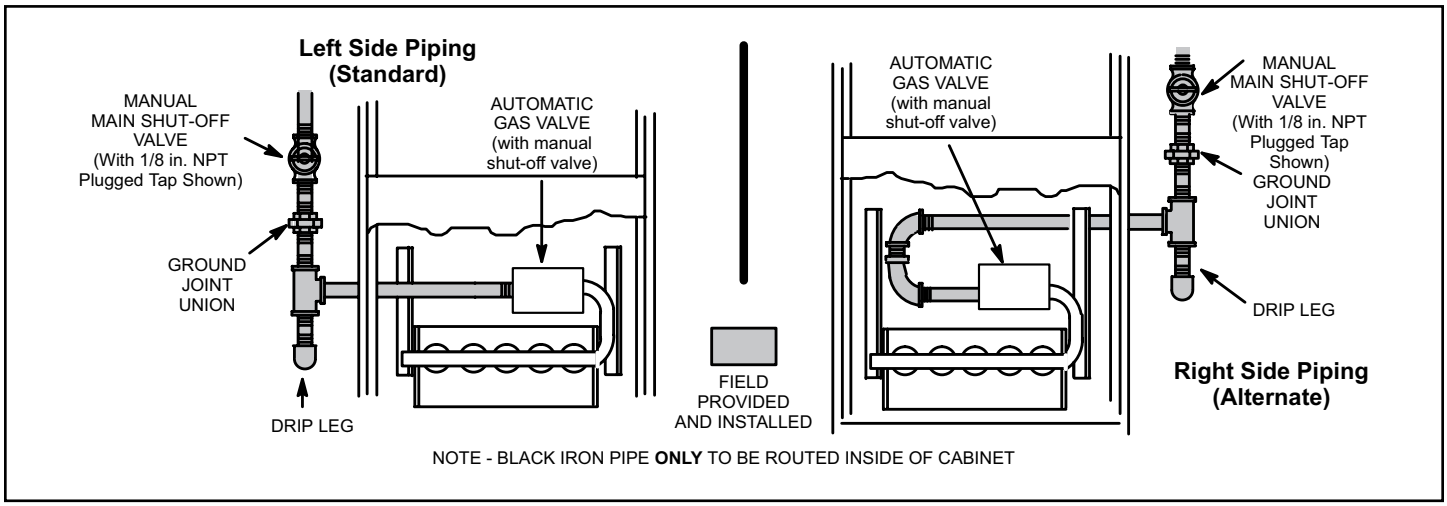

Figure 53.

Table 10.

Gas Pipe Capacity - FT³/HR (kL/HR)

Nominal Iron Pipe Size - inches (mm)	Internal Diameter - inches (mm)	Length or Pipe - feet (m)									
		10 (3.048)	20 (6.096)	30 (9.144)	40 (12.192)	50 (15.240)	60 (18.288)	70 (21.336)	80 (24.384)	90 (27.432)	100 (30.480)
1/2 (12.7)	.622 (17.799)	175 (4.96)	120 (3.40)	97 (2.75)	82 (2.32)	73 (2.07)	66 (1.87)	61 (1.73)	57 (1.61)	53 (1.50)	50 (1.42)
3/4 (19.05)	.824 (20.930)	360 (10.19)	250 (7.08)	200 (5.66)	170 (4.81)	151 (4.28)	138 (3.91)	125 (3.54)	118 (3.34)	110 (3.11)	103 (2.92)
1 (25.4)	1.049 (26.645)	680 (19.25)	465 (13.17)	375 (10.62)	320 (9.06)	285 (8.07)	260 (7.36)	240 (6.80)	220 (6.23)	205 (5.80)	195 (5.52)
1-1/4 (31.75)	1.380 (35.052)	1400 (39.64)	950 (26.90)	770 (21.80)	660 (18.69)	580 (16.42)	530 (15.01)	490 (13.87)	460 (13.03)	430 (12.18)	400 (11.33)
1-1/2 (38.1)	1.610 (40.894)	2100 (59.46)	460 (41.34)	1180 (33.41)	990 (28.03)	900 (25.48)	810 (22.94)	750 (21.24)	690 (19.54)	650 (18.41)	620 (17.56)
2 (50.8)	2.067 (52.502)	3950 (111.85)	2750 (77.87)	2200 (62.30)	1900 (53.80)	1680 (47.57)	1520 (43.04)	1400 (39.64)	1300 (36.81)	1220 (34.55)	1150 (32.56)
2-1/2 (63.5)	2.469 (67.713)	6300 (178.39)	4350 (123.17)	3520 (99.67)	3000 (84.95)	2650 (75.04)	2400 (67.96)	2250 (63.71)	2050 (58.05)	1950 (55.22)	1850 (52.38)
3 (76.2)	3.068 (77.927)	11000 (311.48)	7700 (218.03)	6250 (176.98)	5300 (150.07)	4750 (134.50)	4300 (121.76)	3900 (110.43)	3700 (104.77)	3450 (97.69)	3250 (92.03)
4 (101.6)	4.026 (102.260)	23000 (651.27)	15800 (447.39)	12800 (362.44)	10900 (308.64)	9700 (274.67)	9700 (274.67)	8100 (229.36)	7500 (212.37)	7200 (203.88)	6700 (189.72)

NOTE: *Capacity given in cubic feet of gas per hour (kilo liters of gas per hour) and based on 0.60 specific gravity gas.*

Electrical

ELECTROSTATIC DISCHARGE (ESD)
Precautions and Procedures

⚠ CAUTION

Electrostatic discharge can affect electronic components. Take precautions to neutralize electrostatic charge by touching your hand and tools to metal prior to handling the control.

⚠ WARNING

Electric Shock Hazard. Can cause injury or death. Unit must be properly grounded in accordance with national and local codes.

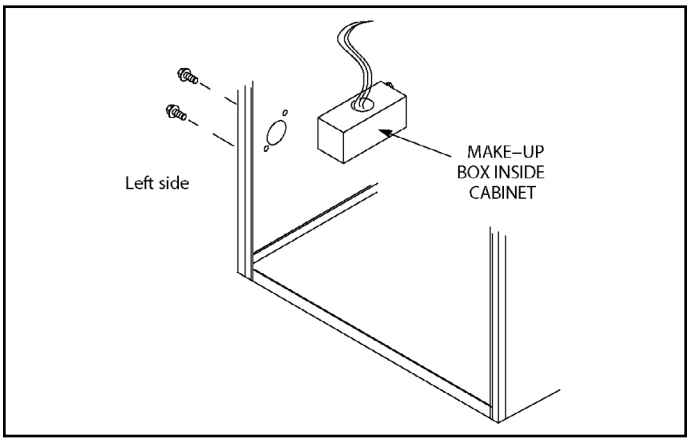

Figure 54. Interior Make-Up Box Installation Left Side

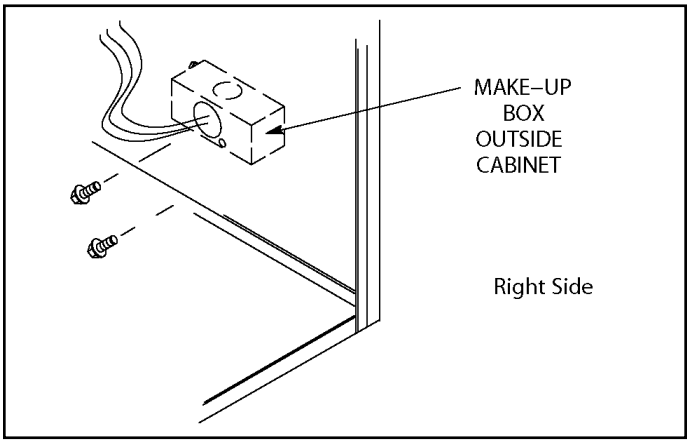

Figure 55. Interior Make-Up Box Installation Right Side

⚠ IMPORTANT

When matching this gas furnace with zoning, defrost tempering stat or other 24V accessories, It is recommended to replace the factory installed transformer with kit 27J32.

Kit 27J32 contains a 75VA transformer, so you do not overload the original 40VA transformer.

⚠ CAUTION

Failure to use properly sized wiring and circuit breaker may result in property damage. Size wiring and circuit breaker(s) per Product Specifications bulletin (EHB) and unit rating plate.

The unit is equipped with a field makeup box. The makeup box may be installed on the exterior of the right side of the furnace to facilitate installation. Secure the excess wire to the existing harness to protect it from damage.

Refer to Figure 56 for field wiring diagram and troubleshooting.

1. The power supply wiring must meet Class I restrictions. Protected by either a fuse or circuit breaker, select circuit protection and wire size according to unit nameplate.

   NOTE: *Unit nameplate states maximum current draw. Maximum over current protection allowed is shown in Table 11.*

2. Holes are on both sides of the furnace cabinet to facilitate wiring.
3. Install a separate (properly sized) disconnect switch near the furnace so that power can be turned off for servicing.

Table 11.

Model	Cooling Capacity	Maximum Over-Current Protection (Amps)
045-B	3 ton	15
070-B	4 ton	
090-C	4 ton	
110-C	5 ton	20

4. Before connecting the thermostat, check to make sure the wires will be long enough for servicing at a later date. Make sure that thermostat wire is long enough to facilitate future removal of blower for service.
5. Complete the wiring connections to the equipment. Use the provided unit wiring diagram and the field wiring diagram shown in Figure 56. Use 18 gauge wire or larger that is suitable for Class II rating for thermostat connections.

6. Electrically ground the unit according to local codes or, in the absence of local codes, according to the current National Electric Code (ANSI/NFPA No. 70). A green ground wire is provided in the field make-up box.

   NOTE: *This furnace contains electronic components that are polarity sensitive. Make sure that the furnace is wired correctly and is properly grounded.*

7. One line voltage "ACC" 1/4" spade terminal is provided on the furnace integrated control. See Figure 57 for integrated control configuration. This terminal is energized when the indoor blower is operating. Any accessory rated up to one amp can be connected to this terminal with the neutral leg of the circuit being connected to one of the provided neutral terminals. If an accessory rated at greater than one amp is connected to this terminal, it is necessary to use an external relay.
8. An unpowered, normally open (dry) set of contacts with a 1/4" spade terminal "HUM" are provided for humidifier connections and may be connected to 24V or 120V. Any humidifier rated up to one amp can be connected to these terminals. In 120V humidifier applications, the neutral leg of the circuit can be connected to one of the provided neutral terminals. This terminal is energized in the heating mode.
9. Install the room thermostat according to the instructions provided with the thermostat. If the furnace is being matched with a heat pump, refer to the instruction packaged with the dual fuel thermostat.

Indoor Blower Speeds

1. When the thermostat is set to "FAN ON," the indoor blower will run continuously on the field selectable fan speed ("LOW HEAT" is default) when there is no cooling or heating demand. See Table 27 for allowable continuous circulation speeds.
2. When the unit is running in the heating mode, the indoor blower will run on the 'LOW HEAT" or "HIGH HEAT" speed per demand.
3. When there is a cooling demand, the indoor blower will run on the "LOW COOL" or "HIGH COOL" speed per demand.

Generator Use - Voltage Requirements

The following requirements must be kept in mind when specifying a generator for use with this equipment:

- The furnace requires 120 volts ± 10% (Range: 108 volts to 132 volts).
- The furnace operates at 60 Hz ± 5% (Range: 57 Hz to 63 Hz).
- The furnace integrated control requires both polarity and proper ground. Both polarity and proper grounding should be checked before attempting to operate the furnace on either permanent or temporary power.
- Generator should have a wave form distortion of less than 5% THD (Total Harmonic Distortion).

Electrical Wiring

⚠ WARNING

Risk of electrical shock. Disconnect electrical power at the circuit breaker or service panel before making electrical connections. Failure to disconnect power supplies can result in property damage, personal injury, or death.

The furnace must be grounded and wired in accordance with local codes or, in the absence of local codes, with the National Electrical Code ANSI/NFPA No. 70 (latest edition) and/or CSA C22.1 Electrical Code (latest edition) if an external electrical source is utilized.

In all instances, other than wiring for the thermostat, the wiring to be done and any replacement of wire shall conform with the temperature limitation for Type T wire –63°F (35°C) rise.

Connect a sufficiently sized wire with ground to the furnace's line voltage connections and ground wire. Refer to the furnace rating plate for electrical characteristics to be used in sizing field supply wiring and overcurrent protection.

The line voltage supply should be routed through a readily accessible disconnect located within sight of the furnace. A junction box on the furnace side panel is provided for line voltage connections. Refer to the furnace wiring diagram for specific connection information.

Proper polarity of the supply connections ("HOT" and "NEUTRAL") must be observed to ensure that safety controls provide the protection intended.

A connection to the unit's ground wire and actual earth ground (typically a ground stake or buried steel pipe) must be maintained for proper operation.

Thermostat

Install a room thermostat according to the instructions furnished with it. Select a location on an inside wall that is not subject to drafts, direct sunshine, or other heat sources. The initial heat anticipator setting should be equal to the total current draw of the control circuit. Low voltage thermostat connections are to be made to the integrated ignition/blower control board as indicated on the wiring diagram.

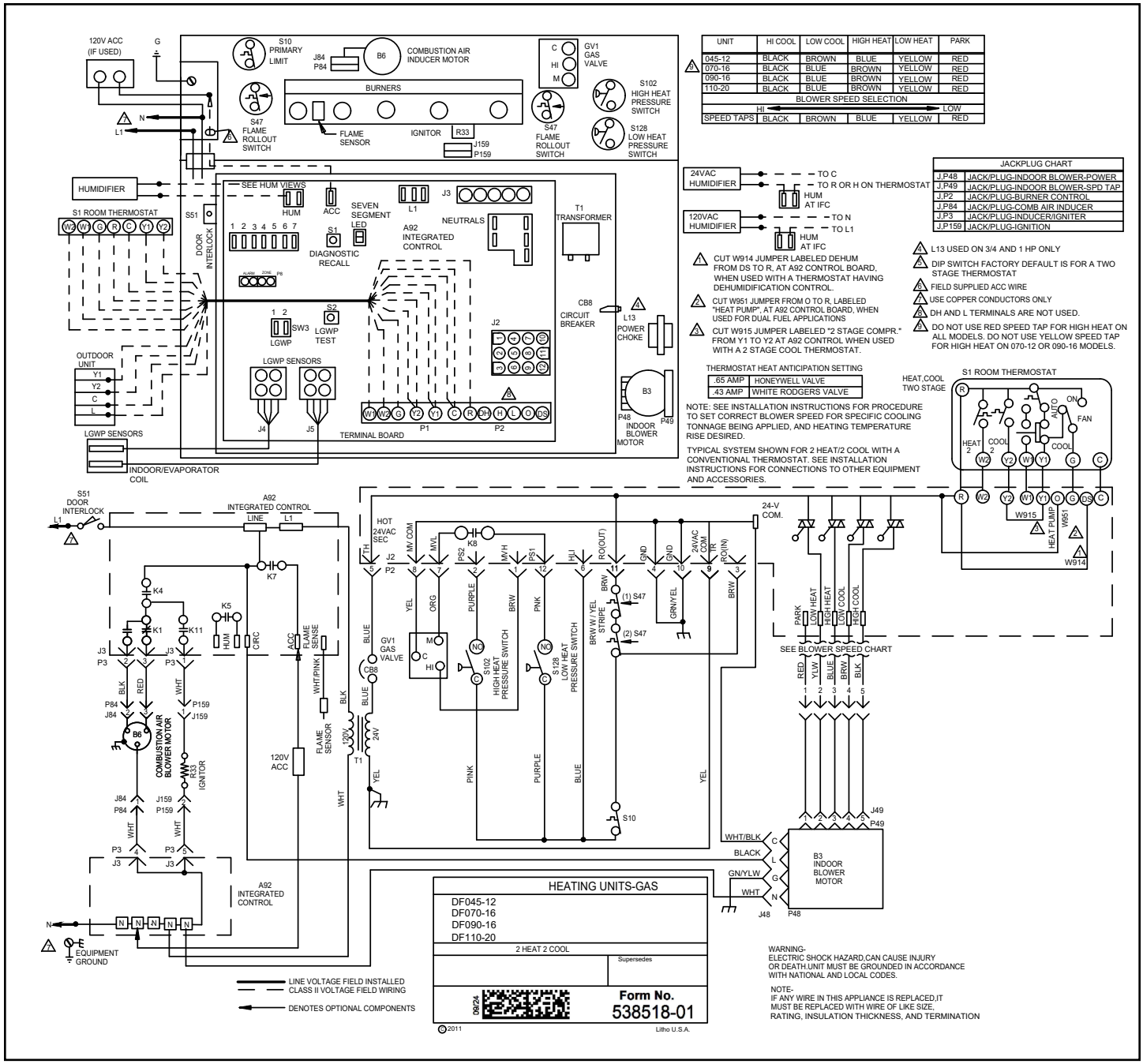

UNIT	HI COOL	LOW COOL	HIGH HEAT	LOW HEAT	PARK
045-12	BLACK	BROWN	BLUE	YELLOW	RED
070-16	BLACK	BLUE	BROWN	YELLOW	RED
090-16	BLACK	BLUE	BROWN	YELLOW	RED
110-20	BLACK	BLUE	BROWN	YELLOW	RED
BLOWER SPEED SELECTION					
HI ←					→ LOW
SPEED TAPS	BLACK	BROWN	BLUE	YELLOW	RED

JACKPLUG CHART	
J.P48	JACK/PLUG-INDOOR BLOWER-POWER
J.P49	JACK/PLUG-INDOOR BLOWER-SPD TAP
J.P2	JACK/PLUG-BURNER CONTROL
J.P84	JACK/PLUG-COMB AIR INDUCER
J.P3	JACK/PLUG-INDUCER/IGNITER
J.P159	JACK/PLUG-IGNITION

Figure 56. Wiring Diagram

TWO STAGE CONSTANT TORQUE, NON-COMMUNICATING

107897-01

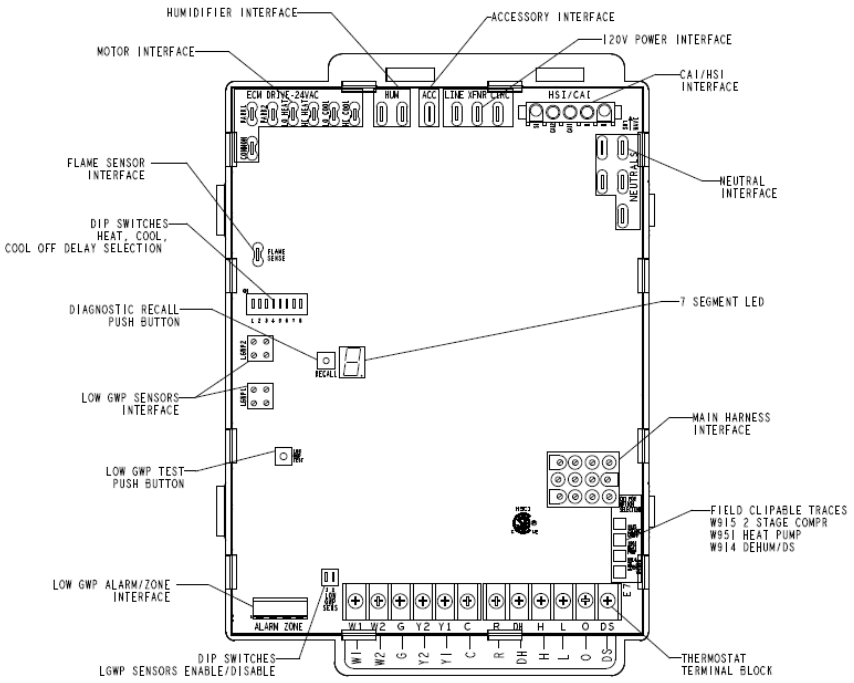

Figure 57.

Table 12.

1/4” QUICK CONNECT TERMINALS	
120V HUM	POWER FOR HUMIDIFIER (120 VAC)
LINE	INCOMING POWER LINE (120 VAC)
XFMR	TRANSFORMER PRIMARY (120 VAC)
CIRC	INDOOR BLOWER MOTOR (120 VAC)
ACC	ACCESSORY(120 VAC)
24V HUM	HUMIDIFIER (24 VAC)
NEUTRALS	NEUTRAL (5)
3/16” QUICK CONNECT TERMINALS	
LO COOL	COOL SPEED TAP FROM INDOOR BLOWER MOTOR (24 VAC)
HI COOL	COOL SPEED TAP FROM INDOOR BLOWER MOTOR (24 VAC)
LO HEAT	HEAT SPEED TAP FROM INDOOR BLOWER MOTOR (24 VAC)
HI HEAT	HEAT SPEED TAP FROM INDOOR BLOWER MOTOR (24 VAC)
FAN	CONTINUOUS FAN SPEED TAP FROM INDOOR BLOWER MOTOR (24 VAC)
FLAME SENSE	FLAME SENSOR ELECTRODE (120 VAC)
COMMON	COMMON (24 VAC)
PARK	3 TERMINALS TO PARK UNUSED MOTOR SPEED TAPS

Table 13.

THERMOSTAT INPUT TERMINALS	
W1	LOW STAGE HEAT
W2	HIGH STAGE HEAT
G	FAN
Y1	LOW STAGE COOL (when W915 is clipped)
Y2	HIGH STAGE COOL (when W915 is clipped)
C	THERMOSTAT COMMON / GROUND
R	24VAC TO THE THERMOSTAT
H	24V HUMIDIFIER OUTPUT (Unused)
L	LSOM (Unused)
O	HEAT PUMP REVERSING VALVE (when W951 is clipped)
DH	DEHUMIDIFICATION (Unused)
DS	DEHUMIDIFICATION

Table 14.

LOW GWP INTERFACE	
LGWP1	LOW GWP SENSOR #1 INTERFACE
LGWP2	LOW GWP SENSOR # 2 INTERFACE
ALARM	INTERFACE TO LOW GWP LEAK AUDIBLE ALARM (DRY CONTACT)
ZONE	INTERFACE TO LOW GWP LEAK AUDIBLE ALARM (DRY CONTACT)
LGWP TEST	PUSH BUTTON TO TEST LOW GWP FUNCTIONALITY

IGNITION CONTROL DIAGNOSTIC CODES

DIAGNOSTIC CODES / STATUS OF FURNACE	CODE
IDLE MODE (DECIMAL BLINKS AT 1 HERTZ -- 0.5 SECONDS ON, 0.5 SECONDS OFF	.
INDOOR BLOWER OPERATION: CONTINUOUS FAN MODE (CONSTANT TORQUE ONLY) INDOOR BLOWER OPERATION: FOLLOWED BY CFM SETTING FOR INDOOR BLOWER (1 SECOND ON, 0.5 SECOND OFF) / CFM SETTING FOR MODE DISPLAYED (VARIABLE SPEED ONLY)	A
COOLING STAGE (1 SECOND ON, 0.5 SECOND OFF) 1 OR 2 DISPLAYED / PAUSE / REPEAT CODES. VARIABLE SPEED ONLY	C
GAS HEAT (1 SECOND ON, 0.5 SECOND OFF) PAUSE / CFM DISPLAYED / PAUSE / REPEAT CODES BLINKING - IGNITION	H
HEAT PUMP STAGE (1 SECOND ON, 0.5 SECOND OFF) 1 OR 2 DISPLAYED / PAUSE / CFM SETTING DISPLAYED / PAUSE / REPEAT CODES	h
DEFROST MODE	dF
ERROR/FAULT CONDITION	**CODE**
NO ERROR IN THE MEMORY	E000
ELECTRICAL FAULTS (WAIT FOR RECOVERY)	
AC LINE VOLTAGE LOW	E110
TWIN COMMUNICATION FAULT (CONSTANT TORQUE ONLY)	E106
LINE VOLTAGE POLARITY REVERSED	E111
EARTH GROUND NOT DETECTED	E112
AC LINE VOLTAGE HIGH	E113
LINE VOLTAGE FREQUENCY OUT OF RANGE	E114
LOW 24V - CONTROL WILL RESTART IF THE ERROR RECOVERS	E115
HARDWARE FAULT (5 MINUTES LOCKOUT)	
CONTROL HARDWARE (INCLUDE A/D ELECTRONICS AND FLAME TEST) FAILURE	E125
HARD LOCKOUT FAULT	
ROLLOUT OPEN OR PREVIOUSLY OPENED	E200
GAS VALVE/PRESSURE SWITCH/LIMIT FAULTS (wait for recovery)	
GAS VALVE RELAY (1ST OR 2ND STAGE) PROBLEM	E204
LOW PRESSURE SW FAILED TO CLOSE (STUCK OPEN)	E223
LOW PRESSURE SW FAILED TO OPEN (STUCK CLOSED)	E224
HIGH PRESSURE SW FAILED TO CLOSE (STUCK OPEN)	E225
HIGH PRESSURE SW FAILED TO OPEN (STUCK CLOSED)	E226
LOW PRESSURE SWITCH OPENED IN RUN OR TFI	E227
FLAME SENSE OUT OF SEQUENCE-STILL PRESENT	E241
PRIMARY LIMIT SWITCH OPENED	E250
SOFT LOCKOUT FAULTS (60 MINUTES)	
GAS VALVE RELAY (1ST OR 2ND STAGE) CONTACT SHORTED	E205
HOT SURFACE IGNITOR (HSI) SENSED OPEN	E207
SOFT LOCKOUT-FLAME FAILURE ON IGNITION, IGNITION RETRY>MAX, LAST FAILED RETRY DUE TO FLAME FAILURE	E270
SOFT LOCKOUT-PRESSURE SWITCH OPEN, IGNITION RETRY>MAX, LAST FAILED RETRY DUE TO LPSW OPEN	E271
SOFT LOCKOUT-PRESSURE SWITCH OPEN, IN RUN MODE HEATING RECYCLES>MAX, LAST FAILED RETRY DUE TO LPSW OPEN	E272
SOFT LOCKOUT-FLAME FAILURE IN RUN MODE,HEATING RECYCLES>MAX, LAST FAILED RETRY DUE TO LOSS OF FLAME	E273
SOFT LOCKOUT-LIMIT OPEN > 3 MINUTES	E274
SOFT LOCKOUT-FLAME OUT OF SEQUENCE AND IS GONE	E275
IGNITOR CIRCUIT FAULT-FAILED IGNITOR OR TRIGGERING CIRCUITRY.	E290

IGNITION CONTROL DIAGNOSTIC CODES (CONTINUED)

PERFORMANCE WARNING	
POOR GROUND DETECTED	E117
IGNITION ON HIGH FIRE	E229
LOW FLAME CURRENT IN HEATING MODE	E240
LOW GWP REFRIGERANT FAULTS	
REFRIGERANT LEAK DETECTED, THERMOSTAT LOCKOUT	E150
REFRIGERANT LEAK DETECTOR SENSOR #1 FAULT	E151
REFRIGERANT LEAK DETECTOR SENSOR #2 FAULT	E152
REFRIGERANT LEAK DETECTOR SENSOR #1 COMM. LOST	E154
REFRIGERANT LEAK DETECTOR SENSOR #2 COMM. LOST	E155
REFRIGERANT LEAK DETECTOR SENSOR #1 TYPE INCORRECT	E160
REFRIGERANT LEAK DETECTOR SENSOR #2 TYPE INCORRECT	E161
REFRIGERANT LEAK DETECTOR CONTROL FAILURE	E163
LOW GWP TEST	E164
LOW GWP RELAY STUCK	E390

Low GWP Application

⚠ WARNING

For use with Allied approved evaporator coil and LGWP sensors only. Use original manufacturer recommended LGWP sensors if using non Allied approved evaporator coil.

CONNECTING THE FURNACE CONTROL BOARD SENSOR.

See Figure 60 and follow steps below:

1 - Route sensor wire #1 through provided grommet. Form a drip loop below the control board on upflow installations to prevent condensate dripping on the control board.

2 - Avoid sharp edges when routing sensor wire during installation.

3 - Sensor wire must not block view of 7 segment LED .

Ensure the cable is properly seated into the SENSOR 1 plug (LGWP1). The Molex plug clip should lock into the Molex connection point for a secured connection, as shown below in Figure 58. Verify the connection is free of dust, debris, and moisture.

NOTE - *In confined space applications, connect the second sensor to the SENSOR 2 plug (LGWP2). Refer to evaporator coil installation instructions for more detail.*

TwoStage Constant Torque Control

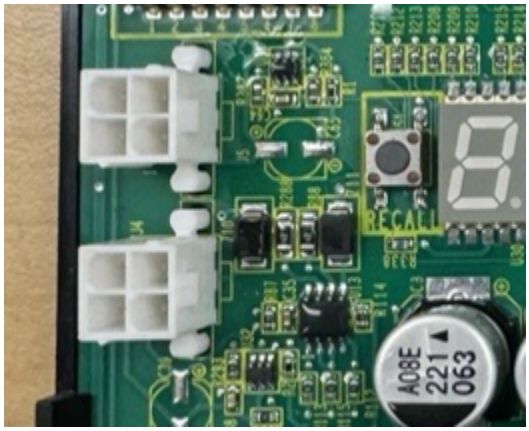

Figure 58.

LOW GWP DIP SWITCH SETTINGS

Adjust the DIP switch settings to the sensor configuration. Failure to do so will cause faults on power-up. See Figure 59 and Table 15.

Figure 59.

Table 15.

DIP Switch Settings

Configuration	Switch 1	Switch 2
One (1) sensor, connected to SENSOR 1 plug	OFF (enable)	ON (disable)
Two (2) sensors, connected to SENSOR 1 plug and SENSOR 2 plug	OFF (enable)	OFF (enable)

In single sensor configurations, the sensor must be connected to the SENSOR 1 plug (LGWP1). Configurations other than the ones shown in Table 15 will cause a servicing fault.

Each DIP switch corresponds to a sensor position (i.e., DIP switch 1 to sensor 1; DIP switch 2 to sensor 2). The default factory switch positions are set to OFF (ENABLED).

The furnace control board software reads the OFF position as an active sensor. A sensor should be present for the corresponding sensor connector. Setting the DIP switch to ON disables the sensor position.

SECONDARY SENSOR REQUIREMENTS

Additional Line Sets

If additional refrigerant line joints are present outside of the line set sleeve and a secondary refrigerant detection sensor is required, its installation must comply with the requirements listed in Refrigerant Detection Sensor Kit (27V53). See Figure 60 for routing the secondary sensor cable through the furnace cabinet.

Non-Low GWP Applications

⚠ IMPORTANT

For Furnace only applications or Furnace replacement in a Non-Low GWP applications, the Low GWP sensors should be disabled, otherwise the blower will operate continuously. To do this, the Low GWP DIP switches setting for both – Sensor 1 and the Sensor 2 must be moved to the ON position.

FURNACE CONTROL BOARD LOW GWP MODES OF OPERATION

The modes of operation for the furnace control board are Initializing, Normal, Leak Detected, and Fault.

Initializing

The furnace control board is establishing connection with the refrigerant detection sensor and is completing an initial five-minute purge sequence.

Normal

The HVAC system is functioning normally. The furnace control board has not detected a refrigerant leak.

Leak Detected

When the furnace control board detects a refrigerant leak:

1. The furnace control board shuts off the (R) input (24VAC power) to the thermostat, which de-energizes the outdoor unit compressor and heat sources, such as gas and/or electric strip heat. No heating or cooling demands will be met.
2. The furnace control board activates the blower (high speed). The blower purges refrigerant from the cabinet, plenum, and ductwork.
3. After the furnace control board determines the refrigerant levels are below the safety threshold, the blower will continue to operate for the remainder of the seven (7) - minute cycle.
4. After the blower sequence is complete, the HVAC system resumes normal operation.

NOTE - *The HVAC system may not maintain a cooling or heating setpoint if a significant leak exists. Any refrigerant leaks that remain unaddressed for an extended time may cause the HVAC system to shut down on a low refrigerant pressure limit condition.*

Fault

When a Low GWP fault is detected by the furnace control board, the indoor unit blower engages and remains engaged at a constant air flow output until the fault is cleared.

NOTE - *See"IGNITION CONTROL DIAGNOSTIC CODES (CONTINUED)" on page 39 for Low GWP diagnostic error codes.*

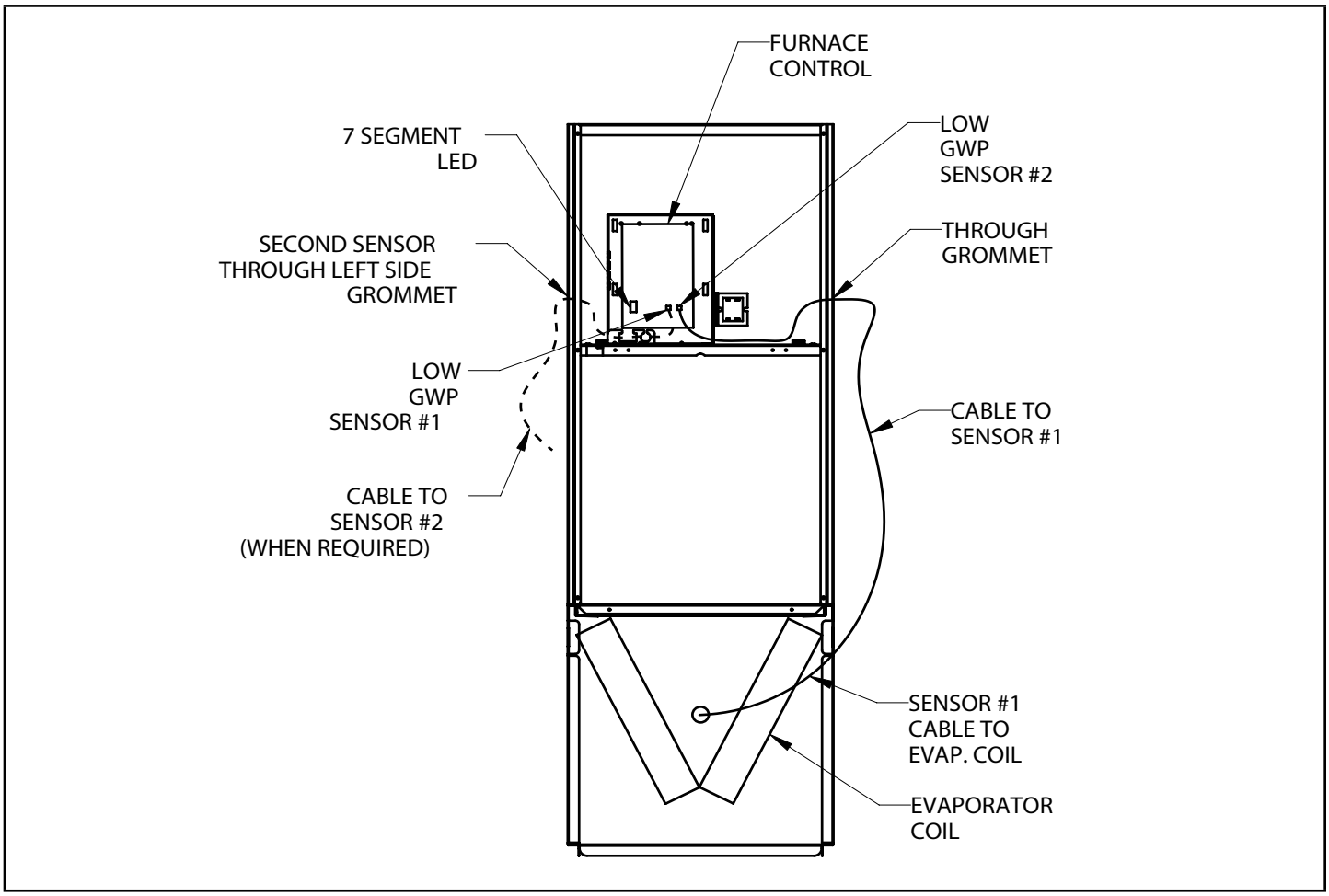

Figure 60.

LGWP TEST BUTTON FUNCTIONALITY

The furnace control board is equipped with a Test/Reset push button. The Test button can be used to perform several functions, depending on the mode of operation of the furnace control board.

Table 16 lists the functions of the Test button during each mode of operation.

Table 16.

LGWP Test Button Function

Mode of Operation	Press the Test Button to:
Normal	Trigger a leak detection response. Verify all equipment is wired correctly into the furnace blower control board (after installation).
Leak Detected	Reset the furnace control board to a normal mode of operation after a previous leak has been detected and purged from the HVAC system
Fault	Reset the furnace control board after troubleshooting and resolving a fault condition. If the fault is not resolved, the furnace control board will enter the Fault mode again.

LGWP Test Button - Additional Functions

Table 17 lists the additional functions of the Test Button while the furnace control board is functioning within the states of Initializing, Monitoring, Leak Detection, Servicing and Fault.

Table 17.

Additional Button Functions

State	Press	Action
Initializing	Short	Skips remaining pre-purge after sensors are recognized by the furnace control board
Initializing	Long	Reset control
Monitoring	Short	Clear purge-counter if prior mitigation has occurred; Test mitigation
Monitoring	Long	Reset control
Mitigating	Short	If testing mitigation, end test
Servicing	Short	Reevaluate fault condition - if cleared return to monitoring, otherwise update indicator
Servicing	Long	Reset control
Fault	Short	Reevaluate fault condition - if cleared return to monitoring, otherwise update indicator
Fault	Long	Reset control

External Alarm

(*For applications with external alarms wired directly to the furnace control board*)

The furnace control board triggers the external alarm system when it enters Leak Detected mode. For alarm notifications, the furnace control board provides a dry relay contact that is rated 3A at 30 VAC/DC.

THERMOSTAT COMPATIBILITY

Thermostats that preserve memory settings are compatible with the furnace control board. Examples include:

- Battery-powered thermostats
- Analog Thermostat
- Late-model programmable thermostats

NOTE - *Early-generation digital and programmable thermostats may not retain the operation mode and temperature setpoints after a power outage.*

The following scenarios are likely to occur when home occupants are not available to adjust the thermostat setpoints as the system is recovering from leak detection and resuming normal operation:

- Heating could be lost during a cold night
- Cooling could be lost during a hot day
- The thermostat could reset to an incorrect temperature setpoint

START UP PROCEDURE

The furnace control board is equipped with a LGWP Test/Reset button, see Test Button Functionality. After the furnace control board has been mounted and wired, restore power to the HVAC system. The system will then run through a purge sequence for five minutes. After the purge sequence is complete, proceed to testing cooling demand and heating demand.

Cooling Demand

1. Prompt a cooling demand at the thermostat.
2. Press the LGWP Test button on the furnace control board.

   The system then executes a leak detection response.
3. Observe the following sequence:
   a. The LED indicator for leak detection. See *"IGNITION CONTROL DIAGNOSTIC CODES (CONTINUED)" on page 39*.
   b. The blower powers up.
   c. The outdoor compressor powers down.
4. Press the LGWP Test button to terminate the simulated Leak Detected mode upon test completion

Heating Demand

1. Prompt a heating demand at the thermostat.
2. Press the LGWP Test button on the furnace control board.

   The system then executes a leak detection response.
3. Observe the following sequence:
   a. The LED indicator for leak detection. *See"IGNITION CONTROL DIAGNOSTIC CODES (CONTINUED)" on page 39.*
   b. The blower powers up.
   c. The gas burners power down.
   d. The outdoor compressor powers down.

4. Press the LGWP Test button to terminate the simulated Leak Detected mode upon test completion.

The installation of the furnace control board is complete after both sequences are successfully completed.

Integrated Control DIP Switch Settings

A97DF2EK & 97G2DFEK units are equipped with a two-stage integrated control. This control manages ignition timing, heating mode fan off delays and indoor blower speeds based on selections made using the control dip switches and jumpers. The control includes an internal feature which automatically resets the ignition control when it has been locked out. After one hour of continuous thermostat demand for heat, this feature will break and remake thermostat demand to the furnace and automatically reset the control to relight the furnace.

Heating Operation DIP Switch Settings

NOTE - *Switch 8 is not powered and not used. Switching from on/off will not change any output.*

Switch 1 -- Thermostat Selection -- This unit may be used with either a single-stage or two-stage thermostat. The thermostat selection is made using a DIP switch which must be properly positioned for the particular application. The DIP switch is factory-positioned for use with a two stage thermostat. If a single-stage thermostat is to be used, the DIP switch must be repositioned.

a. Select “OFF” for two-stage heating operation controlled by a two-stage heating thermostat (factory setting);

b. Select “ON” for two-stage heating operation controlled by a single-stage heating thermostat. This setting provides a timed delay before second-stage heat is initiated.

Switch 2 -- Second Stage Delay (Used with Single-Stage Thermostat Only) -- This switch is used to determine the second stage on delay when a single-stage thermostat is being used. The switch is factory-set in the OFF position, which provides a 7-minute delay before second stage heat is initiated. If the switch is toggled to the ON position, it will provide a 12-minute delay before second stage heat is initiated. This switch is only activated when the thermostat selector jumper is positioned for SINGLE stage thermostat use.

Indoor Blower Operation DIP Switch Settings

Switches 3 and 4 -- Heating Mode Blower-Off Delay -- The blower-on delay of 30 seconds is not adjustable. The blower-off delay (time that the blower operates after the heating demand has been satisfied) can be adjusted by moving switches 3 and 4 on the integrated control. The unit is shipped from the factory with a blower-off delay of 90 seconds. The blower off delay affects comfort and is adjustable to satisfy individual applications. Adjust the blower off delay to achieve a supply air temperature between 90° and 110°F at the exact moment that the blower is de-energized. Longer off delay settings provide lower supply air temperatures; shorter settings provide higher supply air temperatures. Table 18 provides the blower off timings that will result from different switch settings.

Table 18.

Blower Off Heating Mode Delay Switch Settings

Blower Off Delay Seconds	Switch 3	Switch 4
90	Off	On
120 (factory)	Off	Off
180	On	Off
210	On	On

Switch 5 -- Cooling Mode Blower-Off Delay-- The unit is shipped from the factory with the dip switch positioned OFF for a 45 second delay. Table 19 provides the cooling mode off delay settings.

Table 19.

Blower Off Cooling Mode Delay Switch Settings

Blower Off Delay Seconds	Switch 5
45 (factory)	Off
2	On

Switches 6 and 7 -- Continuous Fan Mode -- Continuous fan speed can be controlled by changing DIP switch positions. Table 20 below provides DIP switch settings for continuous fan mode.

Table 20.

Continuous Fan Mode Settings

Continuous Fan Mode	Switch 6	Switch 7
Low Heat Speed (factory setting)	Off	Off

Table 21A. Field Wiring Applications with Conventional Thermostat

Thermostat	DIP Switch Settings and On-Board Links		Wiring Connections
	DIP Switch 1 Thermostat Heating Stages	On Board Links Must Be Cut To Select System Options	
1 Heat / 1 Cool *NOTE - Use DIP switch 2 to set second-stage heat ON delay. OFF-7 minutes. ON-12 minutes.*	ON	DO NOT CUT ANY ON-BOARD LINKS 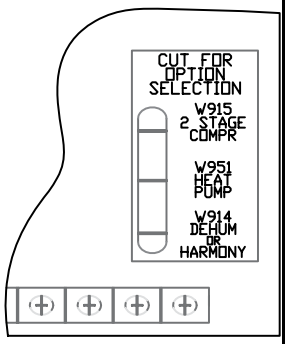	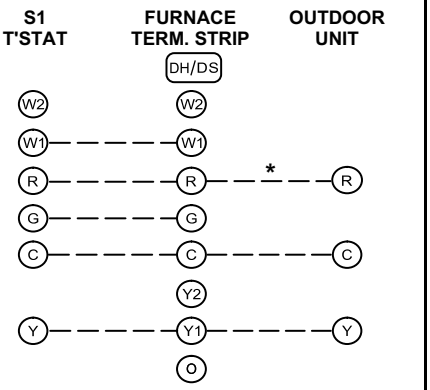
1 Heat / 2 Cool *NOTE - Use DIP switch 2 to set second-stage heat ON delay. OFF-7 minutes. ON-12 minutes.*	ON	CUT ON-BOARD LINK W915 2 STAGE COMPR 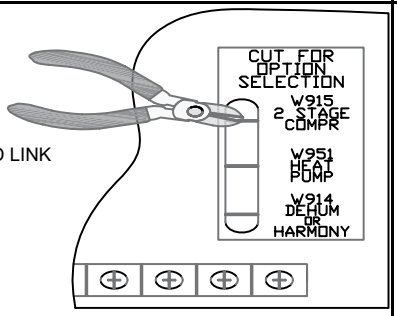	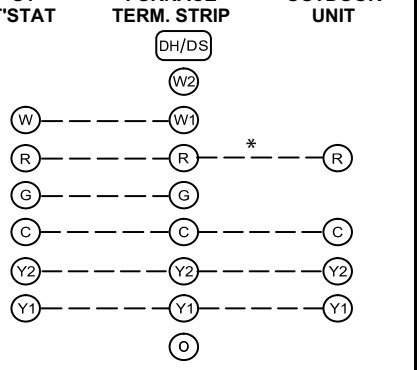
1 Heat / 2 Cool with t'stat with humidity control *NOTE - Use DIP switch 2 to set second-stage heat ON delay. OFF-7 minutes. ON-12 minutes.*	ON	CUT ON-BOARD LINK W915 2 STAGE COMPR CUT ON-BOARD LINK W914 DEHUM OR HARMONY 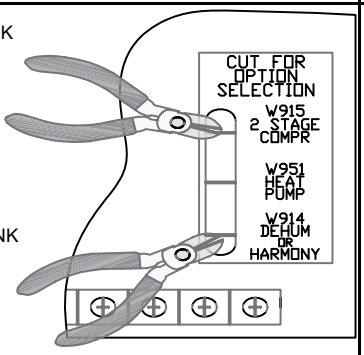	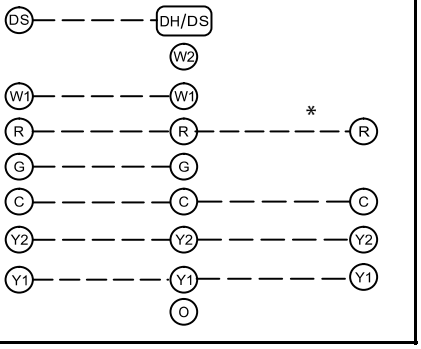

** Not required on all units.*

Table 21B. Field Wiring Applications with Conventional Thermostat (Continued)

Thermostat	DIP Switch Settings and On-Board Links		Wiring Connections
	DIP Switch 1 Thermostat Heating Stages	On Board Links Must Be Cut To Select System Options	
2 Heat / 2 Cool	OFF	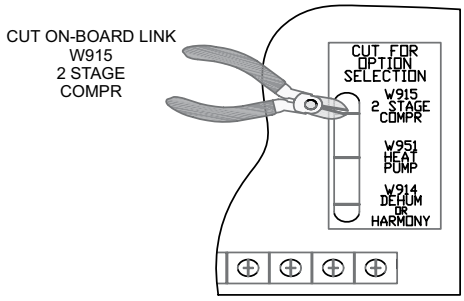	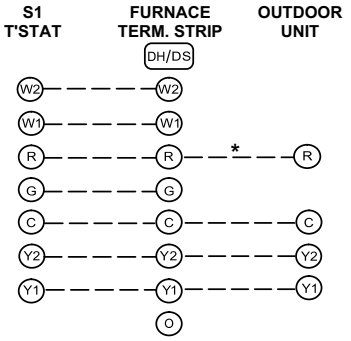
2 Heat / 2 Cool with t'stat with humidity control	OFF	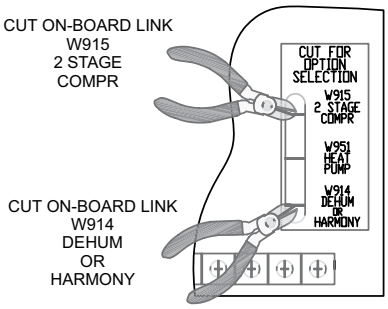	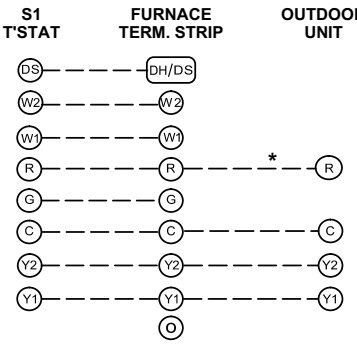
2 Heat / 1 Cool with t'stat with humidity control	OFF	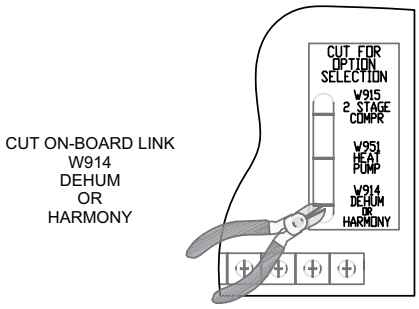	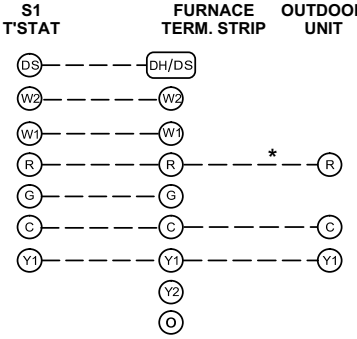
2 Heat / 1 Cool	OFF	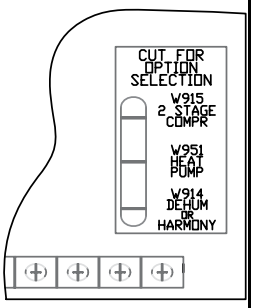	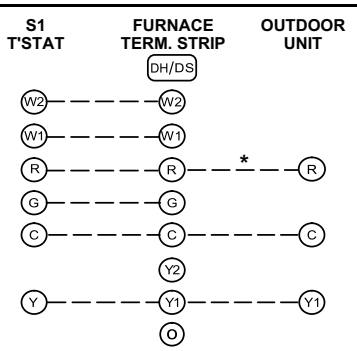

** Not required on all units.*

Table 21C. Field Wiring Applications with Conventional Thermostat (Continued)

Thermostat	DIP Switch Settings and On-Board Links		Wiring Connections
	DIP Switch 1 Thermostat Heating Stages	On Board Links Must Be Cut To Select System Options	
Dual Fuel Single Stage Heat Pump	OFF	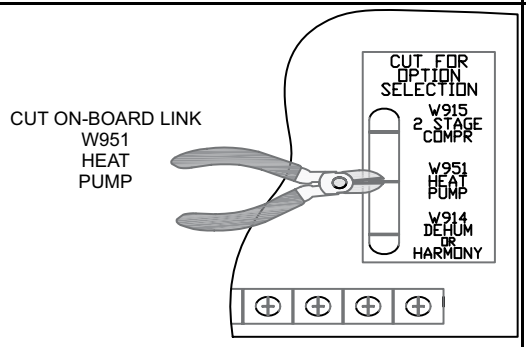	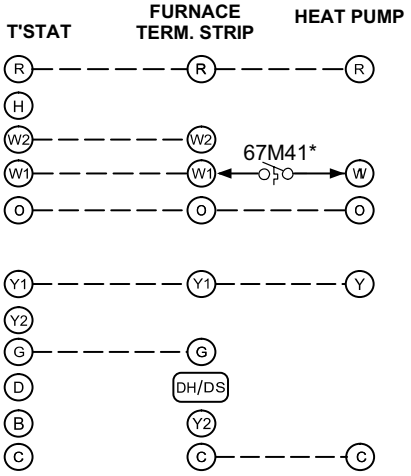
Dual Fuel Two Stage Heat Pump	OFF	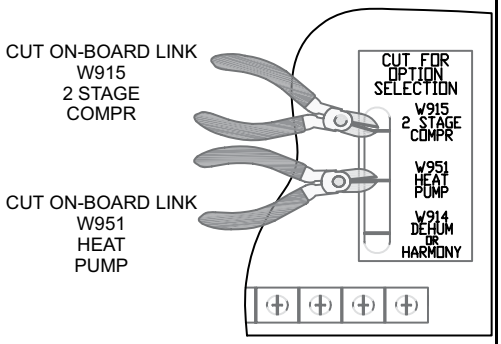	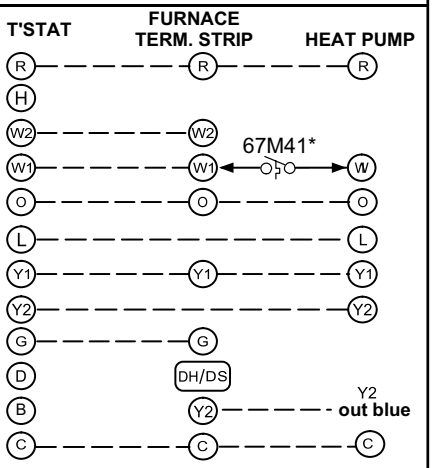

** Connect W1 to W1 ONLY if using defrost tempering kit 67M41*

*NOTE - **Do NOT** make a wire connection between the room thermostat L terminal and the L terminal of the furnace integrated control.*

Table 21D. Wiring Applications with Conventional Thermostat (Continued)

Thermostat	DIP Switch Settings and On-Board Links		Wiring Connections
	DIP Switch 1 Thermostat Heating Stages	On Board Links Must Be Cut To Select System Options	
Dual Fuel Single Stage Heat Pump	OFF	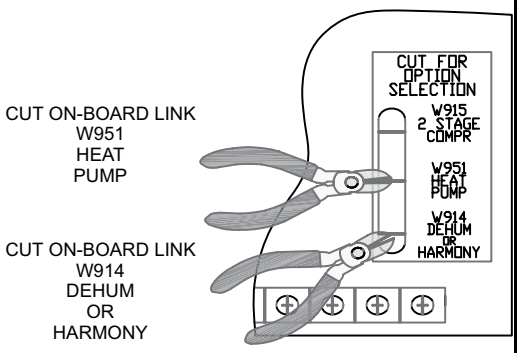	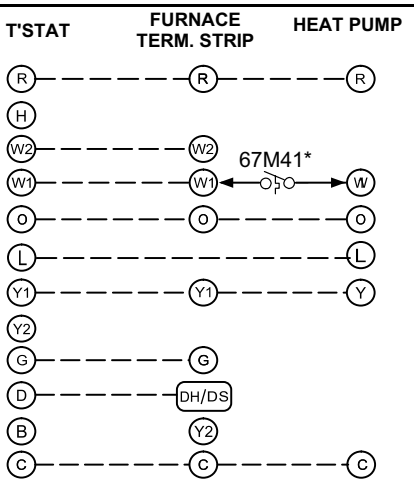
Dual Fuel Two Stage Heat Pump	OFF	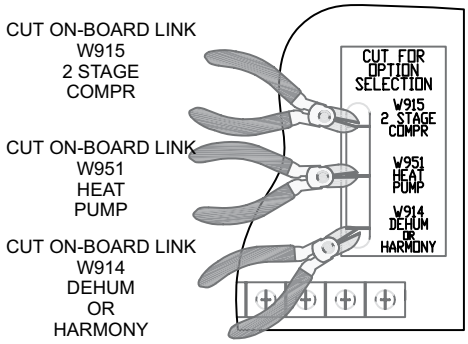	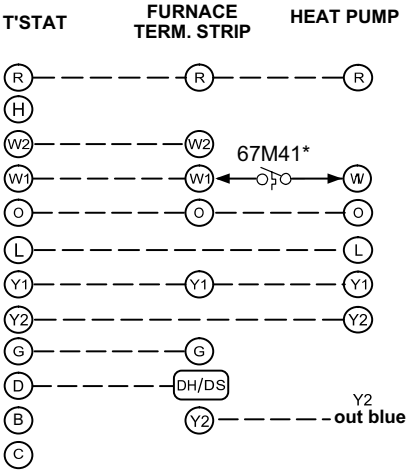

** Connect W1 to W1 ONLY if using defrost tempering kit 67M41*

*NOTE - **Do NOT** make a wire connection between the room thermostat L terminal and the L terminal of the furnace integrated control.*

Testing for Proper Venting and Sufficient Combustion Air for Non-Direct Vent Applications

⚠ WARNING

CARBON MONOXIDE POISONING HAZARD

Failure to follow the steps outlined below for each appliance connected to the venting system being placed into operation could result in carbon monoxide poisoning or death.

The following steps shall be followed for each appliance connected to the venting system being placed into operation, while all other appliances connected to the venting system are not in operation.

After the gas furnace has been started, the following test should be conducted to ensure proper venting and sufficient combustion air has been provided to the unit as well as to other gas fired appliances which are separately vented.

If this furnace replaces a Category I furnace which was commonly vented with another gas appliance, the size of the existing vent pipe for that gas appliance must be checked. Without the heat of the original furnace flue products, the existing vent pipe is probably oversized for the single water heater or other appliance. The vent should be checked for proper draw with the remaining appliance.

The test should be conducted while all appliances (both in operation and those not in operation) are connected to the venting system being tested. If the venting system has been installed improperly, or if provisions have not been made for sufficient amounts of combustion air, corrections must be made as outlined in the previous section.

1. Seal any unused openings in the venting system.
2. Visually inspect the venting system for proper size and horizontal pitch. Determine there is no blockage or restriction, leakage, corrosion, or other deficiencies which could cause an unsafe condition.
3. To the extent that it is practical, close all building doors and windows and all doors between the space in which the appliances connected to the venting system are located and other spaces of the building.
4. Close fireplace dampers.
5. Turn on clothes dryers and any appliances not connected to the venting system. Turn on any exhaust fans, such as range hoods and bathroom exhausts, so they will operate at maximum speed. Do not operate a summer exhaust fan.
6. Follow the lighting instruction to place the appliance being inspected into operation. Adjust thermostat so appliance will operate continuously.
7. Use the flame of a match or candle to test for spillage of flue gases at the draft hood relief opening after 5 minutes of main burner operation.
8. If improper venting is observed during any of the above tests, the venting system must be corrected or sufficient combustion/makeup air must be provided. The venting system should be resized to approach the minimum size as determined by using the appropriate tables in appendix G in the current standards of the National Fuel Gas Code ANSI-Z223.1/NPFA 54 in the U.S.A., and the appropriate Natural Gas and Propane appliances venting sizing tables in the current standard of the CSA-B149 Natural Gas and Propane Installation Codes in Canada.
9. After determining that each appliance remaining connected to the common venting system properly vents when tested as indicated in step 3, return doors, windows, exhaust fans, fireplace dampers and any other gas burning appliance to their previous condition of use.

Unit Start-Up

FOR YOUR SAFETY, READ BEFORE OPERATING

⚠ WARNING

Do not use this furnace if any part has been underwater. A flood-damaged furnace is extremely dangerous. Attempts to use the furnace can result in fire or explosion. Immediately call a qualified service technician to inspect the furnace and to replace all gas controls, control system parts, and electrical parts that have been wet or to replace the furnace, if deemed necessary.

⚠ WARNING

Danger of explosion. Can cause injury or product or property damage. Should the gas supply fail to shut off or if overheating occurs, shut off the gas valve to the furnace before shutting off the electrical power.

⚠ CAUTION

Before attempting to perform any service or maintenance, turn the electrical power to unit OFF at disconnect switch.

BEFORE LIGHTING the unit, smell all around the furnace area for gas. Be sure to smell next to the floor because some gas is heavier than air and will settle on the floor.

The gas valve on the unit is equipped with a gas control switch (lever). Use only your hand to move switch. Never use tools. If the switch will not move by hand, do not try to repair it. Force or attempted repair may result in a fire or explosion.

Placing the Furnace into Operation

This furnace is equipped with an automatic hot surface ignition system. Do not attempt to manually light burners on this furnace. Each time the thermostat calls for heat, the burners will automatically light. The ignitor does not get hot when there is no call for heat on these units.

Priming Condensate Trap

The condensate trap should be primed with water prior to start-up to ensure proper condensate drainage. Either pour 10 fl. oz. (300 ml) of water into the trap, or follow these steps to prime the trap:

1. Follow the lighting instructions to place the unit into operation.
2. Set the thermostat to initiate a heating demand.
3. Allow the burners to fire for approximately 3 minutes.
4. Adjust the thermostat to deactivate the heating demand.
5. Wait for the combustion air inducer to stop. Set the thermostat to initiate a heating demand and again allow the burners to fire for approximately 3 minutes.
6. Adjust the thermostat to deactivate the heating demand and wait for the combustion air inducer to stop. At this point, the trap should be primed with sufficient water to ensure proper condensate drain operation.

⚠ WARNING

If you do not follow these instructions exactly, a fire or explosion may result causing property damage, personal injury or death.

Gas Valve Operation

1. **STOP!** Read the safety information at the beginning of this section.
2. Set the thermostat to the lowest setting.
3. Turn OFF all electrical power to the unit.
4. This furnace is equipped with an ignition device which automatically lights the burners. Do not try to light the burners by hand.
5. Remove the heating compartment access panel.
6. Move gas valve switch to OFF. See Figure 61.
7. Wait five minutes to clear out any gas. If you then smell gas, **STOP!** Immediately call your gas supplier from a neighbor's phone. Follow the gas supplier's instructions. If you do not smell gas go to next step.
8. Move gas valve switch to ON. See Figure 61.

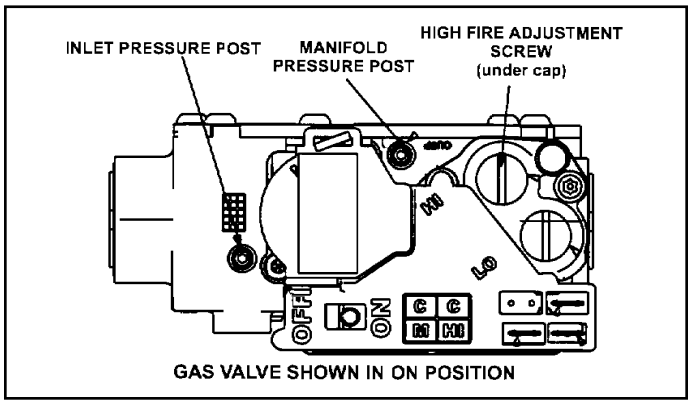

Figure 61. Gas Valve Shown In "ON' Position

9. Replace the heating compartment access panel.
10. Turn on all electrical power to the unit.
11. Set the thermostat to desired setting.

    NOTE: *When unit is initially started, steps 1 through 11 may need to be repeated to purge air from gas line.*

12. If the appliance will not operate, follow the instructions "Turning Off Gas to Unit" and call your service technician or gas supplier.

Turning Off Gas to Unit

1. Set the thermostat to the lowest setting.
2. Turn off all electrical power to the unit if service is to be performed.
3. Remove the heating compartment access panel.
4. Move gas valve switch to OFF.
5. Replace the heating compartment access panel.

Gas Pressure Adjustment

Gas Flow (Approximate)

Table 22.

Gas Meter Clocking Chart				
Model	Seconds for One Revolution			
	Natural		LP	
	1 cu ft Dial	2 cu ft Dial	1 cu ft Dial	2 cu ft Dial
045	80	160	200	400
070	55	110	136	272
090	41	82	102	204
110	33	66	82	164
	Natural - 1000 btu/cu ft		LP- 2500 btu/cu ft	

Furnace should operate at least 5 minutes before checking gas flow. Determine time in seconds for two revolutions of gas through the meter. (Two revolutions assures a more accurate time.) Divide by two and compare to time in Table 22. If manifold pressure matches Table 24 and rate is incorrect, check gas orifices for proper size and restriction. Remove temporary gas meter if installed.

NOTE: *To obtain accurate reading, shut off all other gas appliances connected to meter.*

Supply Pressure Measurement

A pressure post on the inlet side of the gas valve provides access to the supply pressure. Back out the 3/32 Hex screw one turn, connect a piece of 5/16" tubing and connect a manometer to measure supply pressure.

NOTE: *Shut unit off and remove manometer as soon as an accurate reading has been obtained. Take care to re-tighten the 3/32 Hex screw.*

Manifold Pressure Measurement

1. A manifold post located on the gas valve provides access to the manifold pressure. See Figure 61. Back out the 3/32 Hex screw one turn, connect a piece of 5/16" tubing and connect to a manometer to measure manifold pressure.
2. Start unit and allow 5 minutes for unit to reach steady state.
3. While waiting for the unit to stabilize, observe the flame. Flame should be stable and should not lift from burner. Natural gas should burn blue.
4. After allowing unit to stabilize for 5 minutes, record manifold pressure and compare to value given in Table 24.

NOTE: *Shut unit off and remove manometer as soon as an accurate reading has been obtained. Take care to re-tighten the 3/32 Hex screw.*

Proper Combustion

Furnace should operate minimum 15 minutes with correct manifold pressure and gas flow rate before checking combustion. Take combustion sample beyond the flue outlet and compare to the table below. The maximum carbon monoxide reading should not exceed 100 ppm.

Table 23.

Model	CO_2 % For Nat		CO_2 % For LP	
	Low Fire	High Fire	Low Fire	High Fire
045	5.6 - 6.6	7.8 - 8.8	6.6 - 7.6	9.1 - 10.1
070	5.6 - 6.5	7.3 - 8.3	6.5 - 7.5	8.6 - 9.6
090	5.9 - 6.9	7.8 - 8.8	6.9 - 7.9	9.1 - 10.1
110	6.63 - 7.3	8.2 - 9.2	7.3 - 8.3	9.5 - 10.5
The maximum carbon monoxide reading should not exceed 100 ppm.				

High Altitude Information

NOTE: *In Canada, certification for installations at elevations over 4500 feet (1371 m) is the jurisdiction of local authorities.*

Units may be installed at altitudes up to 10,000 ft. above sea level without manifold adjustment. Units installed at altitude of 4501 - 10,000 feet (1371 to 3048 m) may require a pressure switch change which can be ordered separately. Table 25 lists conversion kit and pressure switch requirements at varying altitudes.

The combustion air pressure switch is factory-set and requires no adjustment.

NOTE: *A natural to LP/propane gas changeover kit is necessary to convert this unit. Refer to the changeover kit installation instruction for the conversion procedure.*

Table 24. Manifold and Supply Line Pressure 0 - 10,000 ft.

Model	Gas	Manifold Pressure in w.g.										Supply Line Pressure in w.g. 0 - 10000 ft.	
		0 - 4500 ft.		4501 - 5500 ft.		5501 - 6500ft.		6501 - 7500ft.		7501-10000ft.			
		Low Fire	High Fire	Low Fire	High Fire	Low Fire	High Fire	Low Fire	High Fire	Low Fire	High Fire	Min.	Max.
All Models	Natural	1.7	3.5	1.6	3.3	1.5	3.2	1.5	3.1	1.7	3.5	4.5	13.0
	Lp/ Propane	4.5	10.0	4.2	9.4	4.0	9.1	3.9	8.9	4.5	10.0	11.0	13.0

Other Unit Adjustments

Primary Limit
The primary limit is located on the heating compartment vestibule panel. This limit is factory set and requires no adjustment.

Flame Rollout Switches (Two)
These manually reset switches are located on the front of the burner box. These limits are factory set and require no adjustment.

Pressure Switch
The pressure switch is located in the heating compartment on the cold end header box. This switch checks for proper combustion air inducer operation before allowing ignition trial. The switch is factory set and must not be adjusted.

Temperature Rise
After the furnace has been started and supply and return air temperatures have been allowed to stabilize, check the temperature rise. If necessary, adjust the blower speed to maintain the temperature rise within the range shown on the unit nameplate. See Table 26 for allowable heating speeds. Increase the blower speed to decrease the temperature. Decrease the blower speed to increase the temperature rise. Failure to adjust the temperature rise may cause erratic limit operation.

Blower Control
The blower ON time of 30 seconds is not adjustable. The blower OFF delay (amount of time that the blower operates after the heat demand has been satisfied) is 120 seconds and is not adjustable.

Thermostat Heat Anticipation
Set the heat anticipator setting (if adjustable) according to the amp draw listed on the wiring diagram that is attached to the unit.

Electrical
1. Check all wiring for loose connections.
2. Check for the correct voltage at the furnace (with furnace operating). Correct voltage is 120 VAC ± 10%.
3. Check amp–draw on the blower motor with the blower compartment access panel in place.

   Motor Nameplate_____Actual_____

Electronic Ignition
The integrated control has an added feature of an internal Watchguard soft lockout control. The feature serves as an automatic reset device for integrated control lockout caused by ignition failure. This type of lockout is usually due to low gas line pressure. After one hour of continuous thermostat demand for heat, the Watchguard feature will break and remake thermostat demand to the furnace and automatically reset the integrated control to begin the ignition sequence.

Exhaust and Air Intake Pipe
1. Check exhaust and air intake connections for tightness and to make sure there is no blockage.
2. Is pressure switch closed? Obstructed exhaust pipe will cause unit to shut off at pressure switch. Check termination for blockages.
3. Obstructed pipe or termination may cause rollout switches to open. Reset manual flame rollout switches on burner box assembly if necessary.

Table 25. Conversion Kit Fan Pressure Switch Requirements at Varying Altitudes

Model	Natural to LP/Propane	High Altitude Natural Burner Orifice Kit	High Altitude LP/Propane Burner Orifice Kit	High Altitude Pressure Switch	
	0 - 7500 ft (0 - 2286m)	7501 - 10000 ft (2286 - 3048m)	7501 - 10000 ft (2286 - 3048m)	4501 - 7500 ft (1371 - 2286m)	7501 - 10000 ft (2286 - 3048m)
045	11K48	*51W01	11K47	32C80	32C81
070				32C78	14A54
090				14A54	32C81
110				32L29	32L30

*Conversion requires installation of a gas valve manifold spring which is provided with the gas conversion kit.

Pressure switch is factory set. No adjustment necessary. All models use the factory-installed pressure switch from 0-4500 feet (0-1371 m).

Table 26.

Allowable Heating Speeds											
Model	Cooling Capacity	Low Fire Heating Speeds					High Fire Heating Speeds				
		Red	Yellow	Blue	Brown	Black	Red	Yellow	Blue	Brown	Black
045	3 ton	Allowed	Factory Setting	Not Allowed	Not Allowed	Not Allowed	Not Allowed	Allowed	Factory Setting	Allowed	Allowed
070	4 ton	Allowed	Factory Setting	Allowed	Not Allowed	Not Allowed	Not Allowed	Allowed	Allowed	Factory Setting	Allowed
090	4 ton	Allowed	Factory Setting	Allowed	Not Allowed	Not Allowed	Not Allowed	Allowed	Allowed	Factory Setting	Allowed
110	5 ton	Allowed	Factory Setting	Not Allowed	Not Allowed	Not Allowed	Not Allowed	Allowed	Allowed	Factory Setting	Allowed

Table 27.

Allowable Circulation Speeds					
Model	Red	Yellow	Blue	Brown	Black
All models	Allowed	Factory Setting	Not Allowed	Not Allowed	Not Allowed

Blower Performance

A97DF2E045B12SK BLOWER PERFORMANCE (less filter)

External Static Pressure in. w.g.	Air Volume / Watts at Various Blower Speeds									
	High (Black)		Medium-High (Brown)		Medium (Blue)		Medium-Low (Yellow)		Low (Red)	
	cfm	Watts	cfm	Watts	cfm	Watts	cfm	Watts	cfm	Watts
0.00	1466	371	1313	266	1198	207	963	119	902	97
0.10	1434	383	1275	277	1169	217	921	126	860	106
0.20	1401	395	1237	288	1140	227	879	134	817	115
0.30	1363	398	1211	297	1101	238	833	140	773	122
0.40	1300	383	1179	308	1070	243	798	151	733	131
0.50	1228	367	1151	316	1036	256	755	156	692	136
0.60	1146	343	1105	319	1005	263	710	163	645	144
0.70	1058	318	1038	309	971	272	672	170	598	154
0.80	930	286	942	284	909	272	614	179	557	158
0.90	807	251	811	251	799	251	569	184	518	163
1.00	645	222	669	224	630	216	532	189	473	169

A97DF2E070B16SK BLOWER PERFORMANCE (less filter)

External Static Pressure in. w.g.	Air Volume / Watts at Various Blower Speeds									
	High (Black)		Medium-High (Brown)		Medium (Blue)		Medium-Low (Yellow)		Low (Red)	
	cfm	Watts	cfm	Watts	cfm	Watts	cfm	Watts	cfm	Watts
0.00	1743	468	1546	327	1377	231	1271	187	1055	105
0.10	1709	485	1510	339	1336	240	1226	196	991	114
0.20	1675	501	1474	350	1294	249	1180	204	927	122
0.30	1638	513	1437	362	1244	261	1127	215	863	130
0.40	1601	529	1386	376	1187	270	1082	226	797	139
0.50	1563	541	1353	388	1139	282	1033	232	727	147
0.60	1511	539	1310	401	1100	293	979	245	661	155
0.70	1445	525	1272	410	1048	304	940	255	604	159
0.80	1339	499	1234	421	1013	313	862	264	531	174
0.90	1243	470	1161	424	952	326	811	272	481	182
1.00	1119	439	1092	414	907	330	763	281	435	192

A97DF2E090C16SK BLOWER PERFORMANCE (less filter)

External Static Pressure in. w.g.	Air Volume / Watts at Various Blower Speeds									
	High (Black)		Medium-High (Brown)		Medium (Blue)		Medium-Low (Yellow)		Low (Red)	
	cfm	Watts	cfm	Watts	cfm	Watts	cfm	Watts	cfm	Watts
0.00	1792	429	1553	294	1420	225	1348	194	1228	146
0.10	1750	446	1520	308	1389	240	1306	206	1179	158
0.20	1708	463	1487	323	1359	254	1265	217	1130	171
0.30	1685	477	1456	339	1326	264	1228	230	1090	182
0.40	1630	478	1421	350	1274	281	1192	239	1046	192
0.50	1558	462	1394	363	1246	291	1157	251	989	202
0.60	1458	432	1354	373	1209	300	1114	264	952	210
0.70	1371	408	1312	381	1177	314	1079	271	913	220
0.80	1231	368	1234	366	1138	324	1038	282	861	230
0.90	1118	343	1093	336	1093	327	997	291	843	237
1.00	1008	315	976	309	987	306	952	292	794	242

Blower Performance

A97DF2E110C20SK BLOWER PERFORMANCE (less filter)

External Static Pressure in. w.g.	Air Volume / Watts at Various Blower Speeds									
	High (Black)		Medium-High (Brown)		Medium (Blue)		Medium-Low (Yellow)		Low (Red)	
	cfm	Watts	cfm	Watts	cfm	Watts	cfm	Watts	cfm	Watts
0.00	2211	681	1962	459	1799	351	1679	302	1494	214
0.10	2174	694	1920	474	1754	365	1631	312	1441	225
0.20	2136	706	1877	488	1709	379	1583	322	1387	237
0.30	2095	718	1832	500	1658	391	1530	332	1323	247
0.40	2058	734	1792	512	1617	403	1487	345	1276	256
0.50	2006	742	1745	525	1570	413	1433	354	1223	265
0.60	1940	727	1704	538	1523	426	1379	368	1168	276
0.70	1863	702	1665	550	1479	436	1340	377	1110	290
0.80	1765	669	1622	563	1439	445	1288	388	1061	293
0.90	1673	642	1582	572	1398	454	1254	397	1013	304
1.00	1559	599	1522	568	1354	466	1214	407	949	311

Service

⚠ WARNING

ELECTRICAL SHOCK, FIRE, OR EXPLOSION HAZARD.

Failure to follow safety warnings exactly could result in dangerous operation, serious injury, death or property damage.

Improper servicing could result in dangerous operation, serious injury, death, or property damage.

Before servicing, disconnect all electrical power to furnace.

When servicing controls, label all wires prior to disconnecting. Take care to reconnect wires correctly. Verify proper operation after servicing.

At the beginning of each heating season, system should be checked as follows by a qualified service technician:

Blower

Check the blower wheel for debris and clean if necessary. The blower motors are pre-lubricated for extended bearing life. No further lubrication is needed.

⚠ WARNING

The blower access panel must be securely in place when the blower and burners are operating. Gas fumes, which could contain carbon monoxide, can be drawn into living space resulting in personal injury or death.

Filters

All air filters are installed external to the unit. Filters should be inspected monthly. Clean or replace the filters when necessary to ensure proper furnace operation. Table 3 lists recommended filter sizes.

Exhaust and Air Intake Pipes

Check the exhaust and air intake pipes and all connections for tightness and to make sure there is no blockage.

NOTE: *After any heavy snow, ice or frozen fog event the furnace vent pipes may become restricted. Always check the vent system and remove any snow or ice that may be obstructing the plastic intake or exhaust pipes.*

Electrical

1. Check all wiring for loose connections.
2. Check for the correct voltage at the furnace (furnace operating). Correct voltage is 120 VAC ± 10%.
3. Check amp-draw on the blower motor with the blower compartment access panel in place.

   Motor Nameplate_____Actual_____

Winterizing and Condensate Trap Care

1. Turn off power to the furnace.
2. Have a shallow pan ready to empty condensate water.
3. Remove the clean out cap from the condensate trap and empty water. Inspect the trap then reinstall the clean out cap.

Cleaning the Burner Assembly

1. Turn off electrical and gas power supplies to furnace. Remove upper and lower furnace access panels.
2. Disconnect from the gas valve.
3. Remove the burner box cover.
4. Disconnect the gas supply line from the gas valve. Remove gas valve/manifold assembly.
5. Mark and disconnect sensor wire from the sensor. Disconnect 2 pin plug from the ignitor at the burner box.
6. Remove four screws which secure burner box assembly to vest panel. Remove burner box from the unit.
7. Gently clean the face of the burners using the soft brush attachment on a vacuum cleaner. Visually inspect the inside of the burners and crossovers for any blockage caused by foreign matter. Remove any blockage and inspect for damage. Replace if damage by rust or foreign matter cannot be removed.
8. Reconnect the sensor wire and reconnect the 2 pin plug to the ignitor wiring harness.
9. Reinstall the burner box assembly using the existing four screws. Make sure that the burners line up in the center of the burner ports.
10. Reinstall the gas valve manifold assembly. Reconnect the gas supply line to the gas valve. Reinstall the burner box cover.
11. Reconnect wires to gas valve.
12. Replace the blower compartment access panel.
13. Refer to instruction on verifying gas and electrical connections when re-establishing supplies.
14. Follow lighting instructions to light and operate furnace for 5 minutes to ensure that heat exchanger is clean and dry and that furnace is operating properly.
15. Replace heating compartment access panel.

Planned Service

A service technician should check the following items during an annual inspection. Power to the unit must be shut off for safety.

Fresh air grilles and louvers (on the unit and in the room where the furnace is installed) - Must be open and unobstructed to provide combustion air.

Burners - Must be inspected for rust, dirt, or signs of water.

Vent pipe - Must be inspected for signs of water, cracked, damaged or sagging pipe, or disconnected joints.

Unit appearance - Must be inspected for rust, dirt, signs of water, burnt or damaged wires, or components.

Blower access door - Must be properly in place and provide a seal between the return air and the room where the furnace is installed.

Return air duct - Must be properly attached and provide an air seal to the unit.

Operating performance - Unit must be observed during operation to monitor proper performance of the unit and the vent system.

Combustion gases - Flue products must be analyzed and compared to the unit specifications.

Problems detected during the inspection may make it necessary to temporarily shut down the furnace until the items can be repaired or replaced.

Instruct the homeowners to pay attention to their furnace. Situations can arise between annual furnace inspections that may result in unsafe operation. For instance, items innocently stored next to the furnace may obstruct the combustion air supply. This could cause incomplete combustion and the production of carbon monoxide gas.

Low GWP Sensor/Sleeve

Inspect the low GWP sensor / sensors and rubber sleeve

Repair Parts List

The following repair parts are available through Allied Air dealers. When ordering parts, include the complete furnace model number listed on the CSA nameplate. Example: A95DF2V045B12S-01. All service must be performed by a licensed professional installer (or equivalent), service agency, or gas supplier.

Cabinet Parts

- Heating Compartment Access Panel
- Blower Compartment Access Panel
- Top Cap

Control Panel Parts

- Transformer
- Integrated Control Board
- Door Interlock Switch

Blower Parts

- Blower Wheel
- Motor
- Motor Mounting Frame
- Motor Choke
- Blower Housing Cutoff Plate

Heating Parts

- Flame Sensor
- Heat Exchanger Assembly
- Gas Manifold
- Combustion Air Inducer
- Gas Valve
- Main Burner Cluster
- Main Burner Orifices
- Pressure Switch
- Ignitor
- Primary Limit Control
- Flame Rollout Switches

Refrigerant Detection System Parts

- Refrigerant Detection Sensor
- Refrigerant Line Set Sleeve

Requirements for Commonwealth of Massachusetts

Modifications to NFPA-54, Chapter 10

Revise NFPA-54 section 10.8.3 to add the following requirements:
For all side wall, horizontally vented, gas-fueled equipment installed in every dwelling, building or structure used in whole or in part for residential purposes, including those owned or operated by the Commonwealth and where the side wall exhaust vent termination is less than seven (7) feet above the finished grade in the area of the venting, including but not limited to decks and porches, the following requirements shall be satisfied:

1. **INSTALLATION OF CARBON MONOXIDE DETECTORS**. At the time of installation of the side wall, horizontally vented, gas-fueled equipment, the installing plumber or gas fitter shall observe that a hard-wired carbon monoxide detector with an alarm and battery backup is installed on the floor level where the gas equipment is to be installed. In addition, the installing plumber or gas fitter shall observe that a battery-operated or hard-wired carbon monoxide detector with an alarm is installed on each additional level of the dwelling, building or structure served by the side wall, horizontally vented, gas-fueled equipment. It shall be the responsibility of the property owner to secure the services of qualified licensed professionals for the installation of hard-wired carbon monoxide detectors.
   a. In the event that the side wall, horizontally vented, gas-fueled equipment is installed in a crawl space or an attic, the hard-wired carbon monoxide detector with alarm and battery backup may be installed on the next adjacent floor level.
   b. In the event that the requirements of this subdivision cannot be met at the time of completion of installation, the owner shall have a period of thirty (30) days to comply with the above requirements; provided, however, that during said thirty (30) day period, a battery-operated carbon monoxide detector with an alarm shall be installed.
2. **APPROVED CARBON MONOXIDE DETECTORS**. Each carbon monoxide detector as required in accordance with the above provisions shall comply with NFPA 720 and be ANSI/UL 2034 listed and IAS certified.
3. **SIGNAGE**. A metal or plastic identification plate shall be permanently mounted to the exterior of the building at a minimum height of eight (8) feet above grade directly in line with the exhaust vent terminal for the horizontally vented, gas-fueled heating appliance or equipment. The sign shall read, in print size no less than one-half (1/2) inch in size, **"GAS VENT DIRECTLY BELOW. KEEP CLEAR OF ALL OBSTRUCTIONS."**
4. **INSPECTION**. The state or local gas inspector of the side wall, horizontally vented, gas-fueled equipment shall not approve the installation unless, upon inspection, the inspector observes carbon monoxide detectors and signage installed in accordance with the provisions of 248 CMR 5.08(2)(a) 1 through 4.

EXEMPTIONS: The following equipment is exempt from 24 CMR 5.08(2)(a) 1 through 4:

1. The equipment listed in Chapter 10 entitled "Equipment Not Required to Be Vented" in the most current edition of NFPA 54 as adopted by the Board; and
2. Product Approved side wall, horizontally vented, gas-fueled equipment installed in a room or structure separate from the dwelling, building or structure used in whole or in part for residential purposes.

MANUFACTURER REQUIREMENTS - GAS EQUIPMENT VENTING SYSTEM PROVIDED.

When the manufacturer of Product Approved side wall, horizontally vented, gas-fueled equipment provides a venting system design or venting system components with the equipment, the instructions provided by the manufacturer for installation of the equipment and the venting system shall include:

1. Detailed instructions for the installation of the venting system design or the venting system components: and
2. A complete parts list for the venting system design or venting system.

MANUFACTURER REQUIREMENTS - GAS EQUIPMENT VENTING SYSTEM NOT PROVIDED.

When the manufacturer of Product Approved sidewall, horizontally vented, gas-fueled equipment does not provide the parts for venting the flue gases, but identifies "special venting systems," the following requirements shall be satisfied by the manufacturer:

1. The referenced "special venting system" instructions shall be included with the appliance or equipment installation instructions; and
2. The "special venting systems" shall be Product Approved by the Board, and the instructions for that system shall include a parts list and detailed installation instructions.

A copy of all installation instructions for all Product Approved side wall, horizontally vented, gas-fueled equipment, all venting instructions, all parts lists for venting instructions, and/or all venting design instructions shall remain with the appliance or equipment at the completion of the installation.