A972EK
PRODUCT SPECIFICATIONS

TWO STAGE HIGH EFFICIENCY CONSTANT TORQUE GAS FURNACE

FORM NO. A972EK-100 (11/2026)



CONFIGURATIONS
- Upflow / Horizontal
- Downflow

HEAT EXCHANGER DESIGN
- 409 Stainless steel primary heat exchanger with crimped non-welded construction
- AL29-4C Stainless steel secondary heat exchanger

BURNERS
- Aluminized steel in shot burners for smooth ignition
- Isolated burner enclosure for quiet operation

CABINET CONSTRUCTION
- Compact 33" height
- Standardized widths for easy coil fit

AIR DELIVERY SYSTEM
- Constant torque ECM
- Efficient blower motor
- Easily removable slide-out blower design
- Dynamically balanced blower wheel with resilient motor mounts for smooth and quiet operation

CONTROLS
- Two stage gas valve
- Integrated ignition and fan control
- System Sentry™ control retains last ten (10) fault codes with push button memory recall and 7 segment LED display, regardless of power interruption
- Hot surface ignition system uses silicon nitride ignitor
- Control features 120 volt electronic air cleaner and humidifier terminals
- Control circuit is fuse protected
- Color coded control wiring
- Compatible with single or two stage thermostats for heating Two stage thermostat is recommended when installed with two stage cooling unit.

VENTING
- 2-speed induced draft motor with stainless steel shaft, steel ball bearings, and fan cooled for long life
- Vent materials for Canadian applications must comply with ULC S636
- Certified for direct vent and indirect vent (1 and 2 pipe) applications

INSTALLATION FEATURES
- Left or right gas and electric entry
- Zero step horizontal conversion
- Removable floor base (upflow/horizontal units) for bottom return air
- All models comply with California's South Coast Air Quality Management district Low NOx requirements

WARRANTY
10 year limited parts warranty / lifetime heat exchanger warranty available. See limited warranty document for details.

California Only
If installed in South Coast Air Quality Management District (SCAQMD) only: This furnace does not meet the SCAQMD Rule 1111 NOx emission limit (14 ng/J), and thus is subject to a mitigation fee of up to $450. This furnace is not eligible for the Clean Air Furnace Rebate Program: www.CleanAirFurnaceRebate.com. If installed in San Joaquin Valley Air Pollution Control District (SJVAPCD) only: This furnace does not meet the SJVAPCD Rule 4905 NOx emission limit (14 ng/J), and thus is subject to a mitigation fee of up to $450.

ENERGY STAR

DESIGN CERTIFIED

AHRI CERTIFIED www.ahridirectory.org

AHRI CERTIFIED www.ahridirectory.org

PFAS

MODEL NUMBER GUIDE

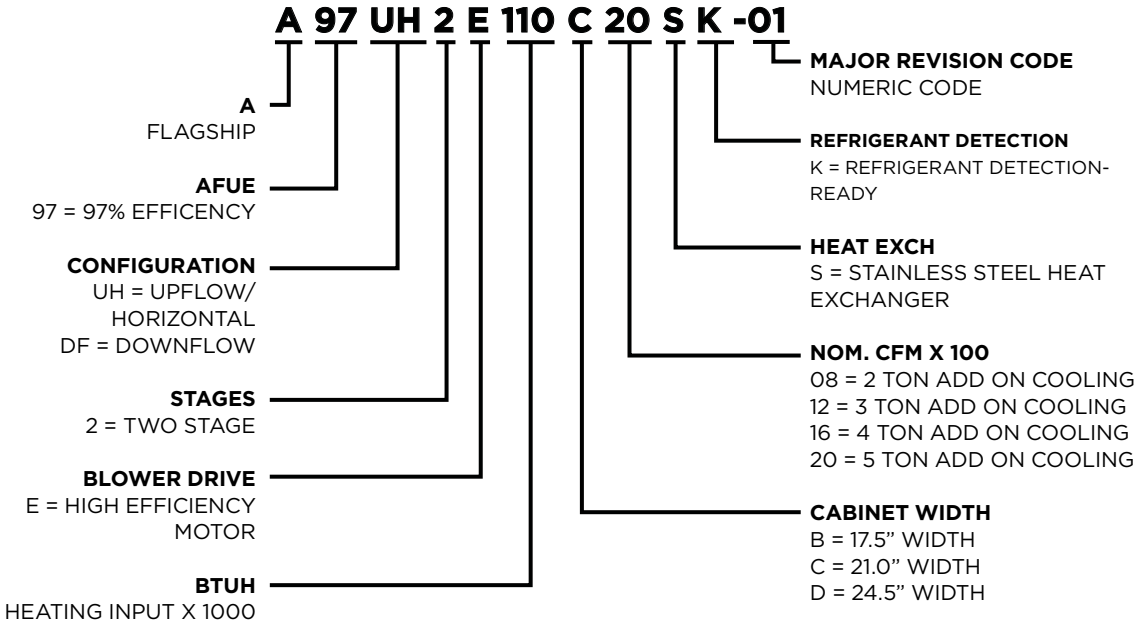

PHYSICAL AND ELECTRICAL DATA

	Model	1st Stage		2nd Stage		AFUE (ICUS)	Nom. Cooling Capacity (tons)	Gas Inlet (in.)	Volts/ Hz/ Phase	Min. Time Delay Breaker or Fuse	Nominal F.L.A.	Trans. (V.A.)	Approx. Weight (lbs.)
		Input (Btuh)	Output (Btuh)	Input (Btuh)	Output (Btuh)								
UPFLOW / HORIZONTAL	A97UH2E030B08SK	20,000	19,000	30,000	29,000	97.0	2	1/2	120-60-1	15	6.8	40	120
	A97UH2E045B12SK	29,000	28,000	44,000	43,000	97.0	3	1/2	120-60-1	15	6.8	40	121
	A97UH2E070B12SK	43,000	42,000	66,000	65,000	97.0	3	1/2	120-60-1	15	6.8	40	129
	A97UH2E090C16SK	57,000	56,000	88,000	86,000	97.0	4	1/2	120-60-1	15	8.4	40	151
	A97UH2E110C20SK	72,000	71,000	110,000	108,000	97.0	5	1/2	120-60-1	15	10.9	40	160
DOWNFLOW	A97DF2E045B12SK	29,000	28,000	44,000	43,000	97.0	3	1/2	120-60-1	15	---	40	124
	A97DF2E070B16SK	43,000	42,000	66,000	65,000	97.0	4	1/2	120-60-1	15	---	40	138
	A97DF2E090C16SK	57,000	56,000	88,000	86,000	97.0	5	1/2	120-60-1	20	10.9	40	153
	A97DF2E110C20SK	72,000	70,000	110,000	108,000	97.0	5	1/2	120-60-1	20	10.9	40	164

Note: For vent length and clearances to combustibles, please reference installation instructions.

FILTER REQUIREMENT DATA

Airflow Descriptor	Disposable Filters	Cleanable Filters
	Minimum Area (sq. in.)	Minimum Area (sq.in.)
12	576	288
16	768	384
20	960	480

1. The Airflow Descriptor is the two digits following the "B", "C", or "D" in the model number; e.g. "20" is the Airflow Descriptor.
2. Areas shown for permanent filters are based on filters rated at 600 feet per minute face velocity.

BLOWER DATA: UPFLOW / HORIZONTAL

A97UH2E030B08SK PERFORMANCE (Less Filter)												
External Static Pressure in. w.c.	Rise Range °F		Air Volume / Watts at Various Blower Speeds									
	1st Stage	2nd Stage	High		Medium-High		Medium		Medium-Low		Low	
			cfm	Watts	cfm	Watts	cfm	Watts	cfm	Watts	cfm	Watts
0.10	15-45	30-60	1037	156	964	130	863	101	755	77	742	73
0.20			1001	164	927	137	824	111	689	82	535	55
0.30			968	177	891	147	776	117	634	88	470	59
0.40			937	185	849	157	743	125	596	98	410	66
0.50			896	196	806	167	703	134	544	104	344	72
0.60			865	207	768	173	665	145	502	109	305	79
0.70			835	213	736	184	619	151	459	117	255	84
0.80			787	224	689	193	575	159	412	123	230	88
0.90			743	231	659	199	533	166	365	130	n/a	n/a
1.00			664	221	617	207	500	173	n/a	n/a	n/a	n/a

A97UH2E045B12SK PERFORMANCE (Less Filter)												
External Static Pressure in. w.c.	Rise Range °F		Air Volume / Watts at Various Blower Speeds									
	1st Stage	2nd Stage	High		Medium-High		Medium		Medium-Low		Low	
			cfm	Watts	cfm	Watts	cfm	Watts	cfm	Watts	cfm	Watts
0.10	20-50	30-60	1395	348	1246	249	1139	198	911	111	847	96
0.20			1375	358	1206	258	1105	203	876	120	809	103
0.30			1348	367	1184	267	1079	215	839	122	768	109
0.40			1318	380	1160	278	1046	221	798	132	733	115
0.50			1294	386	1125	286	1014	230	755	139	694	124
0.60			1265	398	1097	296	987	239	710	145	652	132
0.70			1216	393	1066	304	957	247	665	156	606	136
0.80			1147	374	1043	314	923	256	624	160	569	145
0.90			1062	350	1010	320	889	267	589	166	532	151
1.00			941	314	917	301	846	271	556	177	486	156

A97UH2E070B12SK PERFORMANCE (Less Filter)												
External Static Pressure in. w.c.	Rise Range °F		Air Volume / Watts at Various Blower Speeds									
	1st Stage	2nd Stage	High		Medium-High		Medium		Medium-Low		Low	
			cfm	Watts	cfm	Watts	cfm	Watts	cfm	Watts	cfm	Watts
0.10	25-55	35-65	1395	333	1242	240	1137	190	912	107	851	94
0.20			1367	346	1214	252	1104	202	872	116	813	103
0.30			1332	362	1182	260	1071	213	832	123	762	110
0.40			1311	372	1153	274	1043	218	775	134	721	117
0.50			1287	382	1119	285	1001	231	735	141	675	125
0.60			1249	394	1087	294	968	241	681	148	625	134
0.70			1199	387	1055	306	934	249	641	156	581	142
0.80			1112	369	1013	316	891	259	596	166	540	149
0.90			1009	337	946	309	856	268	554	172	483	157
1.00			840	294	833	282	793	269	516	182	443	165

BLOWER DATA: UPFLOW / HORIZONTAL

A97UH2E090C16SK PERFORMANCE (Less Filter)												
External Static Pressure in. w.c.	Rise Range °F		Air Volume / Watts at Various Blower Speeds									
	1st Stage	2nd Stage	High		Medium-High		Medium		Medium-Low		Low	
			cfm	Watts	cfm	Watts	cfm	Watts	cfm	Watts	cfm	Watts
0.10	30-60	40-70	1714	401	1490	284	1373	217	1286	186	1165	143
0.20			1679	419	1476	292	1332	233	1250	199	1131	155
0.30			1650	435	1440	312	1305	247	1219	214	1083	168
0.40			1630	456	1403	327	1271	258	1178	222	1050	176
0.50			1601	469	1377	334	1227	270	1142	232	1006	188
0.60			1567	478	1347	346	1196	283	1110	245	968	197
0.70			1489	461	1313	361	1165	291	1068	257	930	207
0.80			1390	433	1275	372	1126	306	1035	268	894	217
0.90			1237	387	1218	373	1091	315	990	277	843	228
1.00			1115	354	1075	337	1043	324	951	287	807	235

A97UH2E110C20SK PERFORMANCE (Less Filter)																						
External Static Pressure in. w.g.	Rise Range °F		Air Volume / Watts at Different Blower Speeds																			
			Bottom Return Air, Side Return Air with Optional Return Air Base, Return Air from Both Sides or Return Air from Bottom and One Side.										**Single Side Return Air** – Air volumes in **bold** require field fabricated transition to accommodate 20 x 25 x 1 in. air filter in order to maintain proper air velocity.									
	1st Stage	2nd Stage	High		Med-High		Medium		Med-Low		Low		High		Med-High		Medium		Med-Low		Low	
			cfm	Watts	cfm	Watts	cfm	Watts	cfm	Watts	cfm	Watts	cfm	Watts	cfm	Watts	cfm	Watts	cfm	Watts	cfm	Watts
0.10	30-60	40-70	2140	653	1877	449	1706	349	1616	292	1419	215	**2101**	**650**	**1821**	**449**	1650	346	1558	288	1383	209
0.20			2102	669	1840	461	1670	362	1566	304	1388	223	**2069**	**664**	1795	462	1621	357	1503	301	1331	217
0.30			2061	687	1799	477	1639	375	1518	317	1326	234	**2036**	**681**	1746	479	1575	373	1466	312	1289	229
0.40			2031	702	1758	492	1590	387	1480	328	1275	244	**1998**	**698**	1708	492	1538	383	1417	326	1235	241
0.50			1999	719	1721	507	1546	399	1427	341	1229	255	**1970**	**717**	1676	509	1497	397	1377	340	1183	254
0.60			1960	735	1683	519	1505	413	1390	351	1179	266	**1940**	**731**	1641	517	1460	408	1339	349	1152	262
0.70			1908	741	1637	534	1467	424	1351	361	1128	277	**1890**	**740**	1609	533	1417	423	1293	362	1099	274
0.80			1840	721	1609	550	1423	438	1299	374	1088	284	**1834**	**730**	1560	549	1375	437	1254	374	1047	286
0.90			1744	692	1569	561	1387	447	1257	386	1036	296	1741	702	1532	561	1339	447	1219	384	1011	296
1.00			1651	655	1539	573	1347	461	1218	397	984	305	1645	665	1496	574	1298	460	1177	397	970	304

BLOWER DATA: DOWNFLOW

A97DF2E045B12SK PERFORMANCE (Less Filter)												
External Static Pressure in. w.c.	Rise Range °F		Air Volume / Watts at Various Blower Speeds									
	1st Stage	2nd Stage	High		Medium-High		Medium		Medium-Low		Low	
			cfm	Watts	cfm	Watts	cfm	Watts	cfm	Watts	cfm	Watts
0.10	15-45	30-60	1434	383	1275	277	1169	217	921	126	860	106
0.20			1401	395	1237	288	1140	227	879	134	817	115
0.30			1363	398	1211	297	1101	238	833	140	773	122
0.40			1300	383	1179	308	1070	243	798	151	733	131
0.50			1228	367	1151	316	1036	256	755	156	692	136
0.60			1146	343	1105	319	1005	263	710	163	645	144
0.70			1058	318	1038	309	971	272	672	170	598	154
0.80			930	286	942	284	909	272	614	179	557	158
0.90			807	251	811	251	799	251	569	184	518	163
1.00			645	222	669	224	630	216	532	189	473	169

A97DF2E070B16SK PERFORMANCE (Less Filter)												
External Static Pressure in. w.c.	Rise Range °F		Air Volume / Watts at Various Blower Speeds									
	1st Stage	2nd Stage	High		Medium-High		Medium		Medium-Low		Low	
			cfm	Watts	cfm	Watts	cfm	Watts	cfm	Watts	cfm	Watts
0.10	20-50	30-60	1709	485	1510	339	1336	240	1226	196	991	114
0.20			1675	501	1474	350	1294	249	1180	204	927	122
0.30			1638	513	1437	362	1244	261	1127	215	863	130
0.40			1601	529	1386	376	1187	270	1082	226	797	139
0.50			1563	541	1353	388	1139	282	1033	232	727	147
0.60			1511	539	1310	401	1100	293	979	245	661	155
0.70			1445	525	1272	410	1048	304	940	255	604	159
0.80			1339	499	1234	421	1013	313	862	264	531	174
0.90			1243	470	1161	424	952	326	811	272	481	182
1.00			1119	439	1092	414	907	330	763	281	435	192

A97DF2E090C16SK PERFORMANCE (Less Filter)												
External Static Pressure in. w.c.	Rise Range °F		Air Volume / Watts at Various Blower Speeds									
	1st Stage	2nd Stage	High		Medium-High		Medium		Medium-Low		Low	
			cfm	Watts	cfm	Watts	cfm	Watts	cfm	Watts	cfm	Watts
0.10	25-55	35-65	1750	446	1520	308	1389	240	1306	206	1179	158
0.20			1708	463	1487	323	1359	254	1265	217	1130	171
0.30			1685	477	1456	339	1326	264	1228	230	1090	182
0.40			1630	478	1421	350	1274	281	1192	239	1046	192
0.50			1558	462	1394	363	1246	291	1157	251	989	202
0.60			1458	432	1354	373	1209	300	1114	264	952	210
0.70			1371	408	1312	381	1177	314	1079	271	913	220
0.80			1231	368	1234	366	1138	324	1038	282	861	230
0.90			1118	343	1093	336	1093	327	997	291	843	237
1.00			1008	315	976	309	987	306	952	292	794	242

BLOWER DATA: DOWNFLOW

A97DF2E110C20SK PERFORMANCE (Less Filter)												
External Static Pressure in. w.c.	Rise Range °F		Air Volume / Watts at Various Blower Speeds									
	1st Stage	2nd Stage	High		Medium-High		Medium		Medium-Low		Low	
			cfm	Watts	cfm	Watts	cfm	Watts	cfm	Watts	cfm	Watts
0.10	30-60	40-70	2174	694	1920	474	1754	365	1631	312	1441	225
0.20			2136	706	1877	488	1709	379	1583	322	1387	237
0.30			2095	718	1832	500	1658	391	1530	332	1323	247
0.40			2058	734	1792	512	1617	403	1487	345	1276	256
0.50			2006	742	1745	525	1570	413	1433	354	1223	265
0.60			1940	727	1704	538	1523	426	1379	368	1168	276
0.70			1863	702	1665	550	1479	436	1340	377	1110	290
0.80			1765	669	1622	563	1439	445	1288	388	1061	293
0.90			1673	642	1582	572	1398	454	1254	397	1013	304
1.00			1559	599	1522	568	1354	466	1214	407	949	311

DIMENSIONS (IN.)

	Model	A	B	C	D
UPFLOW /HORIZONTAL	A97UH2E030B08SK	17-1/2	16-3/8	16	7-5/8
	A97UH2E045B12SK	17-1/2	16-3/8	16	7-5/8
	A97UH2E070B12SK	17-1/2	16-3/8	16	7-5/8
	A97UH2E090C16SK	21	19-7/8	19-1/2	9-3/8
	A97UH2E110C20SK	21	19-7/8	19-1/2	9-3/8
DOWNFLOW	A97DF2E045B12SK	17-1/2	16-3/8	16	15-1/2
	A97DF2E070B16SK	17-1/2	16-3/8	16	15-1/2
	A97DF2E090C16SK	21	19-7/8	19-1/2	19
	A97DF2E110C20SK	21	19-7/8	19-1/2	19

FRONT VIEW

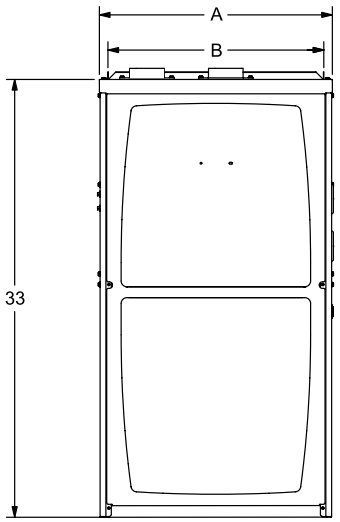

UPFLOW / HORIZONTAL

TOP VIEW

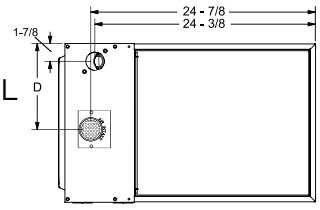

RIGHT SIDE VIEW

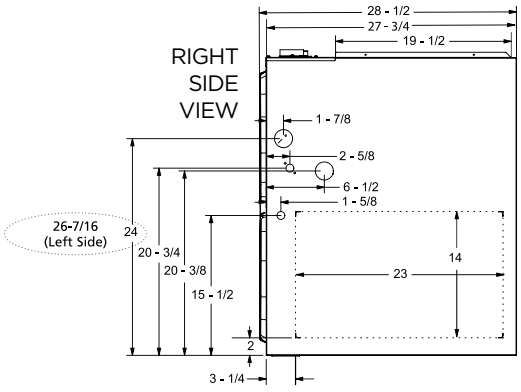

BOTTOM VIEW

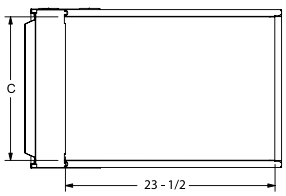

TOP VIEW

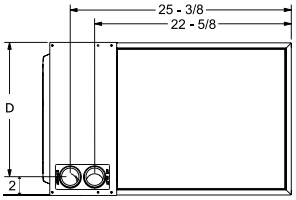

DOWNFLOW

RIGHT SIDE VIEW

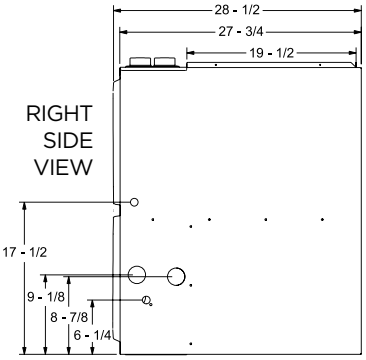

BOTTOM VIEW

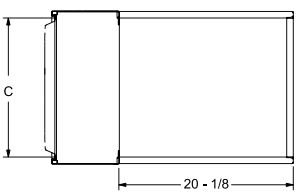

ACCESSORY LIST

Description	Catalog Number
Return Air Base	
Return Air Base 17.5 Inch	68W62
Return Air Base 21.0 Inch	68W63
Return Air Base 24.5 Inch	68W64
Downflow Combustible Flooring Base	
17.5″ B Width	11M60
21.0″ C Width	11M61
External Filter Rack kits	
1 pack (16 x 25)	1.841018
10 pack (16 x 25)	1.841039
Downflow Specific Air Filters	
17.5″	51W07
21.0″	51W08
24.5″	51W09
Horizontal Suspension Kit	
80% & 90% Kit	51W10
Concentric Vent Kit (90% Furnaces only) US Only	
1-1/2″ Vent Version	71M80
2″ Vent Version	69M29
3″ Vent Version	60L46
Concentric Vent Kit (90% Furnaces only) Canada Only	
1-1/2″ and 2″ Vent Version	44W92
3″ Vent Version	44W93
Flush Mount Termination (90% Furnaces only)	
2″ & 3.0″ Vent - US Version	51W11
2″ & 3.0″ Vent - ULC S636 Compliant (Canada)	51W12
High Altitude Orifice Kits (7500′+)	
2-Stage 97% UH/DF - Natural Gas	51W01
2-Stage 97% UH [030] - Natural Gas	14C92
2-Stage 97% UH/DF - Propane Gas	78W97
2-Stage 97% UH [030] - Propane Gas	14C93

For vent length and clearances to combustibles, please reference installation instructions.

ACCESSORY LIST

Description	Catalog Number
High Altitude Pressure Swiches	
2-Stage 97% UH (4,501 - 7,500 ft) [030]	14A47
2-Stage 97% UH/DF (4,501 - 7,500 ft) [045]	32C80
2-Stage 97% UH/DF (4,501 - 7,500 ft) [070]	32C78
2-Stage 97% UH/DF (4,501 - 7,500 ft) [090]	14A54
2-Stage 97% UH/DF (4,501 - 7,500 ft) [110]	32L29
2-Stage 97% UH (7,501 - 10,000 ft) [030]	14A50
2-Stage 97% UH/DF (7,501 - 10,000 ft) [045]	32C81
2-Stage 97% UH/DF (7,501 - 10,000 ft) [070]	14A54
2-Stage 97% UH/DF (7,501 - 10,000 ft) [090]	32C81
2-Stage 97% UH/DF (7,501 - 10,000 ft) [110]	32L30
Natural to LP Kits	
2-Stage 90	11K48
2-Stage 90 High Altitude (>7500')	11K47
Low Input (30K Btuh)	17H64
LP to Natural Kits	
2-Stage - 90 (45K-110K Btuh)	77W10
Transformer (75VA)	
Recommended when furnace is used with zoning or defrost thermostats and other 24V accessories requiring a higher VA rating	27J32
Circuit breaker (furnished) is wired in series	
Replaces the standard 40VA transformer	
Gas Entry Kit	
90% Right hand Gas entry Kit	27U29

For vent length and clearances to combustibles, please reference installation instructions.

REFRIGERANT DETECTION SYSTEM (RDS) COMPONENTS

Description	Order No.
Refrigerant Detection System (RDS) Coil Sensor Kit	27V53

ALLIED™ Air Enterprises

1-800-448-5872

All specifications and illustrations subject to change without notice and without incurring obligations.

FORM NO. A972EK-100 (11/2026)
© 2026 Allied Air Enterprises LLC, a Lennox International Inc. Company
Printed in the U.S.A.