A931EK
PRODUCT SPECIFICATIONS

SINGLE STAGE HIGH EFFICIENCY CONSTANT TORQUE
GAS FURNACE

FORM NO. A931EK-100 (11/2026)



CONTROLS
- Single stage gas valve
- Durable silicon nitride ignitor
- Self diagnostics save last 10 fault codes regardless of power interruption
- Electronic air cleaner and humidifier terminals

VENTING
- Certified for direct vent and indirect vent (1 and 2 pipe applications)

INSTALLATION FEATURES
- Left or right utility connections
- Removable floor base (upflow / horizontal units) for bottom return air
- Zero step horizontal conversion

WARRANTY
10 year limited parts warranty / lifetime heat exchanger warranty available. See limited warranty document for details.

California Only
This product is not certified to be sold or installed in the South Coast Air Quality Management District (SCAQMD). It does not meet the SCAQMD Rule 1111 NOx emission limit of 14 Ng/J.
This product is not certified to be sold or installed in the San Joaquin Valley Air Pollution Control District (SJVAPCD). It does not meet the SJVAPCD Rule 4905 NOx emission limit of 14 Ng/J.

CONFIGURATIONS
- Upflow / Horizontal
- Downflow

HEAT EXCHANGER DESIGN
- Aluminized steel primary heat exchanger with crimped no weld clamshell design
- AL 29-4C Stainless steel secondary heat exchanger

BURNER
- 11k BTUH burners and sealed burner box provide soft ignition and quiet operation

CABINET DESIGN
- Compact 33” height
- Standardized widths for easy coil fit

AIR DELIVERY SYSTEM
- Multi-speed high efficiency (constant torque) blower motor
- Easily removable slide out blower design

AHRI CERTIFIED www.ahridirectory.org
AHRI CERTIFIED www.ahridirectory.org
PFAS

MODEL NUMBER GUIDE

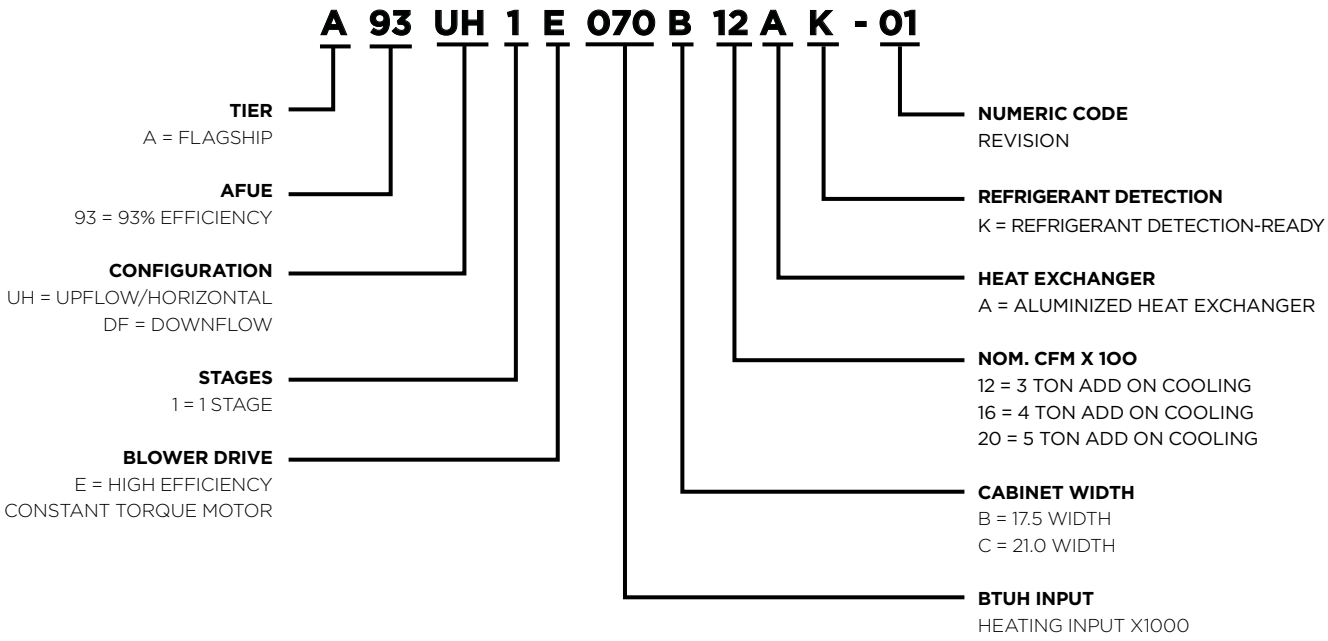

PHYSICAL AND ELECTRICAL DATA

	Model	Input (Btuh)	Output (Btuh)	AFUE (ICS)	Nominal Cooling Capacity	Gas Inlet (in.)	Volts/Hz/ Phase	Max Time Delay Breaker or Fuse	Nominal F.L.A.	Trans. (V.A.)	Approx. Shipping Weight (lbs.)
Upflow	A93UH1E030B12AK	30000	29000	93.0%	1.5 - 3	1/2	120 - 60 - 1	15	6.8	40	129
	A93UH1E045B12AK	44000	42000	93.0%	1.5 - 3	1/2	120 - 60 - 1	15	6.8	40	129
	A93UH1E070B12AK	66000	63000	93.0%	1.5 - 3	1/2	120 - 60 - 1	15	6.8	40	133
	A93UH1E090C12AK	88000	84000	93.0%	1.5 - 3	1/2	120 - 60 - 1	15	6.8	40	147
	A93UH1E090C16AK	88000	84000	93.0%	2.5 - 4	1/2	120 - 60 - 1	15	8.4	40	151
	A93UH1E110C16AK	110000	104000	93.0%	2.5 - 4	1/2	120 - 60 - 1	15	8.4	40	163
	A93UH1E110C20AK	110000	105000	93.0%	3 - 5	1/2	120 - 60 - 1	15	10.9	40	169
Downflow	A93DF1E045B12AK	44000	43000	93.0%	1.5 - 3	1/2	120 - 60 - 1	15	6.8	40	131
	A93DF1E070B12AK	66000	63000	93.0%	1.5 - 3	1/2	120 - 60 - 1	15	6.8	40	135
	A93DF1E090C16AK	88000	84000	93.0%	2.5 - 4	1/2	120 - 60 - 1	15	8.4	40	153

Note: For vent length and clearances to combustibles, please reference installation instructions.

BLOWER PERFORMANCE DATA

	Model	Motor Size (hp)	Blower Size	Temp. Rise (°F)	Blower speed	Heating cfm @ .10" - .80" w.c.									
						0.10	0.20	0.30	0.40	0.50	0.60	0.70	0.80	0.90	1.00
Upflow/Horizontal	A93UH1E030B12AK	1/2	10 x 8	25 - 55	High	1403	1386	1361	1343	1308	1299	1265	1238	1192	1167
					Med/High	1145	1122	1094	1060	1028	1004	975	943	915	877
					Med	972	947	916	887	864	793	786	741	706	653
					Med/Low	770	736	699	656	625	533	515	486	417	363
					Low	619	587	511	475	431	375	0	0	0	0
	A93UH1E045B12AK	1/2	10 x 8	25 - 55	High	1375	1347	1321	1294	1267	1241	1212	1185	1159	1132
					Med/High	1259	1227	1199	1171	1143	1114	1085	1056	1027	996
					Med	1115	1082	1048	1017	984	952	918	886	852	814
					Med/Low	889	850	811	773	731	689	646	604	562	520
					Low	732	689	641	592	544	496	445	386	345	309
	A93UH1E070B12AK	1/2	10 x 8	40 - 70	High	1392	1367	1340	1313	1286	1259	1231	1202	1157	1147
					Med/High	1273	1245	1216	1188	1159	1129	1102	1073	1043	1012
					Med	1131	1101	1068	1035	1001	970	936	902	866	831
					Med/Low	905	867	828	788	747	705	665	626	588	549
					Low	748	704	659	607	559	514	468	422	372	322
	A93UH1E090C12AK	1/2	10 x 8	50 - 80	High	1442	1413	1382	1356	1327	1301	1273	1240	1213	1184
					Med/High	1320	1289	1259	1231	1200	1170	1139	1108	1076	1044
					Med	1172	1138	1105	1072	1037	1002	967	931	891	851
					Med/Low	939	898	859	817	774	729	682	638	596	556
					Low	776	729	682	629	576	524	477	428	375	338
	A93UH1E090C16AK	3/4	10 x 10	45 - 75	High	1686	1651	1615	1583	1550	1515	1479	1446	1407	1368
					Med/High	1477	1438	1399	1362	1324	1283	1240	1195	1150	1111
					Med	1356	1315	1273	1236	1194	1151	1103	1057	1012	977
					Med/Low	1275	1233	1189	1147	1101	1049	1000	957	916	881
					Low	1150	1103	1059	1009	958	903	857	816	773	726
	A93UH1E110C16AK	3/4	10 x 10	50 - 80	High	1726	1696	1666	1634	1607	1569	1539	1507	1484	1445
					Med/High	1510	1476	1450	1375	1369	1336	1301	1262	1225	1190
					Med	1387	1356	1319	1282	1238	1202	1158	1112	1081	1031
					Med/Low	1303	1268	1231	1191	1154	1101	1066	1014	968	936
					Low	1180	1140	1102	1055	1009	963	903	860	816	775
	A93UH1E110C20AK	1	11 1/2 x 10	45 - 75	High	2082	2051	2018	1987	1953	1920	1887	1855	1824	1792
					Med/High	1854	1818	1778	1742	1707	1671	1639	1606	1575	1541
					Med	1679	1640	1602	1570	1532	1498	1463	1427	1390	1351
					Med/Low	1577	1537	1498	1458	1419	1380	1342	1305	1265	1224
					Low	1400	1356	1316	1273	1228	1185	1142	1095	1040	989

BLOWER PERFORMANCE DATA

	Model	Motor Size (hp)	Blower Size	Temp. Rise (°F)	Blower speed	Heating cfm @ .10" - .80" w.c.									
						0.10	0.20	0.30	0.40	0.50	0.60	0.70	0.80	0.90	1.00
Downflow	A93DF1E045B12AK	1/2	10 x 8	25 - 55	High	1376	1349	1324	1295	1272	1253	1226	1202	1177	1146
					Med/High	1247	1223	1199	1172	1143	1121	1096	1074	1041	1014
					Med	1101	1074	1048	1018	992	961	932	898	876	833
					Med/Low	918	890	854	824	786	764	704	688	659	634
					Low	744	712	672	631	596	528	517	466	436	392
	A93DF1E070B12AK	1/2	10 x 8	40 - 70	High	1413	1384	1365	1340	1318	1291	1274	1243	1226	1199
					Med/High	1283	1264	1241	1212	1185	1166	1143	1099	1077	1056
					Med	1132	1109	1078	1051	1024	995	963	925	909	874
					Med/Low	908	882	852	802	771	732	716	650	635	578
					Low	756	708	676	648	574	524	479	452	407	299
	A93DF1E090C16AK	3/4	10 x 10	45 - 75	High	1701	1673	1640	1611	1586	1542	1519	1485	1468	1417
					Med/High	1477	1444	1430	1370	1351	1313	1289	1255	1225	1184
					Med	1364	1335	1299	1266	1230	1185	1156	1122	1071	1075
					Med/Low	1289	1255	1215	1178	1147	1088	1057	1007	964	924
					Low	1158	1123	1085	1035	1003	957	908	878	788	784

DIMENSIONS (IN.)

	Model	A	B	C	D
UPFLOW/HORIZONTAL	A93UH1E030B12AK	17-1/2	16-3/8	16	9-5/16
	A93UH1E045B12AK	17-1/2	16-3/8	16	9-5/16
	A93UH1E070B12AK	17-1/2	16-3/8	16	9-5/16
	A93UH1E090C12AK	21	19-7/8	19-1/2	11-5/16
	A93UH1E090C16AK	21	19-7/8	19-1/2	11-5/16
	A93UH1E110C16AK	21	19-7/8	19-1/2	11-5/16
	A93UH1E110C20AK	21	19-7/8	19-1/2	11-5/16
DOWNFLOW	A93DF1E045B12AK	17-1/2	16-3/8	16	15-1/2
	A93DF1E070B12AK	17-1/2	16-3/8	16	15-1/2
	A93DF1E090C16AK	21	19-7/8	19-1/2	19

Front View

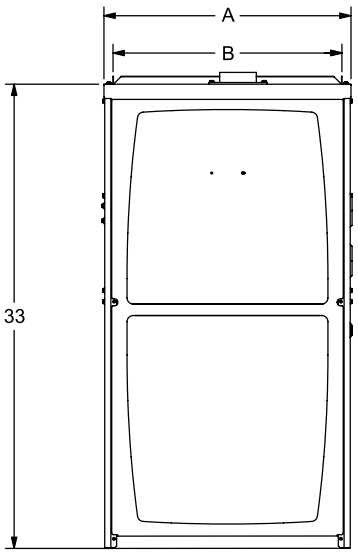

Upflow / Horizontal

Top View

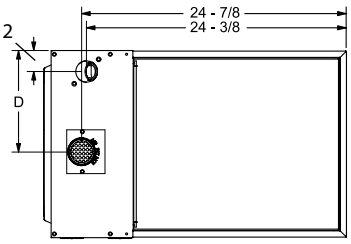

Right Side View

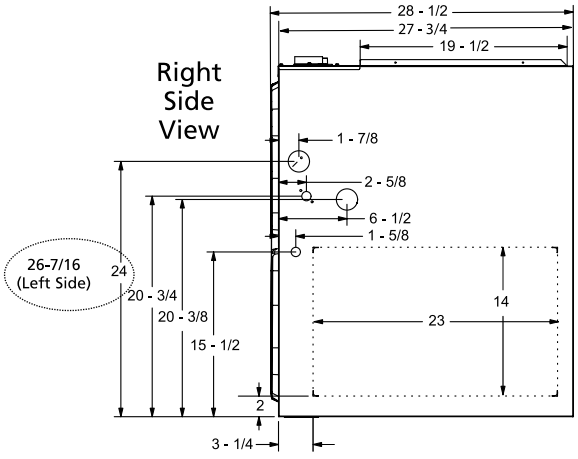

Bottom View

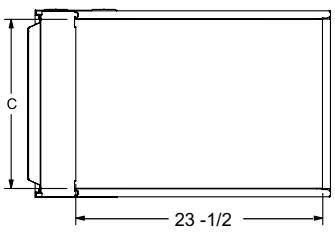

Downflow

Top View

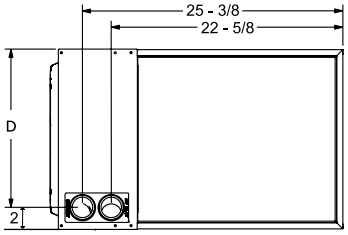

Right Side View

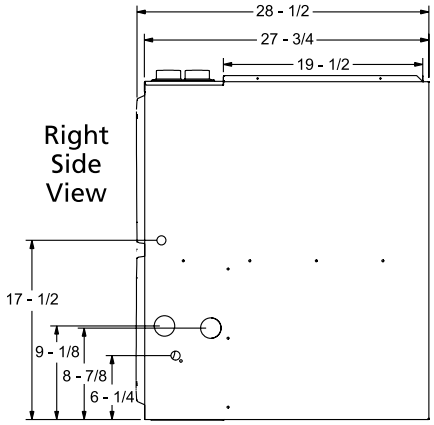

Bottom View

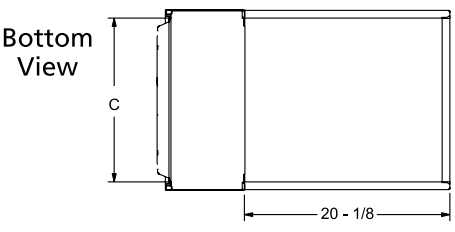

ACCESSORY LIST

CATALOG NUMBER	DESCRIPTION
External Filter Rack kits	
1.841018	1 pack (16 x 25)
1.841039	10 pack (16 x 25)
Natural to LP kits	
11K50	1-Stage - 90%
11K45	High Altitude (>7500')
17H62	1-Stage - 90% - for 030 Capacity ONLY
17H90	High Altitude (>7500') - 030 Capacity Only
Return Air Base	
68W62	17.5" B Width
68W63	21.0" C Width
Downflow Combustible Flooring Base	
11M60	17.5" B Width
11M61	21.0" C Width
Horizontal Suspension Kit	
51W10	80% & 90% Kit
Flush Mount Termination (90% Furnaces only) US Only	
51W11	2" & 3" Vent Version
Concentric Vent Kit (90% Furnaces only) US Only	
71M80	1-1/2" Vent Version
69M29	2" Vent Version
60L46	3" Vent Version
2-Stage Compressor Kit	
85W66	Blower Relay Kit
Transformer (75VA)	
27J32	Recommended when furnace is used with zoning or defrost thermostats and other 24V accessories requiring a higher VA rating
	Circuit breaker (furnished) is wired in series
	Replaces the standard 40VA transformer
Gas Entry Kit	
27U29	90% Right hand Gas entry Kit

Note: For vent length and clearances to combustibles, please reference installation instructions.

ALLIED™ Air Enterprises

1-800-448-5872

All specifications and illustrations subject to change without notice and without incurring obligations.

FORM NO. A931EK-100 (11/2026)

© 2026 Allied Air Enterprises LLC, a Lennox International Inc. Company

Printed in the U.S.A.