INSTALLATION INSTRUCTIONS

7ECX

R-454B INDOOR VERTICAL UPFLOW COILS

This manual must be left with the homeowner for future reference

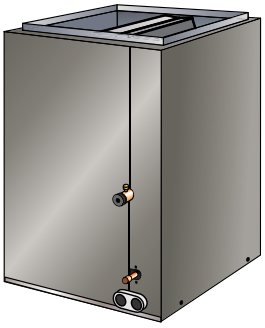

⚠ IMPORTANT

If downflow application is required, separately order kit number 32F20 (A/B Cabinets) or 32F22 (C Cabinets) and install per kit's instructions. Also use metal or class I supply and return air plenums.

⚠ IMPORTANT

Refrigerant Detection System Control (27A05) must be ordered For non-communicating furnaces, order kit 27A05. RDS system requires 3 VA additional loading on low voltage transformer.

⚠ WARNING

Improper installation, adjustment, alteration, service or maintenance can cause property damage, personal injury or loss of life. Installation and service must be performed by a licensed professional HVAC installer or equivalent, service agency, or the gas supplier.

⚠ IMPORTANT

The Clean Air Act of 1990 bans the intentional venting of refrigerant (CFCs, HCFCs and HFCs) as of July 1, 1992. Approved methods of recovery, recycling or reclaiming must be followed. Fines and/or incarceration may be levied for noncompliance.

⚠ CAUTION

As with any mechanical equipment, contact with sharp sheet metal edges can result in personal injury. Take care while handling this equipment and wear gloves and protective clothing.

⚠ WARNING

Maximum altitude of application is 10,500' feet (3200 m) above sea level.

Allied Air Enterprises LLC
215 Metropolitan Drive
West Columbia, SC 29170

Table of Contents

Releasing Air Charge 3
Installation 3
Refrigerant Line Connections 5
Blower Speed Selection 9
Maintenance 10
Decommissioning 11

General Information

The 7ECX coil includes an externally equalized factory-installed R-454B check/expansion valve and a factory-installed R-454B refrigerant leak detection sensor.

The coil drain pan has a maximum service temperature of 500°F. The drain pan must be at least 2" away from a standard gas-fired furnace heat exchanger and at least 4" away from any drum-type or oil-fired furnace heat exchanger. Closer spacing may damage the drain pan and cause a leak.

Refer to the Product Specification bulletin (EHB) for the proper use of these coils with specific furnaces, air handlers and line sets.

These instructions are intended as a general guide and do not supersede local or national codes in any way. Authorities who have jurisdiction should be consulted before installation.

IMPORTANT: Special procedures are required for cleaning the aluminum coil in this unit. See page 10 in this instruction for information.

Shipping and Packing List

Package 1 of 1 contains:

1 - Evaporator coil
1 - Line set joint sleeve kit
  Liquid line sleeve (1)
  Suction line sleeve (1)
  Band clamps (3)
  Suction line insulation tape (1)

Check the components for shipping damage; if found, immediately contact the last carrier.

NOTE *- This unit* 7ECX *is a PARTIAL UNIT AIR CONDITIONER, complying with PARTIAL UNIT requirements of this Standard, and must only be connected to other units that have been confirmed as complying to corresponding PARTIAL UNIT requirements of this Standard, UL 60335-2-40/CSA C22.2 No. 60335-2-40, or UL 1995/ CSA C22.2 No 236.*

Partial units shall only be connected to an appliance suitable for the same refrigerant.

(P) 508450-02

⚠ WARNING

- Do not use means to accelerate the defrosting process or to clean, other than those recommended by the manufacturer.
- The appliance shall be stored in a room without continuously operating ignition sources (for example: open flames, an operating gas appliance, or an operating electric heater).
- Do not pierce or burn.
- Be aware that refrigerants may not contain an odor.

⚠ CAUTION

Servicing shall be performed only as recommended by the manufacturer.

⚠ WARNING

Ducts connected to an appliance shall not contain a potential ignition source.

⚠ WARNING

If this appliance is conditioning a space with an area smaller than TA_{min}, then that space must be without continuously operating open flames (e.g. an operating gas appliance) or other potential ignition sources (e.g. an operating electric heater or similar hot surface). A flame-producing device may be installed in the same space if the device is provided with an effective flame arrest system.

⚠ WARNING

Auxiliary devices which may be a potential ignition source shall not be installed in the duct work. Examples of such potential ignition sources are hot surfaces with a temperature exceeding 1,292F (700°C) and electric switching devices.

⚠ WARNING

For appliances using A2L refrigerants connected via an air duct system to one or more rooms, only auxiliary devices approved by the appliance manufacturer or declared suitable with the refrigerant shall be installed in connecting ductwork.

⚠ CAUTION

Leak Detection System installed. Unit must be powered except for service.

⚠ WARNING

For duct connected appliances, false ceilings or drop ceilings may be used as a return air plenum if a REFRIGERANT DETECTION SYSTEM is provided in the appliance and any external connections are also provided with a sensor immediately below the return air plenum duct joint.

⚠ WARNING

Every working procedure that affects safety means shall only be carried out by competent persons. This appliance is not to be used by persons (including children) with reduced physical, sensory or mental capabilities, or lack of experience and knowledge, unless they have been given supervision or instruction concerning use of the appliance by a person responsible for their safety. Children should be supervised to ensure they do not play with the appliance.

⚠ CAUTION

Any personnel installing, decommissioning, or performing maintenance on the unit must be properly trained with A2L refrigerants.

NOTE *- R-454b is a A2L refrigerant. The system installation must meet the following parameters based upon total refrigerant charge (line set included). TAmin (Total minimum conditioned area)is the minimum allowable conditioned area based upon the total system charge at sea level. Values must be multiplied by altitude adjustment factor at installed altitude.*

Qmin table refers to minimum airflow requirements during refrigerant leak mitigation by the refrigerant detection system, based upon total system charge.

See tables below.

TAmin Table

Charge (lb)	10.0	15.0	20.0	25.0	30.0
Charge (kg)	4.5	6.8	9.1	11.3	13.6
Minimum Conditioned Area (ft2)	150.9	226.4	301.9	377.4	452.8
Minimum Conditioned Area (m2)	14.0	21.0	28.0	35.1	42.1

NOTE *- Multiply values in TAmin table by the Altitude Adjustment Factors to correct TAmin based on installed altitude.*

Altitude Adjustment Factor

Altitude (m)	0	200	400	600	800	1000	1200	1400	1600
Altitude (ft)	0	660	1310	1970	2620	3280	3940	4590	5250
Adj. Factor	1	1	1	1	1.02	1.05	1.04	1.1	1.12
Altitude (m)	1600	1800	2000	2200	2400	2600	2800	3000	3200
Altitude (ft)	5250	5910	6560	7220	7870	8530	9190	9840	10500
Adj. Factor	1.12	1.15	1.18	1.21	1.25	1.28	1.32	1.36	1.4

Model Number Identification

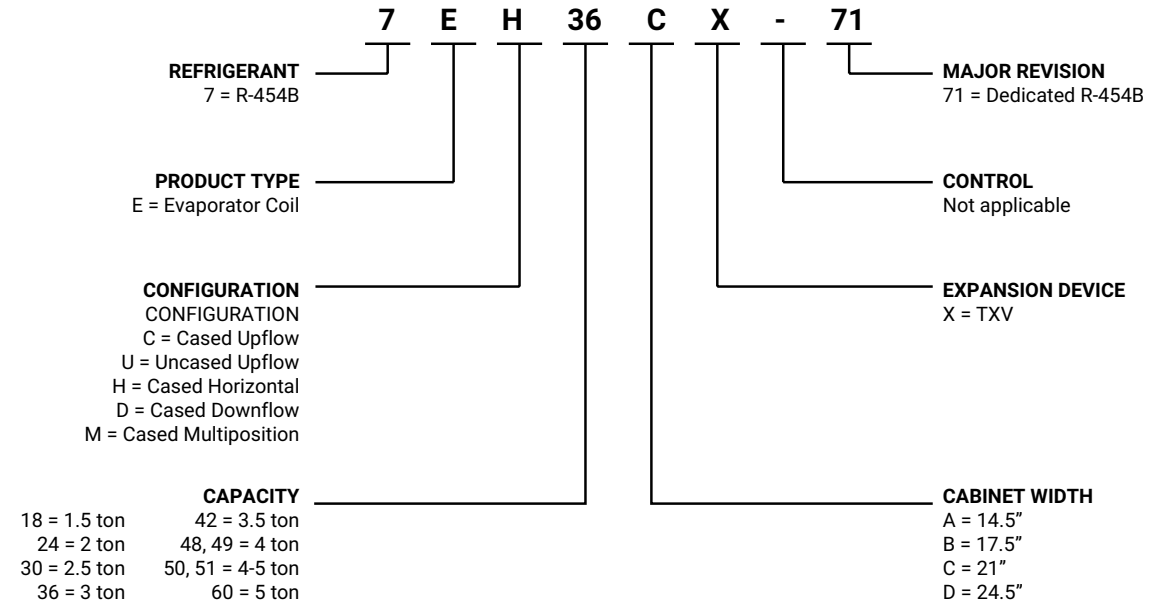

Releasing Air Charge

⚠ CAUTION

The coil is shipped from the factory pressurized with dry air. Pierce a hole in the rubber plug that seals the vapor line to relieve the pressure before removing the plugs.

NOTE - *If there is no pressure released when the vapor line rubber plug is pierced, check the coil for leaks before continuing with the installation.*

The 7ECX coils are shipped with a 10 ± 3 psi dry air holding charge. Puncture the suction line rubber plug to release the charge. Remove the rubber plug. Ensure that the coil is void of pressure.

Installation

⚠ WARNING

Risk of explosion or fire. Can cause injury or death.

Recover all refrigerant to relieve pressure before opening the system.

Every working procedure that affects safety means shall only be carried out by competent persons. This appliance is not to be used by persons (including children) with reduced physical, sensory or mental capabilities, or lack of experience and knowledge, unless they have been given supervision or instruction concerning use of the appliance by a person responsible for their safety. Examples of such working procedures are breaking into the refrigerating circuit, opening of sealed components, and opening of ventilated enclosures.

- Work shall be undertaken under a controlled procedure so as to minimize the risk of a flammable gas or vapor being present while the work is being performed.
- The area shall be checked with an appropriate refrigerant detector prior to and during work, to ensure the technician is aware of potentially toxic or flammable atmospheres. Ensure that the leak detection equipment being used is suitable for use with all applicable refrigerants, i.e. non-sparking, adequately sealed or intrinsically safe.
- If any hot work is to be conducted on the refrigerating equipment or any associated parts, the appropriate fire extinguishing equipment shall be available to hand. Have a dry powder or CO2 fire extinguisher adjacent to the charging area.
- No person carrying out work in relation to a refrigerating system which involves exposing any pipe work shall use any sources of ignition in such a manner that it may lead to the risk of fire or explosion. All possible ignition sources, including cigarette smoking, should be kept sufficiently far away from the site of installation, repairing, removing and disposal, during which refrigerant can possibly be released to the surrounding space. Prior to work taking place, the area around the equipment is to be surveyed to make sure that there are no flammable hazards or ignition risks. “No Smoking” signs shall be displayed.
- Ensure that the area is in the open or that it is adequately ventilated before breaking into the system or conducting any hot work. A degree of ventilation shall continue during the period that the work is carried out.
- Pipe-work including piping material, pipe routing, and installation shall include protection from physical damage in operation and service, and be in compliance with national and local codes and standards.
- All field joints shall be accessible for inspection prior to being covered or enclosed.

- Where electrical components are being changed, they shall be fit for the purpose and to the correct specification. At all times the manufacturer's maintenance and service guidelines shall be followed. If in doubt, consult the manufacturer's technical department for assistance. The following checks shall be applied to installations using FLAMMABLE REFRIGERANTS as applicable:

1. The actual refrigerant charge is in accordance with the room size within which the refrigerant containing parts are installed.
2. The ventilation machinery and outlets are operating adequately and are not obstructed.
3. If an indirect refrigerating circuit is being used, the secondary circuit shall be checked for the presence of refrigerant.
4. Markings on the equipment should be visible and legible. Markings and signs that are illegible shall be corrected.
5. Refrigerating pipe or components are installed in a position where they are unlikely to be exposed to any substance which may corrode refrigerant containing components, unless the components are constructed of materials which are inherently resistant to being corroded or are suitably protected against being so corroded.

- For systems containing refrigerant, all repair and maintenance to electrical components shall include initial safety checks and component inspection procedures such as that capacitors are discharged in a safe manner to avoid possibility of sparking, that no live electrical components and wiring are exposed while charging, recovering, or purging the system, and that there is continuity of earth bonding. If a fault exists that could compromise safety, then no electrical supply shall be connected to the circuit until it is satisfactorily dealt with. If the fault cannot be corrected immediately but it is necessary to continue operation, an adequate temporary solution shall be used that is reported to the owner of the equipment, so all parties are advised.

NOTE *- Sealed electrical components shall be replaced, not repaired*.

NOTE *- Intrinsically safe components must be replaced, not repaired.*

NOTE *- All maintenance staff and others working in the local area shall be instructed on the nature of work being carried out with work in confined spaces being avoided.*

- Under no circumstances shall potential sources of ignition be used in the searching for or detection of refrigerant leaks. A halide torch (or any other detector using a naked flame) shall not be used. The following leak detection methods are deemed acceptable for all refrigerant systems. Electronic leak detectors may be used to detect refrigerant leaks but, in the case of flammable refrigerants, the sensitivity may not be adequate, or may need re-calibration. (Detection equipment shall be calibrated in a refrigerant-free area.) Ensure that the detector is not a potential source of ignition and is suitable for the refrigerant used. Leak detection equipment shall be set at a percentage of the LFL of the refrigerant and shall be calibrated to the refrigerant employed, and the appropriate percentage of gas (25 % maximum) is confirmed. Leak detection fluids are also suitable for use with most refrigerants but the use of detergents containing chlorine shall be avoided as the chlorine may react with the refrigerant and corrode the copper pipe-work. If a leak is suspected, all naked flames shall be removed/extinguished. If a leakage of refrigerant is found which requires brazing, all of the refrigerant shall be recovered from the system, or isolated (by means of shut off valves) in a part of the system remote from the leak.

- When breaking into the refrigerant circuit to make repairs - or for any other purpose - conventional procedures shall be used. However, for flammable refrigerants it is important that best practice be followed and, since flammability is a consideration, procedures such as safely remove refrigerant following local and national regulations, purging the circuit with inert gas, evacuating (optional for A2L), purging with inert gas (optional for A2L), or opening the circuit by cutting or brazing be adhered to. The refrigerant charge shall be recovered into the correct recovery cylinders if venting is not allowed by local and national codes. For appliances containing flammable refrigerants, the system shall be purged with oxygen-free nitrogen to render the appliance safe for flammable refrigerants. This process might need to be repeated several times. Compressed air or oxygen shall not be used for purging refrigerant systems. For appliances containing flammable refrigerants, refrigerants purging shall be achieved by breaking the vacuum in the system with oxygen-free nitrogen and continuing to fill until the working pressure is achieved, then venting to atmosphere, and finally pulling down to a vacuum (optional for A2L). This process shall be repeated until no refrigerant is within the system (optional for A2L). When the final oxygen-free nitrogen charge is used, the system shall be vented down to atmospheric pressure to enable work to take place. Ensure that the outlet for the vacuum pump is not close to any potential ignition sources and that ventilation is available.

Install the furnace or air handler according to the installation instructions provided with the unit.

Position the cased coil on top of the furnace or air handler cabinet and secure it using field-provided screws.

NOTE - *If the coil is to be installed on an oil furnace, it may be necessary to install a field-installed transition between the furnace and the coil to prevent airflow restriction and possible damage to the coil drain pan. See the oil furnace installation instructions for details*.

NOTE -*The coil cabinet has six screw clearance holes which should be aligned with the furnace engagement*

holes. Secure the coil cabinet to the furnace or air handler using six field-provided #8 X 1" screws.

Sensor Connection

All R-454B coils are equipped with a factory-installed refrigerant leak detection. Please follow the steps below to ensure proper sensor communication with the system

1 - Open access panel

2 - Route wire through factory provided wire outlet

3 - Connect sensor 4-pin connector to the RDSC board, or to the furnace board as applicable. Refer to the furnace and RDSC instructions for additional control details.

Refrigerant Line Connections

LINE SIZES

The refrigerant line sets should be sized according to the recommendations given in the air conditioner unit installation instructions. Use table 1 to determine correct braze connection sizes. A field-provided adapter may be required to match line set connections.

TABLE 1. Refrigerant Line Connections - Model 7ECX

Model Number	Suction	Liquid
18 24 30 36	3/4 Inch	3/8 Inch
48 49 50 60	7/8 Inch	

REPLACEMENT PARTS

If replacement parts are necessary, order kit 69J46. The kit includes:

- 10 - Brass nuts for liquid line assemblies
- 20 - Teflon rings
- 10 - Liquid line orifice housings
- 10 - Liquid line assemblies

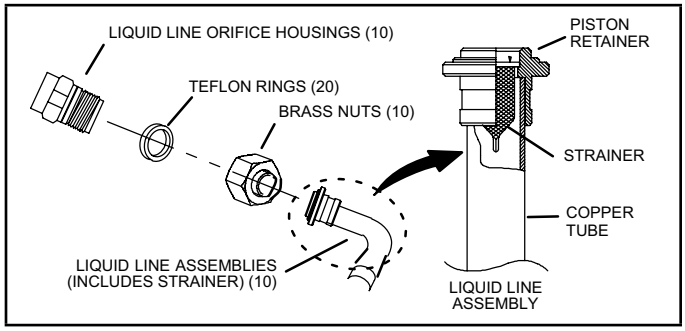

FIGURE 1. 69J46 Kit Components

BRAZING GUIDELINES

⚠ IMPORTANT

Braze-free fittings must conform with UL207 or ISO14903 (latest edition).

Use a silver alloy brazing rod (5 or 6 percent silver alloy for copper-to-copper connections or 45 percent silver alloy for copper-to-brass or copper-to-steel connections).

Before making brazed connections, place a field-provided heat shield, such as a wet rag, against the unit cabinet and around the piping stubs, expansion valve and sensing bulb. The heat shield must be in place to prevent heat damage during brazing. See figure 2.

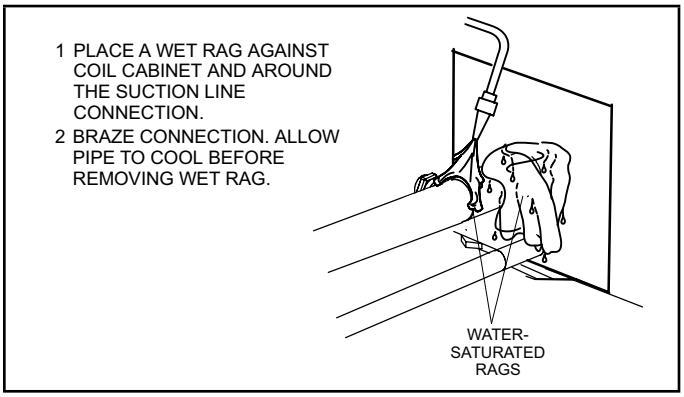

FIGURE 2. Braze Refrigerant Lines

SUCTION LINE CONNECTION

Use the following procedure to connect the suction line to the indoor coil:

1 - Remove rubber plug from the stubbed connection.

2 - Determine the refrigerant suction line size. For suction lines of 7/8" or 1-1/8", trim the smaller end of the larger line set joint sleeve accordingly to accommodate the refrigerant piping (see figure 3).

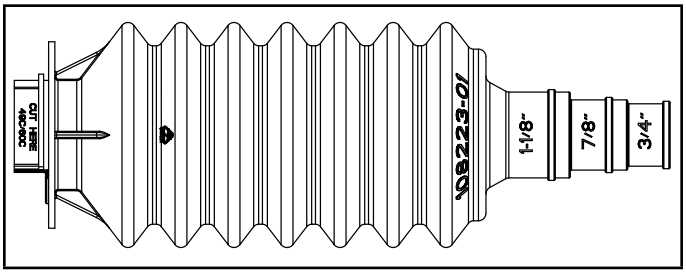

FIGURE 3. Line Set Joint Sleeve

***NOTE** - For sizes 48,49,50 and 60C, cut off marked section on line set joint sleeve (see figure 3)*

3 - Slide the line set joint sleeve onto the refrigerant piping. The sleeve should be at least two feet from the joint to avoid damage during brazing.

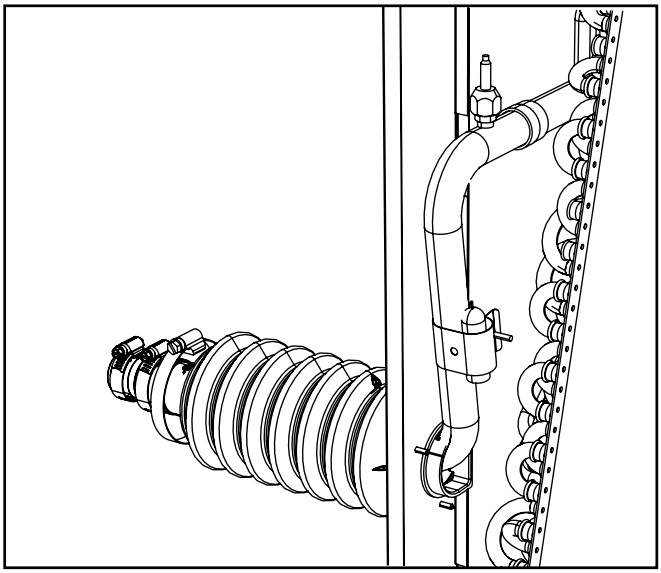

FIGURE 4. 7ECX Suction Line with Line Set Joint Sleeve

NOTE *- All three band clamps are not necessary for final installation.*

4 - For brazed connections:
   a. Position the refrigerant piping and make the brazed connection following the brazing guidelines.
   b. Do not remove the water-saturated rags until the piping has cooled completely.

5 - For braze-free connections:
   a. Position the refrigerant piping and follow the assembly instructions provided with the braze-free connector.

7ECX LIQUID LINE CONNECTION

7ECX coils include a factory-installed R-454B check/ expansion valve metering device.

Connect the properly-sized field-provided liquid line to the liquid line stub as shown in figure 5 using the following procedures:

1 - Slide the smaller line set joint sleeve onto the refrigerant piping. The sleeve should be at least two feet from the joint to avoid damage during brazing.

2 - For brazed connections:
   a. Position the refrigerant piping and make the brazed connection following the brazing guidelines.
   b. Do not remove the water-saturated rags until the piping has cooled completely.

3 - For braze-free connections:
   a. Position the refrigerant piping and follow the assembly instructions provided with the braze-free connector.

NOTE *- When installing refrigerant lines longer than 50 feet, see the Allied Refrigerant Piping Design and Fabrication Guidelines, or contact Allied Technical Support Product Applications for assistance.*

Leak Testing, Evacuating and Charging

Refrigerant system installations shall be installed and tested per ASHRAE Standard 15.2, Section 10.0 (latest edition).

Refer to the outdoor unit instruction for leak testing, evacuating and charging procedures. Always leak check entire system before charging.

⚠ IMPORTANT

In addition to conventional charging procedures, the following requirements shall be followed.

- Ensure that contamination of different refrigerants does not occur when using charging equipment. Hoses or lines shall be as short as possible to minimize the amount of refrigerant contained in them.
- Cylinders shall be kept in an appropriate position according to the instructions.
- Ensure that the REFRIGERATING SYSTEM is earthed prior to charging the system with refrigerant.
- Label the system when charging is complete (if not already).
- Extreme care shall be taken not to overfill the REFRIGERATING SYSTEM.

Prior to recharging the system, it shall be pressure-tested with the appropriate purging gas. The system shall be leak-tested on completion of charging but prior to commissioning. A follow up leak test shall be carried out prior to leaving the site.

- Before carrying out work on systems containing refrigerant, it is essential that the technician is completely familiar with the equipment and all its detail. It is recommended good practice that all refrigerants are recovered safely.
- Prior to the task being carried out, an oil and refrigerant sample shall be taken in case analysis is required prior to re-use of recovered refrigerant. It is essential that electrical power is available before the task is commenced.
- Steps to ensure this are: becoming familiar with the equipment and its operation, isolating the system electrically, ensuring that before attempting the procedure that mechanical handling equipment is available, if required, for handling refrigerant cylinders, and that all personal protective equipment is available and being used correctly while the recovery process is supervised at all times by a competent person and that the recovery equipment and cylinders conform to the appropriate standards. Additionally, pump down refrigerant system, if possible, and if a vacuum is not possible, make a manifold so that refrigerant can be removed from various parts of the system. Make sure that cylinders are situated on the scales before recovery takes place. Start the recovery machine and operate in accordance with instructions. Do not overfill cylinders (no more than 80% volume liquid charge). Do not exceed the maximum working pressure of the cylinder, even temporarily.

When the cylinders have been filled correctly and the process completed, make sure that the cylinders and the equipment are removed from site promptly and all isolation valves on the equipment are closed off.

- Recovered refrigerant shall not be charged into another refrigerating system unless it has been cleaned and checked.
- When removing refrigerant from a system, either for servicing or decommissioning, it is recommended good practice that all refrigerants are removed safely.
- When transferring refrigerant into cylinders, ensure that only appropriate refrigerant recovery cylinders are employed. Ensure that the correct number of cylinders for holding the total system charge is available. All cylinders to be used are designated for the recovered refrigerant and labelled for that refrigerant (i.e. special cylinders for the recovery of refrigerant). Cylinders shall be complete with pressure-relief valve and associated shut-off valves in good working order. Empty recovery cylinders are evacuated and, if possible, cooled before recovery occurs.
- The recovery equipment shall be in good working order with a set of instructions concerning the equipment that is at hand and shall be suitable for the recovery of all appropriate refrigerants including, when applicable, flammable refrigerants. In addition, a set of calibrated weighing scales shall be available and in good working order. Hoses shall be complete with leak-free disconnect couplings and in good condition. Before using the recovery machine, check that it is in satisfactory working order, has been properly maintained and that any associated electrical components are sealed to prevent ignition in the event of a refrigerant release. Consult manufacturer if in doubt.

The recovered refrigerant shall be returned to the refrigerant supplier in the correct recovery cylinder, and the relevant waste transfer note arranged. Do not mix refrigerants in recovery units and especially not in cylinders.

If compressors or compressor oils are to be removed, ensure that they have been evacuated to an acceptable level to make certain that flammable refrigerant does not remain within the lubricant. The evacuation process shall be carried out prior to returning the compressor to the suppliers. Only electric heating to the compressor body shall be employed to accelerate this process. When oil is drained from a system, it shall be carried out safely.

Line Set Joints

Evaporator primary line set joints in all applications shall have a line set joint sleeve.

Evaporator primary line sets should not have additional joints not covered by line set joint sleeve.

If additional joints are present, the system installation shall comply with one of the options below:

Option 1 - Furnace is installed as a direct vent appliance;

Option 2 - Furnace/Evaporator installation is in a space greater than the minimum conditioned area (Amin);

Option 3 - Furnace/Evaporator installation is connected to a space greater than the minimum conditioned area (Amin) through an opening of at least 15 in² (4-inch diameter hole equivalent) located below the level of the furnace burners;

Option 4 - Have a second refrigerant detection sensor installed below the level of the burners (see Secondary Sensor Installation section).

Multiple Systems Installed in Same Space

If multiple systems are installed in the same confined space, and at least one of the systems has A2L refrigerant and an exposed joint (not covered by line set sleeve), then all non-direct vent furnaces in the same space must have a refrigerant detection system with a sensor installed below the level of the burners. If refrigerant sensor is required, it shall be mounted as follows:

Upflow Applications: Mounted on an unused side furnace return air connection at least 9 inches above the floor and within 9 inches from front of furnace.

Secondary Sensor Installation

If secondary refrigerant sensor is required, it shall be mounted as follows:

Upflow Applications: Mounted on an unused side furnace return air connection at least 9 inches above the floor and within 9 inches from front of furnace.

Connect the refrigerant sensor to the second sensor input on the RDS Control. Refer to the instructions provided with the sensor or the RDS controller to enable the second sensor.

Attaching Line Set Joint Sleeve

After system inspection and charging is complete, the line set joint sleeve must be properly positioned and attached to the coil cabinet. Use the following procedure for the suction and liquid lines.

Suction Line

1 - Using the insulation provided, wrap the section of the suction line next to the coil cabinet. Start at the coil piping panel and wrap the suction line with tape for approximately 7 inches. Make sure that insulation fits inside the sleeve.

2 - Carefully slide the sleeve over the insulation and insert into the “D” shaped opening in the coil cabinet. The cabinet sheet metal edges shall fit into the groove in the sleeve. Secure the sleeve to the cabinet with 2 sheet metal screws provided.

3 - Position the band clamp as shown in figure 5 and torque to 25 in-lbs to seal sleeve to line set.

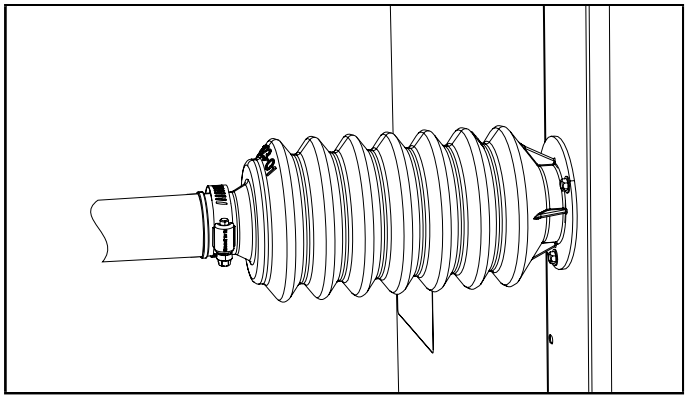

FIGURE 5. Band Clamp Installed on Sleeve

4 - Install a piece of field-supplied Armaflex over the band clamp and the end of the line set joint sleeve to prevent sweating (see figure 6).

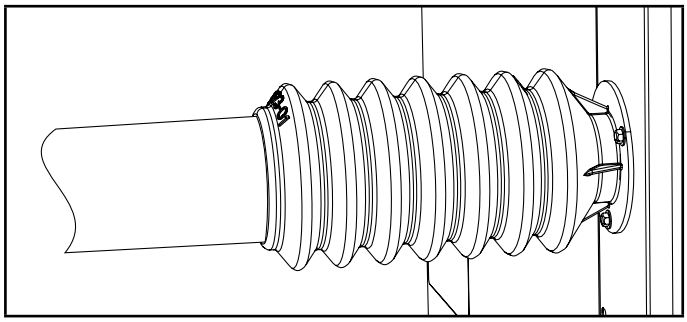

FIGURE 6. Install Armaflex Over End of Sleeve and Clamp

Liquid Line

1 - Slide sleeve over the field joint and insert into the "D" shaped opening in the cabinet. The cabinet sheet metal edges shall fit into the groove in the sleeve. Secure the sleeve to the cabinet with 2 sheet metal screws provided.

2 - Position the band clamp as shown in figures 5 and 7 and torque to 20 in-lbs to seal sleeve to line set.

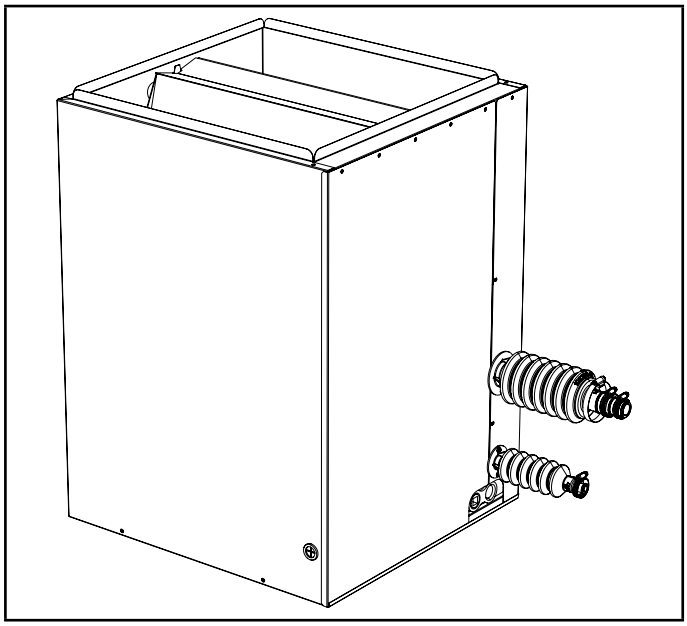

FIGURE 7. 7ECX with Line Set Joint Sleeves

SPECIAL APPLICATIONS

Two or More Furnaces Installed in the Same Confined Space

In the case of a parallel furnace install, each unit should be equipped with its own separate control. Recommendation will be to add a secondary sensor to each of the parallel systems installed in the confined space.

Sealing Ducts

⚠ WARNING

There must be an airtight seal between the bottom of the furnace and the return air plenum. Use fiberglass sealing strips, caulking, or equivalent sealing method between the plenum and the air handler cabinet to ensure a tight seal. Return air must not be drawn from a room where the air handler or any gas-fueled appliance (i.e., water heater), or carbon monoxide-producing device (i.e., wood fireplace) is installed.

The coil cabinet MUST be sealed after installation to ensure against air leaks, which can impact system performance. The material, and method, used should be capable of enduring the range of temperature and humidity levels expected in the specific install location.

Ensure that the duct is secured and all joints are properly sealed to the coil cabinet flanges.

Condensate Drain Connections

⚠ IMPORTANT

After removal of drain pan plug(s), check drain hole(s) to verify that drain opening is fully open and free of any debris. Also check to make sure that no debris has fallen into the drain pan during installation that may plug up the drain opening.

MAIN DRAIN

Connect the main drain and route drain tubing downward to drain line or sump. Do not connect drain to a closed waste system. See figure 8 for typical drain trap configuration.

OVERFLOW DRAIN

It is recommended that the overflow drain stub be connected to an overflow drain line for all units. If the overflow drain is not connected to a drain line, it must be plugged with the provided cap.

CONDENSATE DRAIN RECOMMENDATIONS

The following practices are recommended to ensure better condensate removal:

- Main and overflow drain lines should **NOT** be smaller than both drain connections at drain pan.
- Overflow drain line should run to an area where homeowner will notice drainage.
- It is recommended that the overflow drain line be vented and a trap installed. Refer to local codes.

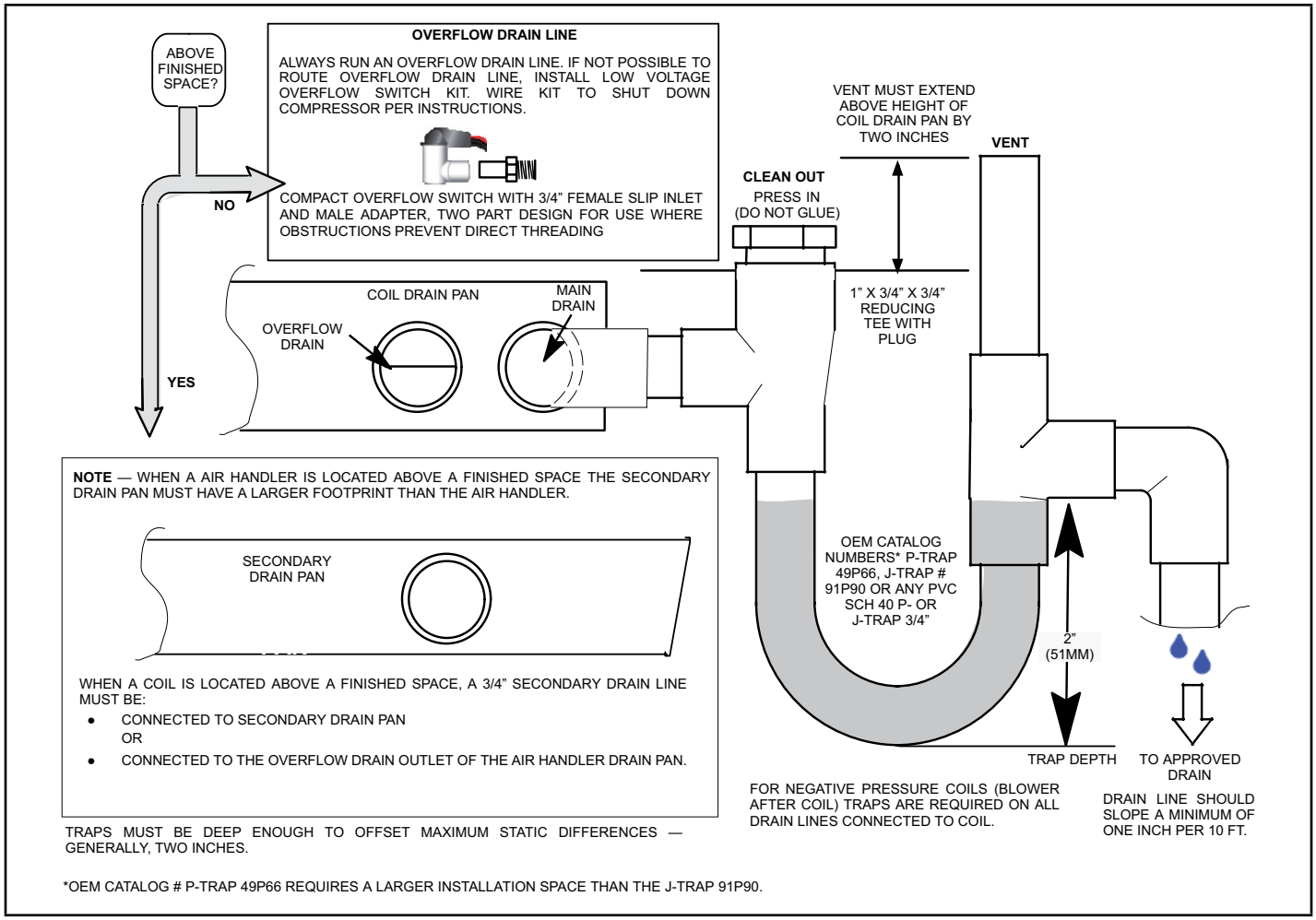

FIGURE 8. Typical Main and Overflow Drain Installations

Blower Speed Selection

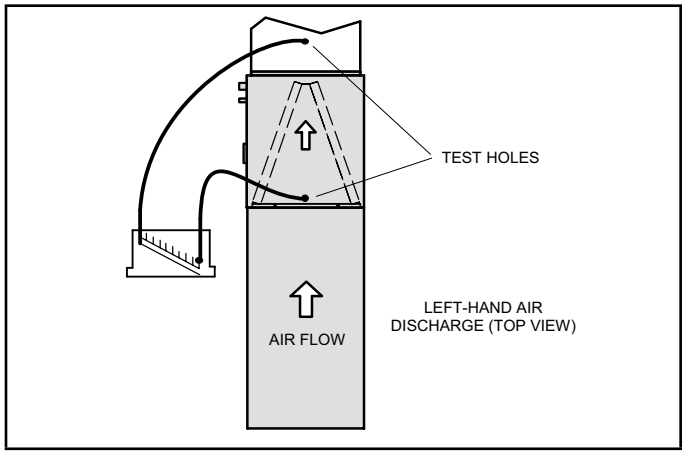

FIGURE 9. Static Pressure Test

⚠ CAUTION

Take care when drilling test holes into the furnace flange and the duct. Drill holes away from refrigerant piping. Test holes should be drilled where specified in order to avoid unit damage.

Proper air volume must be provided over the evaporator coil. Select a blower motor speed tap that will provide 400 ± 50 CFM per 12,000 Btuh of cooling capacity (wet coil). A static pressure reading must be taken to see if the pressure drop falls within the proper range.

To ensure accuracy, air must be read from below the coil and above the coil. See figure 7 for an example to obtain an accurate reading.

1 - Drill one 5/16" air test hole into the delta plate between the coil slabs.

2 - Drill one 5/16" air test hole into the duct above the top of the coil.

3 - Connect the instrument for **static pressure measurement** hoses to the air entering side of coil. Insert the hoses so that 1/4" extends inside the duct or end seal. Seal around holes with Permagum®.

4 - Turn on electrical power to the furnace and set the thermostat to initiate a cooling demand.

5 - Table 2 lists air volumes and equivalent static pressure readings for these units. Observe the static pressure reading. If the reading is below the required air volume, increase the blower speed; if the reading is above the required air volume, decrease the blower speed. Refer to the furnace wiring diagram for blower speed settings.

6 - When the required static pressure readings are obtained, remove the test hose lines and insert snap hole plugs into test holes.

TABLE 2. Air Volume / Static Pressure Drop Across Coil - Model 7ECX

Cabinet		Vol: CFM	Drop: in. w.g.	
Model	Width (in.)		Dry	Wet
18 / 24A	14.5	600	0.11	0.17
	14.5	800	0.18	0.25
18 / 24B	17.5	600	0.11	0.17
	17.5	800	0.18	0.25
24A	14.5	800	0.16	0.18
24B	17.5	800	0.16	0.18
30A	14.5	1000	0.18	0.2
30B	17.5	1000	0.18	0.2
30 / 36A	14.5	1000	0.19	0.21
	14.5	1200	0.27	0.3
30 / 36B	17.5	1200	0.13	0.16
	17.5	1200	0.17	0.21
30 / 36C	21	1000	0.13	0.16
	21	1200	0.17	0.21
36A	14.5	1200	0.27	0.3
36B	17.5	1200	0.17	0.21
36C	21	1200	0.1	0.13
48B	17.5	1400	0.23	0.24
	17.5	1600	0.3	0.31
48C	21	1400	0.13	0.16
	21	1600	0.16	0.2
49C	21	1600	0.17	0.22
50 / 60C	21	1600	0.23	0.29
60C	21	2000	0.29	0.34
60D	24.5	2000	0.21	0.27

Maintenance

NOTICE !

Failure to follow instructions will cause damage to the unit.

This unit is equipped with an aluminum coil. Aluminum coils may be damaged by exposure to solutions with a pH below 5 or above 9. The aluminum coil should be cleaned using potable water at a moderate pressure (less than 50psi). If the coil cannot be cleaned using water alone, Allied recommends use of a coil cleaner with a pH in the range of 5 to 9. The coil must be rinsed thoroughly after cleaning.

In coastal areas, the coil should be cleaned with potable water several times per year to avoid corrosive buildup (salt).

⚠ WARNING

To prevent serious injury or death:

1. Lock-out/tag-out before performing maintenance.
2. If system power is required (e.g., smoke detector maintenance), disable power to blower, remove fan belt where applicable, and ensure all controllers and thermostats are set to the “OFF” position before performing maintenance.
3. Always keep hands, hair, clothing, jewelry, tools, etc. away from moving parts.

A trained technician or service agency must perform maintenance and service on equipment. At the beginning of each heating or cooling season, indoor coils should be cleaned.

Do not use hydrofluoric acid, alkaline, or similar chemicals on coils. These chemicals are not necessary to dissolve salt, and may damage the fin coating. Acid washes are used to dissolve oils and greases, which generally are not present on most installations.

Alkaline washes are useful for dissolving oxides such as zinc oxide, aluminum oxide, and iron oxide (rust). These three oxides are more corrosion-resistant than base metals, so dissolving or removing them will cause an increase in corrosion.

CLEANING THE COIL

1 - Remove the coil from the cabinet or plenum, and take the coil to an appropriate place to clean it. Refrigerant leak detection sensor and line set joint sleeves must be removed as well.

2 - Vacuum or brush the coil to remove matted and surface debris from the fins. Use vacuum attachments and/or brushes that are non-destructive to fins.

3 - If oil deposits are present, spray the coil with a mild household liquid detergent to soften deposits. Do not leave the detergent on the coil for more than 10 minutes. Flush the coil thoroughly with potable water.

NOTE - *For units in coastal regions, fresh water will dissolve away any salt deposits. (Wash coils with fresh water at least every six months.)*

4 - Spray the coil at a vertical angle of 30 to 45 degrees with a constant stream of water at moderate pressure. A pressure washer with a fan nozzle will work best. Do not spray the coil from a horizontal direction.

5 - Direct the spray so that any debris is washed out of the coil and base pan. For most residential units, hot water is not necessary.

NOTE - *Attempting to back flush from the inside of the coil will require removing parts from the unit, and it may be very difficult to flush the whole coil surface. Attempting to blow water through a coil will slow the water stream and reduce the flushing action of the outer fin surface.*

6 - Replace the coil into the cabinet or plenum. Ensure that you have followed the proper procedure for routing and securing the refrigerant tubing. Reinstall refrigerant leak sensor and line set joint sleeves.

⚠ IMPORTANT

Ensure that the distributor lines are not rubbing together or kinked. All tubes must have enough clearance from other metal parts. Use wire ties to secure tubes to prevent movement that could cause the refrigerant tubing to fail.

Use of Coil-Furnace System During Construction

Units may be used for heating or cooling of buildings or structures under construction, if the following conditions are met to ensure proper operation:

DO NOT USE THE UNIT FOR CONSTRUCTION HEAT UNLESS ALL OF THE FOLLOWING CRITERIA ARE MET:

- Furnace must be in its final location. The vent system must be permanently installed per these installation instructions.
- Furnace must be installed as a two-pipe system and one hundred percent (100%) outdoor air must be provided for combustion air requirements during construction.
- A room thermostat must control the furnace. The use of fixed jumpers that will provide continuous heating is prohibited.
- The input rate and temperature rise must be set per the furnace rating plate.
- Supply and Return air ducts must be provided and sealed to the furnace. Return air must be terminated outside of the space where furnace is installed.
- Return air temperature range between 60°F (16°C) and 80°F (27°C) must be maintained.
- MERV 11, or greater, air filters must be installed in the system and must be regularly inspected and maintained (e.g., regular static checks and replaced at end of life) during construction.
- Blower and vestibule access panels must be in place on the furnace at all times.
- The furnace heat exchanger, components, duct system, and evaporator coils must be thoroughly cleaned following final construction clean−up.
- Ensure that refrigerant sensor is clean and the inlet is clear and free of debris (see figure 10).
- Air filters must be replaced upon construction completion.
- All furnace operating conditions (including ignition, input rate, temperature rise and venting) must be verified in accordance with these installation instructions.

EQUIPMENT MAY EXPERIENCE PREMATURE COMPONENT FAILURE AS A RESULT OF FAILURE TO FOLLOW THE ABOVE INSTALLATION INSTRUCTIONS.

FAILURE TO FOLLOW THE ABOVE INSTALLATION INSTRUCTIONS VOIDS THE MANUFACTURER'S EQUIPMENT LIMITED WARRANTY. ALLIED DISCLAIMS ALL LIABILITY IN CONNECTION WITH INSTALLER'S FAILURE TO FOLLOW THE ABOVE INSTALLATION INSTRUCTIONS.

NOTWITHSTANDING THE FOREGOING, INSTALLER IS RESPONSIBLE FOR CONFIRMING THAT THE USE OF CONSTRUCTION HEAT IS CONSISTENT WITH THE POLICIES AND CODES OF ALL REGULATING ENTITIES. ALL SUCH POLICIES AND CODES MUST BE ADHERED TO.

Decommissioning

Before carrying out this procedure, it is essential that the technician is completely familiar with the equipment and all its detail. It is recommended good practice that all refrigerants are recovered safely.

Prior to the task being carried out, an oil and refrigerant sample shall be taken in case analysis is required prior to re-use of recovered refrigerant. It is essential that electrical power is available before starting decommissioning.

a) Become familiar with the equipment and its operation.

b) Isolate system electrically.

c) Before attempting the procedure, ensure that:

- mechanical handling equipment is available, if required, for handling refrigerant cylinders;
- all personal protective equipment is available and being used correctly;
- the recovery process is supervised at all times by a competent person;
- recovery equipment and cylinders conform to the appropriate standards.

d) Pump down refrigerant system, if possible.

e) If a vacuum is not possible, make a manifold so that refrigerant can be removed from various parts of the system.

f) Make sure that cylinder is situated on the scales before recovery takes place.

g) Start the recovery machine and operate in accordance with instructions.

h) Do not overfill cylinders (no more than 80% volume liquid charge).

i) Do not exceed the maximum working pressure of the cylinder, even temporarily.

j) When the cylinders have been filled correctly and the process completed, make sure that the cylinders and the equipment are removed from site promptly and all isolation valves on the equipment are closed off.

k) Recovered refrigerant shall not be charged into another REFRIGERATING SYSTEM unless it has been cleaned and checked.

Sensor Maintenance

It is recommended to check the state of the sensor every six months, at the beginning of each cooling and heating season.

- Ensure that the sensor opening is clear and free of debris.
- Check that the sensor cable is in good condition.
- DO NOT use abrasive cleaning solutions or detergents to clean sensor opening.
- DO NOT use flammable compressed air solutions to clean the sensor opening.
- DO NOT vacuum sensor inlet opening, as this could cause damage to the sensor internal components.
- If sensor is clogged, it is recommended to replace sensor.
- When cleaning the evaporator coil, remove sensor from the coil. Follow recommended coil cleaning guidelines as described in installation instructions.

FIGURE 10. Example of Clear, Unobstructed Sensor Inlet