GENERAL MONITORS

MODEL 4801

Multi-Channel
Combustible Gas Monitor

The information and technical data disclosed in this document may be used and disseminated only for the purposes and to the extent specifically authorized in writing by General Monitors.

INSTRUCTION MANUAL 6/90

General Monitors reserves the right to change published specifications and designs without prior notice.

Part No. 4801/0088
Revision I - 6/90

Warranty

General Monitors warrants all of its products to be free from defects in workmanship or material under normal use and service within two (2) years (Hydrocarbon, H2S & CO Gas) and one (1) year (Flame Detection and Chlorine Gas) from date of shipment. The CO sensor carries a 6 month warranty. General Monitors will repair or replace, without charge, any equipment found to be defective during the warranty period. Final determination of the nature and responsibility for defective or damaged equipment will be made by General Monitors personnel. Gas detection elements which have been poisoned by contaminants are not included in this warranty. In all cases this warranty is limited to the cost of the equipment. All warranties hereunder are contingent upon proper use in the application for which the product was intended and do not cover products which have been modified or repaired without General Monitors approval or which have been subjected to neglect, accident, improper installation or application, or on which the original identification marks have been removed or altered. General Monitors responsibility under the above warranty shall be limited to the repair or replacement at General Monitors option at no charge to the purchaser for parts or labor, of any component which fails during the warranty period provided that the purchaser has promptly reported such failure to General Monitors in writing and General Monitors upon inspection, found such component to be defective. The purchaser must obtain shipping instructions for the return of any item under this warranty. provision and compliance with such instructions shall be a condition of this warranty.

Except for the express warranty stated above, General Monitors disclaims all warranties with regard to the products sold hereunder including all implied warranties of merchantability and fitness and the express warranties stated herein are in lieu of all obligations or liabilities on the part of General Monitors for damages including, but not limited to consequential damages arising out of/or in connection with the use or performance of the product.

Warning

1. High off scale meter readings may indicate an explosive concentration of gas at the sensor.
2. A subsequent fall in indicated gas concentration due to the application of a Master Reset signal does not imply that safe working conditions have been restored.

CONTENTS

Section 1 Introduction
Section 2 Specification
Section 3 Installation
Section 4 Operating Instructions
Section 5 Maintenance
Section 6 Basic Fault Finding
Section 7 Spare Parts
Section 8 Accessory Equipment

Section 1
Introduction

	Sub-section
General Description	1-1
Principle of Operation	1-2
Description of Components	1-3
Control Modules	1-4
Control Module Options	1-5
Chassis Assembly	1-6
Termination Options	1-7
Facilities Module	1-8
Hydrocarbon Sensors	1-9
Approved Housings	1-10
User Information Drawings	1-11

Introduction

1-1 General Description

The Model 4801 is a single channel Control Module which operates with the General Monitors Hydrocarbon Sensors to detect and monitor concentrations of combustible gases and vapors.

Each control module provides a 4-20mA analog output signal, open collector alarm outputs and optional potential free relay contact outputs. Other options include an alarm reflash capability and transient over-voltage protection of the sensor input circuitry.

The control modules are housed in four, eight or sixteen channel chassis assemblies. An optional Facilities Module may be inserted next to the the last channel position in each case. Interconnection is by means of a standard DIN 41612 two-part connector which facilitates field servicing and system expansion or reconfiguration. Note that a range of compatible control modules (Hydrogen Sulfide, Flame detection etc.) is available and these may be combined in any of the chassis types above. Each channel is coded, by means of a coding strip, to dedicate it to a particular module.

The chassis should be mounted in a non-hazardous and protected environment. Gas sensor assemblies in the hazardous areas to be monitored should be connected to the controller in accordance with the installation instructions contained in this manual.

The Model 4801 Control Module is designed to measure concentrations of combustible gases and vapors in the range 0-100% Lower Explosive Limit. Proper operation of the instrument depends upon routine recalibration procedures and these simple adjustments should be carried out at least **every 90 days.**

A comprehensive range of accessories is available to facilitate the installation and reliable operation of the instrument.

General Monitors is recognized as a leader in the field of gas detection and a dedicated team of experts is always available to provide advice or service as required.

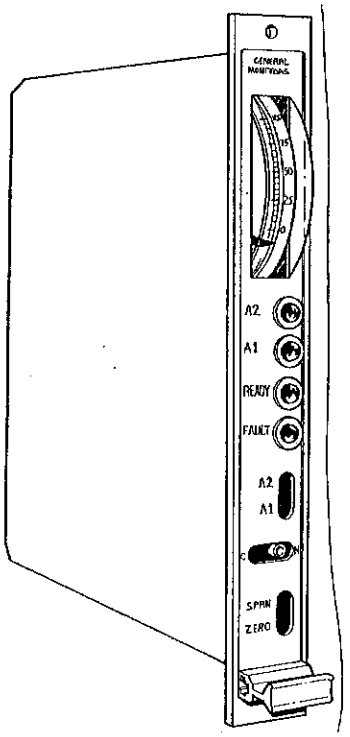

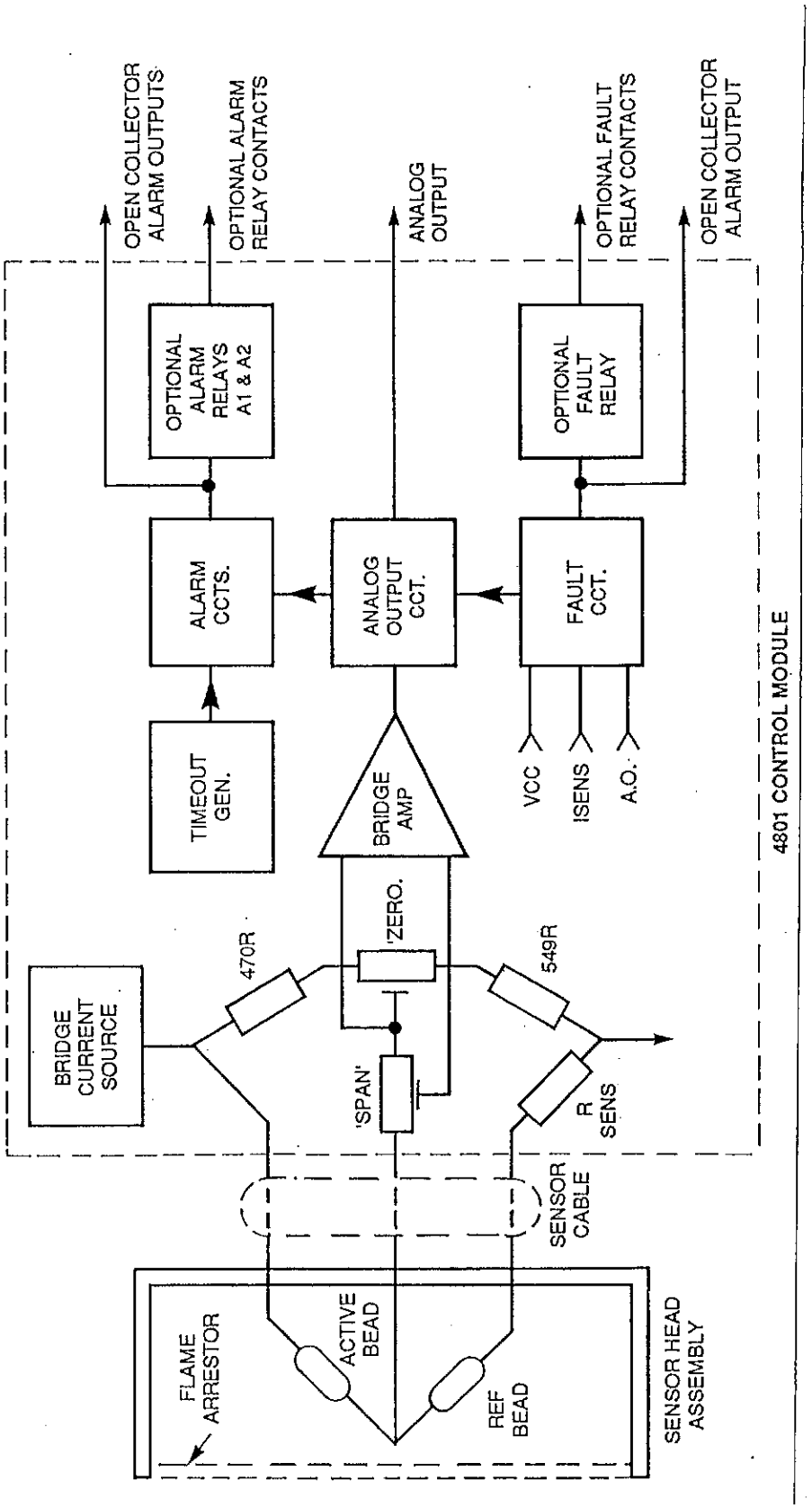
OPEN COLLECTOR ALARM OUTPUTS
OPTIONAL ALARM RELAY CONTACTS
ANALOG OUTPUT
OPTIONAL FAULT RELAY CONTACTS
OPEN COLLECTOR ALARM OUTPUT
OPTIONAL ALARM RELAYS A1 & A2
OPTIONAL FAULT RELAY
ALARM CCTS.
ANALOG OUTPUT CCT.
FAULT CCT.
TIMEOUT GEN.
BRIDGE AMP
VCC
ISENS
A.O.
'ZERO.
470R
549R
BRIDGE CURRENT SOURCE
'SPAN'
R SENS
4801 CONTROL MODULE
SENSOR CABLE
FLAME ARRESTOR
ACTIVE BEAD
REF BEAD
SENSOR HEAD ASSEMBLY

1-2 Principle of Operation

A high efficiency bridge current source supplies direct current to a Wheatstone bridge circuit. One leg of the bridge is formed by the sensor elements in series with a low-value sense resistor (R SENS). The other leg contains a resistive divider.

By means of a feed-back circuit which monitors the current through the sense resistor (R SENS) the sensor current is maintained at a value of 300mA.

With the sensor in clean air, initial bridge imbalance is trimmed out using the 'ZERO' potentiometer.

The reference bead is virtually identical to the active bead, the only difference being a thin coating on the reference bead which renders its catalyst inactive to gas. It responds in the same manner as the active bead to changes in the ambient levels of temperature, humidity and pressure. The two beads track together to eliminate errors due to these variables.

When a combustible gas/air mixture diffuses into the sensor through the flame arrestor, a catalytic oxidation of this mixture occurs on the active bead only. This results in a bridge imbalance voltage, proportional to the concentration of the gas mixture.

A suitable proportion of this imbalance voltage is tapped off the 'SPAN' potentiometer and amplified by the bridge amplifier. This signal is then converted into an analog output current, which is available at the rear terminals.

Preset 'A1' and 'A2' alarm circuits monitor the analog output signal and activate the alarm outputs. A timeout generator is incorporated to prevent spurious alarms occurring during sensor warm-up.

System fault circuits detect faults due to open or short circuit sensor lines, low supply voltage, low sensor current and under-range conditions. The fault circuitry is normally energized.

An over-range latch is incorporated. This maintains an over-range meter reading if the sensor is exposed to gas concentrations in excess of the lower explosive limit. The meter may be reset by connecting the MASTER RESET line to DC return.

1-3 Description of components

Item		Notes	Qty
1	Control module (P/N F47-005)	1	1 per channel
2	Chassis (P/N E47-060 or E47-160)	2	1
3	Facilities module (P/N F47-017)	3	Optional
4	Termination (See sub-section 1-7)		1 per channel
5	Sensor assemblies (See sub-section 1-10)		1 per channel
6	Sensor accessories (See Section 8)		Optional
7	Blank panel (P/N E47-040)		As required
8	Extender card (P/N F47-066)		Optional
9	Calibration equipment (See Section 8)		As required
10	Instruction manual (P/N 4801-0088)		As required
11	Calibration tool (P/N 928-725)		1

Notes:
1. P/N F47-005 refers to the Model 4801 Hydrocarbon control module
2. Select E47-060-16, -8 or -4 for 16, 8 or 4 channel versions respectively, rack mounting
   Select E47-160-16, -8 or -4 for 16, 8 or 4 channel versions respectively, panel mounting
3. Refer to Sub-section 1-8

Please consult your General Monitors representative for information and advice on special requirements.

1-4 Control Module (P/N F47-005)

The control module contains all of the electronic circuitry required for one gas monitoring channel.

This module interfaces with the customers cabinet wiring by means of a two-part connector which conforms to the DIN 41612 standard. The male part of the thirty-two pin connector is mounted on the rear of the Control Module card and mates with the corresponding female part which is mounted in the chassis.

This termination is common to all modules in the range, facilitating the production of systems for mixed applications. In order to avoid the possibility of inadvertently reversing modules in such systems, each channel is identified by means of a coding strip so that only the correct module type can be inserted in any matching channel position.

The Model 4801 control module front panel incorporates the following indicators and controls:

- Edgewise meter, scaled 0-100% LEL
- Red 'A1' and 'A2' LED gas alarm indicators
- Green 'READY' indicator
- Yellow 'FAULT' indicator
- Calibration Door mechanism and switch

For details concerning these controls and indicators refer to Section 4.

1-5 Control Module Options

The following options are available on the Model 4801 control module.

P/N F47-005-TO
This is the basic version having open collector alarm outputs but without relays or the ACCEPT/ OSCILLATOR circuitry. The following outputs are provided.

- TA1 – NPN open collector 'A1' alarm (Pin 12z)
- LA1 – As TA1 but with internal pull-up resistor (Pin 14d)
- TA2– As TA1, but referenced to 'A2' alarm (Pin 14z)
- LA2 – As LA1, but referenced to 'A2' alarm (Pin 16z)
- CAL – Pull down to 0.7V approximately in Calibration mode (Pin 18z)
- AO+ – 4-20mA Analog output (500 ohms max load) (Pin 24z)
- AO– – Negative line of AO+ (Pin 24d)

P/N F47-005-TA
This incorporates all of the facilities of P/N F47-005-TO but also includes the ACCEPT/OSCILLATOR circuitry, giving the following additional features:

- Reflash of A1 and A2 indicators for new alarms
- Pulsing of LA1 and LA2 outputs by the Oscillator
- Alarm Accept input, giving steady alarm indication and steady LA1 and LA2 outputs (Pin 18d)
- Unaccepted Alarm Outputs, an open collector output normally high, which goes low in the event of an unaccepted alarm (Pin 10d)
- Flashing Fault indication

P/N F47-005-RO
This is similar to F47-005-TO except that the following features are added:

- SPDT FAULT relay (Pins 2z, 2d and 4z)
- SPDT 'A1' relay (Pins 6z, 8z and 10z)
- SPDT 'A2' relay (Pins 4d, 6d and 8d)

Note that the FAULT relay is always energized in NORMAL operation. The 'A1' and 'A2' relays may be normally energized or normally de-energized.

P/N F47-005-RA
This combines the facilities of both P/N F47-005-TA and P/N F47-005-RO.

Varistor Option
Any of the four previous options may be additionally supplied with three Metal Oxide Varistors (Mov. 2, 3 and 4) (see page 6-8) for the suppression of transient over-voltages on the sensor input lines (Pins 28z & d, 30z & d and 32z and d) such as might occur due to indirect lightning strikes. To specify this option, add suffix 'M' to the part number, e.g. F47-005-TAM.

Alarm Configurations
As previously noted, the 'FAULT' alarm is **always energized** in **normal** operation and de-energizes in a **Fault** condition. No latching capability exists for the 'Fault' alarm.

The 'A1' and 'A2' gas alarms may be configured as follows: (see page 6-8)

A1	Normally de-energized	Insert jumper P1-0
A1	Normally energized	Insert jumper P1-1
A2	Normally de-energized	Insert jumper P2-0
A2	Normally energized	Insert jumper P2-1
A1	Non-latching	Remove diode D22
A1	Latching	Insert diode D22
A2	Non-latching	Remove diode D8
A2	Latching	Insert diode D8

The above configurations may be modified by the user, if required. When ordering, the configurations may be defined verbally or, may be defined as follows:

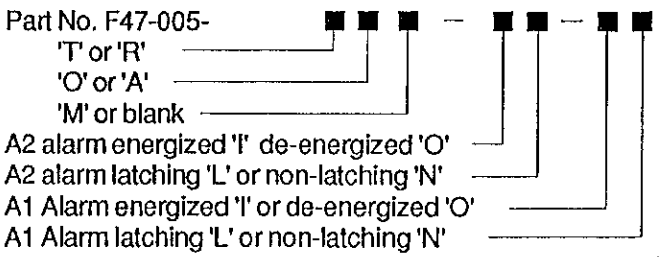

If the configuration is not specified, the -ON-ON format will be shipped.

1-6 Chassis Assembly (P/N E47-060

The chassis assembly consists of two black anodized end-plates, with integral mounting slots, and five extruded aluminum sections mounted between them. Four of these sections are fitted with spacer strips which serve to align the block Noryl card guides on which the Control Modules slide. Connector mounting strips are attached to the extruded sections at the rear of the Chassis and are used to mount the DIN 41612 connectors for termination purposes.

The rear part of each channel code strip is mounted adjacent to its connector on the Connector Mounting Strip. A channel is coded by inserting red plastic coding pins in the slots provided. In the case of the Model 4801 control module, the slot numbers are '1' and '12'.

Chassis Assembly P/N E47-160

This Chassis Assembly is similar in construction to Chassis P/N E47-060 except that the end plates are adapted to panel mounting using self locking fasteners, in conjunction with a Bezel (see User Information Drawing page 1-9).

1-7 Termination

A Screw termination (P/N 921-377) is provided for the female DIN 41612 connector mounted at the rear of the chassis. This is fully compatible with the male connector mounted on the Control Modules.

The connector pin designations for the Model 4801 control module are shown in the following diagram as they appear looking from the rear of the chassis.

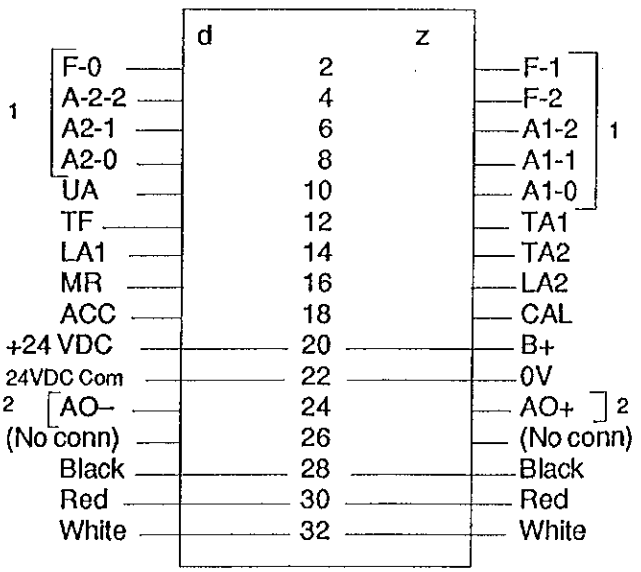

Notes:

1 These relay contact outputs are relevant only if the relay option is used.

2 These pins must be shorted if an analog output is not required

Screw Termination P/N 921-377
This 32-pin connector conforms to the DIN 41612 specification.

The insulation stripping length is 0.4" in each case. A slotted conical drive screw is turned in a clockwise direction after the conductors are fully inserted in the openings provided, thus providing a secure and vibration-proof termination.

Manufacturer:	Phoenix
Connector:	P/N 22 85 195 (Type SFL/F32/ZD
Insulation housing:	Green fiber glass reinforced 6.6 polyamide
Spring contacts:	CuSn6 with 0.8 micron hard gold plating
Screw contacts:	CuSn39 with nickel plating
Wire size:	14 AWG - 18 AWG
Stripping length:	0.4"
Max current:	4A
Rated voltage:	250 VAC
Insulation:	250 VAC to VDE 0110 Gr.C.

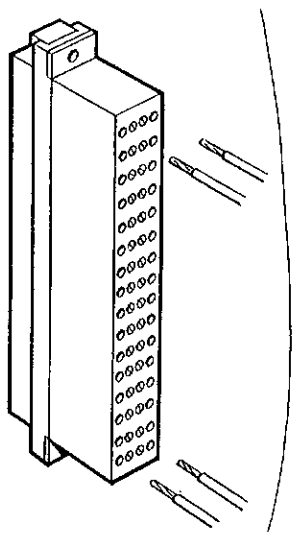

1-8 Facilities Module

The Facilities Module is an optional assembly which plugs into the right-hand side next to the last control module position in a 4, 8 or 16 Channel Chassis. This module can be ordered with several options to meet customer requirements, for example:

Integral Master Reset Switch
Integral Accept Switch
Integral Common Alarms

F47-017-1
01 and Trip Amplifier module with Master Reset Option.
F47-017-2
01 & Trip Amplifier module with Accept Option
F47-017-3
01 & Trip Amplifier module with Master Reset and Accept Option.

F47-117
The F47-117 Facilities Module is designed to provide common alarm outputs for A1, A2 Fault and unaccepted alarm. A1, A2 and Fault may or may not be supplied with relays.

The UA buss is switched low when an alarm is activated on any channel, this turns transistor Q8 on thus energising relay K4. The voltage developed across the coil of K4 turns on transistor Q9 which in turn switches off transistor Q10 which allows IC1-5 or IC1-6 to switch on depending upon where it is an A1 or A2 alarm. This gives an open collector output on 24d for A1 or 24z for A2.

The fault relay K3 is normally energized, IC1-7 is normally switched on. When a control module goes into fault a logic high signal appears on the Tf buss. This turns transistor Q7 on, thus pulling the collector of Q7 and input to IC1-7 low causing IC1-7 to switch off, thus de-energizing IC3 fault relay and the Tf open collector on 12d.

A1 and A2 circuits are similar, so only A1 will be dealt with. When an A1 alarm occurs the A1 buss is pulled low. This switches on transistor Q2 which allows capacitor C4 to charge up. Capacitor C4 is necessary as when the accept/reflash option is installed on the control module the LA1 buss will pulse at the same frequency as the LED's. Capacitor C4 prevents the common alarm output from following suit. When C4 is sufficiently charged it switches transistor Q4 on which in turn switches on IC1-3 and IC1-4 giving both a relay output where fitted and two open collector outputs. Resistors R12, R14, R16 and transistor Q6 are necessary when normally energized relays or open collector A1 output is required.

During calibration, the cal buss is held low and hence the base of transistors Q3 and Q4 via diodes D1 and D4 respectively.

The card is powered through D11 and protected by fuse FS1 smoothed by capacitors C5 and C6.

F47-117-TO-0
01 & Trip Amplifier module with Master Reset and Accept Option, Open Collector Outputs and Unaccepted alarm relay output. Normally de-energized alarms.
F47-117-RO-0
01 and Trip Amplifier module with Master Reset and Accept Option, Open Collector outputs, Relay outputs and Unaccepted Alarm relay outputs. Normally de-energized alarms.
F47-117-TO-1
As TO-0 with normally energized alarms
F47-117-RO-1
As RO-0 with normally energized alarms

Pin Assignments for the Facilities Module are as follows:

	d	z	
CF-0	2	2	CF-1
CA2-2	4	4	CF-2
CA2-1	6	6	CA1-2
CA2-0	8	8	CA1-1
UA BUSS	10	10	CA1-0
CTF	12	12	CTA1
LA1 BUSS	14	14	CTA2
MR BUSS	16	16	LA2 BUSS
ACC BUSS	18	18	CAL BUSS
B+ BUSS	20	20	B+ BUSS
OV BUSS	22	22	OV BUSS
CUA 1	24	24	CUA 2
CLA 1	26	26	CLA 2
TF BUSS	28	28	OV
OV	30	30	UAR-0
UAR-1	32	32	UAR-2

Please consult your General Monitors representative for details.

1-9 Hydrocarbon Sensors

P/N 10001-1
Standard industrial hydrocarbon sensor, temperature range – 65°F to + 200°F (– 40°C to + 75°C) CSA approved

P/N 10014-1
High temperature standard industrial hydrocarbon sensor. Same as P/N 10001-1 except may be used at temperatures up to 392°F (200°C). (Not certified).

P/N 10058-1
Same as P/N 10001-1 except sensor body is stainless steel.

1-10 Approved Housing

CSA Approved
P/N 10252 Standard Industrial, 3/4" NPT conduit entry.

PTB, BASEEFA and SAA housing are also available, please consult your representative.

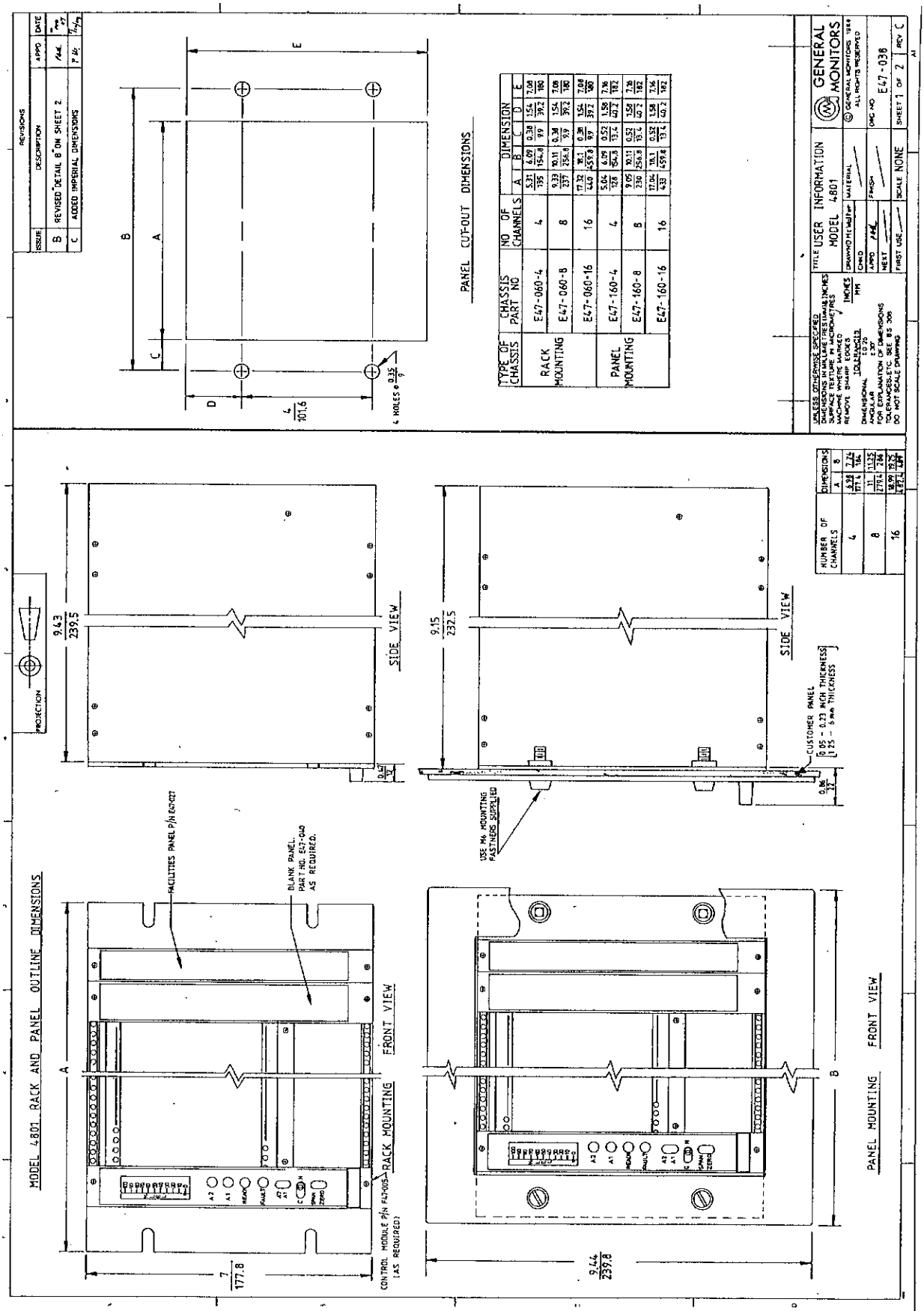

TYPE OF CHASSIS	CHASSIS PART NO	NO OF CHANNELS	DIMENSION A	B	C	D	E
RACK MOUNTING	E47-060-4	4	5.31 / 135	6.09 / 154.8	0.38 / 9.9	1.54 / 39.2	7.08 / 180
	E47-060-8	8	9.33 / 237	10.11 / 256.8	0.38 / 9.9	1.54 / 39.2	7.08 / 180
	E47-060-16	16	17.32 / 440	18.1 / 459.8	0.38 / 9.9	1.54 / 39.2	7.08 / 180
PANEL MOUNTING	E47-160-4	4	5.04 / 128	6.09 / 154.8	0.52 / 13.2	1.58 / 40.2	7.16 / 182
	E47-160-8	8	9.05 / 230	10.11 / 256.8	0.52 / 13.2	1.58 / 40.2	7.16 / 182
	E47-160-16	16	17.04 / 433	18.1 / 459.8	0.52 / 13.2	1.58 / 40.2	7.16 / 182

NUMBER OF CHANNELS	DIMENSIONS A	B
4	6.98 / 177.4	7.24 / 184
8	11 / 279.4	11.25 / 286
16	18.99 / 482.6	19.25 / 489

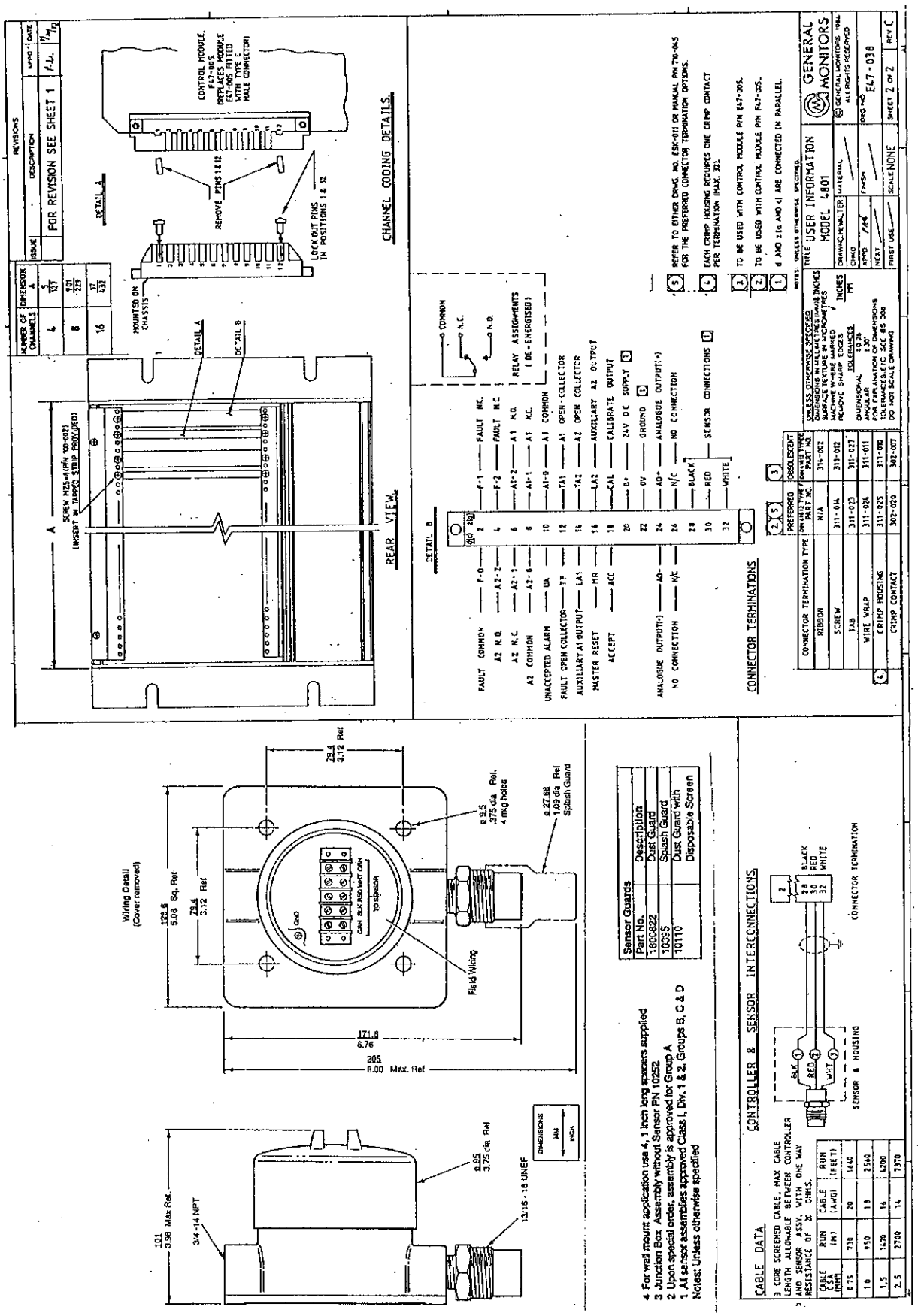
REAR VIEW
CHANNEL CODING DETAILS
CONNECTOR TERMINATIONS
CONTROLLER & SENSOR INTERCONNECTIONS
CABLE DATA
Wiring Detail (Cover removed)
Field Wiring
Sensor Guards
Part No. Description
1800822 Dust Guard
10395 Splash Guard
10110 Dust Guard with Disposable Screen
SENSOR & HOUSING
CONNECTOR TERMINATION
Notes: Unless otherwise specified
1 All sensor assemblies approved Class I, Div. 1 & 2, Groups B, C & D
2 Upon special order, assembly is approved for Group A
3 Junction Box Assembly without Sensor PN 10252
4 For wall mount application use 4, 1 inch long spacers supplied

Section 2
Specification

	Sub-section
System specification	2-1
Control Module	2-2
Chassis	2-3

Model 4801

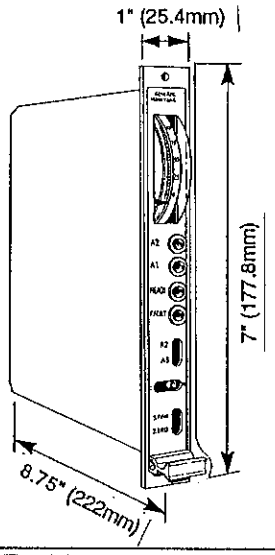

Specification

2-1 System Specifications

Note: The Model 4801 system complies with the relevant requirements of British Standard BS 6020 and Canadian Standard CSA C22.2 No. 152-1987.

Application:	Combustible gas monitor
Measuring range:	0-100% LEL
No of channels:	1 per Control Module
Channel isolation:	Fully independent operation
Controller location:	Protected non-hazardous environment
Sensor location:	Hazardous area (Refer to Section 3)
Short term repeatability:	± 5% FSD over 1 hour
Long term repeatability:	± 10% FSD over 3 months
Alarm correlation:	Within 5% FSD
Accuracy (linearity):	± 5% FSD
Temperature variation:	± 10% FSD over temperature range (– 40 to + 150°F)
Pressure variation:	± 10% FSD from 950 to 1100 mBar
Humidity variation:	± 10% FSD from 20 to 90% RH
Response time:	T50 < 10 secs.
Supply voltage variation:	3% FSD over voltage range
Vibration variation:	± 5% FSD at 2g over 10 to 150Hz
Power up variation:	< 3% FSD within 5 minutes

2-2 Control Module (P/N F47-005)

Mechanical

Height:	7", 4U (177.8mm)
Width:	1" (25.4mm)
Depth:	8.75" (222mm)
Weight:	0.6 pounds (approx)
Mounting:	Chassis (P/N E47-060 or E47-160)
Termination:	Connector DIN 41612

Environmental

Storage temperature:	– 40°F to 150°F (–40 to + 66°C)
Operating temperature:	0°F to 150°F (– 18°C to + 66°C)
Humidity range:	20 to 90% RH non-condensing

Electrical

Supply voltage:	22-32 VDC
Supply fuse:	1A Char 'T' (5 x 20mm)
Varistor rating:	7 J
Sensor drive:	300mA DC
Drive limit:	430 mA D.C.
Sensor cable:	3 conductor shielded
Cable resistance:	40 ohms max loop

Cable (AWG)	Length (Feet)	Cable CSA (mm^2)	Length (m)
20	1640	.75	730
18	2560	1.0	950
16	4200	1.5	1470
14	7370	2.5	2700

Cable runs calculated for a 22 volt supply voltage and 25°C.

Analog output:	4-20mA
AO limit:	27 mA
AO load	0-500 ohms
Alarm output ratings:	TF, TA1, TA2 (–'T'– option) 100 mA TF, TA1, TA2 (–'R'– option) 50 mA LA1, LA2 50 mA
Relay contact ratings:	117VAC 1 amp 30 VDC 2 A
Master reset load:	3 mA at 15 V
Accept load:	220 uA at 15V
Timeout period:	60 seconds

2-3 Chassis

Part No.	Height	Width	Depth	Weight
Rack mounting				
E47-060-16 (16 channel)	7"	19"	9.5"	3.85lb
E47-060-8 (8 channel)	7"	11"	9.5"	2.75lb
E47-060-4 (4 channel)	7"	7"	9.5"	1.94lb
Panel Mounting				
E47-160-16 (16 channel)	9.5"	19.3"	9.2"	3.85lb
E47-160-8 (8 channel)	9.5"	11.25"	9.2"	2.75lb
E47-160-4 (4 channel)	9.5"	7.25"	9.2"	1.94lb

Mounting

16 channel – 19 " rack or panel
8 channel – rack or panel
4 channel – rack or panel

Channel Assignment	Coding strip (P/N 921-798)
Termination:	DIN 41612

All panel mounting chassis are supplied with a Mounting Bezel as follows:

4 channel	P/N E26-628
8 channel	P/N E47-093
16 channel	P/N E26-093

Section 3
Installation

	Sub-section
On receipt of your Equipment	3-1
Chassis Installation	3-2
Installation of Sensor Head Assemblies	3-3
Sensor Locations	3-4
Catalytic Poisons	3-5
Recommendations for Sensor Field Cables	3-6
Sensor Cable Termination	3-7
Analog Output Termination	3-8
Relay Terminations	3-9
Open-Collector Outputs	3-10
Power Connections	3-11
Master Reset & Accept Signals	3-12
Power from AC Supply Voltage	3-13
Caution Note	3-14
Initial Application of Power	3-15

Installation

3-1 On Receipt of your Equipment

All items of equipment shipped by General Monitors are pre-packed in strong containers and enclosed in a shock-absorbing filling which affords a considerable degree of protection against physical damage. The contents should be carefully removed and checked against the enclosed packing slip.

Any discrepancies between the contents and the packing slip must be reported to General Monitors within ten days of receipt of the shipment. General Monitors cannot be held responsible for shortages not reported within this period.

Damage to the contents of a shipment should be brought to the attention of the carrier immediately and a claim filed.

3-2 Chassis Installation

The chassis should be mounted in a non-hazardous protected environment. The sixteen channel version is suitable for 19" rack mounting (P/N E47-060-16).

The chassis should be subjected to a minimum of shock and vibration. Although the instrument is to a great extent immune to electromagnetic interference, it should not be mounted in close proximity to radio transmitters or similar equipment.

The controllers require free air circulation to avoid excessive heat build-up inside the enclosure. If controllers are to be stacked vertically within an enclosure, forced air circulation will be required.

In installations where two or more controller types are to be mixed in one chassis, check that the individual channel coding strips match the channel application.

The coding strips are pre-configured at the factory and the male portion is provided ready mounted on each Control Module. The female portion, when provided unmounted with the Control Module for system expansion, should be fastened in position on the Connector Mounting Strip so as to mate with its counterpart on the Control Module.

Connectors for system expansion should be fastened in a similar fashion, using the screws and nylon insert nuts provided.

Do not over-tighten the connector or coding strip fasteners, as this may damage the plastic moldings.

3-3 Installation of Sensor Head Assemblies.

The sensor head assemblies should be installed in the hazardous areas in accordance with the relevant regulations and practices of the country concerned. The mounting should be as free from shock and vibration as possible, and must be accessible for calibration purposes. Sensors should always be mounted pointed down, so as to avoid accumulation of moisture and particulate deposits.

Various sensor accessories are available to minimize the effects of rain, wind and particulate matter. Refer to Section 8 ' Accessory Equipment'.

3-4 Sensor Locations

Due to the many variables involved, there are no hard and fast rules defining the optimum location for a sensor. The following should, however, be kept in mind.

1 Consider the emission temperature and vapor density of the gas. Sensors should be located near the floor for gas and vapors which are heavier than air, and close to the roof or ceiling for gases lighter than air.

2 Locate sensors where prevailing air currents contain maximum concentration of gas.

3 Consider how the gas will disperse. Generally, sensors should not be located too far away from a potential leak point. Liquids of low volatility, in particular, require the location of the sensor in the immediate area of the vapor source.

4 Observe the temperature limitations quoted in the individual sensor data sheets. If a sampling or pre-conditioning system is to be employed, always ensure that vapors will not condense in the piping of the system.

3-5 Catalytic Poisons

Sensors may be adversely affected by prolonged exposure to certain atmospheres. These in general are catalytic poisons although other substances such as silicones coat the sensor beads, rendering them insensitive to combustible gases.

Such loss of sensitivity may be gradual, if the poisons are present in very low concentrations, or rapid in the event of large concentrations of poison being present.

The more important poisons are:

Halides	Compounds containing fluorine, chlorine, bromine, iodine, SO_2, H_2S and CS_2
Sulfur compounds	
Heavy metals, e.g. Tetraethyl lead	

Silicones, contained in greases or aerosols, are the most common 'coating' agents, which are not true sensor poisons but reduce sensor response.

Other materials which have a deleterious effect include mineral acid vapors and caustic vapors which attack the sensor physically.

The presence of such poisons and damaging vapors does not imply that the catalytic combustion type sensor may not be used in these locations. A careful analysis of ambient air conditions should be undertaken and the customer should be aware that sensor calibration may need to be repeated at shorter intervals.

3-6 Recommendations for Sensor Field Cables

The sensor cable should be a three conductor stranded cable of sufficient cross sectional area (see Sub-section 2-2). The total loop resistance excluding the sensor must never exceed 40 ohms (i.e. 20 ohms per conductor). Due to the low levels of sensor signal voltages, many industrial environments will require the use of a shielded cable to guard against extraneous electrical noise. This shield should be enclosed in a suitable insulating outer jacket, and should be grounded only at the controller end of the cable.

Care should be taken, particularly at the sensor end, that the shield does not come into contact with any metal conduit or junction box. Ideally the cable should be continuous and unjointed between the controller location and the sensor head junction box. However, if a joint is unavoidable, this must be of good quality solder and not subject to variations in contact resistance.

Avoid running sensor cables close to high power cables, radio transmission lines or cables subject to pulses of high current.

Where a controller is to be located some distance from a cluster of sensors, a multiconductor shielded cable and junction box may be employed. Each sensor may then be connected to the junction box using a three conductor shielded cable, where the conductors are individually jointed into the multiconductor cable by means of high quality joints. The individual shielding braids should be connected to an insulated bus bar which is then connected to the braid of the multi-conductor cable. Electrical contact between the shields and the junction box metalwork should be avoided. The junction box may be grounded to power ground as required.

3-7 Sensor Cable Termination

Remove the sensor junction box lid to reveal the numbered terminal strip. The recommended terminal assignments are given below.

Terminal Mark	Sensor lead
BLK	Black
RED	Red
WHT	White

Connect the sensor cable as required.

Ensure that the shielded cable cannot come into contact with the junction box, or conduit when installed.

Ensure that all connections are tight. Terminate the sensor cable conductors on the intermediate terminals at the rear of the cabinet. The shield should be terminated on the system ground bus as appropriate to the connection system being used.

Sensor lead	Termination designation
Black	28 d/z
Red	30 d/z
White	32 d/z

4 For wall mount application use 4, 1 inch long spacers supplied
3 Junction Box Assembly without Sensor PN 10252
2 Upon special order, assembly is approved for Group A
1 All sensor assemblies approved Class I, Div. 1 & 2, Groups B, C & D
Notes: Unless otherwise specified

Sensor Guards	
Part No.	Description
1800822	Dust Guard
10395	Splash Guard
10110	Dust Guard with Disposable Screen

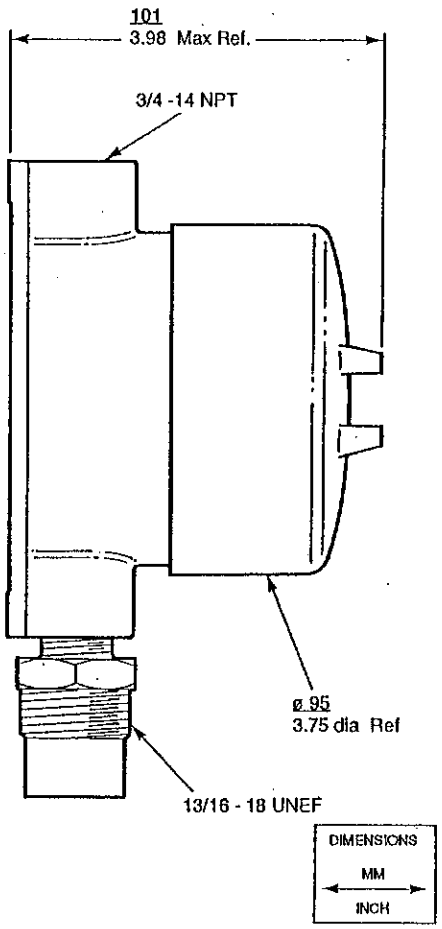

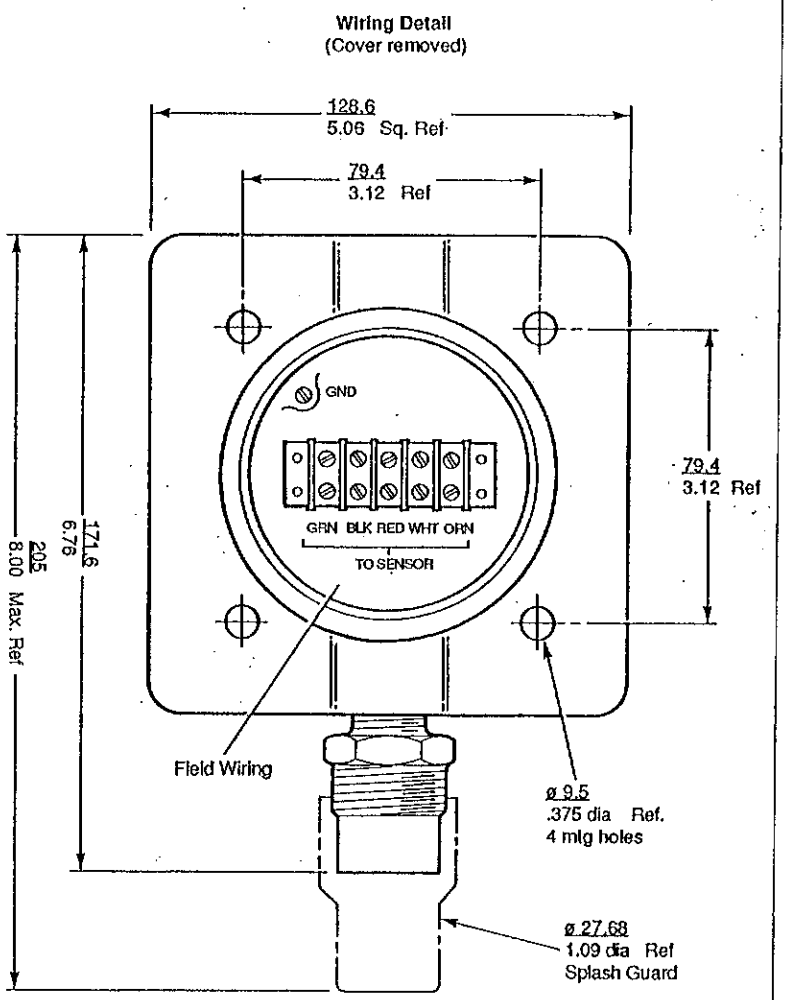

3-8 Analog Output Termination

The Analog output is a 4-20mA current signal which will operate into any resistive load between 0 and 500 ohms. Loads in excess of this maximum value will result in a Fault indication. Where the Analog Output is not being used to drive external equipment, it is a common oversight to omit the Analog Output terminations during system installation, thus giving rise to FAULT displays on all channels. This may be avoided by shorting the AO+ (Pin 24z) and AO– (Pin 24d) terminals during installation.

3-9 Relay Terminations

Relay outputs are labeled as shown in the following table, where it is assumed that the relays are de-energized.

Relay	Common	Normally Open	Normally Closed
A2	A2-0 = Pin 8d	A2-2 = Pin 4d	A2-1 = Pin 6d
A1	A1-0 = Pin 10z	A1-2 = Pin 6z	A1-1 = Pin 8z
Fault	F-0 = Pin 2d	F-2 = Pin 4z	F-1 = Pin 2z

Note that the 'FAULT' relay is always configured in a normally energized format and de-energizes in a FAULT condition. The 'A1 and A2' relays may be normally energized, installing jumpers 'P1-1 and P2-1'.

The relay contacts are rated at 1A 125VAC and 2A 30VDC, but ensure that the panel wiring and intermediate terminations are compatible with the voltage, current and power requirements of the load. Inductive loads will generally require suppression devices such as clamping diodes or varistors. Capacitive loads may require current limiting so as to limit inrush currents to a safe value below the maximum rating of the contacts.

3-10 Open-Collector Outputs

The operation of these outputs is fully described in Section 6 of this manual and output specifications are given in Section 2.

The output terminations are repeated in the following table for convenience.

Alarm Output	Main Output	Auxiliary Output
A2	TA2 = Pin 14z	LA2 = Pin 16z
A1	TA1 = Pin 12z	LA1 = Pin 14d
Fault	TF = Pin 12d	

The A1 and A2 open-collector outputs are fitted with isolating diodes so these outputs may be commoned together. The fault output of modules can be commoned by using the fault relay contacts. To common the fault output in conjunction with a common Facilities Module, the TF open collector output of each card must be connected via a 10K resistor to the D.C. supply and also via a diode IN4148 (anode to TF output) to the TF input of the Facilities Module.

3-11 Power Supply Connections

The positive lead of the 24 volt DC supply should be connected to Pins 20z and / or 20d. Similarly the 0 volt (24VDC common) supply should be connected to Pins 22z and / or 22d. Care should be taken, particularly if the supplies are looped from one channel to the next, that cable of adequate cross-section is used.

In general, use cables as short as possible to avoid substantial voltage drops between the supply and the chassis.

3-12 Master Reset and Accept Signals

Both of these inputs, if required by the options chosen for the Control Modules, require single-pole Normally Open switches, connected between the respective terminals and DC ground. These switches are customer supplied.

3-13 Power from AC Supply

110/220/240 VAC 50/60 Hz power supplies are available. These may be mounted at any convenient location within a cabinet.

Chassis type	Power unit
E47-060-16	A00-020

3-14 Caution Note

Externally applied high voltages may be present on the relay contact terminals. These will generally be independent of the supply to the controller and caution should be exercised when working in this area. Electric shocks felt when wiring the alarm relay contacts on a low voltage DC system could indicate the presence of unsuppressed inductive loads and should be investigated.

3-15 Initial Application of Power

1 Using the calibration door tool, (P/N 928-725) place all channels in Calibration mode by sliding the CAL door actuators to the left.

   Note that the A1 and A2 main outputs and relays, if provided, will be held in standby condition in this mode, the front panel alarm indicators will be active. The TF, LA1 and LA2 outputs are also active in CAL mode.

2 Apply power to the system, and observe the indicators on the front panel of each control module.

Under normal conditions, the meter reading will settle in the range 0-100% LEL, and no front panel indicators will illuminate during the time-out period of approximately one minute. Should a FAULT indicator continue to flash, refer to Section 6.

Allow the system 60 minutes to stabilize.

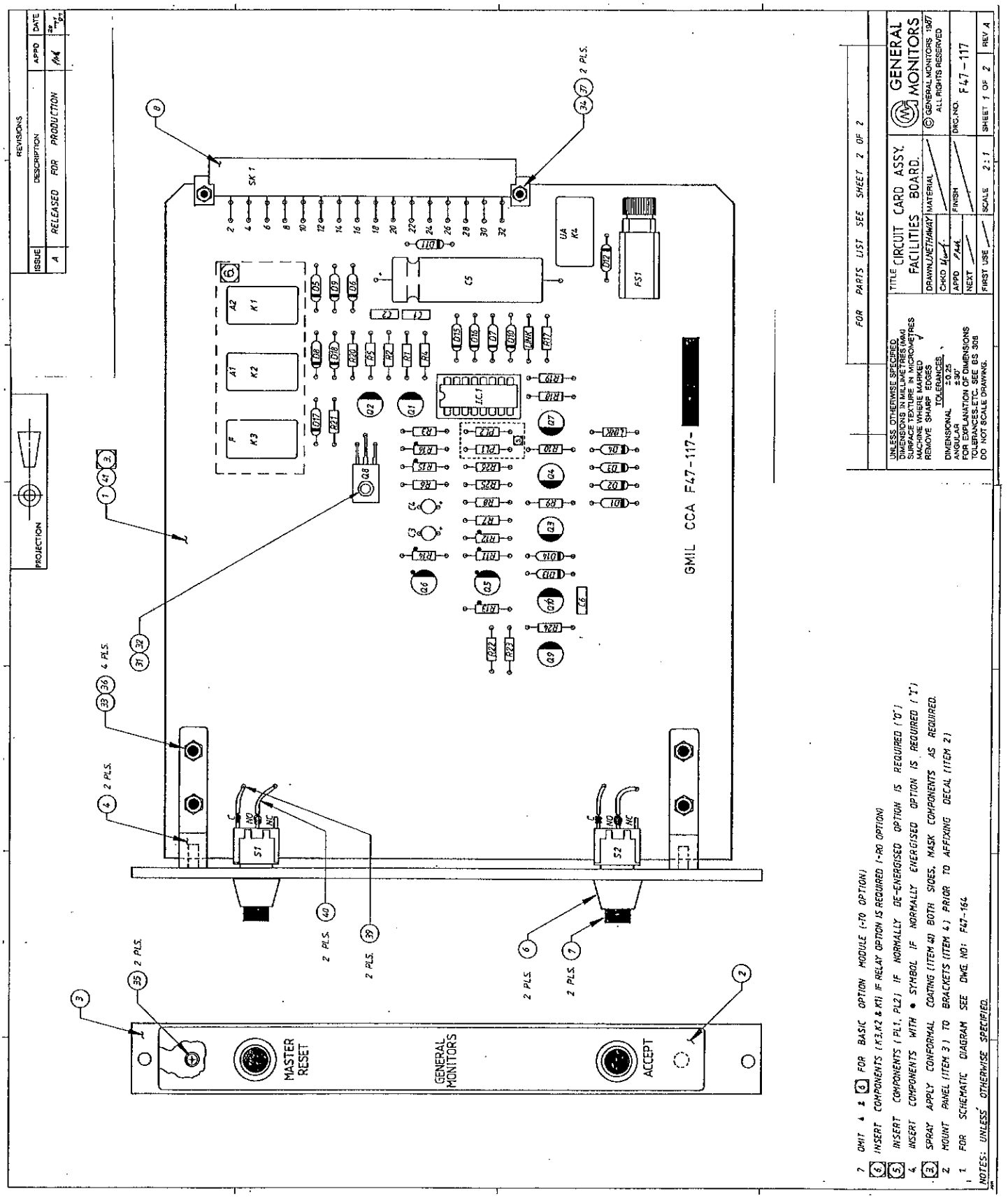
REVISIONS
ISSUE
DESCRIPTION
APPD
DATE
A
RELEASED FOR PRODUCTION
PROJECTION
SK 1
GMIL CCA F47-117-
MASTER RESET
GENERAL MONITORS
ACCEPT
S1
S2
2 PLS.
4 PLS.
FOR PARTS LIST SEE SHEET 2 OF 2
TITLE CIRCUIT CARD ASSY. FACILITIES BOARD.
GENERAL MONITORS
DRAWN JNETHMAN
CHKD
APPD
NEXT
FIRST USE
MATERIAL
FINISH
SCALE 2:1
DWG.NO. F47-117
SHEET 1 OF 2
REV A
UNLESS OTHERWISE SPECIFIED
DIMENSIONS IN MILLIMETRES (MM)
SURFACE TEXTURE IN MICROMETRES
MACHINE WHERE MARKED
REMOVE SHARP EDGES
TOLERANCES
DIMENSIONAL ± 0.25
ANGULAR ± 30'
FOR EXPLANATION OF DIMENSIONS TOLERANCES, ETC. SEE BS 308
DO NOT SCALE DRAWING.
© GENERAL MONITORS 1987
ALL RIGHTS RESERVED
NOTES: UNLESS OTHERWISE SPECIFIED.
1 FOR SCHEMATIC DIAGRAM SEE DWG. NO: F47-164
2 MOUNT PANEL (ITEM 3) TO BRACKETS (ITEM 4) PRIOR TO AFFIXING DECAL (ITEM 2)
3 SPRAY APPLY CONFORMAL COATING (ITEM 40) BOTH SIDES, MASK COMPONENTS AS REQUIRED.
4 INSERT COMPONENTS WITH • SYMBOL IF NORMALLY ENERGISED OPTION IS REQUIRED ("1")
5 INSERT COMPONENTS (PL1, PL2) IF NORMALLY DE-ENERGISED OPTION IS REQUIRED ("0")
6 OMIT 4 & 5 FOR BASIC OPTION MODULE (-70 OPTION)
INSERT COMPONENTS (K3,K2 & K1) IF RELAY OPTION IS REQUIRED (-R0 OPTION)

Section 4
Operating Instructions

	Sub-section
Function of Indicators & Controls	
LEL Meter	4-1
Ready Indicators	4-2
Alarm Indicators	4-3
Fault Indicator	4-4
Calibration Mode	4-5
Master Reset Switch	4-6
Accept Switch	4-7
Calibration Instructions	4-8
Pre-Calibrated Systems	4-9
Calibration Notes	4-10
Alarm Settings	4-11
Pre-set Adjustments	4-12
Set Electronics Supply Voltage	4-13
Set Bridge Amplifier Bias Adjustments	4-14
Set Sensor Current	4-15

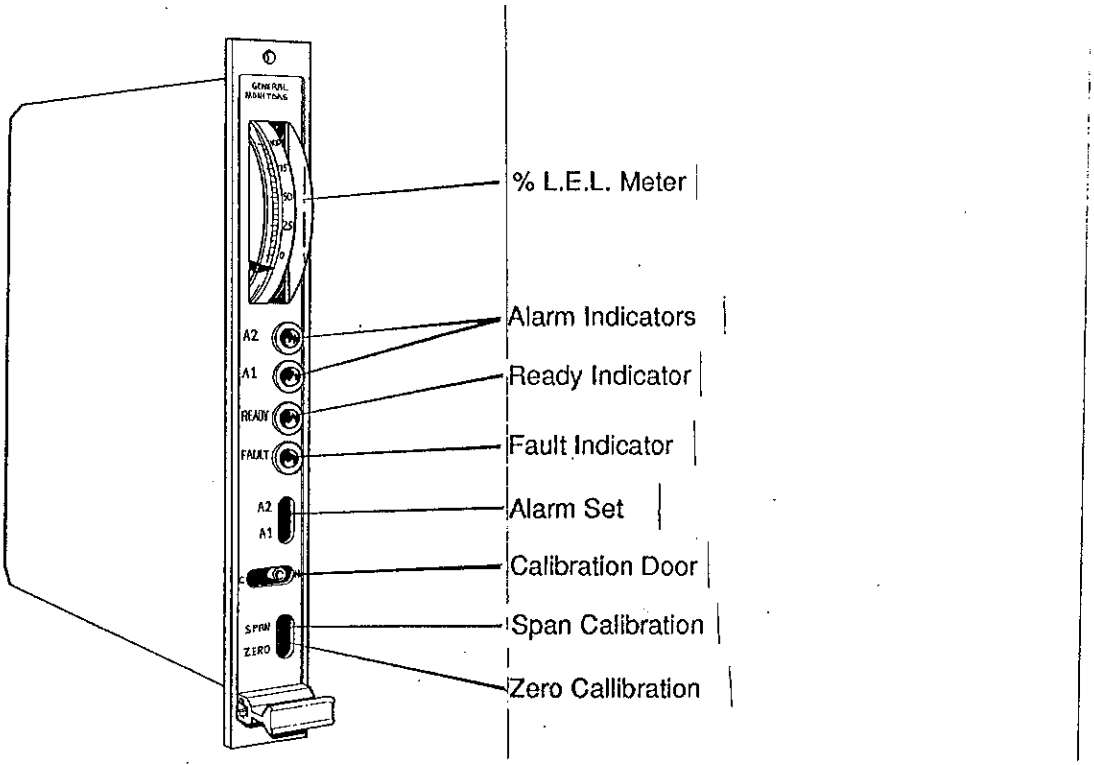

Operating Instructions

The General Monitors Model 4801 Controllers will normally be mounted in a control room in direct view of the operating personnel. The alarm indicators chosen for this instrument provide a visible display even in high ambient lighting conditions.

Function of Indicators and Controls

4-1 % LEL Meter

The analog meter scale is from 0 to 100% of the Lower Explosive Limit (LEL) of the gas/air mixture to which each channel has been calibrated.

Readings in excess of 100% LEL indicate that the concentration of gas in the vicinity of that channel's sensor presents a serious potential hazard. Such over-range indications are latched and must be manually reset by a Master Reset Switch.

Should a system malfunction occur, the Fault indicator will be lit and the meter will read under-range.

4-2 Ready Indicator

This green light-emitting-diode (LED) normally glows steadily indicating that the channel is operational, and the time-out period of 60 seconds is complete.

4-3 Alarm Indicators

The red 'A1' and 'A2' LED indicators are illuminated whenever the gas concentration at the sensor exceeds the set-point level to which the alarms have been pre-set. In normal operation this action will be accompanied by a gas alarm output signal and the actuation of the alarm relay contacts.

4-4 Fault Indicator

This indicator is normally off. When lit, it indicates a fault in the system and the Fault circuitry disables the gas alarm circuitry. If Latching gas alarm circuitry has been provided A1 and A2 will remain in the condition that existed before the fault occurred. The Operator should refer to Section 6 for guidance when dealing with a system malfunction.

Note that both the FAULT and READY indicators will be illuminated if the controller is in Calibration mode.

4-5 Calibration Mode

Using the special tool provided (P/N 928-725) the Calibration Door may be moved to the left. The module is then in Calibration Mode and the user has access to the ZERO, SPAN and the A1, A2 level adjustment potentiometers.

In Calibration mode the gas alarm outputs are disabled, although the A1 and A2 indicators remain active as does the Fault circuitry. The yellow FAULT indicator is illuminated steadily.

Note also that the CAL output on Pin 18z of the connector is set to DC in Calibration Mode.

See Sub-section 4-8 for Calibration instructions.

4-6 Master Reset Switch

Modules which are wired for Latching Operation will remain in the active condition even when the gas concentration at the affected sensors drops below the set-point levels. Depressing the momentary-action Master Reset Switch will cancel these alarms, together with a latched over-range condition, if present.

Operation of the switch will have no visible effect if the gas concentration is above the set-point levels.

4-7 Accept Switch

(This section applies only to modules supplied with the Accept/Oscillator Circuitry).

Whenever a gas alarm occurs on a module, the appropriate A1 and A2 alarm indicators flash to indicate an alarm condition. Activation of the Accept switch causes these indicators to remain steadily illuminated until they are either re-flashed by a new alarm or reset by a Master Reset or a falling gas concentration if non-latching alarm circuitry is used.

A flashing Fault indication does not respond to an Accept signal.

4-8 Calibration Instructions

If the system has not previously been calibrated, the following adjustments should be carried out, with the sensor in clean air:

a Rotate the Span potentiometer 22 turns counter-clockwise, or until the end of adjustment is felt. Then rotate this potentiometer about six turns clockwise.
b Rotate the Zero potentiometer so that the meter reads 0% LEL, (assure that the sensor is in clean air). Note: Adjustments to the Zero potentiometer do not affect the Span setting.
c Expose the sensor to the calibration gas, (Details of calibration equipment are included in Section 8). Allow the system sufficient time to stabilize and using the Span potentiometer set the meter to a reading corresponding to the concentration of the test gas. This will generally be approximately 50% LEL.
d Remove the calibration equipment and allow the sensor to stabilize in clean air. Check that the meter returns to 0% LEL. Make minor adjustments to the Zero potentiometer if necessary.
e Repeat the procedure if necessary.

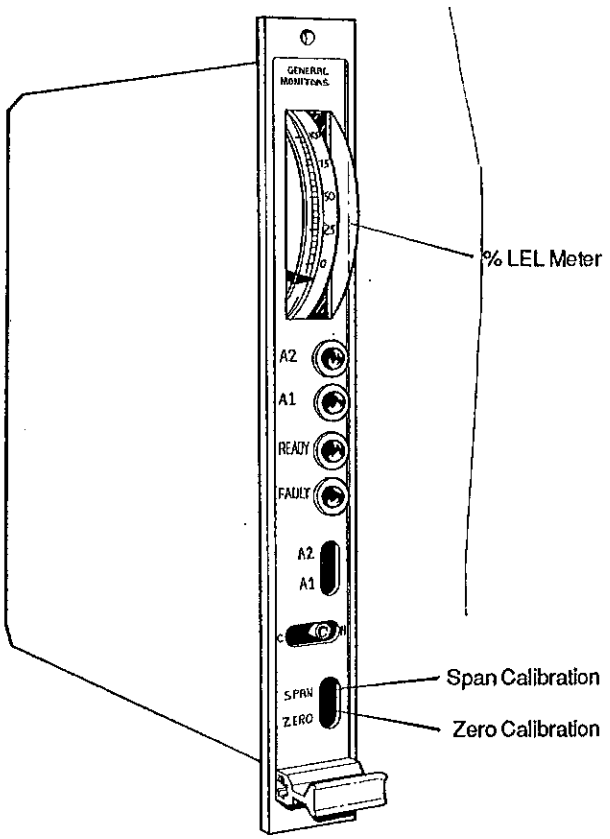

4-9 Pre-Calibrated Systems

Systems which have been pre-calibrated to customers instructions should be checked according to paragraphs b, c and d only.

4-10 Calibration Notes

1 A negative movement of the % LEL meter during calibration indicates that the sensor white and black cables are reversed; correct as necessary.

2 Long sensor cable runs result in a minor increase in the number of clockwise turns required of the Span potentiometer.

3 The number of clockwise turns of the Span potentiometer required to obtain the correct meter reading varies from gas to gas. A steady increase in this number over a short period indicates a loss of sensitivity of the sensor, and reference should be made to Sub-section 3-5, Catalytic Poisons. When the sensor is approaching the end of its useful life there will be a few remaining turns on the 22 turn Span potentiometer, and the sensor should be replaced.

4 Excessive zero drift indicates the presence of a loose or corroded sensor cable connection, or gas.

5 Instability in the meter reading may be due to a number of causes. Check item 4 initially. Ensure that sensor heads located in very windy locations have some degree of protection, by fitting one of the sensor accessories from Section 8 or by adopting some equivalent measure.

Note: These accessories may increase sensor response time. When one is used, it is important that it be left installed during calibration.

Very rapid movements of the meter may be due to noise pick-up in unshielded cables. See Sub-section 3-6.

6 If there is any doubt with regard to a back-ground concentration of gas while calibrating a sensor, the sensor should be purged with clean air or the end may be covered by hand for a minute or two and a clean atmosphere maintained for the duration of the calibration procedure.

Note that any foreign matter, such as oil, dust, paint etc. clogging the dust guards or flame arrestor, will seriously impair the effectiveness of the system. It is therefore recommended that dust guards be cleaned on a regular basis as outlined in Section 5.

4-11 Alarm Settings

A1 Alarm

Rotate the Zero potentiometer to give a meter reading corresponding to the desired A1 alarm set point. Rotate the A1 alarm potentiometer in a clockwise direction if the A1 alarm indicator is already illuminated. Otherwise rotate this potentiometer in a counter-clockwise direction until the A1 alarm indicator just begins to flash.

Note that even if latching gas alarm circuits have been incorporated, these will operate as non-latching circuits in Calibration Mode. This minimizes the risk of inadvertent alarms due to calibration door closure with active alarms.

A2 Alarm

Rotate the Zero potentiometer to give a meter reading corresponding to the desired A2 alarm set-point. Rotate the A2 alarm potentiometer in a clockwise direction if the A2 alarm indicator is already illuminated. Otherwise rotate this potentiometer in a counter-clockwise direction until the A2 alarm indicator just begins to flash.

Rotate the Zero potentiometer in a counter-clockwise direction so that the alarm indicators are extinguished. Note that some hysteresis is present in the alarm trip levels. This is required to prevent relay 'chatter'.

Using the Zero potentiometer re-check the alarm set-points and then set the meter to read 0% LEL using the Zero potentiometer.

The Alarm set-points are now adjusted for this channel. Repeat for all remaining channels.

4-12 Pre-set Adjustments

The following information is included for the benefit of a service engineer. These adjustment have been pre-set at the factory and should only require resetting in the event of a component replacement.

4-13 Set Electronics Supply Voltage to + 15V

Using a digital voltmeter set the electronics supply voltage to 15.00 volts, using potentiometer VR5 Set 15V positive to the anode of D4 and negative to the base of C14, (Refer to 6-7 and 6-8).

4-14 Set Bridge Amplifier Bias Adjustment

Rotate the Span potentiometer VR2 fully counter-clockwise to apply zero differential voltage to the bridge amplifier. Using an accurate measuring instrument, set the analog output current, measured between the AO+ and AO– terminals, to 4.00mA using BIAS potentiometer VR4. If required set meter (M1) to read 0% LEL using mechanical adjusting screw at rear of meter body.

4-15 Set Sensor Current to 300mA DC

With a sensor or dummy load (P/N 10-102) connected to the sensor terminals and an accurate DC milliammeter in series with either the white or the black sensor lead, set the current to read 300mA ± 1 mA using the SC potentiometer VR1. (See page 6-8). Alternatively measure the voltage drop across R34, a1.5 ohm 2.5 watt resistor and adjust for 4

Section 5
Maintenance

	Sub-section
Maintenance	5-1
Storage	5-2

Maintenance

5-1 Maintenance

Once correctly installed, systems require very little maintenance other than Routine Re-calibration. (See Section 4) and periodic inspection.

Sensor heads exposed to the elements may require a little grease on the accessory mounting threads occasionally. The greases used must be free from silicones (refer to Sub-section 3-5 Sensor Poisons) and have a high melting point. Alternatively, PTFE tape may be used.

The removal of particulate matter from sensor accessories may be facilitated by the use of an appropriate halogen-free solvent. Water or ethanol are examples of suitable solvents. The accessories should be thoroughly dried, with compressed air if necessary, before replacing on the sensor body.

General Monitors strongly recommends that the complete system, including all alarm circuitry, be tested at least annually and that the following checks be incorporated.

1 All sensor assemblies for effectiveness of mounting positions so that modifications to plant layout have not affected this.

2 Security of mounting of sensor assemblies.

3 Sensor flame arrestors for clogging due to water, oil, dust or paint.

4 Sensor accessories, if used.

5 Condition and fastening of cables.

6 Connections for tightness and damage.

7 Cooling air filters, where used. Ensure that replacement filters are clean and dry.

8 Operation of complete system on back up supplies, where used, for the full prescribed time.

9 Spare parts stocks (See Section 7)

5-2 Storage

Electronic modules should be stored in a clean dry area and within the temperature range listed in the specification (refer to Section 2).

When prolonged storage is anticipated, modules should be sealed, together with a desiccant, into plastic bags and double wrapped for protection.

Both hydrocarbon and hydrogen sulfide sensors should be stored as above, but note that in the latter case the RED CAP supplied with the sensor should be in position throughout the storage period.

Some degradation of the dielectric present in aluminum electrolytic capacitors will occur during prolonged storage, and after one year the initial leakage currents of these components may be up to one hundred times the leakage measured when new. It is therefore advisable to restore the dielectrics of these components after prolonged unpowered storage using the following method.

Remove the control modules from the chassis. Obtain a current and voltage limited DC power supply and set the output voltage to zero. Set the current limit to 100mA. Connect the supply in the correct polarity across the electrolytic capacitor. Slowly raise the applied voltage to nominal and observe that the current drain stabilizes. Repeat for each module.

Section 6
Basic Fault Finding

	Sub-section
Introduction	
Basic Fault Finding	6-1
Typical Values	6-2
Circuit Description	6-3
Voltage Regulator Circuit	6-4
20 kHz Oscillator	6-5
Comparator	6-6
Power Switch	6-7
Integrator	6-8
Current Limit	6-9
Measuring Bridge	6-10
Bridge Amplifier Circuit	6-11
Alarm Circuits	6-12
Open Collector Outputs	6-13
Accept/Oscillator Circuit	6-14
Timeout Generator	6-15
Under-Range Fault Detector	6-16
Low Voltage & Low Sensor Current Fault Detectors	6-17
Sensor Cable Short Detector	6-18
Optional Sensor Cable Input Protection	6-19
Optional Alarm Relays	6-20
Schematic Diagrams	
Control Module Diagram	

Basic Fault Finding

Included in this Section is a trouble shooting table. The information presented here is designed to cope with the more common faults which appear during system commissioning and operation and which are repairable by a competent operator.

Should the various actions suggested in the table fail to restore normal operation, the affected module should be replaced and returned for repair. A replacement control module will require calibration (Refer Section 4).

If the equipment is under warranty, any repairs performed by persons other than General Monitors authorized personnel may void the warranty. Please read the warranty statement carefully.

6-1 Basic Fault Finding

Symptoms	Possible Causes	Action
No front panel indicators lit and all meters less than 0% LEL	Loss of power to instrument	Check power supply to chassis
Intermittent fault indication on all channels	Low instrument supply voltage	Ensure supply conforms to specification
Continuous fault on all channels	Low instrument supply voltage	Ensure supply conforms to specification
	Analog output loads in excess of specification (R max. 500 ohms)	Connect AO+ and AO– terminals as required
Continuous fault and meter reading below 0% LEL	Analog output load in excess of specification	As above
	Incorrect or open/short circuit sensor or sensor cable	Check resistance of cable with sensor connected is within the limits: Red–Black, less than 50 ohms Red–White, less than 50 ohms Black–White, less than 60 ohms (Max current 300mA DC)
	Span and Zero calibration potentiometers out of adjustment	Recalibrate this channel (See Section 4)
Meter reading less than 0% LEL No fault indication	Module fuse open circuit	Remove module and check fuse.
Meter reading normal, but no LED indication	Timeout period not complete	Wait 60 seconds for ready light

6-2 Typical Values

The following table may be used as a guide to typical parameter values during servicing. Items marked with an asterisk(*) are factory set initially, and should not normally require re-adjustment.

Parameter	Design Value	Approx Range	Units	Circuit Ref.	Set by
Supply voltage	24	22-32	V	B+	External
DC Buss voltage	24	22-32	V	Vcc	External
Low voltage trip	20	±5%	V	IC 1-3	–
Low voltage hysteresis	1.6	–	V	R60	–
15 volt regulator O/P	15.00	13-17	V	IC4	VR5*
Sensor current	300	250-350	mA	IC3-1	VR1*
Sensor current limit	430	–	mA	Q10	–
Low I SENS Trip	200	±5%	mA	IC1-4	–
Low I SENS hysteresis	55	–	mA	R67	–
Under-range trip	1.88	±5%	mA	IC 3-2	–
Under-range hysteresis	1.34	–	mA	R75	–
AO Span	16	–	mA	IC2	–
AO Live Zero	4	0.25 – 10	mA	IC 2	VR4*
AO current limit	27	±10%	mA	Q4	–
Alarm set-point range	0-100% LEL	–10– +105%	% LEL	IC3-3 IC3-4	VR6 VR7
Bridge amplifier offset	0 @ 77°F	–	mV	IC2	VR4*
Timeout period	60	±10%	Seconds	IC7	–
LED oscillator frequency	8	±20%	Hz	IC6	–
P–P voltage across C1	1.36	–	V.a.c.	C1	–
Average voltage across C1	7.5	±2%	V.d.c.	C1	–
Bridge ripple voltage	2	–	mV RMS	C2, C3	–
Bridge oscillator frequency	20	±10%	kHz	IC1-1	–
Max transient energy	7	–	J	Mov 1,2,3 & 4	–
Supply interruption (max)	20	–	mS	–	–

6-3 Circuit Description - 4801 Control Module

Power Supply

The 24V (nominal) direct current supply appears on Pins 20z and 20d (B+) and on Pins 22z and 22d (OV). Diode D30 prevents damage to the equipment should the polarity of the supply be inadvertently reversed.

Fuse FS1 (5 x 20mm) is rated 1A Characteristic 'T' and protects both the electronics and sensor. Excessive voltage transients appearing on the supply are absorbed by the varistor MOV 1. Capacitors C14 and C4 attenuate low and high frequency noise on the Vcc supply.

6-4 Voltage Regulator Circuit

IC4 integrated circuit is a monolithic voltage regulator which operates in the linear mode and is internally protected against both current and power overload. Diodes D4 and D5 provide reverse voltage protection and capacitors C4, C5 and C6 improve stability and transient response. An internal temperature compensated reference voltage is developed across diode D5 and this is used in conjunction with potentiometer VR5 to generate the 15V supply.

6-5 20 kHz Oscillator

Comparator IC-1 and its associated circuitry form a relaxation oscillator whose free-running frequency is 20 kHz. When power is first applied, capacitor C1 is discharged. Hence the open-collector output (Pin 13) is effectively an open circuit, and C1 charges from +15V with a time constant of T1 = C1 (R2 + R5) seconds. The voltage across C1 will continue to rise until it equals the voltage on Pin 11 of IC1-1 which is a 7V5 plus a small increment (ΔV) due to regenerative feedback via R3. At this point the output (Pin 13) switches to approximately OV, bringing the voltage on Pin 11 to 7V5 minus ΔV, and C1 is discharged with a time constant of T2 = C1 (R5) seconds.

Thereafter the cycle continues giving an approximately triangular voltage waveform of peak amplitude 2 ΔV (1V 36) across C1 at a repetition frequency of 20 kHz.

6-6 Comparator

Comparator IC1-2 compares the level of the triangular voltage waveform from the 20 kHz oscillator to a direct voltage fed back from the Integrator IC3-1. The output of this comparator (Pin 14) is thus a rectangular waveform whose duty cycle is dependent on the integrator output. In normal operation the comparator output will have a repetition frequency of 20kHz, a minimum voltage level of OV and a maximum voltage level of approximately 1V5, the base emitter saturation voltage of Darlington transistor Q1.

6-7 Power Switch

The Darlington transistor Q1 switches the power transistor Q2 between cut-off and saturation in response to the output waveform of the comparator IC1-2. Hence the input waveform to the filter formed by L1, C2 and C3 has a duty cycle similar to that present on Pin 14 of IC1-2 but an amplitude approximately equal to Vcc. 'Catch' diode D1 provides a current return path from the load during the 'off' time of transistor Q2. The bridge is thus energized with direct current at high power efficiency.

6-8 Integrator

The gas sensor which forms one leg of the bridge circuit is designed to operate with a direct current of 300 mA. Resistor R34 (IR5) senses the level of sensor current and the resulting voltage generated across this resistor is compared to a present voltage, set by potentiometer VR1 ('SC') within the operational amplifier IC3-1. Overall system stability is maintained by the integrating capacitor C8.

6-9 Current Limit

Transistor Q10 monitors the current through the current sense resistor R34 and limits this to approximately 430mA by diverting the drive from IC1-2 going to the power switch.

6-10 Measuring Bridge

The gas sensor, which is mounted in the hazardous area and is connected to the controller using the techniques presented in the Installation Instructions, contains two elements. One is an active element, connected between White and Red and its resistance increases when a combustible gas is encountered. The other

element connected between Red and Black is a passive element which does not respond to a combustible gas but is employed to cancel the effects of interfering ambient conditions on the active element. These two elements in series with the current sense resistor R34, form one leg of the measuring bridge and resistors R35, R36 and potentiometer VR3 (Zero) form the other leg.

Initial bridge imbalance is removed using VR3. Resistor R33 is used to generate an under-range condition in the event of a break occurring in the sensor Red lead. The bridge output voltage is developed across potentiometer VR2 'Span' and an appropriate fraction of this voltage is tapped off to form the differential input voltage of the fixed gain bridge amplifier circuit.

6-11 Bridge Amplifier Circuit

The bridge amplifier circuit, consists of precision amplifier IC2, Darlington transistor Q3 and associated components, has a fixed transconductance of approximately 816 mA per volt. The potential divider formed by resistors R9 and R10 results in an analog output current of 4mA with the bridge in balance (zero differential input voltage). Full scale deflection of 20 mA analog output current occurs with a differential input voltage of approximately 24 mV. Thus the analog output current generates a voltage across the total emitter resistance of transistor Q3 (R43 + R44) in the range OV25 (for 0% LEL gas) to 1V25 (for 100% LEL gas).

Transistor Q4 serves a dual role. It first detects an Over-range condition (110% LEL and above) and switches transistor Q5 on. This latches IC2 into a high-gas condition due to regenerative feedback through resistor R47 and diode D18. Transistor Q4 then limits the analog current to approximately 27 mA by diverting the base current of transistor Q3 through diode D17.

This Over-range latch may be manually reset by shorting the MR input to DC ground momentarily.

Potentiometer VR4 (Bias) is used to trim out initial amplifier offsets and its setting should not normally be interfered with. Diodes D15 and D16 protect the amplifier IC2 from excessive differential input voltage which might arise in a fault condition. Diode D2 prevents damage to amplifier IC due to excessive common mode input voltage which might arise due to a fault in the sensor cabling. Note that the analog output terminals (24d and 24z) should be jumpered if not externally connected to a load (500 ohms max).

6-12 Alarm Circuits

The A1 and A2 gas alarm circuits are identical, so that only the A2 circuit need be described.

Operational amplifier IC3-3 is configured as a comparator with approximately 5% hysteresis due to regenerative feed-back through resistor R20.

In normal operation the voltage present on the emitter of transistor Q3, representing gas concentration, is compared with the user-preset voltage on the slider of potentiometer VR6 A2 representing the A2 alarm set-point.

When the comparator set-point voltage is exceeded, the comparator output on IC3-3 (Pin 1) switches High and other conditions permitting, drives the Darlington output inverters IC8-1, -2, -3 Low.

Alarm latching is achieved by regenerative feed-back through resistor R21 and diode D8. Thus when IC8-1 Pin 11 switches Low, transistor Q11 is switched On and the logic High condition on the cathode of diode D6 is reinforced. Capacitor C23 introduces a delay so as to prevent spurious triggering.

The application of a Master Reset cancels the A2 alarm (via diode D7) only if the alarm comparator output is Low. Diode D8 is removed if non-latching operation is required.

An open collector alarm output is provided on connector Pin 14z TA2. This may optionally be normally de-energized, via programming link P2-0 or normally energized is P2-1 is used.

Note that both IC8-1 and IC8-2 inverters are inhibited in Cal mode, due to the diversion of drive current through diode D9.

The red LED alarm indicator (LED 1) is driven by inverter IC8-3 and is illuminated whenever comparator IC3-3 switches on. Note that this output is routed to connector Pin 16z LA2 and is present even in CAL mode.

The Alarm circuitry is inhibited during Timeout due to a logic high on the anode of diode D4, which forces the comparator into an off condition for the sixty second timeout interval at start-up or following the clearing of a Fault condition.

6-13 Open-Collector Outputs

The provision of true open-collector low-offset transistor outputs is incompatible, in practical terms, with full voltage, current and power limiting of such outputs. The design of this Control Module is to provide all user accessible transistor outputs from one integrated circuit (IC8) containing seven Darlington circuits. This device is mounted in a socket to allow for convenient field replacement and may be regarded as a semiconductor fuse. The device is very conservatively rated and should provide the same high level of reliability that exists elsewhere in the Control Module circuitry.

The outputs are shown in the following table:

Alarm	Main Output	Auxiliary Output
A2	TA2 = Pin 14z	LA2 = Pin 16z
A1	TA1 = Pin 12z	LA1 = Pin 14d
Fault	TF = Pin 12d	

The Main outputs TA2, TA1 and TF are true open collector outputs, unless relays are fitted, in which case they are used to drive the relay coils in parallel with any external load. The TA2 and TA1 outputs are inhibited by placing the module in Calibration Mode but the TF output is not.

The Auxiliary outputs LA2 and LA1 drive the A2 and A1 LED indicators together with any external load.

All open-collector outputs are provided with isolation diodes to allow for the commoning of these outputs.

The LA2 and LA1 outputs have two possible modes of operation:

1 - Without Accept/Oscillator

In this case the LA2 and LA1 outputs operate the same as the TA2 and TA1 outputs, with the exception that they are not inhibited in Calibration Mode.

2 - With Accept/Oscillator

In this case the LA2 and LA1 outputs have three possible conditions. These are:

* Off in the absence of a gas alarm
* Flashing at the frequency of the Oscillator in a gas alarm condition prior to the receipt of an Accept signal or following a new gas alarm.
* On steadily in the presence of a gas alarm condition, following the receipt of an Accept signal.

An open-collector output is also provided to indicate the presence of an unaccepted alarm. This output goes low on detecting a new alarm and will go high when the alarm is accepted. This is only available when the Accept/ Oscillator option is ordered.

6-14 Accept/Oscillator Circuit

This optional circuit is used to provide an alarm reflash capability.

Integrated circuit IC6 and associated components is configured as an astable multi-vibrator whose output (Pin 3) drives the Fault indicator directly and modulates the gas alarm indicators via diodes D10 and D24.

The oscillator is normally in a quiescent condition (Pin 3 high) and is activated by a High on either IC5 (Pin 3) or IC3-2 (Pin 14).

A High on IC3-2 (Pin 14) occurs in a Fault condition, transistor Q8 is switched On and the Fault indicator (LED 4) flashes at the frequency of the IC6 oscillator.

A High on IC5 (Pin 3) is caused by a gas alarm. In this case the VTH line goes Low via diode D12 or diode D25 and a negative-going pulse is received on IC5 (Pin 2). This pulse sets the IC5 bistable latch, causing the output (Pin 3) to go High. It will remain in this condition until reset by a High level on Pin 6, due to either the receipt of an Accept signal on the connector (Pin 18d) or a High level on the VTH line due to the resetting of the gas alarm circuitry. In the latter case, this may be due to either the automatic resetting of non-latching alarm circuits or the application of a Master Reset signal for latching circuits.

When the output of IC5 (Pin 3) goes high, the MSA06 transistor is switched on resulting in an open-collector UA signal.

6-15 Timeout Generator

The timeout generator circuit, consisting of integrated timer IC7 and associated components is designed to provide a delay of one minute after either application of power or a Fault indication, during which operation of the alarm circuits is disabled. During the timeout period, capacitor C18 charges from +15V through resistor R85. When the capacitor voltage equals 10V, the output of IC7 (Pin 3) changes to OV from + 15V, the green LED (LED 3) is switched on and the alarms are enabled.

6-16 Under-range Fault Detector

Should the analog output current drop from its normal 0% LEL level of 4mA to less and 2mA, the output of the operational amplifier IC3-2 switches to a logic High and transistor Q8 is switched On. The normally active Fault output on connector Pin 12d TF is de-energized, the yellow Fault LED (LED 4) is illuminated and the T/O signal of the Timeout Generator (IC7) is switched High to disable the alarms via diodes D44 and D45. The green LED is switched Off at this time.

6-17 Low Voltage and Low Sensor Current Fault Detectors

IC1-3 and IC1-4 together with their associated components, form the low power supply voltage and low sensor current detectors. The former trips when the power supply voltage level drops below 20V while the latter trips at approximately 200mA of sensor current. In either event, transistor Q3 is switched off, giving zero analog output current. This condition is then detected by the under-range malfunction detector and the sequence of events continues as before (Sub-section 6-14)

6-18 Sensor Cable Short Detector

The fault detection circuitry previously described monitors all sensor and sensor cable short and open circuit conditions except one – a short between the Red and Black sensor cables. This condition is detected by transistor Q9, which drives transistor Q6 when active. This in turn causes the analog output current to fall to zero, leading to an under-range fault condition as described above.

6-19 Optional Sensor Cable Input Protection

In the case of installations subject to damage due to frequent violent thunderstorms, Metal Oxide Varistors (Mov 2, 3 & 4) may be specified for inclusion on the Control Module. These devices are capable of dissipating transient over-voltages up to a maximum energy of 7 Joules per component.

6-20 Optional Alarm Relays

Where relay outputs are required, relays K1, K2 and K3 may be specified. Note that the open-collector type outputs TA2, TA1 and TF are still available for customer use but at a reduced maximum current capability.

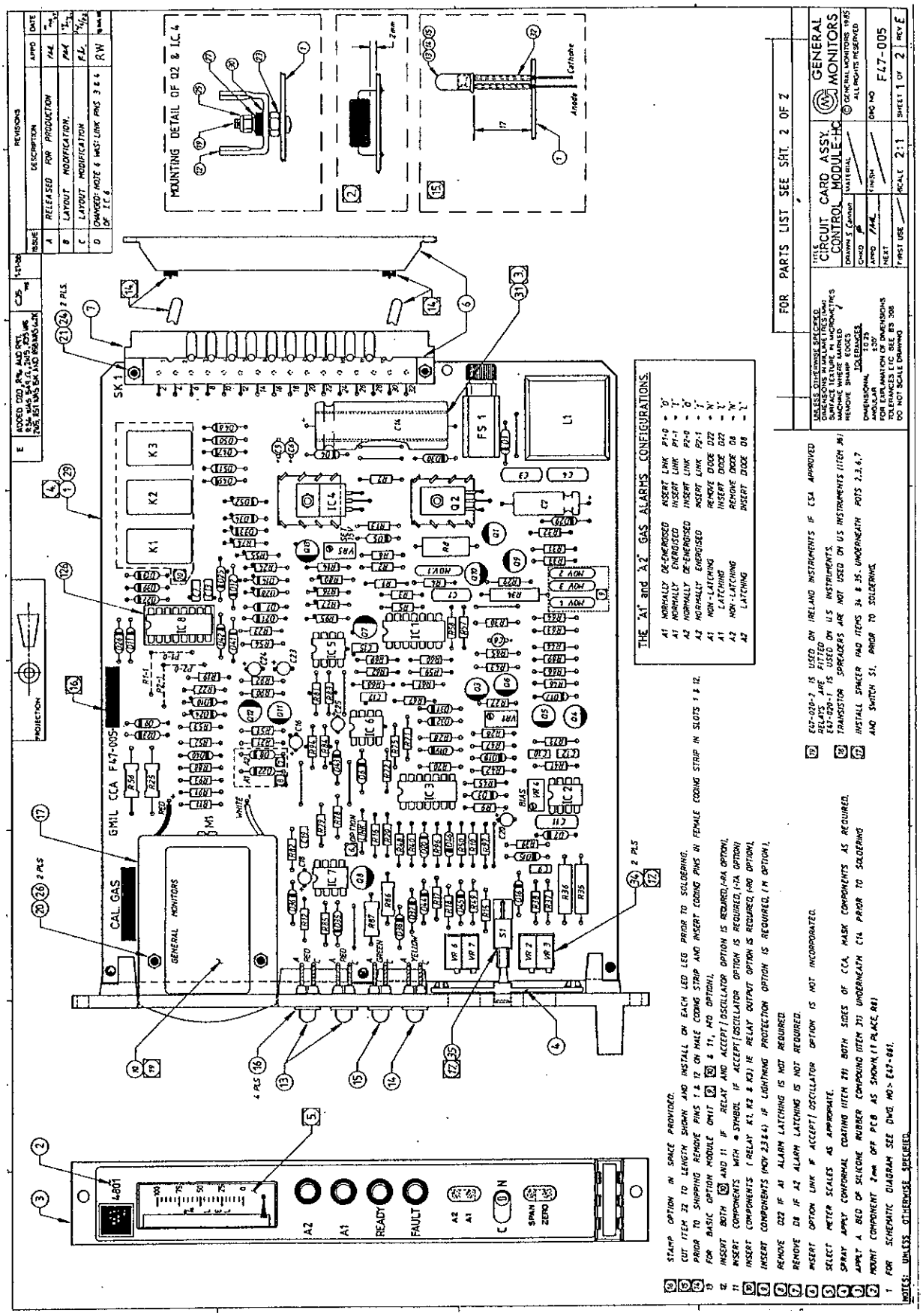
MOUNTING DETAIL OF Q2 & I.C.4
THE 'A1' and 'A2' GAS ALARMS CONFIGURATIONS.
FOR PARTS LIST SEE SHT. 2 OF 2
CIRCUIT CARD ASSY. CONTROL MODULE-HC
GENERAL MONITORS
F47-005
CAL. GAS
GMIL CCA F47-005
GENERAL MONITORS
4801
A2
A1
READY
FAULT
SPAN
ZERO
NOTES: UNLESS OTHERWISE SPECIFIED.

Section 7
Spare Parts

Start-up Spares Kit
Two Year Operational Spares Kit

Spare Parts

Spare Parts Ordering Procedure

When ordering Spare Parts, or requiring current prices, please contact your nearest General Monitors Representative or General Monitors direct giving the following information.

Part number of spare part required
Description of spare part required
Quantity required

Recommended Spare Parts

Item No.	Part No.	Description	Qty.
1	12571	Screw	10
2	951-212	Fuse 1A	16

Two year operational Spare Parts Model 4801

Item No.	Part No.	Description	Qty
1	12571	Screw	10
2	951-212	Fuse 1A	5

Section 8
Accessory Equipment

	Sub-section
Dust guard assembly	8-1
Sintered stainless steel dust guard	8-2
Splash guard	8-3
Sensor flow chamber	8-4
Duct mounting plate	8-5
Portable Calibration Chamber	8-6
Portable Purge Calibrator	8-7
Test Gas Applicator - TGA-1	8-8

Accessory Equipment

8-1 Dust Guard Assembly (P/N 10110)

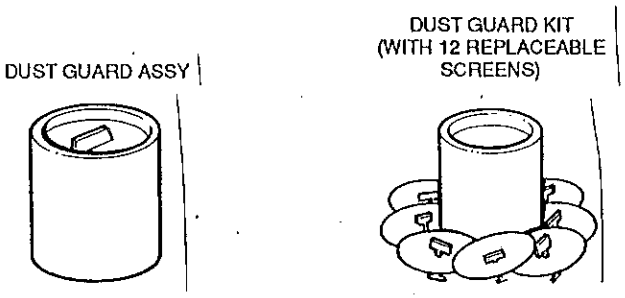

The dust guard is a simple, threaded (1 3/16-18 UNEF 2B) stainless steel (type 303) cylinder with a wire screen at one end. It is easily unscrewed for cleaning and/or replacement of the disposable screen. The screen material is stainless steel (type 316) with a nominal 40 micron mesh. This General Monitors accessory is specially designed to prevent dust and particulate matter from reaching the sensor flame arrestor. Such debris can plug the screen and limit the amount of gas reaching the active surface of the sensor, thereby creating a potentially hazardous situation. When the dust guard is installed, this problem is minimized and sensor response is virtually unchanged. The dust guard is also available in a kit (P/N 10044) with twelve replaceable screens. It can be used as an effective windscreen, and is recommended for corrosive, windy or high temperature environments. A typical application would be in the area surrounding a drying oven.

8-2 Sintered Stainless Steel Dust Guard (P/N 1800822-1)

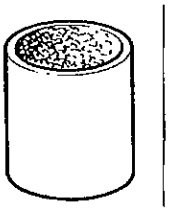

The construction of this accessory is similar to P/N 10110, but with 3mm (1/8") thick sintered stainless steel (type 316) disc at one end. The body material is type 303 stainless steel with an internal 3/16 UNEF 2B thread for installation on the sensor body. This dust guard provides protection from fine particulates and windy environments. It should be used only in dry locations because of the tendency of the sintered disc to absorb water which would then act as a gas diffusion barrier until the disc dried out again.

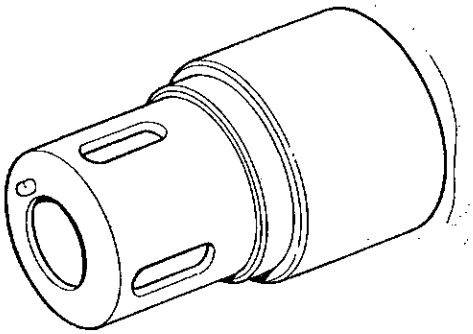

8-3 Splash Guard (P/N 10395-1)

The Splash Guard is a rugged thermoplastic polyester (Valox) plastic cylinder which screws into place over the sensor body. It contains a series of internal baffles which are designed to deflect water spray away from the sensor flame arrestor. The splash guard is recommended for areas where heavy rain or frequent equipment hosedowns occur. It also makes an effective barrier against high winds.

8-4 Sensor Flow Chamber (P/N 10066)

The General Monitors Sensor Flow Chamber is constructed of 2024T aluminum (optional stainless steel type 316, P/N 10066-SS). The chamber has an internal thread 1 3/16-18 UNEF 2B, into which a sensor may be screwed, and two threaded ports (1/8-27 NPT L1 NOM) which accept 1/4 " tube fittings (P/N 925-029). The chamber is designed for insertion into a sampling system and the recommended flow rate is 0.47 liters per minute (1cu. ft/hr.).

8-5 Duct Mounting Plate (P/N 10041)

The Duct Mounting Plate is a rectangular plate measuring 73 x 116mm (2.88" x 4.56") containing four captive mounting screws (6-32 UNC), and a Neoprene O-ring seal. The sensor is mounted through a hole in the center of the plate and secured with an O-ring gasket and locknut. The assembly is ideally suited to the monitoring of ducted air for living quarters in large offshore modules. Note that the sensor should be mounted pointing **down**, protected for excessive air velocity and in a position to facilitate recalibration.

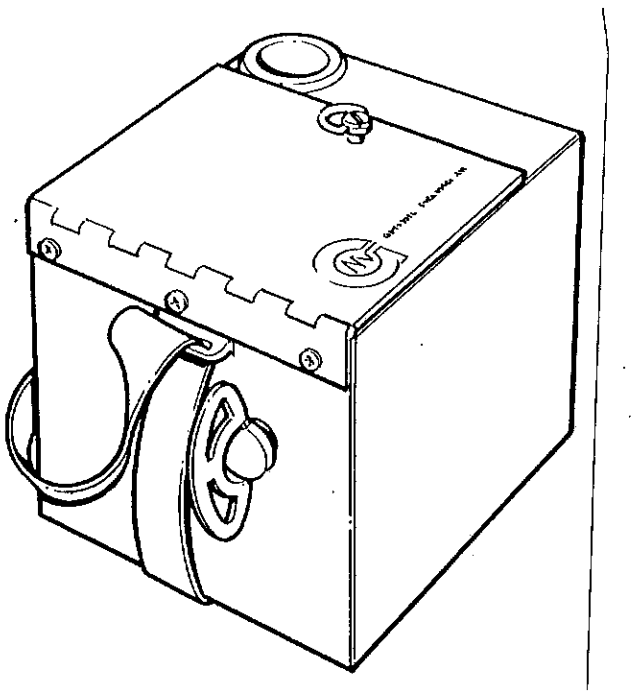

8-6 Portable Calibration Chamber Model 1400200

The General Monitors Portable Calibration Chamber is a practical method for field calibration of combustible gas detection instruments. It is recommended for use with most volatile liquids. For calibrating to Butadiene, Butane, Ethane, Hydrogen, Methane and Propanol we recommend the use of our Portable Purge Calibrator Part No. 1400150.

The Portable Calibration Chamber contains a 3 liter (3000ml) sample chamber with a spring driven mixing fan. A porthole allows the sensor to be inserted into the chamber for calibration. A syringe is included for accurate measurement of the volatile test liquid.

Each General Monitors sensor (with controller) is initially calibrated at the factory to a specified combustible gas or vapor. This provides the greatest accuracy in service. A hydrocarbon sensor calibrated for 50% LEL acetone, for example, will detect all hydrocarbons and most combustible solvent vapors. It will **accurately read ONLY the per cent LEL of Acetone.** Indicated measure of volatile liquids reflect 50% LEL at 25°C temperature and standard pressure when used with the 3 liter Portable Calibration Chamber (P/N 1400200)

Acetaldehyde	C_2H_4O	135µl
Acetone	C_3H_6O	115µl
Amyl Acetate	$C_7H_{14}O_2$	97µl
Amylamine	$C_5H_{13}N$	147µl
Butyl Acetate	$C_6H_{12}O_2$	134µl
Butyl Alcohol	$C_4H_{10}O$	79µl
Butyl Cellosolve	$C_6H_{14}O_2$	88µl
Cyclohexane	C_6H_{12}	84µl
Diethyl Benzene	$C_{10}H_{14}$	96µl
Diisobutyl Ketone	$C_9H_{18}O$	87µl
Ether, Ethyl	$C_4H_{10}O$	123µl
Ethanol (Ethyl Alcohol	C_2H_6O	116µl
Ethyl Acetate	$C_4H_8O_2$	131µl
Ethylbenzene	C_8H_{10}	72µl
Gasoline 100 Oct.	C_7H_{16}	107µl
Heptane, Normal	C_7H_{16}	92µl
Isopropyl Ether	$C_6H_{14}O$	125µl
JP.4 Jet Fuel		126µl
MEK	C_4H_8O	99µl
Methanol	CH_3OH	164µl
Naptha (Petr. Ether)		93µl
Propanal	C_3H_6O	128µl
2-Propanal	C_3H_8O	92µl
Propyl Acetate	$C_5H_{10}O_2$	138µl
Propylamine	C_3H_9N	103µl
Propylbenzene	C_9H_{12}	65µl
Styrene	C_8H_8	78µl
Tetrahydrofuran	C_4H_8O	98µl
Tetrahydrofurfuryl alcohol	$C_5H_{10}O_2$	85µl
Toluene	C_7H_8	75µl
Triethylamine	$C_6H_{15}N$	106µl
Vinyl Ethyl Ether	C_4H_8O	94µl
Xylene	C_8H_{10}	79µl

Operating Instructions

TOP VIEW

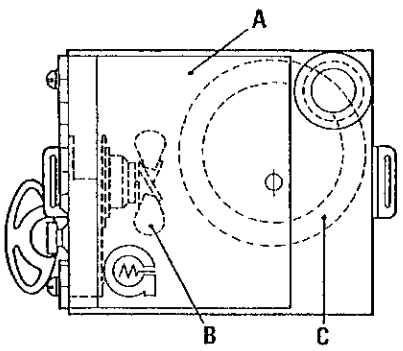

SIDE VIEW

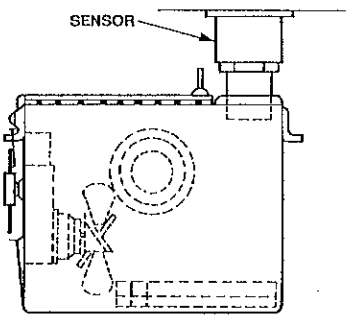

A - Pre-calibration Check

1 Open sample chamber lid (a) and assure freedom of movement of mixing fan blade (b). Wind mixing fan motor several turns and let fan 'run down' with chamber lid open. This is required to purge the air in the sample chamber and remove any concentration of residual gas/vapors.

2 Place the glass 'dish' (c) in the allocated space within the sample chamber (close to the porthole where the sensor is to be inserted). Note: The total available chamber volume of 3 liters is computed with the glass dish in the chamber. The dish must be in place for all calibrations.

B - Calibration of General Monitors Hydrocarbon Sensors to Any Volatile Liquid.

1 Controller and Sensor have to be in the operating mode. Allow two minutes minimum warm-up of sensor. Adjust zero potentiometer on controller so that it reads zero. Be sure sensor is in clean air. NOTE: If a channel is not in the calibration mode, the application of calibration gas will activate any alarms set at or below the calibration gas concentration.

2 Place the channel control card in the Calibrate Mode by opening the Calibration Door.

3 Open door 'A'

4 Place a piece of filter or other small absorbent paper on the glass dish and anchor with a small weight. (The use of this paper will speed the evaporation of the liquid).

5 Fill syringe with the appropriate amount of calibration liquid. (A small syringe is provided for accurate liquid measurement). *

6 Move the calibration chamber to the sensor and insert the sensor through the round porthole into the sample chamber.

7 Open the door and eject the liquid from the syringe onto the absorbent paper in the chamber. Immediately close the door to prevent any of the vapors from escaping. This is an important part of the procedure to ensure an accurate calibration.

8 Wind the mixing fan fully. This will assure at least five minutes of uninterrupted mixing fan operation.

9 Allow about one minute (or as required) for liquid to evaporate and mix. When display on controller has increased and is stable, adjust controller span potentiometer until display reading corresponds to gas concentration in the chamber. Calibration is usually at 50% LEL but volume of injected liquid may be adjusted to establish other concentrations (% LEL) in the chamber.

To calculate the sample required, take the basic 50% LEL sample figure from the listing on the previous page. Multiply the 50% LEL figure by the desired % LEL and divide by 50:

For example:

Acetone @ 50% LEL = 115µl

$$\frac{\text{Acetone @ 10\% LEL} = 115\mu l \times 10}{50} = 23\mu l$$

Calibration above 50% LEL is not recommended.

11 Remove sensor from calibration chamber and open chamber door 'A' to ventilate the chamber. Remove the material (paper etc.) used in Step No. 3 and discard.

12 Check controller zero when sensor has returned to clean air. Repeat Steps No. 2 through No. 9 for maximum accuracy in calibration.

C - After Calibration is complete, re-check Controller Zero.

Do not re-adjust 'span' potentiometer.

Your gas detection system is now calibrated to the selected liquid.

Return channel to the normal (N) operating position by closing the calibration door.

ORDERING INFORMATION
Complete Unit:
Portable Calibration Chamber P/N 1400200

* Specify the desired Syringe:

250µl supplied if not specified

10µl	P/N 928716
50µl	P/N 928717
250µl	P/N 928715

Replacement parts:

Glass dish	P/N 928700
Motor Assembly	P/N 1400204
Carrying strap	P/N 914035
Fan blade	P/N 1400207
Grommet	P/N 1400206

8-7 Portable Purge Calibrator Model 1400150

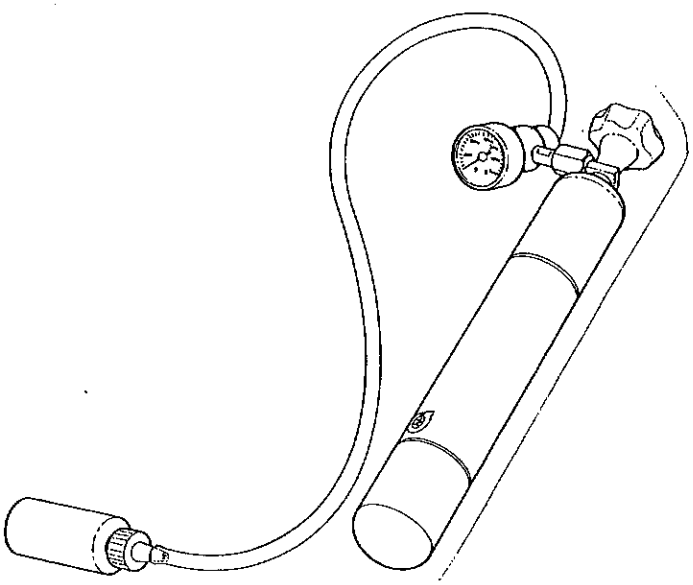

General Monitors Portable Purge Calibrator is a compact, accurate and safe field calibration system.

No hazardous gas to handle -
Calibrator is filled with a Gas/Air mixture below the Lower Explosion Level. (Standard mixture is 50% LEL).

Known Gas/Air Mixture -
Eliminate the chance of error in field calibration.

Hose and Cup Adapter -
Permits you to calibrate your sensors without dismounting them.

Available Gases -
Premixed calibration gases at approximately 50% LEL.

Butadiene	C_4H_6
Butane	C_4H_{10}
Ethane	C_2H_6
Hydrogen	H_2
Methane	CH_4
Propane	C_3H_8

Maximum Permissible Pressure in the lecture bottle is 1200 psia

Spare Gas Bottles -
Order Part No. 1400155 and specify gas. Bottles for methane and hydrogen may be returned for refilling.

Available from Stock -
50% LEL mixtures of Methane/Air or Hydrogen/Air are available from stock. Other mixtures listed will be prepared on special order.

Operating Instructions

NOTE: If a channel is not in the calibration mode, the application of calibration gas will activate any alarms set at or below the calibration gas concentration.

Place the channel in the calibration mode (see Section 4-5).

1 Execute the pre-calibration check-out procedure for your Combustible Gas Controller as outlined in Section 4-8, c, d & e.
2 Adjust the zero potentiometer (on the Combustible Gas Controller) until the LEL display reads zero. (This must be done in a 'clean' atmosphere - no combustible gas present).
3 Turn the main valve on the lecture bottle counter clockwise until pressure is indicated on the gauge. Gas flow is now controlled by the low pressure, lever-operated valve. Turn the gas 'on'.
4 Place the plastic cup over the outer sensor guard. (Two cup sizes are supplied; cup should fit closely but not seal).

CAUTION: DO NOT ADJUST THE REGULATOR, AS IT IS FACTORY ADJUSTED FOR OPTIMUM FLOW.

5 Wait momentarily for the Controller and Sensor circuits to stabilize. (Controller display should move upscale and approach a reading of 50% LEL). If necessary, adjust the Controller 'span' potentiometer until the Controller LEL display reading corresponds to LEL mixture (in %) indicated on the Portable Purge Calibrator. Standard concentration is approximately 50% LEL.
6 Release the lever-operated valve, stopping the flow of gas through the plastic tube: Remove the cup from the sensor. Re-check LEL display when it has re-stabilized (reading should return to zero).
7 Turn the main valve clockwise to turn the gas off.
8 Your Combustible gas detection system (Controller and Sensor) is now calibrated to the LEL mixture of the Portable Purge Calibrator.
9 Return the channel to the normal operating mode.

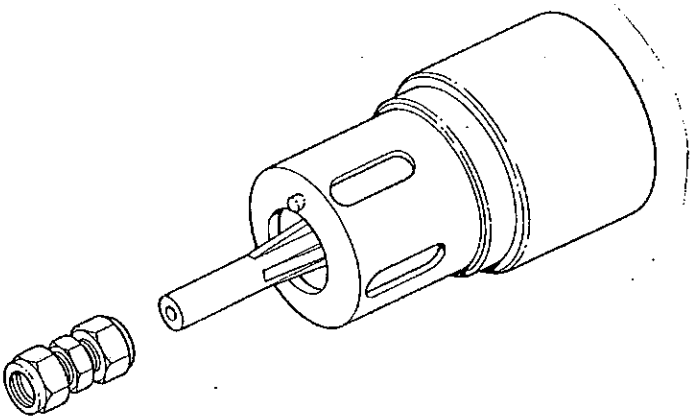

8-8 Remote Test Gas Applicator - TGA-1

The Remote Test Gas Applicator, (TGA-1) is designed to be permanently installed on a combustible gas sensor. The TGA-1 provides protection from outside elements, (such as splashing water) and it allows the user to apply test gas from a remote source.

Special Instructions

1 For best results when using the TGA-1, test gas readings should not be accepted unless the surrounding air is essentially motionless. If used outdoors, wind may considerably reduce gas concentration. With wind speeds up to 13mph, the accuracy of the test gas and/or calibration will be within approximately ± 20% of the applied gas.

2 The flow rate of the applied gas should be set at approximately 400 ml/minute.

3 Allow adequate time for the air to be displaced from any interconnecting pipe before noting test gas readings.

4 Calibration should be checked periodically using portable purge calibrator, part number 1400150.

Part Numbers

10460-1	TGA-1	1/4" Brass fitting
10460-2	TGA-1	1/4" Stainless steel fitting
10460-3	TGA-1	6mm Stainless steel fitting