The Safety Company

梅思安(中国)安全设备有限公司
MSA(CHINA) SAFETY EQUIPMENT CO., LTD

DF-8500 气体探测器

DF-8500 Gas Detector

用户手册
User Manual

P/N:10203355 Rev.2
编制日期Date:2021/03/16

目　　录

1 安全规则

1.1 正确使用

DF-8500固定式气体探测器，用于检测有毒或氧气，适合任何室外和室内用途，如石油化工与天然气行业、煤化工行业、制药行业、化工行业等。探测器的信号可结合梅思安控制器（如SUPREMA，Gasgard XL，9010/9020，8020，CF10/CF20）一起使用。

使用本产品时必须阅读和遵守本操作手册，特别是安全说明、使用信息以及产品操作部分，必须仔细阅读和切实遵守。此外还需考虑用户所在国的国家安全使用法规。

！危 险

- 本产品保护生命健康，使用、维护或保养不当可能影响设备功能，从而严重危及使用者人身安全。
- 使用本产品前必须验证产品的可操作性。如果产品未通过功能测试，或产品损坏，或某一部件的保养维修没有完成，或没有使用梅思安原厂的备件，则产品不能使用。

代替使用或使用超出本规范范围则属于违规操作，并且未经授权的擅自改装以及由梅思安或授权人以外进行的调试工作也属于违规操作。

1.2 责任

梅思安对产品不当使用或用于非既定用途所导致后果不负责，每个操作人员必须自行负责产品的选择和使用。

如产品的使用、维护或保养不遵循本手册说明，则梅思安提供的产品责任声明和质量保证等承诺无效。

1.3 需采取的安全预防措施

必须绝对遵守如下安全说明，只有这样才能保证操作人员的安全健康以及仪表的正常功能。

- 本手册中描述的设备必须严格按照其标签、警告、指示说明和规定限制范围安装、操作和保养。
- 本设备设计用于探测空气中的气体或蒸气。
- 防止设备过度振动，严禁将传感器安装在阳光直射处，否则会导致传感器过热。
- 设备安装时必须确保传感器进口朝下，避免颗粒或液体堵塞气体进口。
- 电化学传感器是一个密封部件，内含腐蚀性电解液。如传感器出现泄漏，则必须立即将它从仪表上拆除，并妥善处理，要求谨慎操作，防止电解液接触皮肤、衣服或电路，否则可能导致人员烧伤或设备损坏。
- 可以用浓度已知的气体检查设备，这是唯一保证设备整体操作正确的方法，所以标定检查必须是系统常规检测的一部分。
- 与其他此型式的设备一样，曝露在高浓度或长期曝露在测试气氛所含的某些化合物下会污染传感器。在设备可能曝露接触这些物质的环境下，必须经常校准设备，确保操作可靠，显示准确。
- 设备不得油漆。如果设备位置处有油漆作业，则必须谨慎操作，确保油漆不会积存在气体传感器进口内的隔爆片上，这些油漆积存物会干扰气体扩散过程。
- 按本手册规定程序进行保养时，只能使用梅思安原厂的替换部件。如不这样操作，可能严重损害仪表性能。设备维修或改装如超出保养范围，或由非梅思安授权维修人员执行维修或改装，则会导致产品无法达到设计性能。
- 设备设计用于大气条件下的危险区域。
- 传感器上积存过多灰尘会延长设备的响应时间，因此必须经常定期检查灰尘积存情况。

1.4 梅思安固定仪表质保

按照梅思安公司的要求，正确地安装、调试和使用本产品，梅思安公司将提供本产品在质保期的相关责任。梅思安公司不承担以下因素引起的产品质保责任：

1. 由非梅思安公司人员或非经梅思安公司授权人员进行的标定、调试和维护等；

2. 由于产品不正确地放置、使用、改装；

未经梅思安公司授权，任何人员对本产品所做的确认、陈述或保证，将视为无效条款。

梅思安公司对非自产部件或者附件不承担质保责任；梅思安公司保留将这些部件或者附件制造商提供的质保责任移交给相关采购方的权利。

本产品标准质保期为：合同开票之日起12个月。

2 描 述

2.1 装置识别

图1 DF-8500 气体探测器

2.2 概述

设备由工厂标定好，交付即可安装，安装好后需要进行首次标定。当探测器投入正常运行后，梅思安推荐每三个月进行一次标定。

设备包括：

- 一个气体传感器
- 一个四位数显示的15段的LED显示器
- 四个用于显示当前探测器状态的发光二极管

图2 DF-8500 探测器各部分说明

1. 电源接线端口
2. 4位15段LED显示器
3. 红色LED指示（低报）
4. 红色LED指示（高报）
5. 遥控信号接收头
6. 黄色LED指示（故障）
7. 绿色LED指示（正常)
8. 传感器
9. 传感器锁紧装置
10. 铭牌
11. 盖子锁紧装置
12. 防雨罩

3 安 装

设备必须安装在预计会出现气体泄漏的地方。安装位置根据气体密度确定，如果探测气体的密度小于空气，则可以将设备安装在室内天花板下方；如果探测气体的密度大于空气，则可以将设备安装在靠近地面的地方。此外还必须考虑气流对设备探测气体能力的影响。安装还必须保证设备正面的显示屏清晰可辨，视线不得有阻挡。

准备组装时，确保安装布局与设备相符。

3.1 机械安装

3.1.1 外形尺寸示意图（单位：mm）

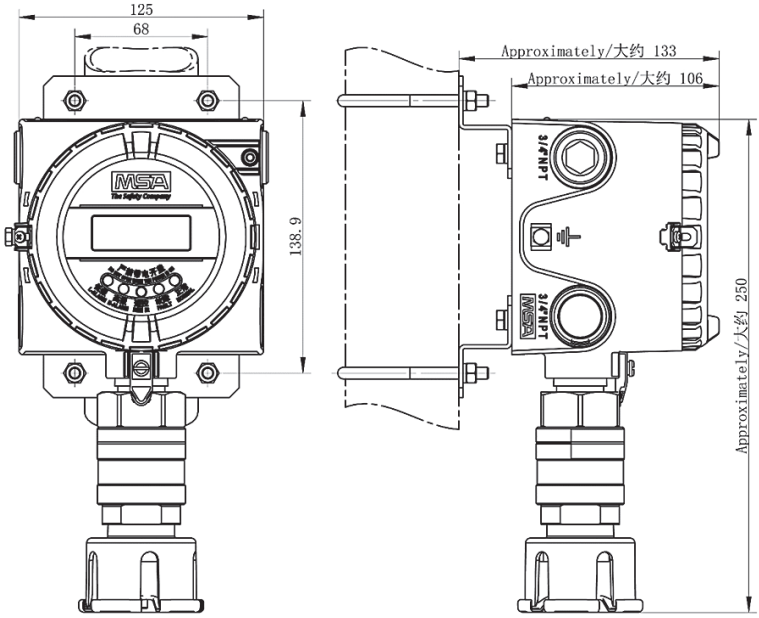

图3 DF-8500 外形尺寸示意图

3.1.2 DF-8500 安装示意图

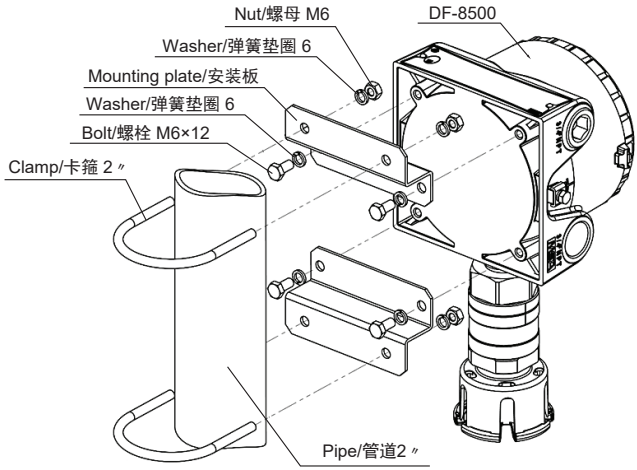

DF-8500 竖直管安装

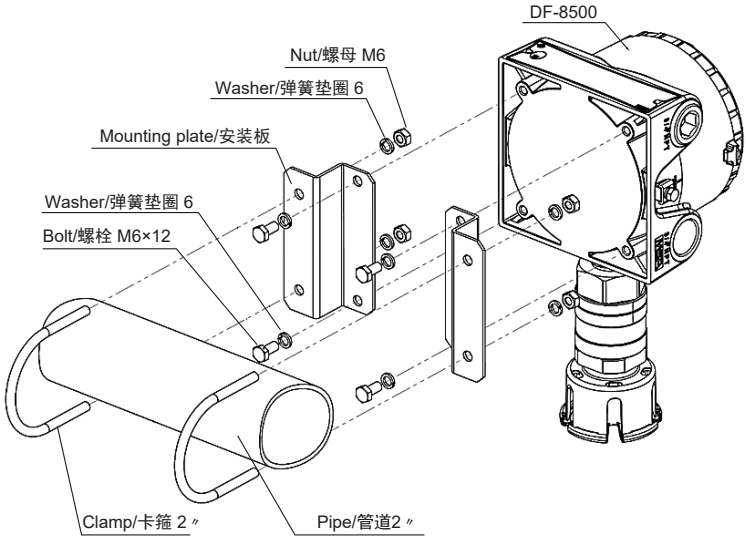

DF-8500 水平管安装

图4 DF-8500 安装示意图

3.2 电气安装

电气连接说明

探测器的安装必须符合适用的规章制度，否则无法保证其安全操作。

电缆要求：

- 始终选用适当的电缆类型和直接作为输入电源及输出信号的接线。建议使用电缆的线径为1mm²~2.5mm²或者14 AWG~16 AWG。
- 必须给探测器使用屏蔽电缆。如果不使用屏蔽电缆，将不能保证达到探测器设计的抗干扰性能。

- 始终遵守最大电缆长度和横截面的要求（见6.2节）。
- 水或杂质会通过电缆渗透进入探测器。在危险区域，建议将探测器入口前的那部分电缆绕成一个圈，或略微弯折电缆，防止水进入探测器。

探测器供电电源是24V直流电。

电气连接请见下图及下表

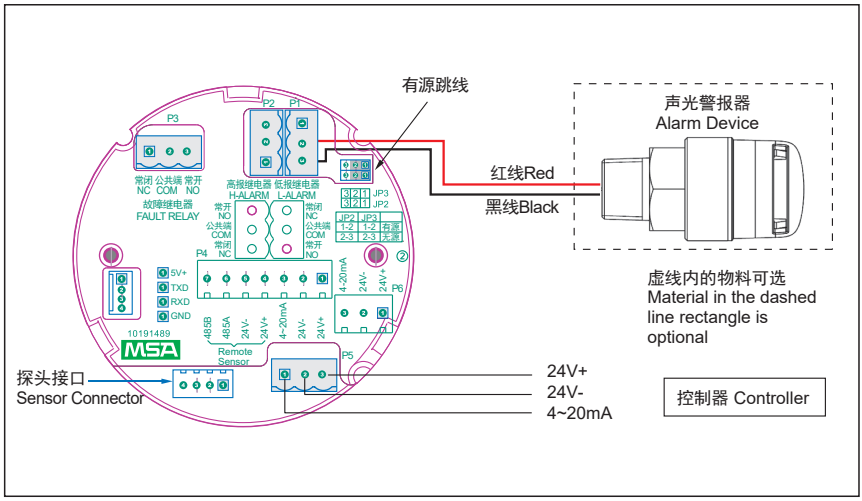

图5-1 DF-8500 内部接线示意图（低报警继电器配置为有源输出）

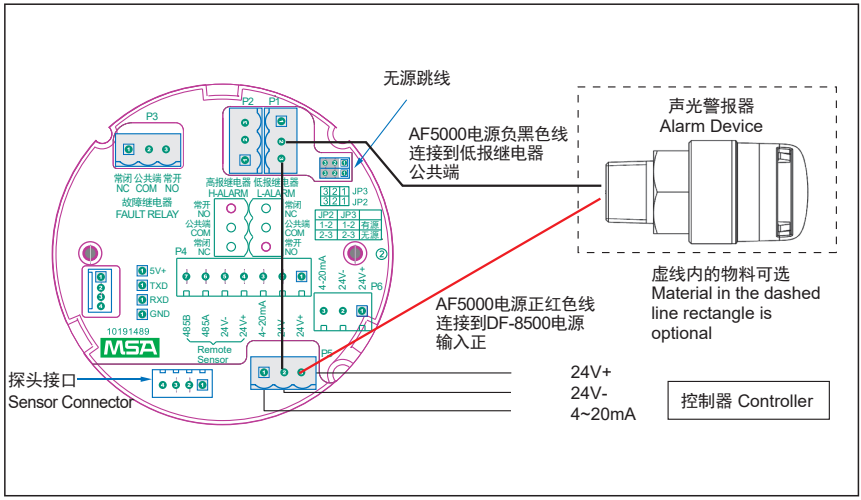

图5-2 DF-8500 内部接线示意图（低报警继电器配置为无源输出）

端子名	用途
24V+	接DC 24V+
24V-	接DC 24V-
4-20MA	仪表(4~20)mA输出端
NO	不通电常开端
COM	公共端
NC	不通电常闭端

表1 端子名称及相应的用途

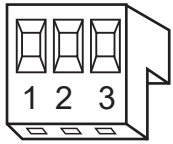

图6 DF-8500 电源接线端

端子号	端子名
1	DC 24V+
2	DC 24V-
3	(4 ~ 20)mA信号

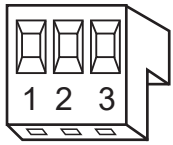

图7 DF-8500 继电器接线端
（适用于所有的继电器）

端子号	端子名
1	不通电常开端
2	公共端
3	不通电常闭端

图8 DF-8500 三线制连接

（1）拧下探测器盖和壳体上的互锁装置。
（2）拧下外壳盖子。
（3）用一只手抓住电子模块塑料壳的左右两个突起，将电子模块从外壳中拔出来。
（4）将连接电缆插入设备。
（5）连接电缆和接线端。
- 对于电源和信号线，请使用3线屏蔽电缆。
- 继电器用线无需使用屏蔽电缆。

（6）将接好线后的电子模块重新插入到外壳中；
（7）重新盖好外壳盖，固定互锁装置。

4 操 作

设备由工厂标定好，交付即可安装，安装好后需要进行首次标定。

4.1 启动

在启动期间进行自检，并将输出信号设定为工作电流（默认：4.0mA），显示出如下信息：

- 显示测试
  上电后，显示屏上所有显示段亮，LED指示灯会按照绿→红→红→黄的次序逐个点亮，全部点亮完毕后绿色LED开始闪烁，表示进入启动状态。
- 固件版本
  显示屏显示固件版本。
- 传感器类型
  显示屏显示不同类型的传感器的配置信息，如CO和H_2S等等。
- 量程
  显示屏显示预先设定的气体传感器量程，如1000表示1000μmol/mol等等。
- 报警动作值
  显示屏显示预先设定的报警动作值，如100和300分别表示100μmol/mol和300μmol/mol等等。
- 倒数记时
  显示传感器稳定性的倒数记时。
- 正常操作
  倒数记时结束后，显示气体浓度，进入测量模式。

注：1μmol/mol = 1ppm

4.2 菜单顺序

4.2.1 遥控器功能描述

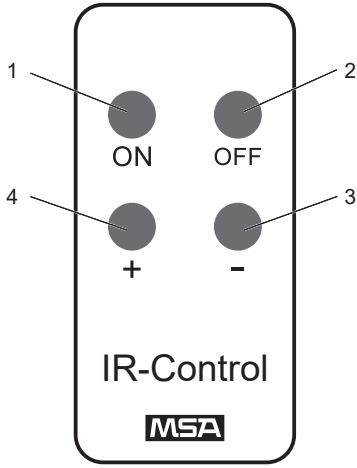

序号	按键	作用
1	ON	进入某个菜单项/保存
2	OFF	退出/放弃修改
3	-	下翻菜单项/减少数值
4	+	上翻菜单项/增加数值

图9 遥控器按键功能描述

4.2.2 菜单顺序

菜单项目	文本信息	是否需要密码
M-00	报警（继电器）复位	需要
M-01	零点标定	不需要
M-02	增益标定	不需要
M-03	探测器的参数查看	不需要
M-04	标定参数的设置	需要
M-05	传感器更换	需要
M-06	LED测试	不需要
M-07	回路测试	不需要
M-09	传感器信息显示	不需要
M-10	继电器参数设置	需要
M-11	继电器测试	需要
M-13	手动零点标定	需要
M-14	手动增益标定	需要

表2 DF-8500 菜单项

[M-00] -- 报警（继电器）复位

本菜单用于复位探测器的报警。仅当继电器被设定为锁定时，本菜单才会显示。

（1）按“+”键，选择菜单M-00。

（2）按“ON”键，此时出现密码输入菜单。

（3）输入密码（见4.4节）。

（4）若输入的密码正确，并且当前的报警条件已经不存在了，则锁定的报警被复位。

[M-01] -- 零点标定

（1）按“+”键，选择菜单M-01。

（2）按“ON”键后，显示倒计时时间，默认为30秒。

（3）通入零点气（纯氮气或者没有被测气体的环境大气）。

（4）再次按“ON”键后，开始倒计时。

（5）等待倒记时结束后，屏幕闪烁显示当前的零点值

（注：此零点值的显示不一定为0）。

（6）零点标定通过后，闪烁显示三下“OK”。

（7）返回到测量模式下运行。

注意：对于氧气，硫化氢和一氧化碳等常规气体，请确保在探测器上电一小时以后再进行零点标定，对于环氧乙烷，甲醇，氯乙烯等稀有气体，此时间需要加大到二十四小时。

[M-02] -- 增益标定

（1）按“+”键，选择菜单M-02。

（2）按“ON”键后，显示倒计时时间，具体的默认倒计时时间及可修改范围见M-04的表格。

（3）通入标定气。

（4）再次按“ON”键后，开始倒计时。

（5）等待倒记时结束后，屏幕闪烁显示当前测量到的浓度。

（6）增益标定通过后，闪烁显示三下“OK”。

（7）然后开始下一个倒计时，在此倒记时过程中可以停止或者不停止供应测试气体。

（8）倒计时结束后返回到测量模式下运行。

注意：对于氧气，硫化氢和一氧化碳等常规气体，请确保在探测器上电一小时以后再进行增益标定，对于环氧乙烷，甲醇，氯乙烯等稀有气体，此时间需要加大到二十四小时。

[M-03] -- 探测器的参数查看

在此菜单上显示设备信息，包括气体类型、量程和固件版本。

（1）按“+”键，选择菜单M-03。

（2）按“ON”键，则滚动显示“参数名=参数值”，表示现在显示的参数的名称和内容，有多个参数可以显示。在此子菜单上用“+”或“-”键可以选择要查看的参数（TEST GAS=…, SENSOR USED DAYS=…, GAS=…）。

子菜单	参数含义
TEST GAS=	标定气浓度
SENSOR USED DAYS=	传感器已经使用时间显示，单位为天
GAS=	当前配置的气体类型
RANGE=	量程
VER=	固件版本
Z CALI COUNTER=	已经做过的零点标定次数
S CALI COUNTER=	已经做过的增益标定次数

[M-04] -- 标定参数的设置

本菜单用于设定仪表工作和标定过程中需要用到的一些参数。

（1）按“+”键，选择菜单M-04。

（2）按“ON”键，此时出现密码输入菜单。

（3）输入密码（见4.4节）。

（4）若密码输入正确，则进入下一层子菜单，有多个参数可以设置，进入下一层子菜单时菜单滚动显示“参数名=　参数值”，表示现在设置的参数的名称和内容，有多个参数可以设置。在此子菜单上用“+”或“-”键可以选择要更改的参数（TEST GAS =…, CURRENT OFFSET =…）。

（5）当定位到需要更改的参数时，按“ON”键则参数闪烁显示进入编辑状态。

（6）进行参数更改（见下表）。

（7）参数更改完毕后，可以按“+”或“-”键继续进行其他参数的更改，或者按“OFF”键返回上一层菜单M-04。

子菜单	参数含义	默认值	可调范围	备 注
TEST GAS=	标定气浓度设定		无小数点量程: 5~(量程-1) 带小数点量程: 0.5~(量程-0.1)	单位: μmol / mol 或%V/V
CURRENT OFFSET=	(4 ~ 20) mA 输出微调	120	90 ~ 150	把数字调小则输出4~20mA减小反之增大
ALARM_L=	低报警点设置	10%量程 (氧气25%量程:19. 5%)	无小数点量程: 5~(高报警点-1) 带小数点量程: 0. 5~(高报警点-0. 1)	单位: μmol / mol 或%V/V
ALARM_H=	高报警点设置	30%量程 (氧气25%量程:23. 0%)	无小数点量程: (低报警点+1)~(量程-1) 带小数点量程: (低报警点+0. 1)~(量程-0. 1)	单位: μmol / mol 或%V/V
ZERO TIME=	零点标定倒计时(秒)	30	10 ~ 99	
SPAN TIME=	增益标定倒计时(秒)	氧气, 一氧化碳:30 硫化氢:60 环氧乙烷, 氯乙烯:180 甲醇, 甲醛:300	10 ~ 900	
IDLE TIME=	增益标定完后的倒计时(秒)	15	10 ~ 99	
4-20MA OUTPUT MODE=	增益标定时电流输出模式	FLOT	4mA: 标定时输出电流固定为4mA FLOT: 标定时输出电流跟随显示浓度变化	
FACTORY DEFAULT=	恢复工厂默认设置	0	1: 恢复工厂默认设置	
TEMP SETTING=	内部温度传感器温度调整	NA	NA	仅当外部传感器损坏时此菜单才会出现
HART CURRENT OFFSET=	当HART输出电流不准确时,可以微调此值修正电流	0	<= 2%量程	
LOW TEMP ZERO COMP -ENSATION=	低温零点补偿因子	0.00		生产中不需要
HIGH TEMP ZERO COMP -ENSATION=	高温零点补偿因子	0.00		生产中不需要

子菜单	参数含义	默认值	可调范围	备 注
P2=	可燃气长期低浓度运行使能	0		0: 不能运行在长期低浓度的场合 1: 可以运行在长期低浓度的场合
P3=	毒气(氧气)长期低浓度运行使能	0		0: 不能运行在长期低浓度的场合 1: 可以运行在长期低浓度的场合

注："FACTORY DEFAULT"菜单项平时显示为0，当设成1后，则仪表自动重新启动，并且显示"BOOT"，此时所有的参数都恢复为工厂默认设置，需要重新进行气体类型设定，零点标定和增益标定等等。

[M-05] -- 传感器更换

对于毒气探测器，通过本菜单在上电状态下更换传感器，同时重设传感器使用时间(天数)计数器。

（1）按"+"键，选择菜单M-05。

（2）按"ON"键，此时出现密码输入菜单。

（3）输入密码（见4.4节）。

（4）若密码输入正确，则进入下一层子菜单，同时从900秒(共计15分钟)开始倒计时，表示在此时间内更换传感器将不会引起报警，再次按下"ON"键则传感器工作时间被清零，倒计时中断后返回浓度测量界面；按"OFF"键中断倒计时，并清除探头使用时间，返回M-05菜单项。

（5）按"OFF"则返回上一层菜单M-05。

注意：对于环氧乙烷(ETO)，氯乙烯(VCM)和甲醇(Methanol)传感器，由于其预热时间比较长（24小时），所以在更换传感器后的24小时左右内，会出现超量报警，这个属于正常情况。

[M-06] -- LED测试

LED测试，显示数码管的所有区段，同时发光二极管也闪烁。

（1）按"+"键，选择菜单M-06。

（2）按"ON"键，此时闪烁显示"OFF"。

（3）按"+"键，则数码管的所有笔端和LED发光二极管被全部点亮。

（4）按"OFF"键退出菜单M-06。

[M-07] -- 回路测试

在此菜单上可以执行(4~20) mA回路测试。

（1）按"+"键，选择菜单M-07。

（2）按"ON"键，则显示04表示初始电流为4mA。

（3）再次按"ON"键则04开始闪烁显示，表示此时已经进入了回路测试阶段，

此时回路的输出电流为4mA。

（4）按“+”或者“–”键更改，此时闪烁值也跟着改变，同时输出电流也跟着改变。

（5）按“OFF”键则退出回路测试状态，返回上一层菜单M-07。

注意：回路测试输出电流的范围是4 ~ 22mA。

[M-09] -- 传感器信息显示

本菜单显示一些与传感器有关的信息，通过这个可以对传感器的工作状态进行初步的判断。

（1）按“+”键，选择菜单M-09。

（2）按“ON”键，则滚动显示“参数名=参数值”，在此子菜单上用“+”或“-”键可以选择要查看的参数（TEMP =…, CURRENT =…， S+=…）。

子菜单	参数含义
TEMP=	当前探测器所处环境温度显示
CURRENT=	输出的（4~20）mA电流显示
SIGNAL=	传感器输出信号显示(对于CO，H_2S，此信号约为0.5V左右； 对于O_2，此信号约为0.8V左右； 对于ETO，VCM，CH_3OH，此信号约为0.8V左右； 以上均指在洁净空气中)
V_REF=	参考电压信号显示，0.5V左右
VCC=	24V电压实际值
VDD=	5V电压实际值
HUMIDITY=	当前探测器所处环境湿度显示

[M-10] -- 继电器参数设置

本菜单项用来对探测器的继电器的动作进行设置。

（1）按“+”键，选择菜单M-10。

（2）按“ON”键，此时出现密码输入菜单。

（3）输入密码（见4.4节）。

（4）若密码输入正确，则进入下一层子菜单，有多个参数可以设置，此时菜单滚动显示“参数名=参数值”。在此子菜单上用“+”或“–”键可以选择要更改的参数（L_ALARM DIR =…, H_ALARM DIR =…, ALARM RELAY =…）。

（5）当定位到需要更改的参数时，按“ON”键则参数闪烁显示进入编辑状态。

（6）按“+”或“–”键进行参数更改，按“ON”保存或“OFF”放弃修改。

（7）参数更改完毕后，可以按“+”或“–”键继续进行其他参数的更改，或者按“OFF”键返回上一层菜单M-10。

子菜单	参数含义	默认值	可调范围	备 注
L_ALARM DIR=	低报警继电器 报警方向设置	25%量程的氧气:UP 其他: DOWN	UP, DOWN	UP：向上 Down：向下
H_ALARM DIR=	高报警继电器 报警方向设置	UP	UP, DOWN	
ALARM RELAY=	报警继电器激励、非激励设置	DISE	DISE, ENER	DISE：非激励 ENER：激励
ALARM RELAY=	报警继电器自锁、非自锁设置	UNLK	UNLK, LOCK	UNLK: 非自锁 LOCK: 自锁
ALARM DELAY=	报警延时设置	0	0 ~ 30秒	

注意：

1）高低报警继电器的激励/非激励和自锁/非自锁设置不能单独设置，只能同时设置。

2）报警延时仅对低报警继电器有效。另外在低报警延时期间，若高报警也被触发，则低报警延时立即结束，同时触发低报警。

故障继电器在没有故障时是激励状态，端子输出有常开和常闭输出。
故障继电器是激励状态主要是为了失效安全。就是在任何故障事件包括掉电发生时，继电器输出会变为非激励状态。
故障继电器只能是激励输出，不能被设置成其他模式。

[M-11] -- 继电器测试

本菜单用来对探测器的继电器的动作进行测试，这样的话方便在现场进行联动测试。

（1）按“+”键，选择菜单M-11。

（2）按vON”键，此时出现密码输入菜单。

（3）输入密码（见4.4节）。

（4）若密码输入正确，则进入M-11的下一层菜单，此时闪烁显示“OFF”，此时按“+”键的话，则继电器的状态取反，即原来闭合的现在断开，原来断开的则现在闭合（原来是闭合还是断开取决于继电器设为激励还是非激励）。继续按“+”键的话，则状态继续取反。测试完毕后按“ON”或者“OFF”键，则继电器恢复原来的状态，同时返回到M-11菜单。

[M-11] -- 继电器测试

本菜单用来对探测器的继电器的动作进行测试，这样的话方便在现场进行联动测试。

（1）按“+”键，选择菜单M-11。

（2）按vON”键，此时出现密码输入菜单。

（3）输入密码（见4.4节）。

（4）若密码输入正确，则进入M-11的下一层菜单，此时闪烁显示“OFF”，此时按“+”键的话，则继电器的状态取反，即原来闭合的现在断开，原来断开的则现在闭合（原来是闭合还是断开取决于继电器设为激励还是非激励）。继续按“+”键的话，则状态继续取反。测试完毕后按“ON”或者“OFF”键，则继电器恢复原来的状态，同时返回到M-11菜单。

[M-13] -- 手动零点标定

本菜单用于对探测器的零点进行手动标定。注：请尽量利用M-01进行自动零点标定，仅在现场由于风速过大或者其他因素导致气体流量不稳定，从而不能利用M-01完成自动零点标定时才使用M-13手动完成零点标定。

（1）通入零点气（纯氮气或者没有被测气体的环境大气）。

（2）按“+”键，选择菜单M-13。

（3）按“ON”键，此时出现密码输入菜单。

（4）输入密码（见4.4节）。

（5）若密码输入正确，则进入M-13的下一层菜单，此时会闪烁显示“0”，表示此时准备进行手动零点标定工作，按“OFF”键则取消手动零点标定工作返回菜单项M-13；按“ON”键则完成零点标定工作，并且自动返回到测量模式，此时可以看到浓度显示已经为0。

注意：对于氧气，硫化氢和一氧化碳等常规气体，请确保在探测器上电一小时以后再进行零点标定，对于环氧乙烷，甲醇，氯乙烯等稀有气体，此时间需要加大到二十四小时。

[M-14] -- 手动增益标定

本菜单用于对探测器的增益进行手动标定。注：请尽量利用M-02进行自动增益标定，仅在现场由于风速过大或者其他因素导致气体流量不定，从而不能利用M-02完成自动增益标定时才使用M-14手动完成增益标定。

（1）通入M-03中显示的浓度的标定气体一分钟之后。

（2）按“+”键，选择菜单M-14。

（3）按“ON”键，此时出现密码输入菜单。

（4）输入密码（见4.4节）。

（5）若密码输入正确，则进入M-14的下一层菜单，此时会闪烁显示M-03中显示的浓度，表示此时准备进行手动增益标定工作，按“OFF”键则取消手动增益标定工作返回菜单项M-14；按“ON”键则完成增益标定工作，并且自动返回到测量模式，此时可以看到浓度显示已经为M-03中指定的浓度。

（6）拿掉增益标定气体。

注意：对于氧气，硫化氢和一氧化碳等常规气体，请确保在探测器上电一小时以后再进行增益标定，对于环氧乙烷，甲醇，氯乙烯等稀有气体，此时间需要加大到二十四小时。

4.3 标 定

为确保产品的性能稳定，梅思安推荐用户每三个月进行一次标定，标定流量为0.25升/分，并且标定应该采用梅思安规定的标定帽。长期不进行标定或者使用不正确的标定流量及不正确的标定帽会对产品的性能造成不良影响。

尽管设备出厂前已经标定，但是仍然建议安装后进行二次标定。传感器的使用期和化学曝露度决定标定操作的频率。

调试时必须标定设备，之后也应定期标定，保证传感器的最佳操作

推荐标定前连接所有标定部件，以便在倒记时期间向设备输入标定气体。

待标定气体一旦标定开始就必须提供标定气体（零点或增益气体），标定结束前不得中断供气。

标定步骤

零点标定操作请参照4.2.2的M-01； 增益标定操作请参照4.2.2的M-02。

按“OFF”键随时可以退出标定程序，退出后设备仍使用探测器上一次的标定结果。

4.4 密码

用一个4位数的密码锁定某些只能由具备资质的授权人修改的菜单。

默认密码是0000。

进入密码菜单 后，从左到右设置数值，闪烁位表示正在编辑的位。

（1）按“+”或“–”键，修改数值。

（2）按“ON”键，进入下一个数字位（千位->百位->十位->个位）。

（3）4个数字全部输入后，密码生效。

5 维护保养

5.1 传感器更换

危 险!

仔细拆下再重新装上传感器，确保不造成部件损坏；否则会对设备准确性造成不利影响，产生错误读数，并造成严重人员伤亡。

进行传感器更换时，请用M-05重新设定传感器使用寿命计数器。

注意：传感器更换后，必须重新标定仪表。

6 技术数据

6.1 探测器主要技术参数

外壳	铝制外壳 隔爆 防护等级：IP66/IP67 (不包含传感器部分)
尺寸，毫米（高×宽×深)	约250×125×106
防爆标志	Ex d ia [ia Ga] IIC T6 Gb；Ex tD A21 IP66/IP67 T80℃
重量	约2公斤(不含包装)
湿度	5%至95%相对湿度，非凝露
电源	(16.0~34.0) V
功率消耗	1.5W(不含声光报警器)
温度范围（仪表） 温度范围（传感器）	(-40~+70) ℃ 见传感器标签
信号输出	(4~20) mA
继电器	低/高报警继电器（激励/非激励可选） 故障继电器（激励输出）
压力	(80~120)千帕
最大负载电阻	300欧姆
空气流速	(0~6)米/秒
继电器触点容量	DC 30V, 2A

6.2 电缆接线尺寸和最大长度（米）：

供电模式	不带声光警报器			带声光警报器(AF5000, 有源模式)		
	1.0mm²电缆	1.5mm²电缆	2.5mm²电缆	1.0mm²电缆	1.5mm²电缆	2.5mm²电缆
DC 24V 电源	3000	4500	7500	950	1400	2400

注：以上数据仅供参考，在现场有很多因素会影响传输距离，比如电源的质量，传输电缆的质量等等，导致现场的数据跟表格中的有所不同。

6.3 主要性能规格

气体类型	预热时间	存储温度
氧气/硫化氢/一氧化碳	1小时	(0~+50)℃
环氧乙烷（ETO）	24小时	(0~+50)℃
甲醇（CH_3OH）	24小时	(0~+50)℃
氯乙烯（VCM）	24小时	(0~+50)℃
甲醛	24小时	(0~+50)℃

测量对象	检测误差	响应时间（T_{90}）	重复性误差
氧气（O_2）	±2% F.S	≤20s	≤1%
一氧化碳（CO）	±10%F.S/±5μmol/mol	≤15s	≤2%
硫化氢（H_2S）	±5μmol/mol	≤25s	≤2%
环氧乙烷（ETO）	±10% F.S	≤120s	≤5%
甲醇（CH_3OH）	±10% F.S	≤120s	≤5%
氯乙烯（VCM）	±10% F.S	≤120s	≤5%
甲醛（HCHO）	±10% F.S	≤120s	≤5%

气体种类	SPAN时间(秒)
氧气（O_2）	30
一氧化碳（CO）	30
硫化氢（H_2S）	30
环氧乙烷（ETO）	180
氯乙烯（VCM）	180
甲醇（CH_3OH）	300
甲醛（HCHO）	300

6.4 可检测气体及量程列表

气　体	可选范围	使用温度范围
氧气（O_2）	10%Vol/Vol. 25%Vol/Vol.	(-20~50)℃
一氧化碳（CO）	100μmol / mol 200μmol / mol 500μmol / mol 1000μmol / mol 2000μmol / mol	(-40~55)℃
硫化氢（H_2S）	10.0μmol / mol 20.0μmol / mol 50μmol / mol 100μmol / mol	(-20~50)℃
环氧乙烷（ETO）	10.0μmol / mol 30.0μmol / mol 50μmol / mol	(-20~50)℃
甲醇（CH_3OH）	50μmol / mol 100μmol / mol	(-20~50)℃
氯乙烯（VCM）	50μmol / mol 100μmol / mol	(-20~50)℃
甲醛（HCHO）	10.0μmol / mol 20.0μmol / mol 50μmol / mol 100μmol / mol	(-20~50)℃

注：1μmol / mol = 1ppm

6.5 传感器对干扰的反应

传感器类型和使用寿命不同，其干扰因子也各不相同。
梅思安不建议客户使用干扰气体进行标定。
本表格有可能不完整。传感器还有可能对其他气体敏感。

DF-8500氧气探头使用注意事项：

注意：酸性气体比如二氧化碳和二氧化硫，会被氧气传感器的电解液所吸收而且有助于增加流向电极的氧气的含量，这样相当于增加了氧气的含量，每1%的二氧化碳大概增加0.3%的显示量。DF-8500使用的氧气探头不适合用在二氧化碳浓度连续超过25%的场合。

中毒：

DF-8500所使用的氧气，一氧化碳和硫化氢探头是被设计成可以在很广泛的环境和严酷的条件下使用的，但是要注意的是不管是保存，还是装在仪表中使用，都要避免将探头暴露在高浓度的溶剂蒸气中。

交叉灵敏度：

氧气传感器的交叉灵敏度：

在阈限值(TLV)值以下的毒气对氧气传感器没有交叉灵敏度，但是高浓度（比如超过1%），强氧化性的气体（比如臭氧和氯气）会影响到氧当量，但是其他大部分常见的气体没有影响。

DF-8500 硫化氢传感器的交叉灵敏度表：

气　体	使用浓度值	读 数
一氧化碳	100	<2
二氧化硫	2	0
二氧化氮	3	0
一氧化氮	25	0
氯气	0.5	0
乙烯	100	0
二氧化碳	5000	0
氨气	50	0

DF-8500一氧化碳传感器的交叉灵敏度表：

气　体	使用浓度值	读 数
乙炔	100	88
乙烯	100	97
氢气	100	<28
一氧化氮	48.6	14
二氧化氮	19.5	<0.5
氯气	13.7	<0.5
乙醇	200	0
硫化氢	50	0
二氧化硫	20	0
氨气	20	0

DF-8500 环氧乙烷、氯乙烯、甲醇和甲醛传感器使用注意事项：

1）标定时必须采用聚四氟乙烯（特氟龙）软管，管子尽可能的短，防止对气体的吸附。

2）标定阀必须采用不锈钢材质的，防止对气体的吸附。

3）标定用的软管必须是干燥的，不能是潮湿的，防止水分对气体的吸附。

4）初次开始标定时，必须通电24小时以等待传感器稳定，若传感器没有稳定就开始标定，则标定后显示浓度会出现负漂。

5）增益的标定时间，环氧乙烷和氯乙烯气体的默认值为180秒，甲醇气体默认值为300秒，若减小增益标定的时间，则由于标定时气体浓度还不太稳定，所以会导致标定不准确。

7 附 件

DF-8500包装内包含防雨罩，安装板，卡箍，螺钉和垫圈，快速指南等标准的用于安装的附件。

7.1 传感器防雨罩

任何时间传感器防雨罩都必须盖上，除非使用气流适配器或导管安装组件。周围的环境会影响传感器防雨罩内部的气体混合物。传感器防雨罩的主要功能是防止雨淋，不能用来进行标定，推荐使用标定帽来进行传感器标定。

8 备 件

DF-8500 替换备件表

备件名	部件号
电子类	
电子模块组件, DF-8500 SIL, 毒气和氧气	10202756
本安型遥控器	3450154
机械类	
PCBA外壳, 备件, DF-8500, 毒气	10145768-SP1
PCBA外壳, 备件, DF-8500, 氧气	10145768-SP2
安装组件, 备件, DF-8500	10147141-SP
标定帽	10173071
防雨罩	10178738
探头类	
探头, 备件, DF-8500, 一氧化碳	10152366-SP
探头, 备件, DF-8500, 硫化氢	10152365-SP
探头, 备件, DF-8500, 氧气	10152364-SP
探头, 备件, DF-8500, 环氧乙烷	10160486-SP
探头, 备件, DF-8500, 甲醇	10161341
探头, 备件, DF-8500, 氯乙烯	10161342
探头, 备件, DF-8500, 甲醛	10195378
探头导体, 备件, DF-8500, SIL, 毒气	10202755
探头导体, 备件, DF-8500, SIL, 氧气	10202786
探头导体, 备件, DF-8500, SIL, 环氧乙烷, 氯乙烯	10205281
探头导体, 备件, DF-8500, SIL, 甲醇, 甲醛	10205282

9 附 录

9.1 输出状态

数码管显示	LED颜色	状态	信号电流
数字	绿色或红色	正常或报警	(4~20)mA
	绿色（闪动）	启动	4mA
	绿色（闪动）	标定	4mA或跟随
E-XX	黄色	故障	2mA
HI ↑	红色	超量程	20.5mA
BOOT	黄色	仪表没有被配置	0mA
- 0	绿色	负漂	3.2mA

9.2 故障代码

E-28

若检测到故障，会显示代码E-，以及数字代码和简短描述。
在这种情况下，装置的正常操作模式不会对气体起反应，且输出信号电流为故障值（默认为2mA）。

故障代码	含义	可能原因	采取措施
BOOT	探测器气体类型没有被配置	线路板是全新的	配置气体类型
E-07	Flash自检故障	主板损坏	更换电子模块
E-08	RAM自检故障	主板损坏	更换电子模块
E-09	Flash CRC校验错误	主板损坏	更换电子模块
E-10	看门狗故障	主板损坏	更换电子模块
E-11	ADC24采样数值异常	主板损坏	更换电子模块
E-12	ADC10采样数值异常	主板损坏	更换电子模块
E-13	继电器检测故障	主板损坏	更换电子模块
E-14	任务测试故障	主板损坏	更换电子模块
E-16	Flash写故障	主板损坏	更换电子模块
E-17	外部参考电源故障	主板损坏	更换电子模块
E-20	零点标定超时	零点气流量不稳定	稳定零点气流量
E-21	增益标定超时	增益气流量不稳定	稳定增益气流量
E-22	定期PC指针检测故障	主板损坏	更换电子模块
E-23	定期堆栈检测故障	主板损坏	更换电子模块
E-24	定期通用寄存器检测故障	主板损坏	更换电子模块
E-25	定期特殊功能寄存器检测故障	主板损坏	更换电子模块
E-26	定期电压检测故障	主板损坏或现场电压不稳定	更换电子模块
E-27	中断故障	主板损坏	更换电子模块
E-28	没有检测到传感器	1)主板损坏 2)传感器损坏 3)没有连接传感器	1)更换电子模块 2)更换新的传感器 3)重新连接传感器
E-32	温度传感器故障	主板损坏	更换电子模块
E-34	内部ADC10钳位在高位故障	主板损坏	更换电子模块
E-35	外部ADC24钳位在高位故障	主板损坏	更换电子模块
E-36	RAM软故障	主板损坏	更换电子模块
LOOP	4~20mA信号错误	主板损坏	更换电子模块

若显示出错代码，装置不可能进行正常运作。若重启后仍然显示出错代码，则该装置为故障设备。

9.3 超时

自动标定有4分钟的超时时间，即4分钟内不能完成自动标定时则显示出错代码。在其他界面上并且不按任何按钮超过10分钟的情况下，菜单自动返回浓度测量模式。

9.4 接线图

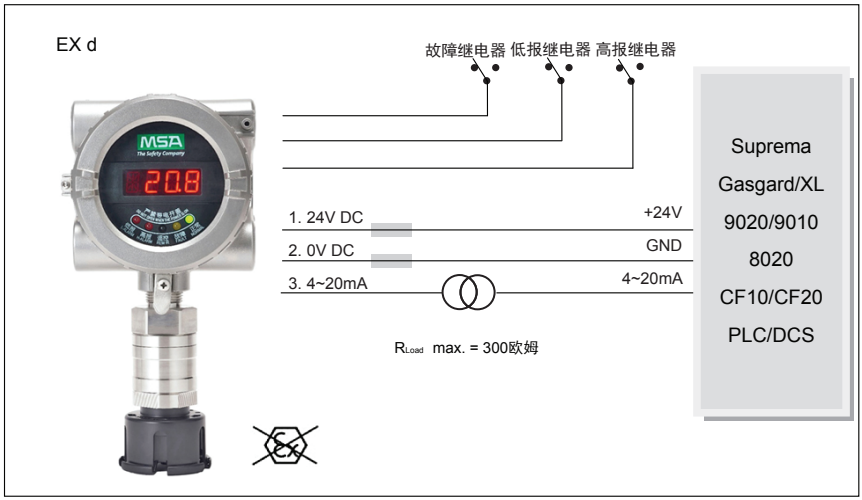

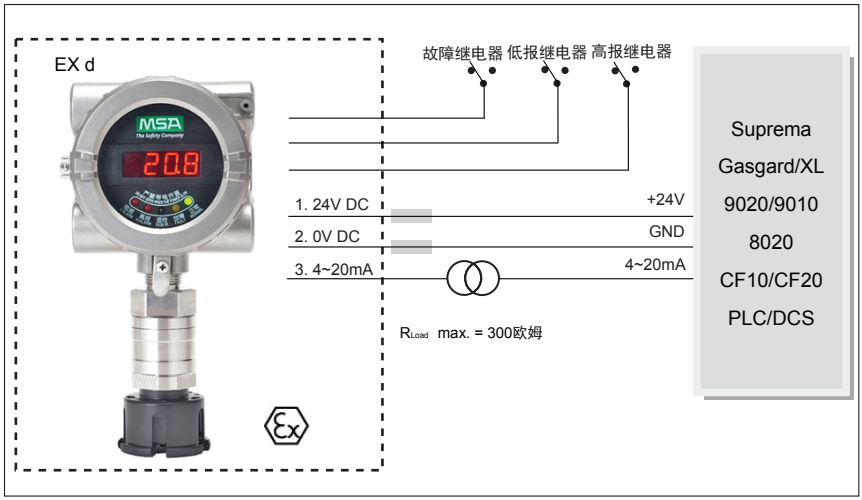

图10 仪表与控制器配接示意图

10 功能要求

本仪表是严格按照IEC61508进行设计，并通过了CSA SIL2的功能安全认证。

10.1 功能安全相关参数

硬件安全等级(SIL)	SIL2
系统能力(SC)	SC 3
类型	B
安全架构	1oo1 或者 1oo2
硬件冗余度HFT	0
PFD, PFH,SFF	见下表
λ_S, λ_D, λ_{DD}, λ_{DU}	见下表
平均修复时间MTTR	72 hr.
检测间隔时间PTI	见下表
环境温度	-40℃~70℃
硬件版本	3
固件版本	0.04

探头	λ_S	λ_D	λ_{DD}	λ_{DU}	SFF
毒气	725	1188	1050	138	92.8%
氧气	713	1133	997	136	92.6%

PTI	Sensor	PFD1oo1	PFD1oo1 % SIL2	PFH1oo1	PFH1oo1 % SIL2	PFD1oo2	PFD1oo2 % SIL3	PFH1oo2	PFH1oo2 % SIL3
16周	Toxic gas	2.67E-04	2.67%	1.38E-07	13.8%	1.34523E-05	1.34%	6.9427E-09	6.94%
	Oxygen gas	2.61E-04	2.61%	1.36E-07	13.6%	1.31631E-05	1.32%	6.87451E-09	6.87%
52周	Toxic gas	6.83E-04	6.83%	1.38E-07	13.8%	3.47425E-05	3.47%	7.04594E-09	7.05%
	Oxygen gas	6.73E-04	6.73%	1.36E-07	13.6%	3.424E-05	3.42%	6.97577E-09	6.98%

10.2 功能安全架构和等级

下表是安全架构和SIL对应模式：

LDM = 低要求模式

HDM = 高要求和连续模式

SIL / 架构	SIL1		SIL2		SIL3	
	LDM	HDM	LDM	HDM	LDM	HDM
架构 1oo1	X	X	X	X		
架构 1oo2	X	X	X	X	X	X

SIL 3配置要求

- 只能是1oo2的架构
- 4~20 mA输出偏差能被监控。

10.3 安全使用通用要求

- 必须按照说明书的要求进行使用仪表。对于标定和维护，一定要按照当地法规进行。
- 当仪表出现问题，一定要在72小时内进行维修。
- 连接的控制器监控4~20mA信号电流时，必须能监控小于4mA和大于20mA的值。
- 系统必须能进行功能和标定检查。
- 在标定时一定要进行目测。
- 每年要进行系统检查。
- 标定和校准是功能和标定检查的一部分。
- 测试气体必须是能监测的气体。测试气体浓度必须是测量量程的中间值。
- 零气是不带碳氢可燃气的干净空气或者是人造空气。
- 以下条件下必须进行标定：
    - 零点值漂移 > +/-5% FS
    - 灵敏度值漂移> +/-20%通气值
- 假如标定检查值在允许误差范围内，标定周期可以延长一倍。
- 最长标定周期是52周。如果探头在运行中灵敏度低于初始值的一半，必须被更换。
- 每年要进行继电器输出功能测试。并且继电器的触点输出要检查。
- 继电器触点输出必须使用一个继电器触点允许额定电流60%的保险丝进行保护。
- 必须使用符合EN60950和EN50178的SELV/PELV的直流开关电源。

10.4 ROHS

部件名称	有 害 物 质					
	铅 (Pb)	汞 (Hg)	镉 (Cd)	六价铬 [Cr(VI)]	多溴联苯 （PBB）	多溴二苯醚 （PBDE）
DF-8500 气体探测器	×	○	○	○	○	×

本表格依据SJ/T 11364的规定编制。

○：表示该有害物质在该部件所有均质材料中的含量均在GB/T 26572规定的限量要求以下。

×：表示该有害物质至少在该部件的某一均质材料中的含量超出GB/T 26572规定的限量要求。

Contents

1 Safety Regulations

1.1 Correct Use

DF-8500 series gas detectors are used to measure toxic gases or oxygen. They are suitable for outdoor and indoor applications without limitations, e.g. petrochemical and gas industry, coal chemical industry, pharmaceutical industry and chemical industry. The signal of the detector can be used in combination with MSA control units, e. g. MSA SUPREMA, Gasgard XL, 9010/9020, 8020 and CF10/CF20.

It is imperative that this operating manual be read and observed when using the product. In particular, the safety instructions, as well as the information for the use and operation of the product, must be carefully read and observed. Furthermore, the national regulations applicable in the user's country must be taken into account for a safe use.

Danger !

- This product is supporting life and health. Inappropriate use, maintenance or servicing may affect the function of the device and thereby seriously compromise the user's life.
- Before use the product operability must be verified. The product must no used if the function test is unsuccessful, it is damaged, a competent servicing/maintenance has not been made for certain component, genuine MSA spare parts have not been used.

Alternative use or use outside this specification will be considered as noncompliance. This also applies especially to unauthorized alterations to the product and to commissioning work that has not been carried out by MSA or authorized persons.

1.2 Liability Information

MSA accepts no liability in cases where the product has been used inappropriately or not as intended. The selection and use of the product are the exclusive responsibility of the individual operator.

Product liability claims, warranties also as guarantees made by MSA with respect to the product are voided, if it is not used.

1.3 Safety and Precautionary Measures to be Adopted

Attention !

The following safety instructions must be observed implicitly. Only in this way can the safety and health of the individual operators, and the correct functioning of the instrument, be guaranteed.

- The device described in this manual must be installed, operated, and maintained in strict accordance with their labels, cautions, instructions, and within the limitations stated.
- The device is designed to detect gases or vapors in air.
- Protect the device from extreme vibration. Do not mount the sensor in direct sunlight as this may cause overheating of the sensor.
- The device must be installed with the sensor inlet pointing downwards to avoid clogging of the gas inlet by particles or liquids.
- Electrochemical sensors are sealed units which contain a corrosive electrolyte. Should a sensor leakage, it must be immediately removed from service and disposed of properly. Caution must be exercised so that the electrolyte does not contact skin, clothing or circuitry otherwise personal injury (burns) and/or equipment damage may result.
- The only absolute method to ensure proper overall operation of the device is to check it with a known concentration of the gas for which it has been calibrated. Consequently, calibration checks must be included as part of the routine inspection of the system. -As with all devices of these types, high levels of, or long exposure to, certain compounds in the tested atmosphere could contaminate the sensor. In atmospheres where the device may be exposed to such materials, calibration must be performed frequently to ensure that the operation is dependable and display indications are accurate.
- The device must not be painted. If painting is done in an area where a device is located, care must be exercised to ensure that paint is not deposited on the sintered metal flashback arrestor in the gas sensor inlet, if so equipped. Such paint deposits would interfere with the gas diffusion process.
- Use only genuine MSA replacement parts when performing any maintenance procedures provided in this manual. Failure to do so may seriously impair instrument performance. Repair or alteration of the device, beyond the scope of these maintenance instructions or by anyone other than an authorized MSA service personnel, could cause the product to fail to perform as designed.
- The device is designed for applications in hazardous areas under atmospheric conditions.
- The response time of the device will be increased by the significant dust deposits on the sensor. Inspections for dust deposits must be done at regular intervals.

1.4 MSA Permanent Instrument Warranty

Please refer to MSA quality assurance statement. MSA will bear the relevant responsibilities for this product during the warranty period provided the product is properly installed, debugged, and used in accordance with MSA' s requirements. MSA shall be released from all obligations under this warranty in the events:

1. Calibration, debugging, maintenance, etc., are performed by persons other than personnel from MSA or authorized by MSA;
2. The product isinappropriately placed, utilized, or modified;

Without explicit authorization by MSA, any affirmation, representation or warranty concerning this product made by any personnel is invalid.

MSA makes no warranty concerning components or accessories not manufactured by MSA. MSA reserves the right to pass onto the Purchaser

The standard warranty period of this product is 12 months from the date of invoice.

2 Description

2.1 Identifying the Unit

Figure 1 DF-8500 Gas Detector

2.2 Overview

The device is factory-calibrated and delivered ready for installation. First calibration is required after installation. After the detector is put into normal operation, it is recommended by MSA to perform calibration once every three months.

The device has:

- a gas sensor
- a four digit 15-segment LED display
- four LEDs for displaying the current status of the detector.

Figure 2 Description of the Various Part of DF-8500

1. Terminal for power connection
2. 4-digit 15-segment LED display
3. Red LED Indicator (low alarm point)
4. Red LED Indicator (high alarm point)
5. Receiver of remote control
6. Yellow LED indicator (fault)
7. Green LED Indicator (normal status)
8. Sensor
9. Locking device of sensor
10. Identification plate
11. Locking device of lid
12. Sensor guard

3 Installation

The device should be installed where gas leaks are expected. The installation position depends on the gas density, either in the upper area of the room under the ceiling for gases lighter than air or closer to the ground for gases heavier than air. Also consider how air movement may affect the ability of the device to detect as. The display on the front of the instrument must always be clearly visible, and he view must not be obstructed.

When preparing the assembly, make sure that the mounting arrangement is correct for the particular device.

3.1 Mechanical Installation

3.1.1 Dimensions Diagram(Unit: mm)

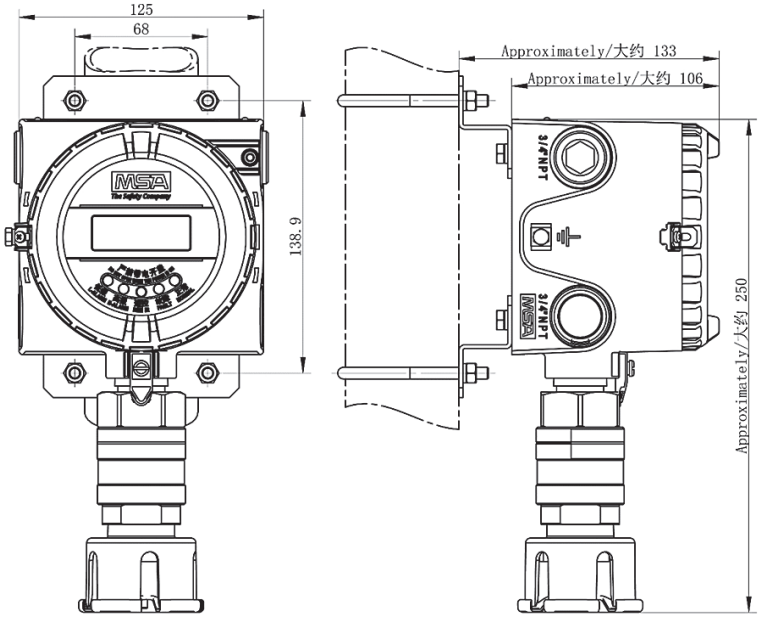

Figure.3 DF-8500 Dimension Diagram

3.1.2 DF-8500 Installation Diagram

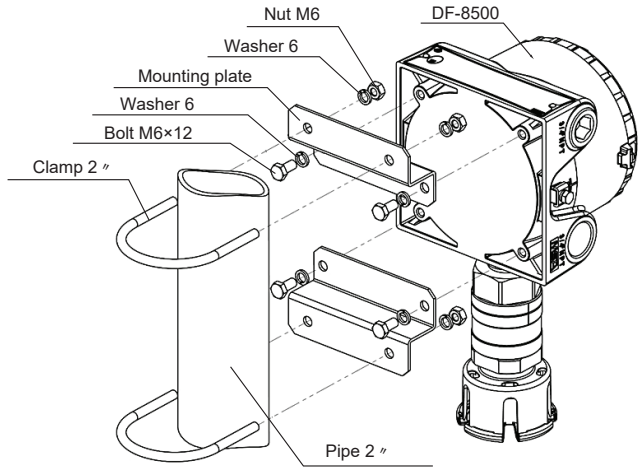

DF-8500 Mounting on Vertical pipe

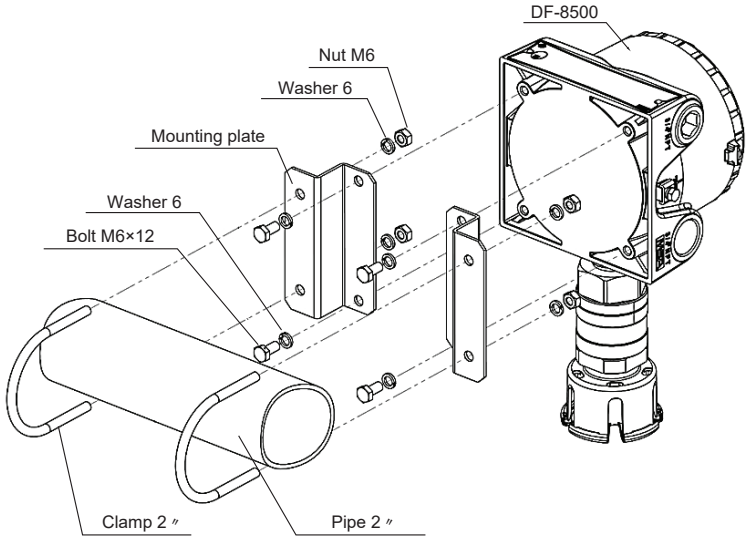

DF-8500 Mounting on horizontal pipe

Figure 4 DF-8500 Installation Diagram

3.2 Electrical Installation

Instructions for Electrical Connection

The device must be installed only in compliance with the applicable regulations, otherwise the safe operation of the instrument is not guaranteed.

-Always select appropriate cable types and wiring directly as input power supply and output signal, the recommended cable diameter is 1mm²~2.5mm² or14 AWG~16 AWG.

-Must use shielded cables for measuring devices. The EMC performance of the detector will not be guaranteed without shielded cables.

-Always meet the requirement of maximum cable lengths and cross-sections (see chapter 6.2).

-Water or impurities can penetrate the instrument through the cable. In hazardous areas, it is recommended to install the cable in a loop just before entry into the instrument or to slightly bend it to prevent water from entering.

The power supply is defined as 24 VDC.

Please see the picture and table below for electrical connection

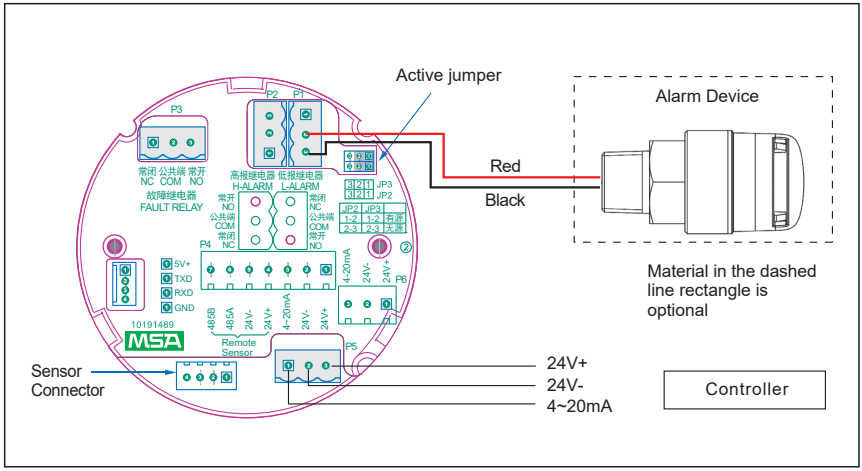

Figure 5-1 DF-8500 internal wiring (Low alarm relay configured as active mode)

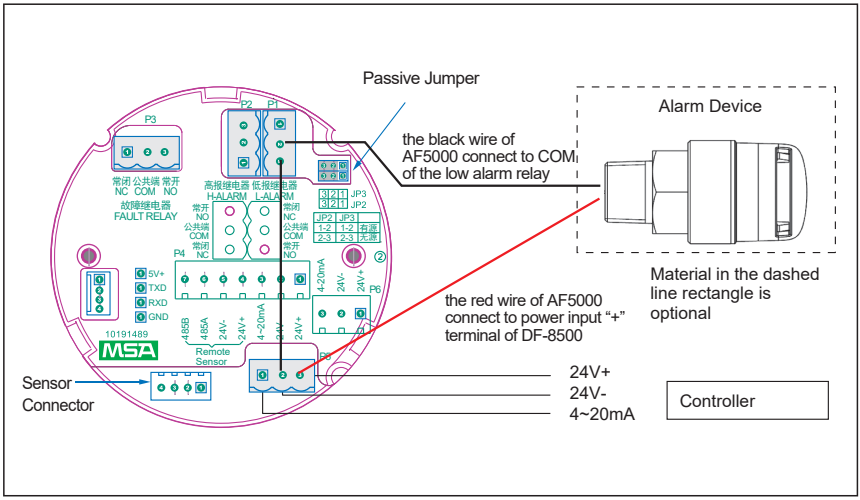

Figure 5-2 DF-8500 internal wiring (Low alarm relay configured as passive mode)

Terminal name	Application
24V +	Connect to DC 24V+
24V -	Connect to DC 24V-
4-20MA	(4~20) mA output of device
NO	Not energized, normally open
COM	Common terminal
NC	Not energized, normally closed

Table 1 Terminal Names and Corresponding Applications

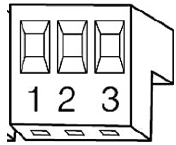

Terminal No.	Terminal Name
1	DC 24V+
2	DC 24V-
3	(4~20)mA signal

Figure 6 DF-8500 Power Connection Terminals

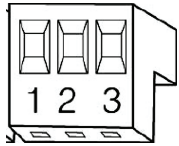

Terminal No.	Terminal Name
1	Not energized,normally open
2	Common terminal
3	Not energized,normally closed

Figure 6 DF-8500 relay terminals
(Applicable to all relays)

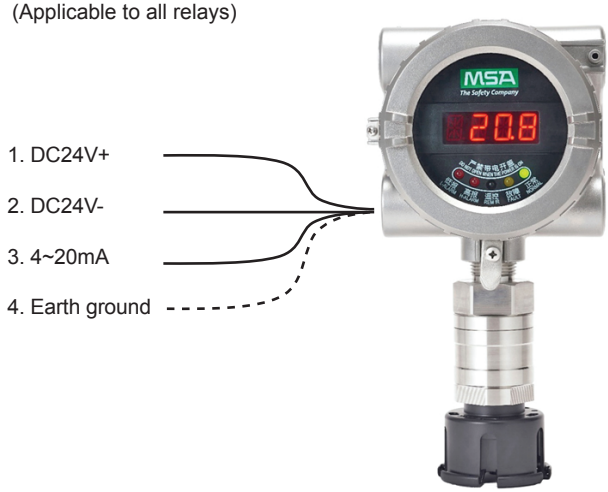

Figure 8 DF-8500 3-wire Connection

(1) Unscrew the interlocking device on the cover of the detector and the enclosure.
(2) Unscrew the aluminum cover of the enclosure.
(3) Use one hand to grab the two projections on the left and right side of the plastic housing and pull the electronic module out of the enclosure.
(4) Insert the cable into the device.
(5) Connect the wire to the terminal.

- **Please use 3-wire shielded cables for power and signal lines.**
- **Shielded cables are not required for the relay.**

(6) Reinsert the properly connected electronic module into the enclosure.
(7) Reinstall the cover and fix the interlock devices.

4 Operation

The device is factory-calibrated and delivered ready for installation. First calibration is required after installation.

4.1 Startup

The device conducts self-checking during it starts up and sets the operating current as output signal (default: 4.0mA), then displays below information:

- **Display testing**

  After power on, all segments on the display light, LED indicators are turned on one by one as the sequence: green->red->red->yellow, and after all the LED indicators light, the green LED starts to flicker.

- **Software version**

  Displays the firmware version.

- **Sensor type**

  Displays the configuration information from different types of sensors, such as CO, H_2S, etc.

- **Measuring range**

  Displays the preset range of the gas sensor. 1000 stands for 1000 μ mol/mol, and so on.

- **Alarm operation value**

  The display shows the preset alarm value. E.g. 100 and 300 stands for 100 μ mol/mol and 300 μ mol/mol respectively.

- **Countdown**

  The screen displays the countdown of sensor's stability.

- **Normal operation**

  After countdown, the screen displays the gas concentration.

Note: 1μmol/mol = 1ppm

4.2 Menu Sequence

4.2.1 Function Description of Remote Controller

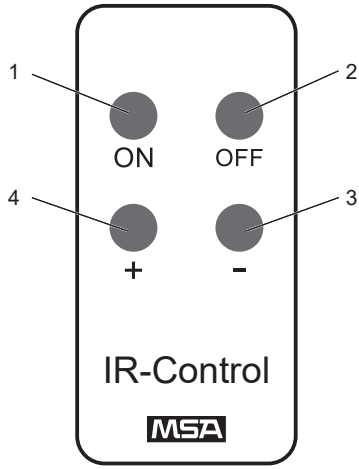

No.	Key name	Function
1	ON	Enter one menu item/Save
2	OFF	Exit/Abandon modifications
3	-	Scroll down the menu items/Decrease value
4	+	Scroll up the menu items/Increase value

Figure 9 Function Description of Remote Controller

4.2.2 Menu Sequence

Menu item1	Text information	Password needed
M-00	Alarm (relay) reset	Yes
M-01	Zero calibration	No
M-02	Gain calibration	No
M-03	Detector parameters view	No
M-04	Calibration parameter setting	Yes
M-05	Sensor replacement	Yes
M-06	LED testing	No
M-07	Loop testing	No
M-09	Sensor information display	No
M-10	Relay setting	Yes
M-11	Relay testing	Yes
M-13	Manual zero calibration	No
M-14	Manual gain calibration	No

Table 2 DF-8500 Menu Items

[M-00] -- Alarm(relay)reset

This menu item is used to reset the alarm of detector. This menu item will be displayed only when the relay is set as locked.

(1) Press “+” to select the menu item M-00.

(2) Press “ON” , and the menu of entering password appears.

(3) Enter the password (see Section 4.4).

(4) If the password is correct and the current alarm condition doesn’ t exist, then the locked alarm is reset.

[M-01] -- Zero calibration

(1) Press “+” to select the menu item M-01.

(2) The display displays zero countdown time after pressing “ON” , with a default value of 30 seconds.

(3) Apply zero gas (Pure Nitrogen or atmosphere without the gas being measured).

(4) Start countdown after pressing “ON” again.

(5) After finishing countdown, the screen flickers to display the current concentration that is measured.

(6) After zero calibration is finished, the screen flickers to display “OK” 3 times.

(7) Return to the measurement mode.

Note: For conventional gas, e.g. O_2, H_2S and CO, please make sure the detector has been powered on for at least one hour before attempting a zero calibration. For rare gas, e.g. ETO, methanol, methanal and VCM, it needs to be 24 hours.

[M-02] -- Gain calibration

(1) Press “+” to select the menu item M-02.

(2) The screen displays span countdown time after pressing “ON” , Please refer to table in M-04 for span time for different gases.

(3) Apply testing gas.

(4) Start countdown after pressing “ON” again.

(5) After finishing countdown, the screen flickers to display the current concentration that is detected.

(6) After gain calibration is finished, the screen flickers to display “OK” 3 times and start the subsequent down count.

(7) You can stop or continue apply testing gas during the countdown process.

(8) Return to measuring mode after finishing count down.

Note: For conventional gas, e.g. O_2, H_2S and CO, please make sure the detector has been energized for at least one hour before attempting a gain calibration. For rare gas, e.g. ETO, Methanol and VCM, it needs to be 24 hours.

[M-03] -- Transmitter parameter view

This menu item displays the device information, including gas type, measuring range, and firmware version.

(1) Press “+” to select the menu item M-03.

(2) Press the “ON” key and the scroll display will show “parameter name = parameter value” which represent the name and content of the parameter displayed. Multiple parameters can be displayed. Press the “+” or “-” on the submenu to select the parameter you want to view

(TEST GAS=..., SENSOR USED DAYS=..., GAS=...).

Submenu Parameter	Meaning
TEST GAS=	Calibration gas concentration
SENSOR USED DAYS=	Display the time the sensor has been used in days
GAS=	Current gas type configuration
RANGE=	Measuring range
VER=	Firmware version
Z CALI COUNTER=	Number of zero calibration conducted
S CALI COUNTER=	Number of span calibration conducted

[M-04] -- Calibration parameter setting

This menu item is used to set some parameters that are needed when setting operation and calibration of the instrument.

(1) Press “+” to select the menu item M-04.

(2) Press “ON” and the screen will display the menu for entering password.

(3) Enter the password (see Section 4.4).

(4) If the password is correct, you will enter the next submenu and be able to set multiple numerous parameters. When you enter the next submenu, the scroll display will display "parameter name = parameter value", which represents the name and content of the parameter being set. You will be able to set multiple parameters. The parameters (TEST GAS =..., CURRENT OFFSET=...) that need to change can be selected by using “+” or “-” in this submenu item.

(5) When the parameters that need to be changed are addressed, press “ON” and then the parameters will flicker to indicate that the device has enter the edit status.

(6) Change the parameters (see Table below).

(7) After the parameters are changed, you can continue to change other parameters by pressing “+” or “-” , or return to the upper menu M-04 by pressing “OFF.”

Submenu Parameter	Meaning	Default	Adjustable Range	Remarks
TEST GAS=	Calibration gas concentration setting		No decimal point range: 5 ~(range-1) Decimal point range: 0.5~(range-0.1)	μmol / mol or %V/V
CURRENT OFFSET=	(4~20)mA output fine tuning	120	90 ~ 150	
ALARM_L=	Low alarm point setting	O2 25% range: 19.5% Others: 10% range	No decimal point range: 5~(range-1) Decimal point range: 0.5~(range-0.1)	
ALARM_H=	High alarm point setting	O2 25% range: 23.0% Others: 30% range	No decimal point range: (low alarm + 1) ~(range-1) Decimal point range: (low alarm + 0.1) ~(range-0.1)	
ZERO TIME=	Zero calibration countdown(second)	30	10 ~ 99	
SPAN TIME=	Gain calibration countdown(second)	O2, CO: 30 H2S: 60 ETO, VCM:180 CH2O, CH3OH: 300	10 ~ 900	
IDLE TIME=	Countdown after gain calibration (second)	15	10 ~ 99	
4-20MA OUTPUT MODE	Current output mode during gain calibration	FLOT	4mA: The output current is fixedat 4mA during the calibration FLOT: the output current changeswith displayed concentrationduring calibration	
FACTORY DEFAULT=	Restore factory default setting	0	1: Restore factory default setting	
TEMP SETTING=	Internal temperature sensor calibration	NA	NA	Appear only external temperature broken or not presence
HART CURRENT OFFSET=	HART output current adjustment	0	<= 2% range	
LOW TEMP ZERO COMP -ENSATION=	Low temperature zero-point compensation	0.00		Do not need during manufacture
HIGH TEMP ZERO COMP -ENSATION=	High temperature zero-point compensation	0.00		Do not need during manufacture
P2=	Combustible long term low concentra -tion run enable	0		0: Disable 1: Enable
P3=	Toxic(Oxygen) long term low concentra -tion run enable	0		0: Disable 1: Enable

Note：The menu item “FACTORY DEFAULT” usually displays 0 When set to 1, instrument will automatically restart and display “BOOT” . In addition, all parameters will be restored to factory default setting, there is a need to re-set gas type, zero calibration and gain calibration.

[M-05] -- Sensor replacement

For the toxic gas detector, you can replace the sensor through this menu item with the device energized and reset the counter of sensor service time (in days).

(1) Press “+” to select menu item M-05.

(2) Press “ON” and the screen will display the menu for entering password.

(3) Enter the password (see Section 4.4).

(4) If you enter the correct password, you will enter the next submenu, and the countdown starts from 900 second (total 15 minutes), it means there will be no alarm when you replace the sensor during this time, the sensor service time will be cleared when pressing “ON” again, and return to the concentration measurement screen after the countdown is interrupted; press “OFF” to interrupt the countdown, and return to menu M-05 with clearing the sensor service time.

(5) Press “OFF” to return to the previous menu M-05.

Note: For ethylene oxide (ETO), chloroethylene (VCM) and Methanol Sensor, their warm-up time is quite long, so excessive alarm will be appeared 24 hours after changing the sensor, which is a normal condition.

[M-06] -- LED testing

LED testing. All segments of the nixie tube display and the LED flickers.

(1) Press “+” to select menu item M-06.

(2) Press “ON” , and then the screen flickers to display “OFF” .

(3) Press “+” , and then all the segments of the nixie tube with the LED diodes are lighted.

(4) Press “OFF” to exit menu item M-06.

[M-07] -- Loop testing

This menu can be used to conduct (4~20) mA loop testing.

(1) Press “+” to select menu item M-07.

(2) Press “ON” and the screen will display 04, which means that the initial current is 4 mA.

(3) Press “ON” again, and 04 starts to flicker. This means that the device has enter loop testing mode, and the output current of the loop is 4 mA.

(4) Press “+” or “-” to change data. At this time, both the flicker value and the output current will also change.

(5) Press “OFF” to exit the loop testing status and return to upper menu M-07.

[M-09] -- Sensor information display

This menu is used to display information related to the sensor, through which the sensor working status can be determined preliminarily.

(1) Press “+” to select the menu item M-09.

(2) Press “ON” and the scroll display will show “parameter name = parameter value.” Press “+” or “-” to select the parameter you want to see (TEMP=..., CURRENT=..., S+=...).

Submenu	Parameter Meaning
TEMP=	Current temperature display
CURRENT=	Output current (4~20)mA display
SIGNAL=	Sensor output signal display (for CO，H_2S，the signal is approximately 0.5V；for O_2，it is approximately 0.8V；for ETO，VCM，CH_3OH，it is approximately 0.8V；all in clean air)
V_REF=	Refer to voltage signal，approximately 0.5V
VCC=	24V voltage
VDD=	5V voltage
HUMIDITY=	Ambient humidity

[M-10] -- Relay parameter setting

This menu is used to set the relay operation of the detector.

(1) Press “+” to select the menu item M-10.

(2) Press “ON” and the screen will display the menu for entering password.

(3) Enter the password (see Section 4.4).

(4) If the password is correct, you will enter the next submenu and be able to set multiple numerous parameters. At the first time you enter the next submenu, the scroll menu will show “parameter name = parameter value” . Press the “+” or “-" on the submenu to select the parameter you want to change

(L_ALARM DIR =..., H_ALARM DIR =..., ALARM RELAY =...).

(5) When the parameters that need to be changed are addressed, press “ON” and then the parameters will flicker to indicate that the device has entered the edit status.

(6) Change the parameters (see Section 4.6).

(7) After the parameters are changed, you can continue to change other parameters by pressing “+” or “-” , or return to the upper menu M-10 by pressing “OFF” .

Submenu	Parameter Meaning	Default	Adjustable Range	Remarks
L_ALARM DIR=	Alarm direction of low alarm relay	25% range O_2: UP Others: DOWN	UP, DOWN	UP: Down:
H_ALARM DIR=	Alarm direction of high alarm relay	UP	UP, DOWN	
ALARM RELAY=	Alarm relay energ -ized, de-energized	DISE	DISE, ENER	DISE: de-energized ENER: energized
ALARM RELAY=	Alarm relay lock unlock	UNLK	UNLK, LOCK	UNLK: not self-locking LOCK: self-locking
ALARM DELAY=	Alarm delay	0	0~30 Seconds	

Note:

1) The energized/de-energized and self-locking/non-self-locking settings of high and low alarm relays cannot be set separately.

2) The alarm delay is only effective for low alarm relays. In addition, in the low alarm delay period, if the high alarm is triggered, the low alarm delay will end immediately, and trigger the low alarm at the same time.

The Fault relay state in non-fault operating condition is Energized and terminal connections are supplied for Normally Closed and Normally Open.
The energized fault relay setting provides an electrical path for fail-safe relay operation. In the event of any failure, including loss of power, the relay will change to the de-energized state to indicate a fault condition.
The Fault relay state cannot be reconfigured.

[M-11] -- Relay Testing

This menu is used to test the relay operation of the detector, so that it is convenient to conduct field linkage testing.

(1) Press “+” to select the menu item M-11.

(2) Press “ON” and the screen will display the menu for entering password.

(3) Enter the password (see Section 4.4).

(4) If the password is correct, then the device enters the next level menu of M-11, and the screen displays “OFF”. If you press “+”, the relay status will inverse, i.e. the original closed relay disconnects while the original disconnected relay closes. If you continue to press “+”, the relay status will continue to inverse. Press “ON” or “OFF” after you have finished the testing, then the relay will return back to the original status and back to menu M-11.

[M-13] -- Manual zero calibration

This menu is used to manually calibrate the zero point. Note: Please use M-01 to

perform automatic zero calibration as far as possible. Manual zero calibration through M-13 shall only be performed when automatic zero point calibration cannot be completed through M-01 when unstable gas flow is caused by strong wind or other factors at the site.

(1) Press “+” select the menu item M-13.

(2) Press “ON” and the screen will display the menu for entering password.

(3) Enter the password (see Section 4.4).

(4) If the password is correct, you will enter the next level of submenu M-13. At this time, a flashing “0” will appear in the display, which indicates that manual zero calibration is ready. Press “OFF” to cancel the manual zero calibration and return to M-13 menu item. Press the “ON” key to complete the zero calibration and return to the measurement mode automatically. At this time, you can see that the concentration display has been reset to 0.

Note: For conventional gas, e.g. O_2, H_2S and CO, please make sure the detector has been energized for at least one hour before attempting a zero calibration. For rare gas, e.g. ETO, methanol and VCM, it needs to be 24 hours.

[M-14] -- Manual gain calibration

This menu is used for manual gain calibration. Note: Please use M-02 to perform automatic gain calibration as far as possible. Manual gain calibration through M-14 shall only be performed when automatic gain calibration cannot be completed through M-02 when unstable gas flow is caused by strong wind or other factors at the site.

(1) Ventilate the gain gas with the concentration level as shown in M-03 for one minute.

(2) Press “+” select the menu item M-14.

(3) Press “ON” and the screen will display the menu for entering password.

(4) Enter the password (see Section 4.4).

(5) If the password is correct, you will enter the next level of submenu M-14. At this time, the concentration as shown in M-03 will flash in the display, which indicates that manual gain calibration is ready. Press “OFF” to cancel the manual gain calibration and return to M-14 menu item. Press the “ON” key to complete the gain calibration and return to the measurement mode automatically. At this time, you can see that the concentration display has been reset to the concentration as shown in M-03.

(6)remove gain calibration gas.

Note: For conventional gas, e.g. O_2, H_2S and CO, please make sure the detector has been energized for at least one hour before attempting a gain calibration. For rare gas, e.g. ETO, methanol and VCM, it needs to be 24 hours.

4.3 Calibration

To ensure the stable performance of the product, MSA recommends the users to perform the calibration every three months. The calibration flow should be 0.25 liter/minute and calibration should use calibration cap regulated by MSA. Failure to perform calibration for a long time or use of incorrect calibration flow and calibration cap may have adverse effects on the product performance.

The device is calibrated at the factory. Nevertheless, it is recommended to recalibrate the device after installation. The frequency of calibration depends on the duration of use and the chemical exposure of the sensor.

Carry out the calibration during commissioning as well as at regular intervals. This ensures optimum operation of the sensor.

It is recommended that all calibration components are connected before starting a calibration as it is necessary to apply test gas to the device during a countdown.

Wait for calibration gas. After starting any calibration, calibration gas (zero or test gas) must be provided until the calibration is completed.

Calibration steps

Zero calibration please refer to M-01 in Chapter 4.2.2; Gain calibration please refer to M-02 in Chapter 4.2.2.

Press “OFF” can exit calibration procedure at any moment and device still use the last calibration result of detector when exit.

4.4 Password

A 4 digits password is used to lock the menus that can be modified only by certificated and authorized personnel.

The default password is 0000.

After entering the password menu, set the number from left to right, and the flicker bit means that the bit is being edited.

(1) Press “+” or “-” to modify the number.

(2) Press “ON” to enter the next bit (thousands->hundreds->tens->units).

(3) After all of 4 digits has been entered, the password becomes effective.

5 Maintenance

5.1 Sensor replacement

Danger !

Remove and reinstall the sensors carefully, ensuring that the components are not damaged; otherwise, the accuracy may be adversely affected, wrong readings may occur, and persons relying on this product for their safety may sustain serious personal injury or death.

When replacing a sensor, please use M-05 to reset the sensor service time counter.

Note: After the sensor is replaced, the instrument must be calibrated again.

6 Technical Data

6.1 Major technical parameters of the detector

Detected gas	**Methane**
Enclosure	Aluminium enclosure Explosion-proof Protection level: IP 67(not including the sensor)
Dimensions, mm (height × width × depth)	Approximately 250×125×106
Explosion-proof sign	Ex d ia [ia Ga] IIC T6 Gb；Ex tD A21 IP66/IP67 T80℃
Weight	Appr. 2 kgs (not including packing)
Humidity	5% to 95% RH, non-condensation
Power source	(16.0~34.0) V
Power consumption	1.5W (not including the audible and visual alarm)
Temperature range (Instrument) Temperature range (Sensor)	(-40~+70) ℃ See sensor tags
Output signal	(4~20)mA
Relay	Two alarm relays (energized or de-energized) Fault relay(energized)
Pressure	(80~120)kPa
Maximum load resistance	300 Ohm
Air flow rate	(0~6) m/s
Relay contact capacity	DC 30V, 2A

6.2 Cable Lengths and Cross-sections (Meter)

Power mode	w/o audible and visual alarm			With audible and visual alarm (AF5000, active mode)		
	1.0mm² cable	1.5mm² cable	2.5mm² cable	1.0mm² cable	1.5mm² cable	2.5mm² cable
DC 24V	3000	4500	7500	950	1400	2400

Note: The above data are for reference only. There are many factors affecting the transmission distance in the field, such as the quality of power supply and transmission cable and so on, which makes the data in the field different from those in the table.

6.3 Primary Performance Specifications

Gas type	Warm up time	Storage temperature
Oxygen/Hydrogen sulfide/Carbon monoxide	1h	(0~+50) ℃
Ethylene oxide (ETO)	24h	(0~+50) ℃
Methanol (CH_3OH)	24h	(0~+50) ℃
Chloroethylene (VCM)	24h	(0~+50) ℃
Methanal (CH_2O)	24h	(0~+50) ℃

Measurement object	Detection error Response	Time (τ90)	Repeatability error
Oxygen(O_2)	±2% F.S	≤20s	≤1%
Carbon monoxide(CO)	±10%F.S/±5μmol/mol	≤15s	≤2%
Hydrogen sulfide (H_2S)	±5μmol/mol	≤25s	≤2%
Ethylene oxide (ETO)	±10% F.S	≤120s	≤5%
Methanol (CH_3OH)	±10% F.S	≤120s	≤5%
Chloroethylene (VCM)	±10% F.S	≤120s	≤5%
Methanal (CH_2O)	±10% F.S	≤120s	≤5%

Gas type	SPAN Time(s)
Oxygen(O_2)	30
Carbon monoxide(CO)	30
Hydrogen sulfide (H_2S)	30
Ethylene oxide (ETO)	180
Chloroethylene (VCM)	180
Methanol (CH_3OH)	300
Methanal (CH_2O)	300

6.4 List of Detectable Gases and Measuring Ranges

Gas	Adjustable Range	Temperature Range
Oxygen(O_2)	10%Vol/Vol. 25%Vol/Vol.	(-20~50) ℃
Carbon monoxide(CO)	100μmol / mol 200μmol / mol 500μmol / mol 1000μmol / mol 2000μmol / mol	(-40~50) ℃
Hydrogen sulfide（H_2S）	10.0μmol / mol 20.0μmol / mol 50μmol / mol 100μmol / mol	(-20~50) ℃
Ethylene oxide (ETO)	10.0μmol / mol 30.0μmol / mol 50μmol / mol	(-20~50) ℃
Methanol (CH_3OH)	50μmol / mol 100μmol / mol	(-20~50) ℃
Chloroethylene (VCM)	50μmol / mol 100μmol / mol	(-20~50) ℃
Methanal (CH_2O)	10.0μmol / mol 20.0μmol / mol 50μmol / mol 100μmol / mol	(-20~50) ℃

Note：1μmol / mol = 1ppm

6.5 Sensor Response to Interferants

The interference factors vary with sensor type and life time.
MSA does not recommend the customers to use interference gases for calibration.
This table may be incomplete. The sensors may be sensitive to other gases.

Precautions for using DF-8500 oxygen sensor:

Note: Acidic gases such as carbon dioxide and sulfur dioxide will be absorbed by the electrolyte oxygen sensors and can help to increase the oxygen that flows to the electrodes. This is equivalent to increasing the oxygen content. The display value will increase approximately 0.3% with 1% increase of the carbon dioxide. The DF-8500 oxygen sensor is not suitable for use in occasions where the carbon dioxide concentration exceeds 25% continuously.

Poisoning:

The oxygen, carbon monoxide, and hydrogen sulfide sensors of DF-8500 are designed to be used under a wide range of environments and harsh conditions. However, please

note that the sensors must be protected from exposure to high concentration solvent vapors for storage or installation and use in the instrument.

Cross Sensitivity:

Cross sensitivity of the oxygen sensor:

There is no cross sensitivity for toxic gas or oxygen sensors under the threshold limit value (TLV). However, high concentration (such as over 1%) and strong oxidizing gas (such as ozone and chlorine) will affect the oxygen equivalent, but most of the other common gases will not be affected.

DF-8500 cross-sensitivity list for the hydrogen sulfide sensor:

Gas	Concentration values	Reading
Carbon monoxide	100	<2
Sulfur dioxide	2	0
Nitrogen dioxide	3	0
Nitric oxide	25	0
Chlorine	0.5	0
Ethylene	100	0
Carbon dioxide	5000	0
Ammonia	50	0

DF-8500 cross-sensitivity list for the carbon monoxide sensor:

Gas	Concentration values	Reading
Acetylene	100	88
Ethylene	100	97
Hydrogen	100	<28
Nitric oxide	48.6	14
Nitrogen dioxide	19.5	<0.5
Chlorine	13.7	<0.5
Ethanol	200	0
Hydrogen sulfide	50	0
Sulfur dioxide	20	0
Ammonia	20	0

Precautions for using DF-8500 ETO, VCM and methanol sensor:

1) Must use polytetrafluoroethylene (Teflon)tube for calibration, and the tube is short as much as possible to prevent adsorbing the gas.

2) Must use stainless steel for the calibration valve material to prevent absorbing the gas.
3) The tube used for calibration must be dry, can’ t be moist, this can prevent water absorbing to the gas.
4) For the first time calibration, the device must be energized for 24h to wait until the sensor is stable, if start the calibration when the sensor is not stable, then the display concentration will appear negative drift after the calibration.
5) For the gain calibration time, the default value of Ethylene oxide and Chloroethylene is 180s, and the default value of Methanol is 300s. If the calibration time is reduced, then the calibration is inaccuracy since the gas concentration is not stable when calibration.

Only order the electrochemical sensors for immediate replacement. Storage temperature range is (20±5)℃。Please handle the electrochemical sensors in accordance with the professional requirements.

7 Accessories

The DF-8500 package contains the standard installation accessories such as the sensor guard, mounting plates, clamps, screws and washers, and quick start guides.

7.1 Sensor Guard

The sensor guard must be installed at all times except when an airflow adapter or conduit installation kit is used. Ambient weather condition can affect the gas mixture inside of the sensor guard. Use the sensor guard for functionality tests only. The calibration cap is recommended for sensor calibration.

8 Spare Parts

DF-8500 replacement parts list

Description	PN
Electronic	
Electronic module, DF-8500 SIL, TOX/OX	10202756
Intrinsic safety Remote control	3450154
Mechanical	
PCBA Housing, DF-8500, TOX	10145768-SP1
PCBA Housing, DF-8500, OX	10145768-SP2
Mounting kit, SP, DF-8500	10147141-SP
Calibration Cap	10173071
Sensor guard	10178738
Sensors	
Sensor, SP, DF-8500, CO	10152366-SP
Sensor, SP, DF-8500, H_2S	10152365-SP
Sensor, SP, DF-8500, O_2	10152364-SP
Sensor, SP, DF-8500, ETO	10160486-SP
Sensor, SP, DF-8500, Methanol	10161341
Sensor, SP, DF-8500, VCM	10161342
Sensor, SP, DF-8500, Methanal	10195378
Sensor conductor, SP, DF-8500, SIL, TOX	10202755
Sensor conductor, SP, DF-8500, SIL, OX	10202786
Sensor conductor, SP, DF-8500, SIL, ETO, VCM	10205281
Sensor conductor, SP, DF-8500, SIL, CH_3OH, CH_2O	10205282

9 Appendix

9.1 Output Status

Digital Display	LED Color	Status	Current Signal
Number	Green or Red	Normal or alarm	(4~20) mA
	Green (flicker)	Start	4mA
	Green (flicker)	Calibration	4mA or follow
E-XX	Yellow	Fault	2mA
HI ↑	Red	Over range	20.5mA
BOOT	Yellow	Instrument is not configured	0mA
- 0	Green	Negative drift	3.2mA

9.2 Error Code

E-28

If the device detects fault, it will display code E-, digital code and short description.
In this situation, the normal operation mode of the device doesn’ t react to the gas, and the output current is the fault value (default is 2mA)..

Error Code	Meaning	Possible cause	Countermeasure
BOOT	Device has not been configured	The circuit board is new	Configure the gas type
E-07	flash self-check fault	Mainboard fault	Replace the electronic module
E-08	RAM self-check fault	Mainboard fault	Replace the electronic module
E-09	Information Flash CRC check fault	Mainboard fault	Replace the electronic module
E-10	Watchdog fault	Mainboard fault	Replace the electronic module
E-11	ADC24 check fault	Mainboard fault	Replace the electronic module
E-12	ADC10 check fault	Mainboard fault	Replace the electronic module
E-13	Relay check fault	Mainboard fault	Replace the electronic module
E-14	Task check fault	Mainboard fault	Replace the electronic module
E-16	Information flash write fault	Mainboard fault	Replace the electronic module
E-17	External reference check fault	Mainboard fault	Replace the electronic module
E-20	Zero calibration timeout	Mainboard fault	Replace the electronic module
E-21	Span calibration timeout	Unstable zero gas flow	Stabilize the zero-gas flow
E-22	Periodically PC check fault	Unstable gain gas flow	Stabilize the gain gas flow
E-23	Periodically stack check fault	Mainboard fault	Replace the electronic module
E-24	Periodically general purpose register check fault	Mainboard fault	Replace the electronic module
E-25	Periodically SFR check fault	Mainboard fault	Replace the electronic module
E-26	Periodically voltage check fault	Mainboard fault	Replace the electronic module
E-27	Interrupt fault	Mainboard fault	Replace the electronic module
E-28	Sensor missing	1)mainboard fault 2)sensor damage 3)sensor not connected	1）Replace the electronic module 2）Replace new sensor 3）Reconnect the sensor
E-32	Temperature sensor fault	Mainboard fault	Replace the electronic module
E-34	ADC10 stuck at high fault	Mainboard fault	Replace the electronic module
E-35	ADC24 stuck at high fault	Mainboard fault	Replace the electronic module
E-36	RAM soft error fault	Mainboard fault	Replace the electronic module
LOOP	4~20 mA signal fault	Mainboard fault	Replace the electronic module

If any error code is displayed, the device will not be able to function properly. If the error code persists after the restart, the device is faulty.

9.3 Timeout

The automatic calibration has a 4-minute timeout; that is, the error code will appear if the automatic calibration cannot be completed within 4 minutes. When no keys are pressed for over 10 minutes, the menu will automatically return to the concentration measurement mode from any other screen.

9.4 Wiring diagram

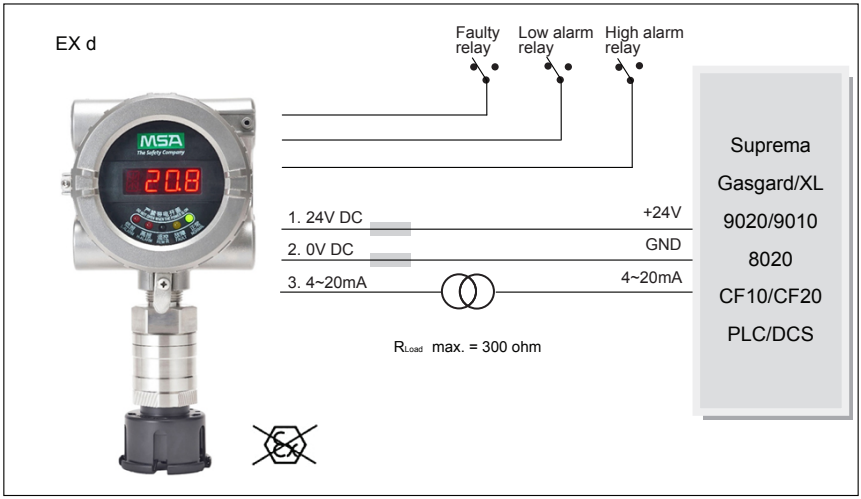

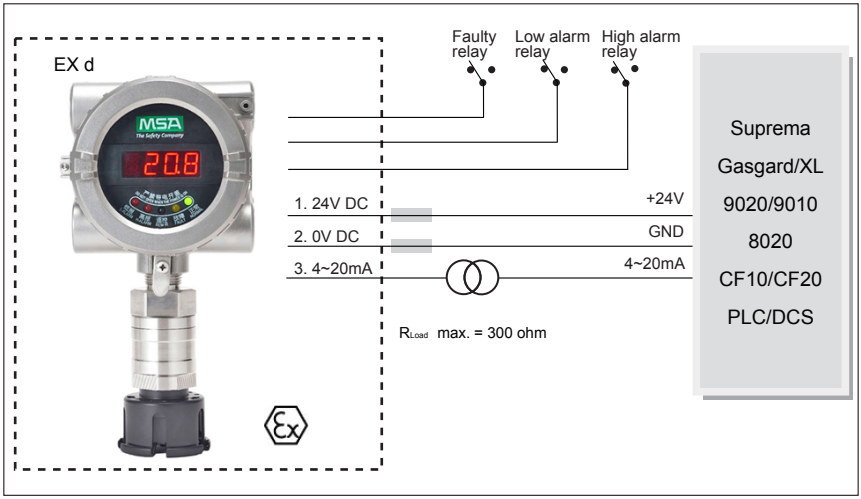

Figure 10 Detector of connection with controller

10 Safe requirement

The DF-8500 Gas Monitor has been subjected to rigorous reliability and functional safety assessments, which have culminated in the gas monitor being certified to IEC 61508 by CSA. The tables below list the SIL parameters for this device.

10.1 Safety relevant parameters

Hardware safety integrity level (SIL)	SIL2
Systematic Capability (SC)	SC 3
Type	B
Safety structure	1oo1 or 1oo2
HFT	0
PFD, PFH,SFF	See table
λS, λD, λDD, λDU	See table
MTTR	72 hr.
Proof test interval (PTI)	See table
Ambient Temperature	-40℃~70℃
Hardware version	3
Software version	0.04

Sensor	λ_S	λ_D	λ_{DD}	λ_{DU}	SFF
Combustible gas	722	1255	1107	148	92.5%
Toxic gas	725	1188	1050	138	92.8%
Oxygen gas	713	1133	997	136	92.6%

PTI	Sensor	PFD1oo1	PFD1oo1 % SIL2	PFH1oo1	PFH1oo1 % SIL2	PFD1oo2	PFD1oo2 % SIL3	PFH1oo2	PFH1oo2 % SIL3
16 weeks	Toxic gas	2.67E-04	2.67%	1.38E-07	13.8%	1.34523E-05	1.34%	6.9427E-09	6.94%
	Oxygen gas	2.61E-04	2.61%	1.36E-07	13.6%	1.31631E-05	1.32%	6.87451E-09	6.87%
52 weeks	Toxic gas	6.83E-04	6.83%	1.38E-07	13.8%	3.47425E-05	3.47%	7.04594E-09	7.05%
	Oxygen gas	6.73E-04	6.73%	1.36E-07	13.6%	3.424E-05	3.42%	6.97577E-09	6.98%

10.2 Possible structures and acquirable SIL

The following table shows which structure has to be selected to fulfill the requirements of a specific SIL.
LDM = Low Demand Mode
HDM = High Demand or Continuous Mode

SIL / level structure	SIL1		SIL2		SIL3	
	LDM	HDM	LDM	HDM	LDM	HDM
Structure 1oo1	X	X	X	X		
Structure 1oo2	X	X	X	X	X	X

Depending on the selected configuration and the sensor version, the following safety-relevant parameters have to be considered while implementing the safety loop:

- Special conditions for SIL 3
  - The use of the device is allowed only in a 1oo2 - structure.
  - The 4-20 mA output of the device must be monitored regarding deviations.

10.3 General requirements for safe use

- The application advice and the limitations of the manual have to be considered. For calibration and maintenance, the regional and national regulations have to be considered.
- A defective device has to be repaired within 72 hours.
- The connected controller has to monitor the 4 ~ 20 mA signal current for values below 4mA and above 20 mA.
- A functional check/calibration check has to be done for the complete system.
- A visual check has to be done together with the calibration.
- A system check has to be done every year.
- Calibration and adjustment are part of the function/calibration check.
- The test gas must be the gas to be monitored. The concentration of the test gas has to be in the middle of the measurement range.
- For zero gas, clean air free of hydrocarbon combustible gas or synthetic air has to be used.
- An adjustment has to be done under the following conditions:
  - difference at zero > +/-5 % LEL
  - difference at sensitivity > +/-20 % of the rated value

- If the calibration is inside of the valid tolerance, the calibration interval can be doubled.
- The maximum of the calibration interval is 52 weeks. -The gas monitor has to be

replaced if the sensor sensitivity during the operation is reduced to less than 50% of the initial sensitivity.

- Checking the relay output function is accomplished by proof test every 1 year. And contact welding shall be check by the proof test.
- The relay contacts must be protected with a fuse rated 0.6 of the nominal specified relay contact current.
- It is necessary to use SELV / PELV DC switching power supply conforming to EN 60950 and EN 50178.

10.4 ROHS

Part Name	Hazardous Substances					
	Lead (Pb)	Mercury (Hg)	Cadmium (Cd)	Hexavalent Chromium (Cr(VI))	Polybrominated biphenyls (PBB)	Polybrominated diphenyl ethers (PBDE)
DF-8500 Gas Detector	×	○	○	○	○	×

O: Indicates that said hazardous substance contained in all of the homogeneous materials for this part is below the limit requirement of GB/T 26572.
X: Indicates that said hazardous substance contained in at least one of the homogeneous materials used for this part is above the limit requirement of GB/T 26572.

The Safety Company

www.MSAsafety.com

客户服务热线Customer Hotline: 4006-090-888

关注梅思安官方微信
更多信息等着您

梅思安(中国)安全设备有限公司
MSA(China)Safety Equipment Co.,Ltd
电话Tel：0512-62898880
传真Fax：0512-62952853

中国营销总部
China Headquarter of Marketing & Sales
电话Tel：021-62375878
传真Fax：021-62375876

产品技术不断改良
当前数据仅供参考

Product technology is continuously improved and current data is for reference only

P/N:10203355 Rev.2