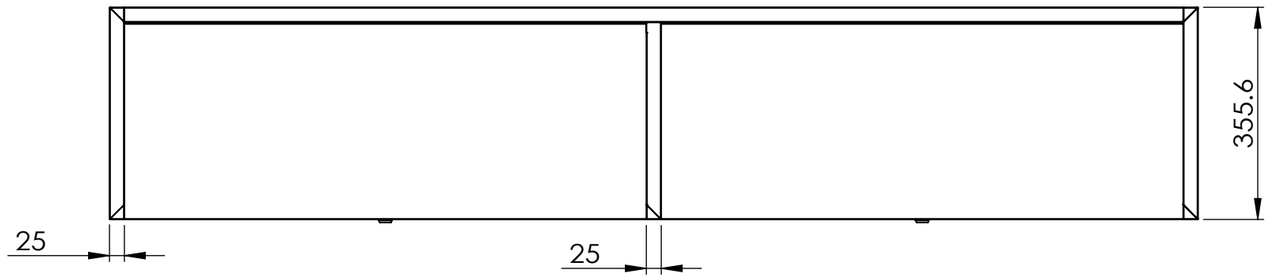

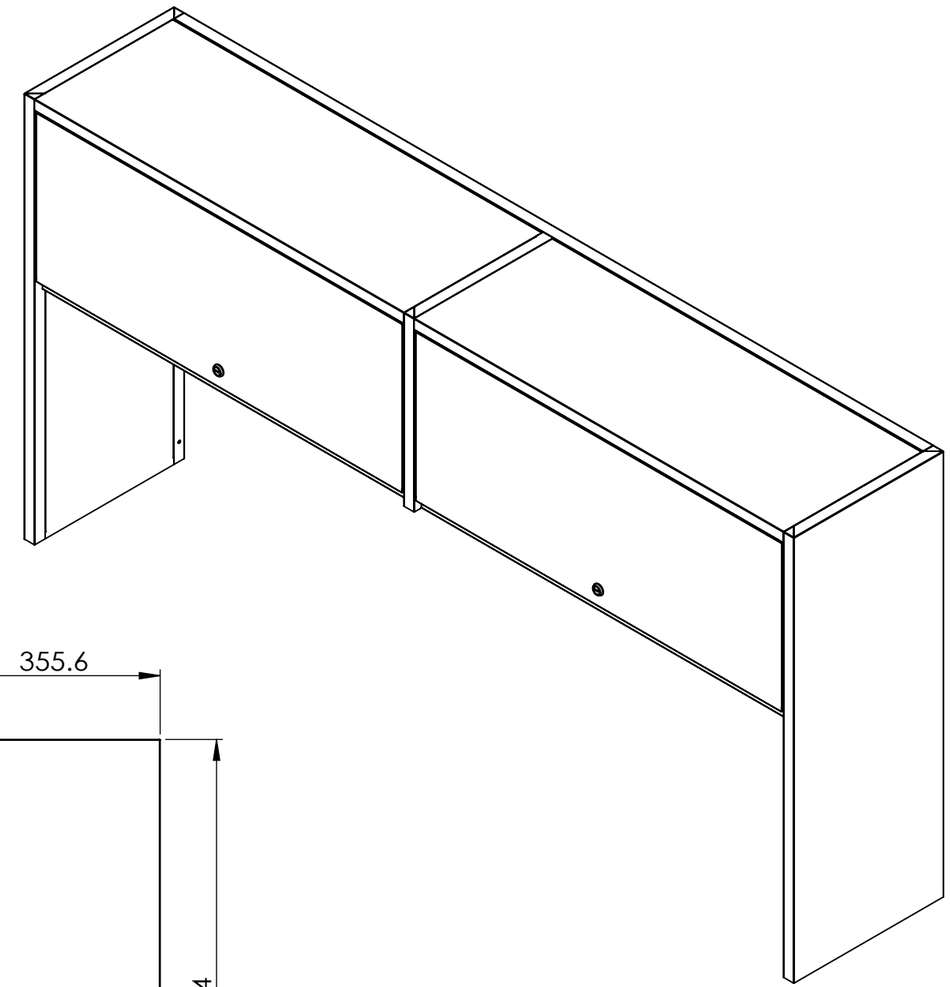

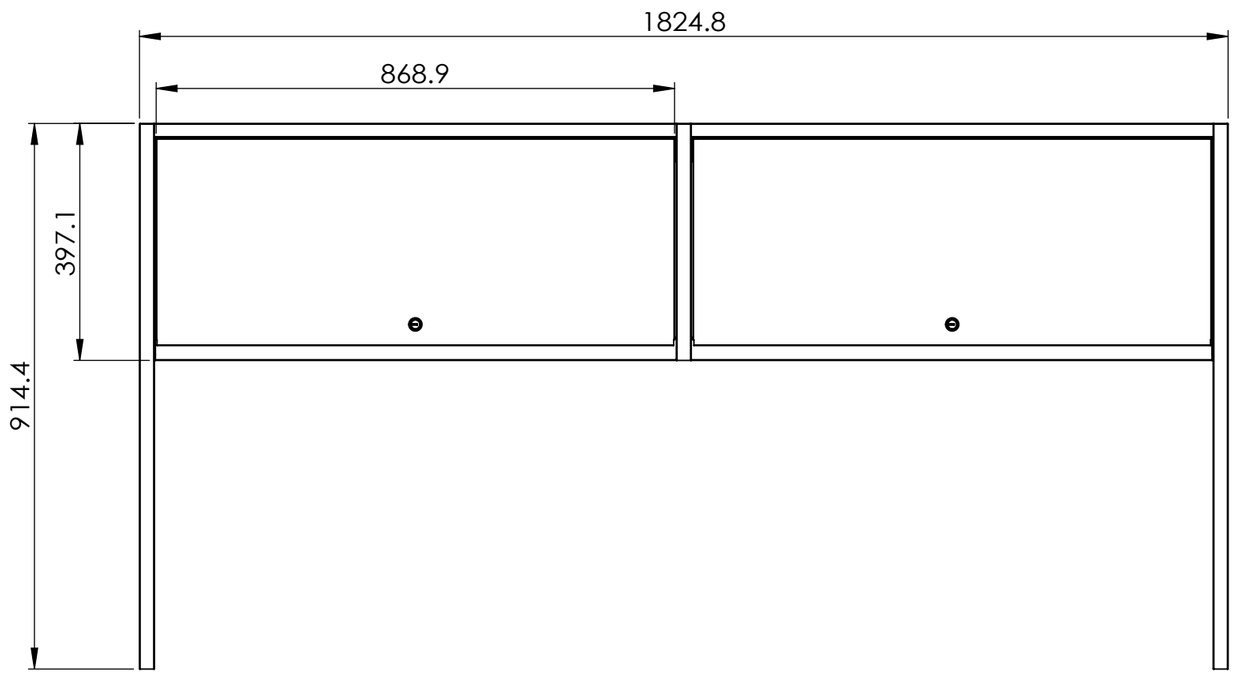

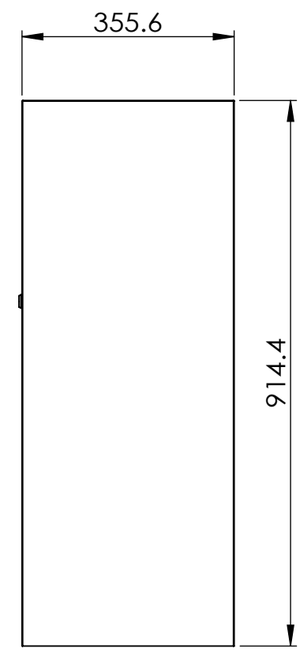

	NAME	DATE
DRAWN	Kennedy	2019/3/21
CHECKED		
ENG APPR.		
MFG APPR.		
Q.A.		

ANN YANG INC.

TEL:03-5688179
FAX:03-5689119

TITLE:

Hutch

MATERIAL

FINISH
POWDER COATING

DO NOT SCALE DRAWING

COMMENTS:
1. CHECK DIMENSIONS
2. REMOVE ALL SHARP EDGE & BURRS.

SIZE
B

DWG. NO.
AN106-001

SCALE: 1:10 | WEIGHT: | SHEET 1 OF 1