NAPA Tech TIPS

SUPPORTING TODAY'S PROFESSIONAL TECHNICIAN

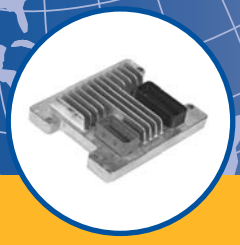

ECM'S RARELY FAIL BY THEMSELVES

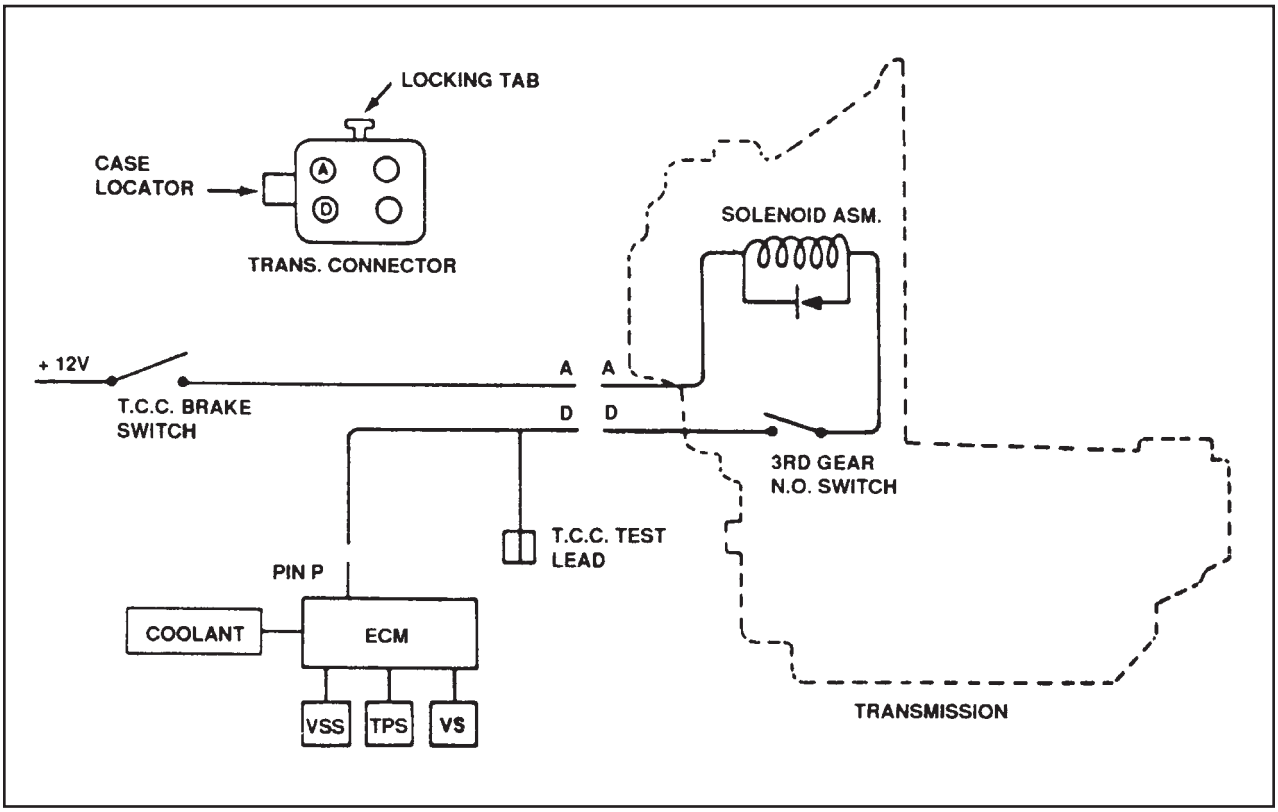

ECM failures are most likely caused by a shorted solenoid. The TCC solenoid is sometimes overlooked when testing. To check the TCC solenoid on most vehicles, you must first turn off the ignition, raise the drive wheels, disconnect the blue connect or and OHM the resistance at TCC connector terminal A & D. When the vehicle is hot and in high gear (3rd or 4th), the solenoid should measure over 20 OHMS (Please refer to your vehicles' service manual for specific solenoid value). If not, repair the TCC solenoid. When the solenoid measures over 20 OHMS, turn off the ignition, reconnect the connector and road test the vehicle.